REVISION HISTORY			
REV	DESCRIPTION	DATE	APPROVAL
A	REVISED AND PARTIALLY REDRAWN BY M. BEUSTER. (2) ITEM ADDED.	2004-04-26	R A VOTAW

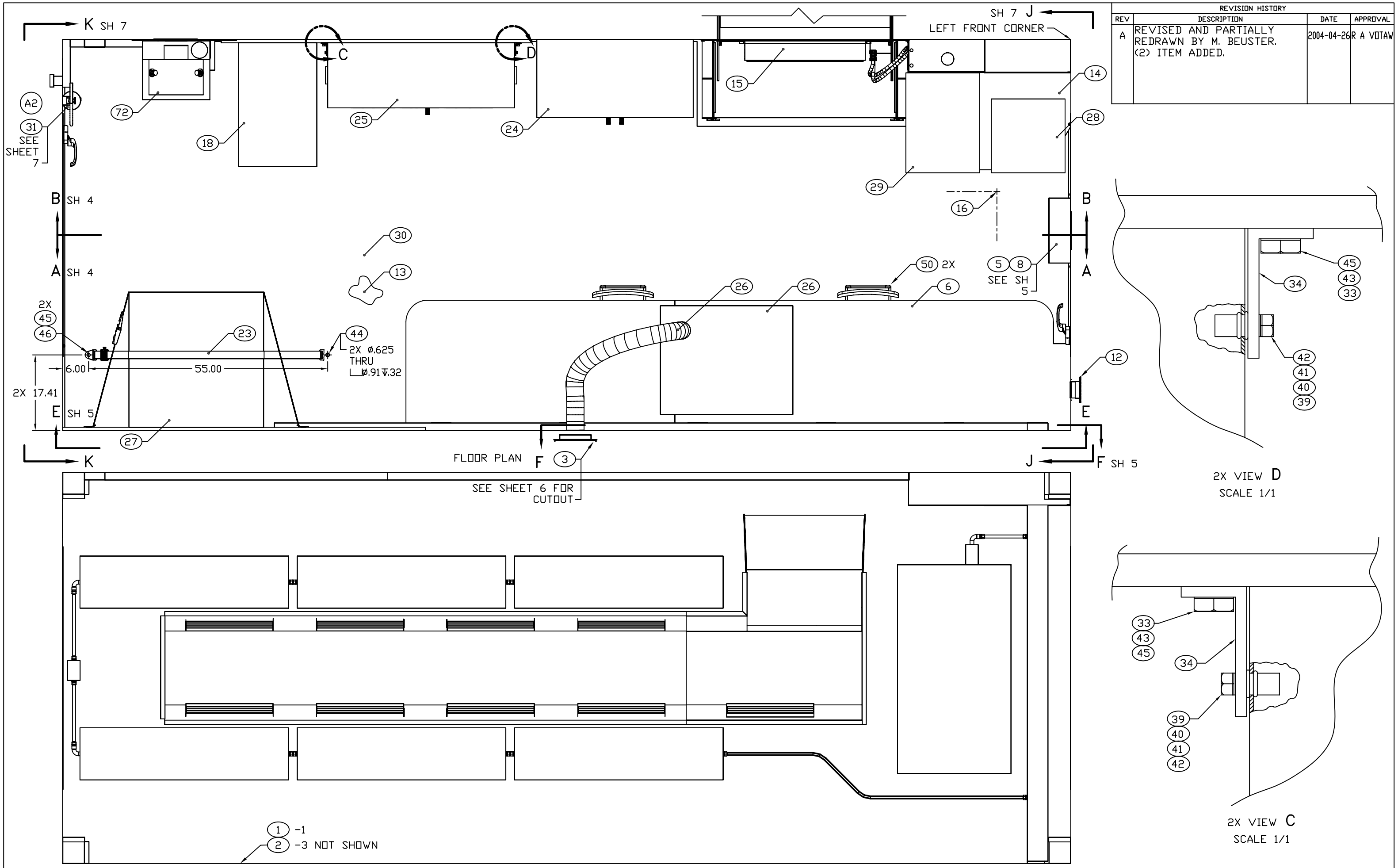

CEILING PLAN

ENGINEER	DATE	DRAWER	DATE	SIZE	CAGE CODE	DRAWING NUMBER	REV
M BEUSTER	2004-04-07	MAB	2004-04-07	D	91145	MFSP040101	A
NEXT ASSEMBLY		CHECKER		SCALE 1/10		SHEET 3	
FINAL		TN	2004-04-08				

REVISION HISTORY			
REV	DESCRIPTION	DATE	APPROVAL
B	REVISED AND PARTIALLY REDRAWN BY M. BEUSTER. (2) DIMENSION CHANGED.	2004-05-25	R A VOTAW

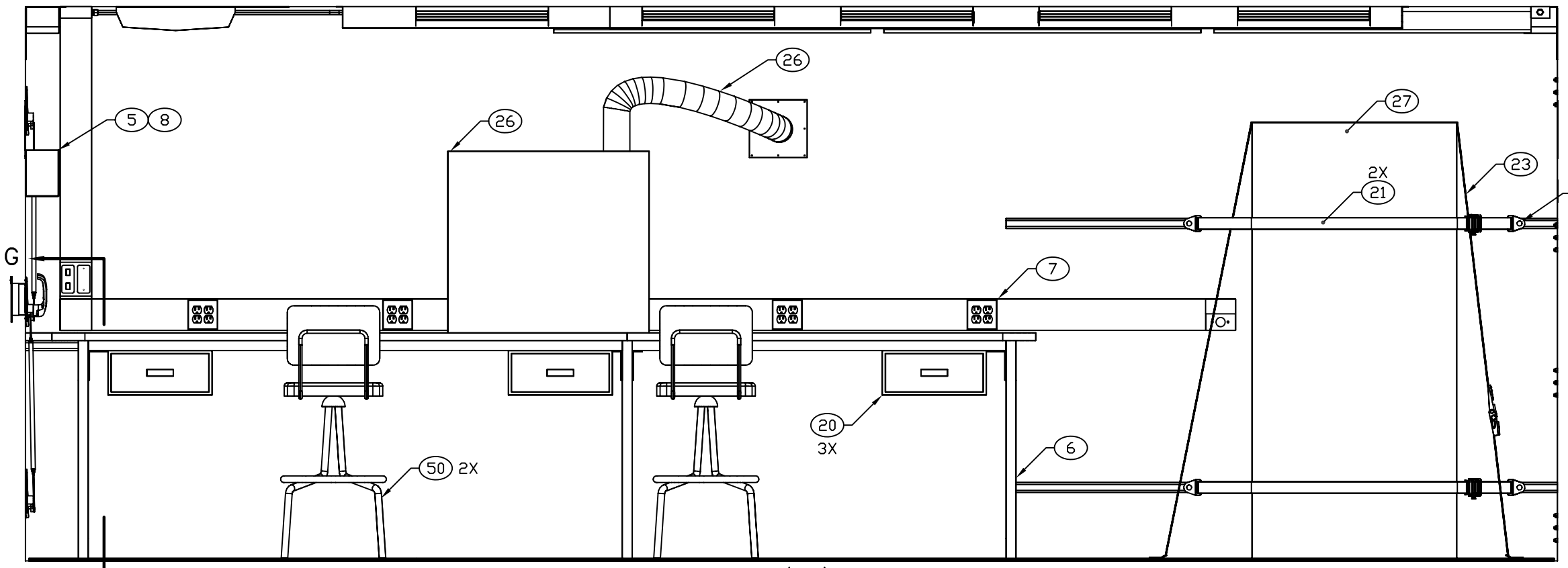

SECTION A–A SH 3
ROTATED 180°

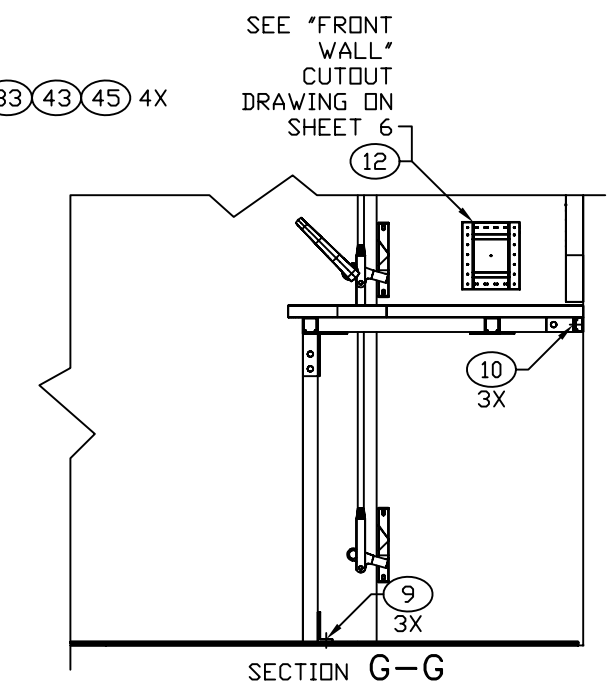

SECTION G–G

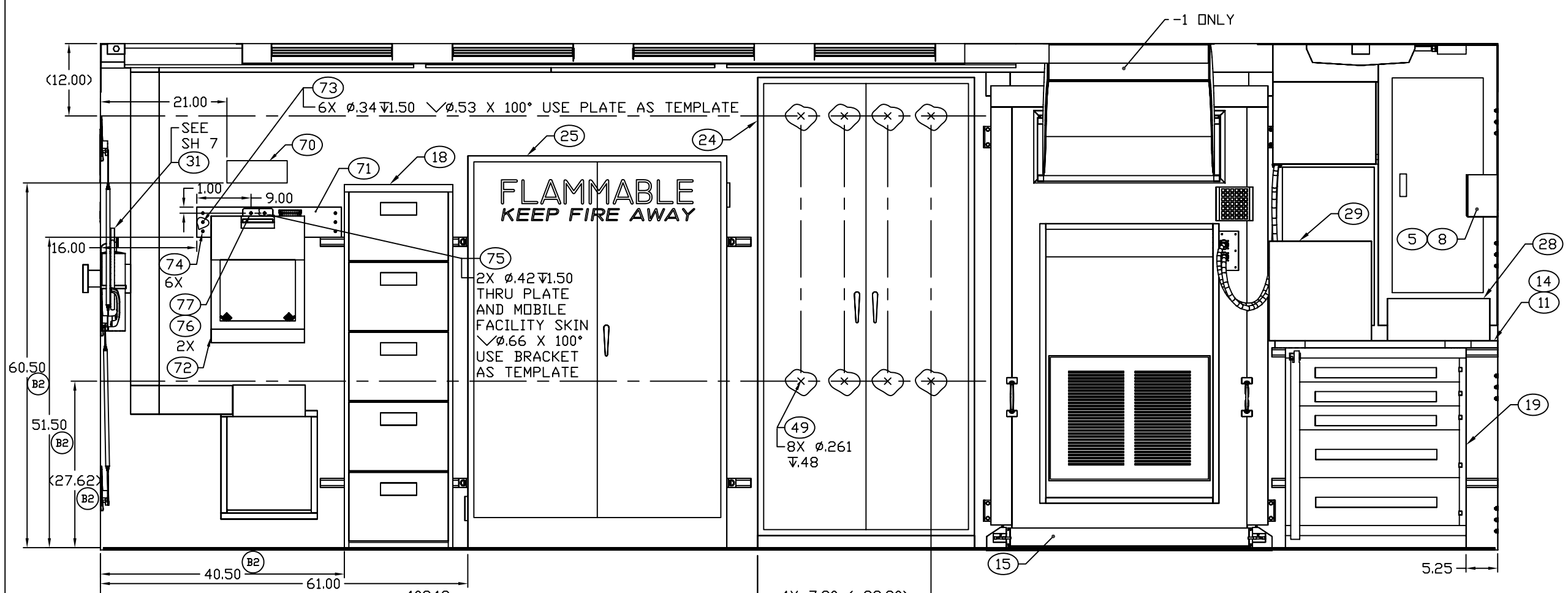

SECTION B–B SH 3

ENGINEER	DATE	DRAWER	DATE	SIZE	CAGE CODE	DRAWING NUMBER	REV
M BEUSTER	2004-04-07	MAB	2004-04-07	D	91145	MFSP040101	B
NEXT ASSEMBLY		CHECKER		SCALE		SHEET	
FINAL		TN	2004-04-08	1/10		4	