REVISION HISTORY			
REV	DESCRIPTION	DATE	APPROVAL
B	REVISED AND REDRAWN BY T H NGUYEN.	04-07-28	R A VOTAW

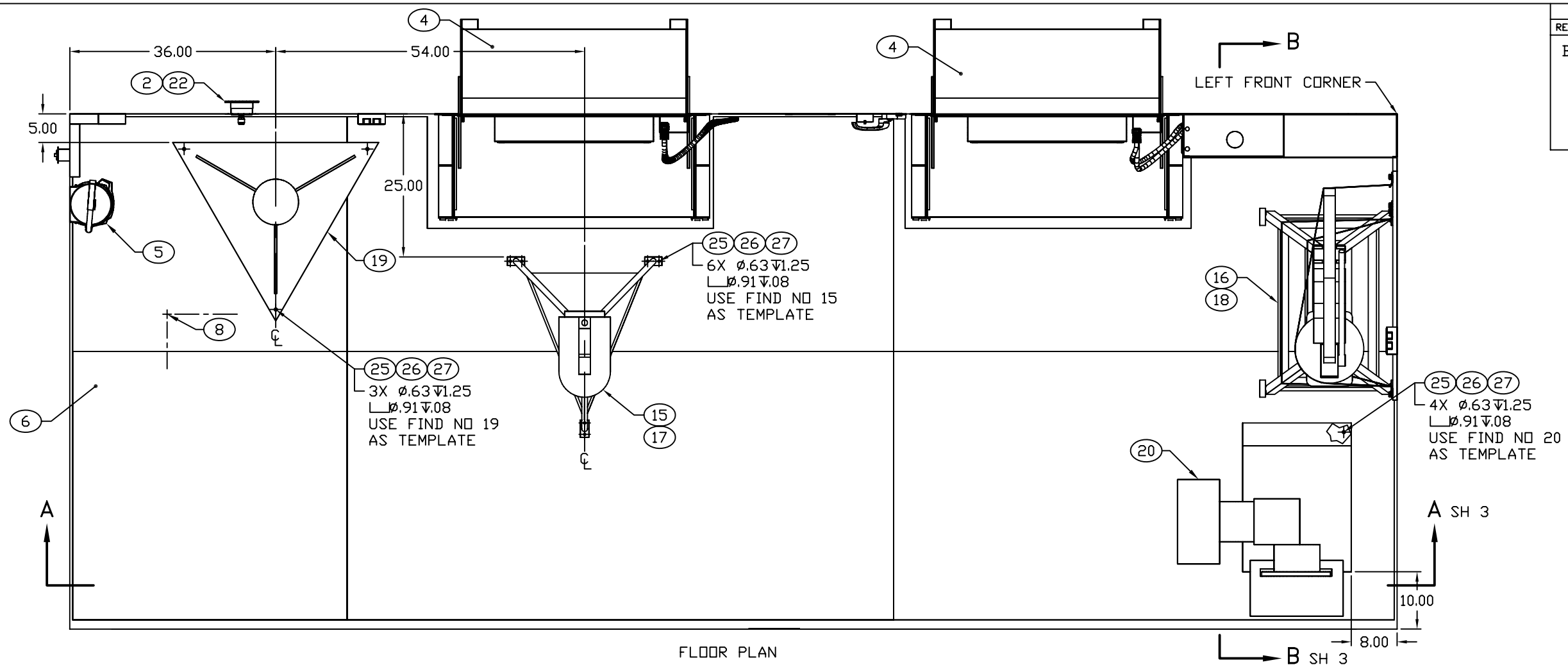

FLOOR PLAN

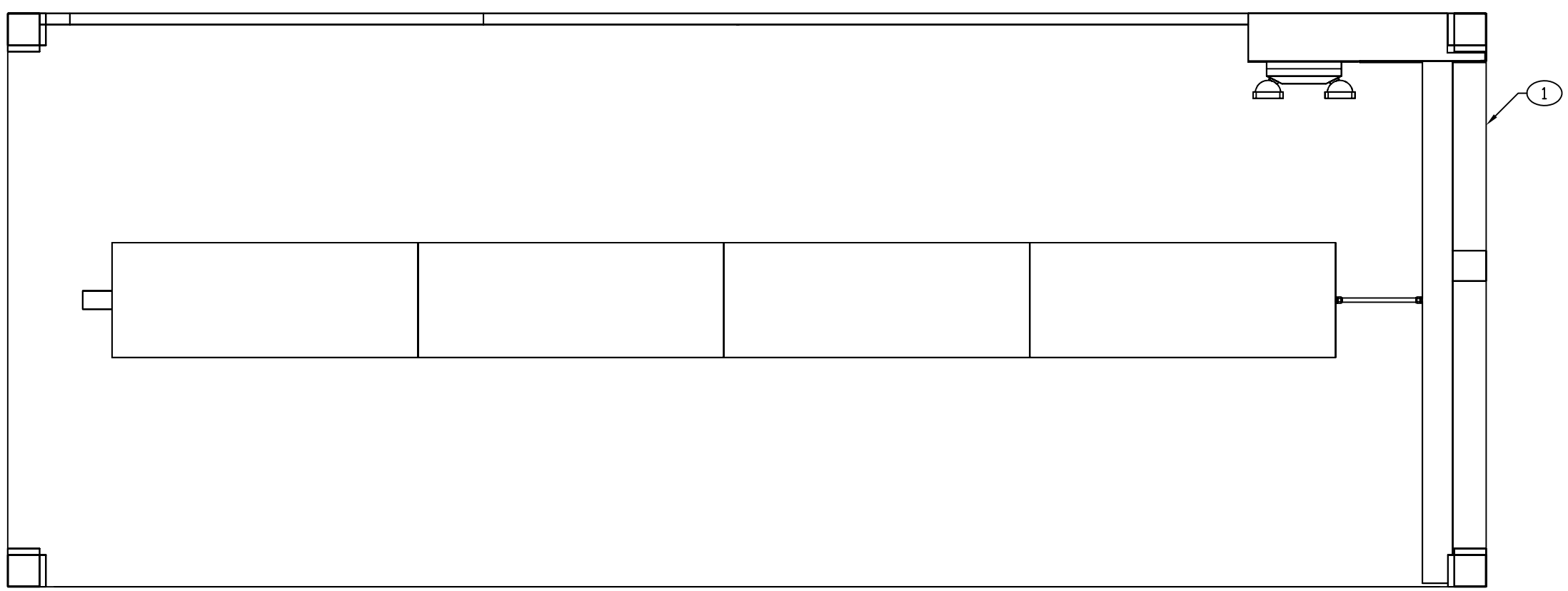

CEILING PLAN

ENGINEER	DATE	DRAWER	DATE	SIZE	CAGE CODE	DRAWING NUMBER	REV
KIMBEL	86-12-11	SA	87-04-24	D	91145	MFSM060201	B
NEXT ASSEMBLY		CHECKER		SCALE		SHEET	
FINAL		RGJ	87-06-23	1/11		2	

REVISION HISTORY			
REV	DESCRIPTION	DATE	APPROVAL
B	REVISED AND REDRAWN BY T H NGUYEN.	04-07-28	R A VOTAW

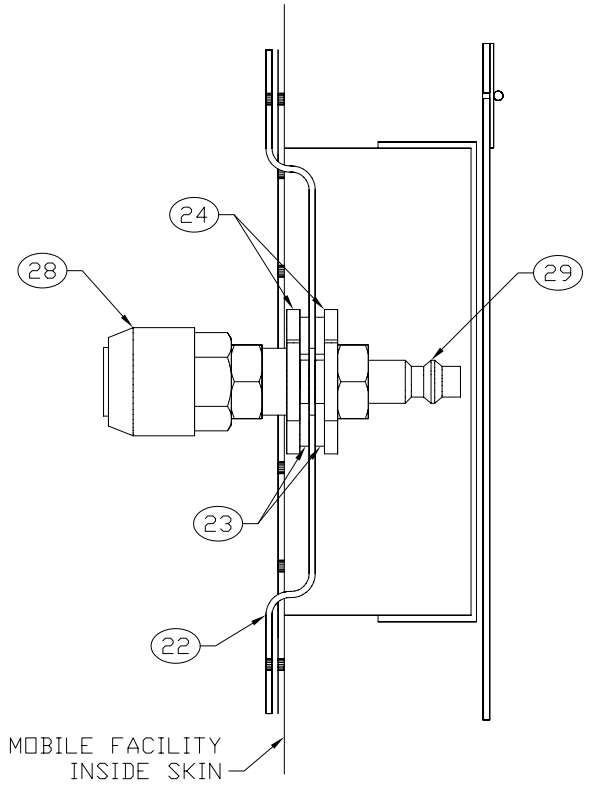

SECTION C–C
SCALE 1/1

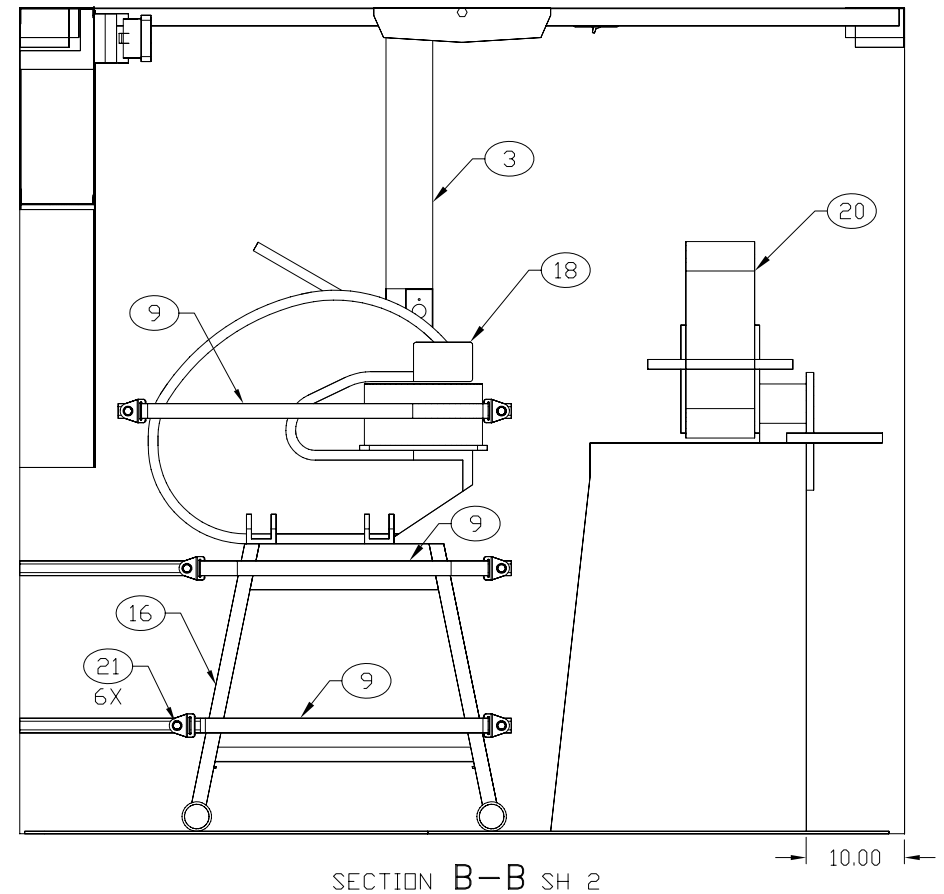

SECTION B–B SH 2
ROTATED 90° CCW

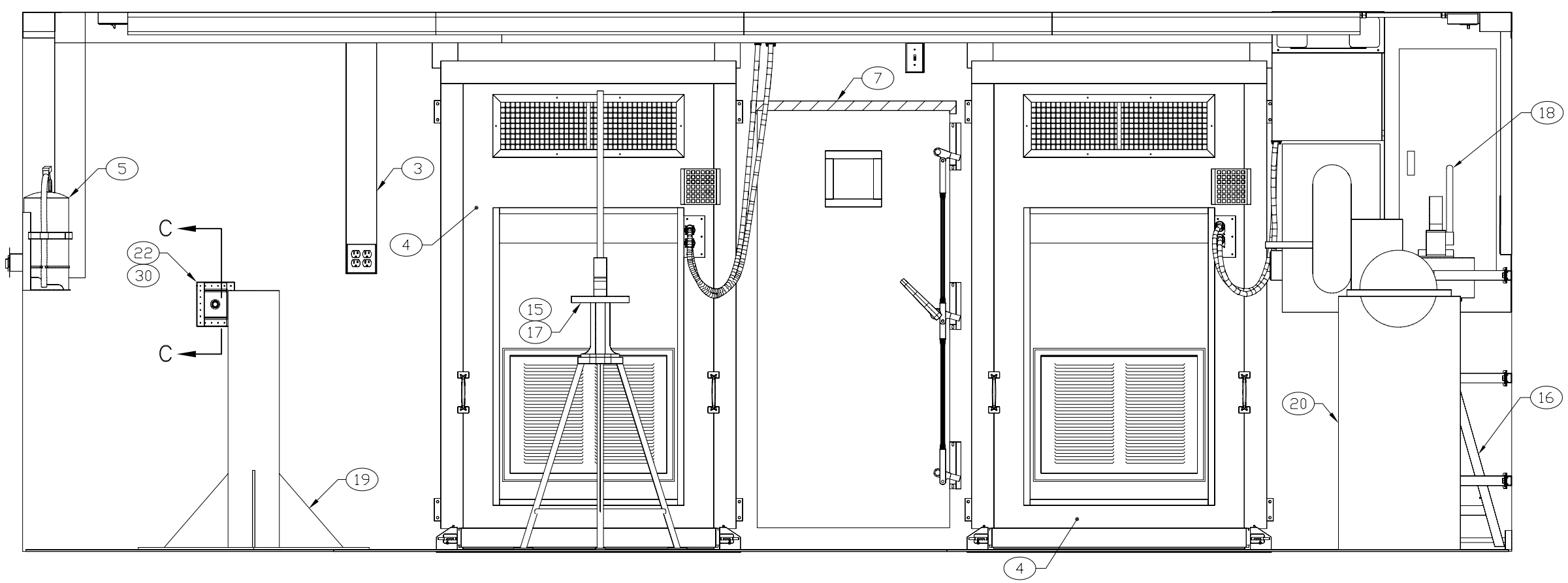

SECTION A–A SH 2
DIMPLING MACHINE PARTIALLY SHOWN

ENGINEER	DATE	DRAWER	DATE	SIZE	CAGE CODE	DRAWING NUMBER	REV
KIMBEL	86-12-11	SA	87-04-24	D	91145	MFSM060201	B
NEXT ASSEMBLY		CHECKER		SCALE		SHEET	
FINAL		RGJ	87-06-23	1/10		3	