REVISION HISTORY			
REV	DESCRIPTION	DATE	APPROVAL
B	REVISED AND REDRAWN BY M. BEUSTER.	2004-07-26	R A VOTAW

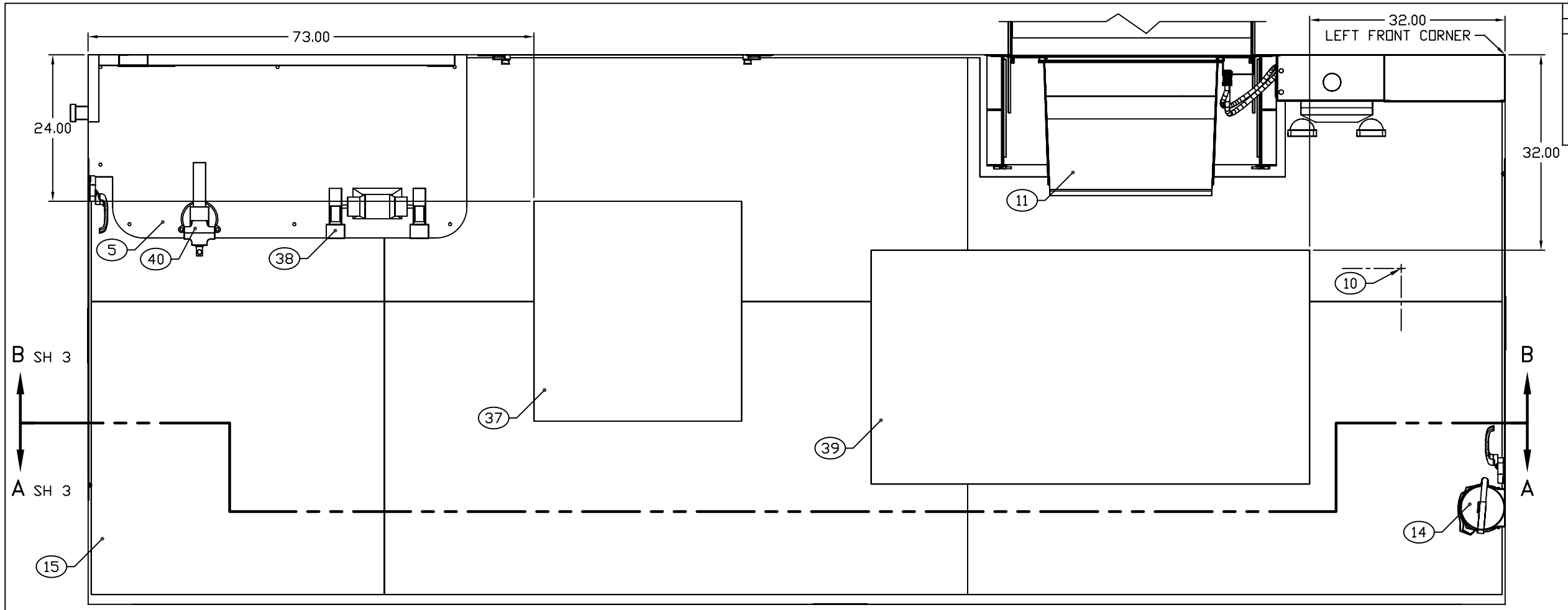

FLOOR PLAN

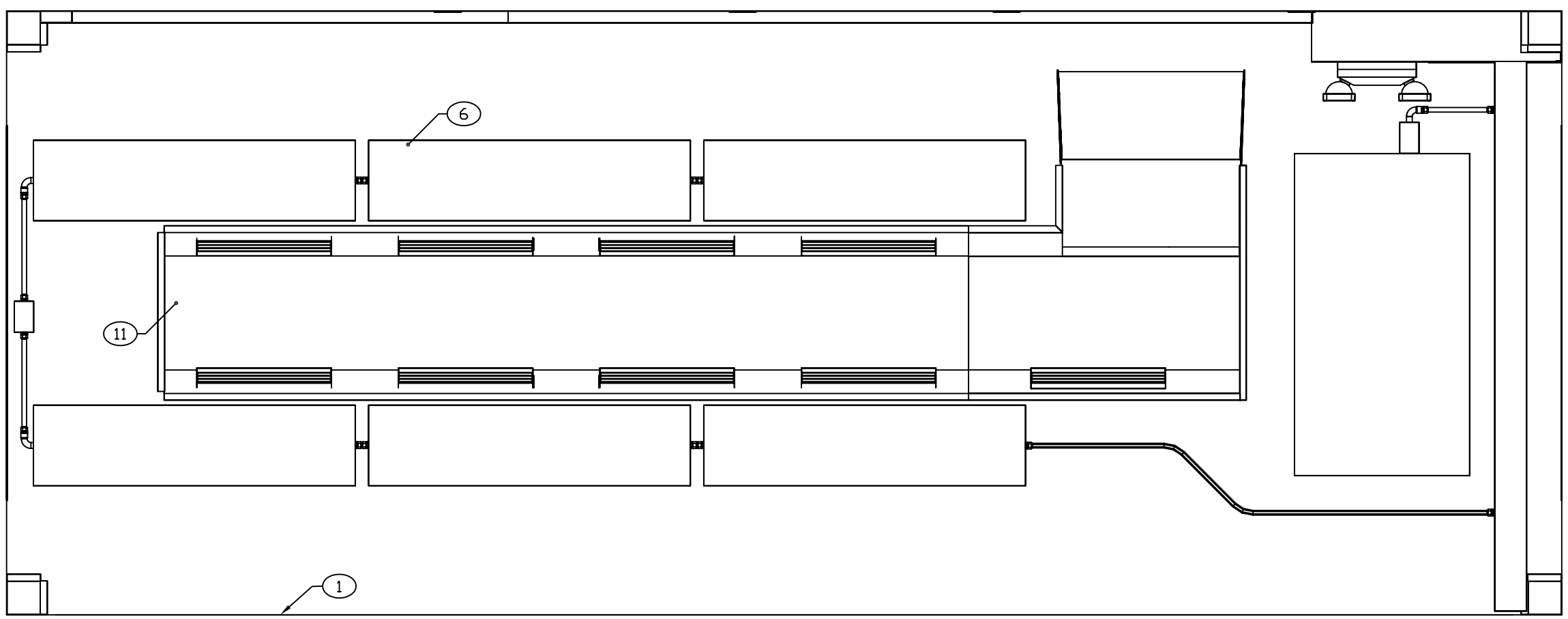

CEILING PLAN

ENGINEER	DATE	DRAWER	DATE	SIZE	CAGE CODE	DRAWING NUMBER	REV
KIMBEL	1986-01-24	S AGUILAR	1987-04-14	D	91145	MFSM050201	B
NEXT ASSEMBLY		CHECKER		SCALE		SHEET	
FINAL		M BAUSCHKA	1987-06-02	1/10		2	

REVISION HISTORY			
REV	DESCRIPTION	DATE	APPROVAL
B	REVISED AND REDRAWN BY M. BEUSTER.	2004-07-26	R A VOTAW

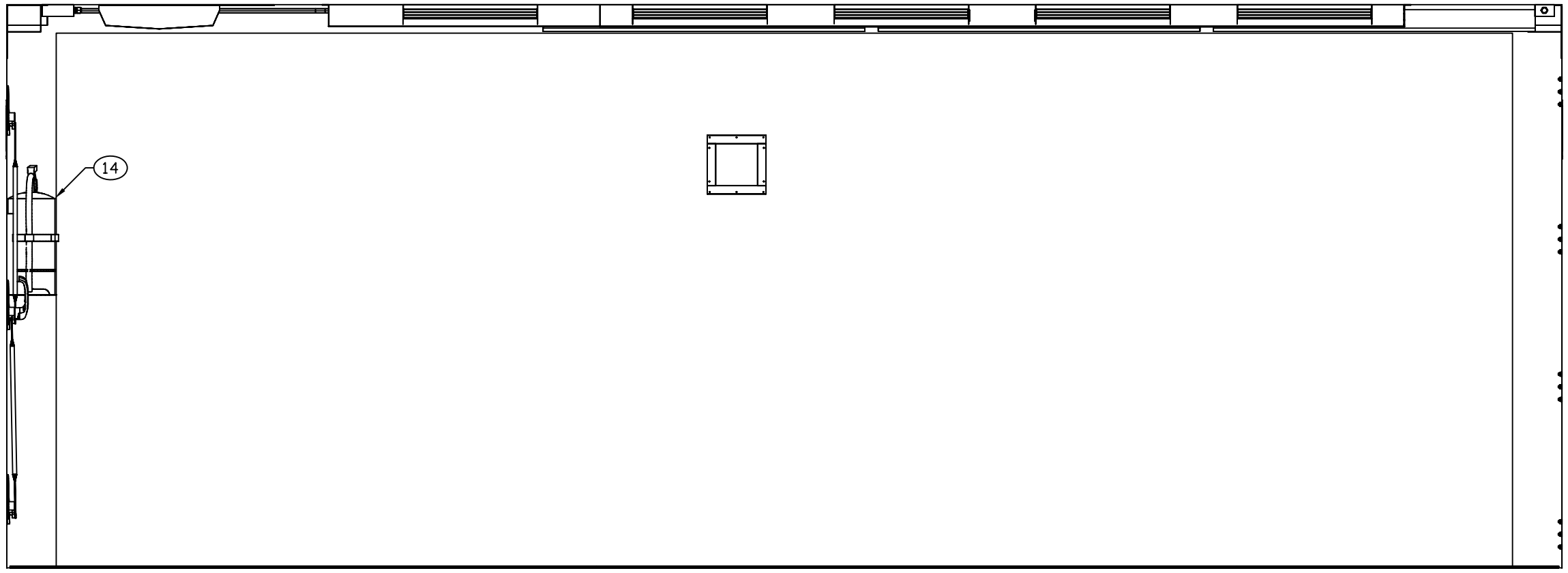

SECTION A–A SH 2
ROTATED 180°

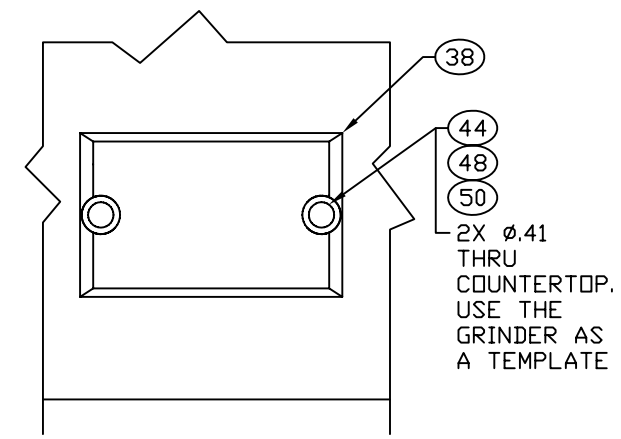

SECTION D–D
SCALE 1/3

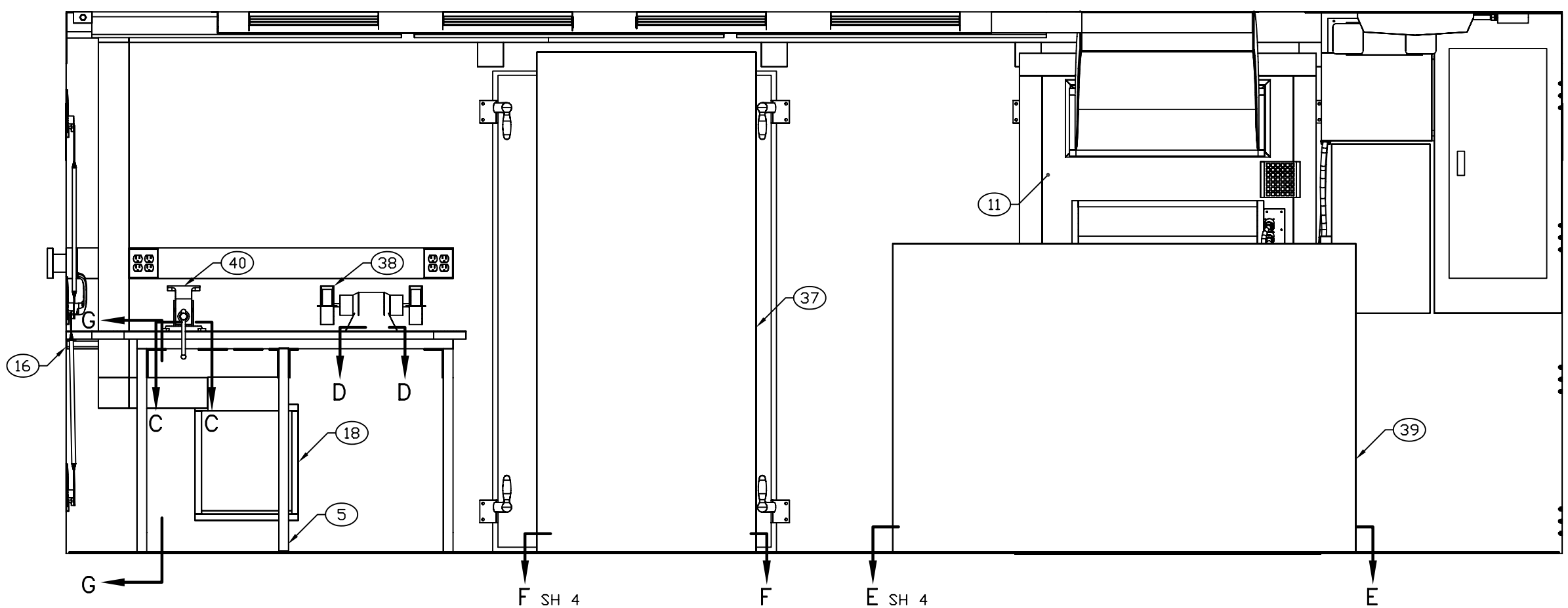

SECTION B–B SH 2

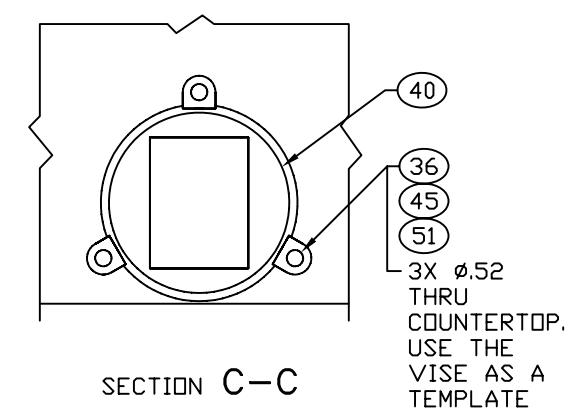

SECTION C–C
SCALE 1/3

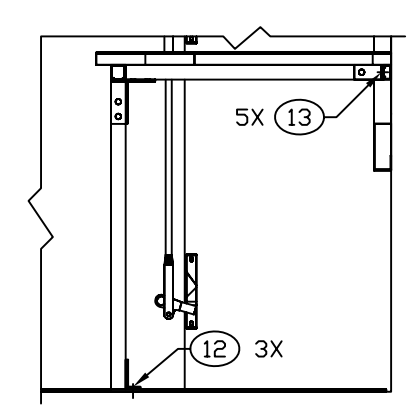

SECTION G–G

ENGINEER	DATE	DRAWER	DATE	SIZE	CAGE CODE	DRAWING NUMBER	REV
KIMBEL	1986-01-24	S AGUILAR	1987-04-14	D	91145	MFSM050201	B
NEXT ASSEMBLY		CHECKER		SCALE		SHEET	
FINAL		M BAUSCHKA	1987-06-02	1/10		3	