REVISION HISTORY			
REV	DESCRIPTION	DATE	APPROVAL
A	(3) QUANTITY CHANGED. (6) DIMENSION CHANGED. (7) NOTE DELETED.	01-06-18	R VOTAW
B	(1) ITEM ADDED. (2) QUANTITY CHANGED. (5) ITEM RELOCATED. (6) DIMENSION CHANGED. (7) NOTE ADDED.	01-06-18	L BJURMAN

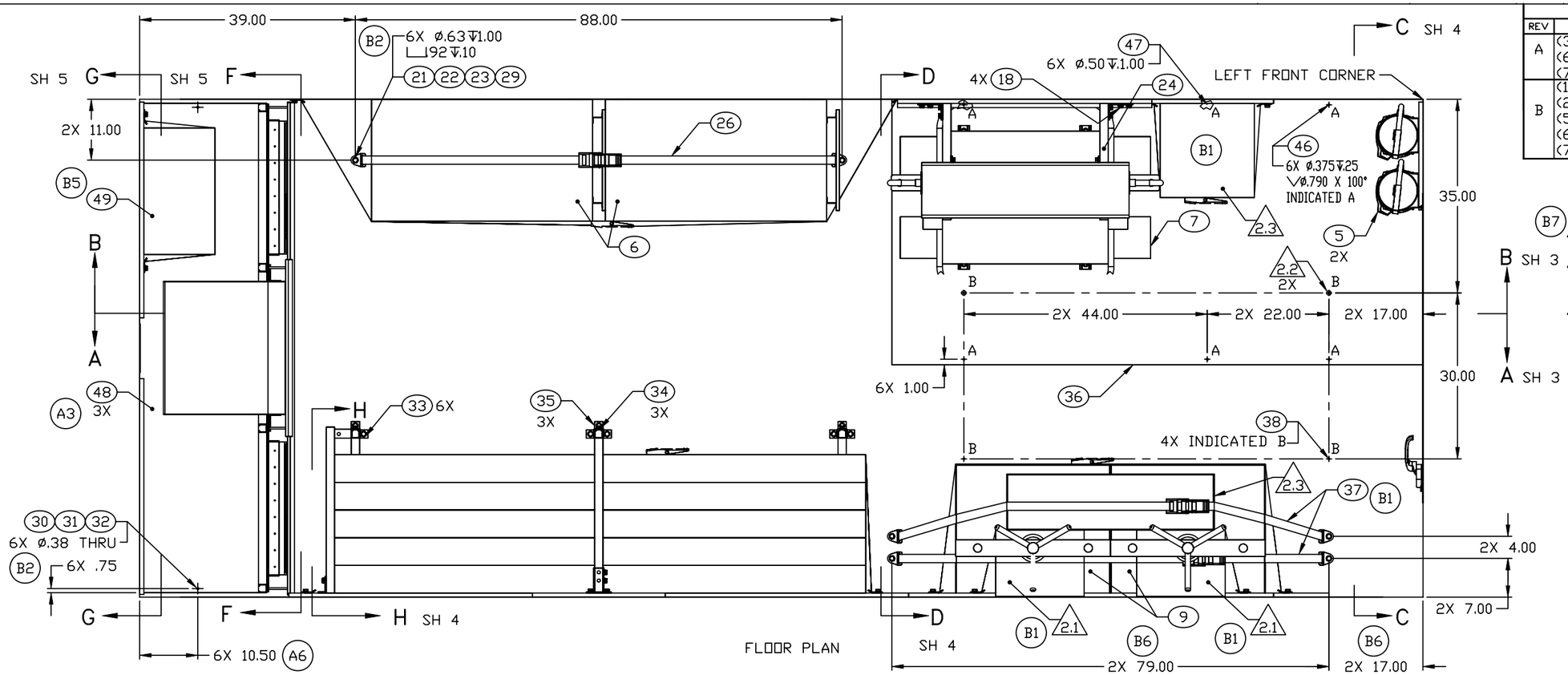

NOTES:

(B7) 2.1 THIS ITEM IS PART NO FIND NO 9.

2.2 ø.75 THRU FLOOR PLATE TO ALLOW ACCESS TO TIE DOWN FITTING ASSY.

2.3 THIS ITEM IS PART OF FIND NO 7.

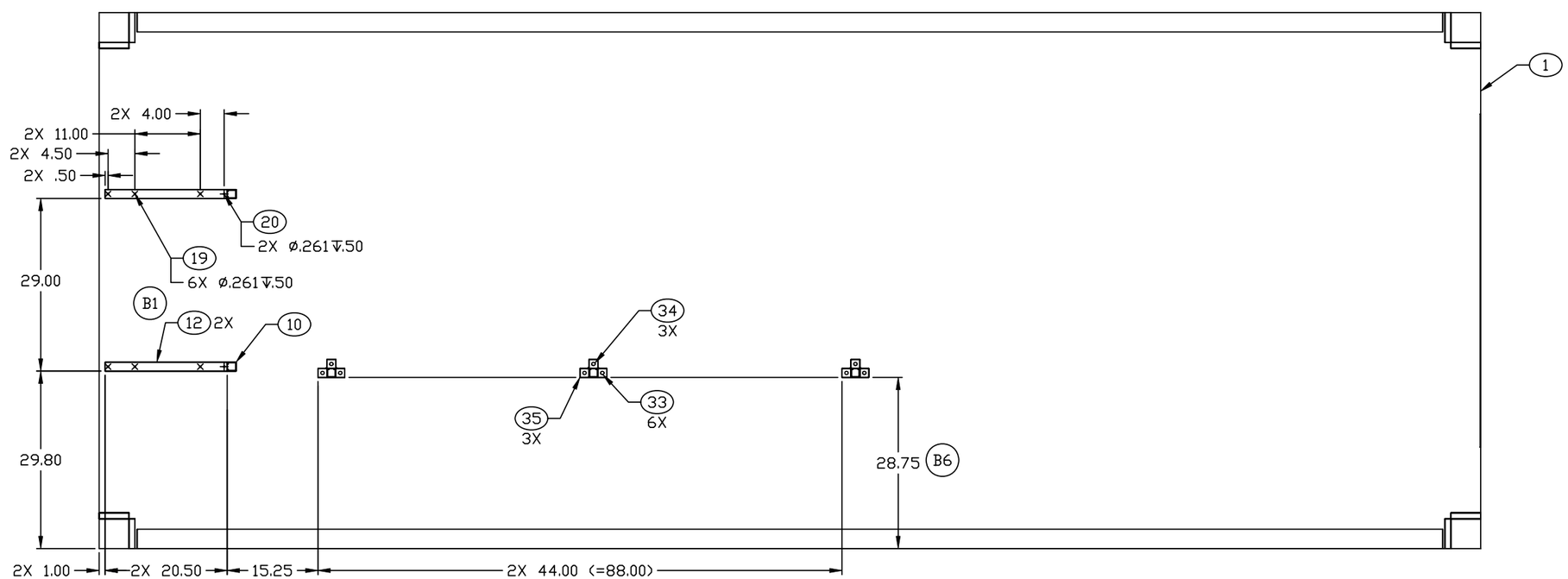

CEILING PLAN

ENGINEER	DATE	DRAWER	DATE	SIZE	CAGE CODE	DRAWING NUMBER	REV
T NGUYEN	01-03-20	TN	01-06-14	D	91145	MFSE060101	B
NEXT ASSEMBLY		CHECKER		SCALE		SHEET	
FINAL		MAB	01-03-21	1/11		2	

REVISION HISTORY			
REV	DESCRIPTION	DATE	APPROVAL
A	(1) ITEM ADDED. (6) DIMENSION CHANGED. (8) FIND NO CHANGED.	01-06-18	R VOTAW
B	(1) ITEM ADDED (2) QUANTITY CHANGED. (8) FIND NO CHANGED.	01-06-25	L BJURMAN

NOTES:

3.1 THIS ITEM IS PART OF FIND NO 9.

3.2 THIS ITEM IS PART OF FIND NO 7.

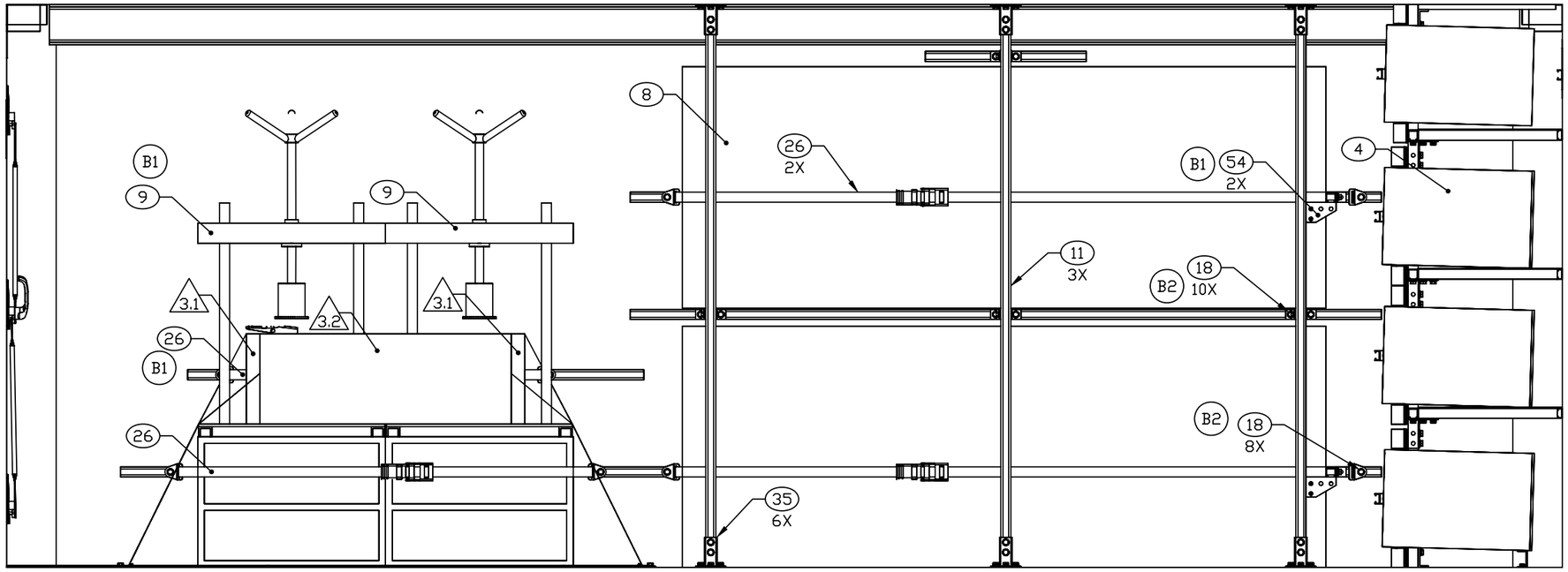

SECTION A–A SH 2
ROTATED 180°

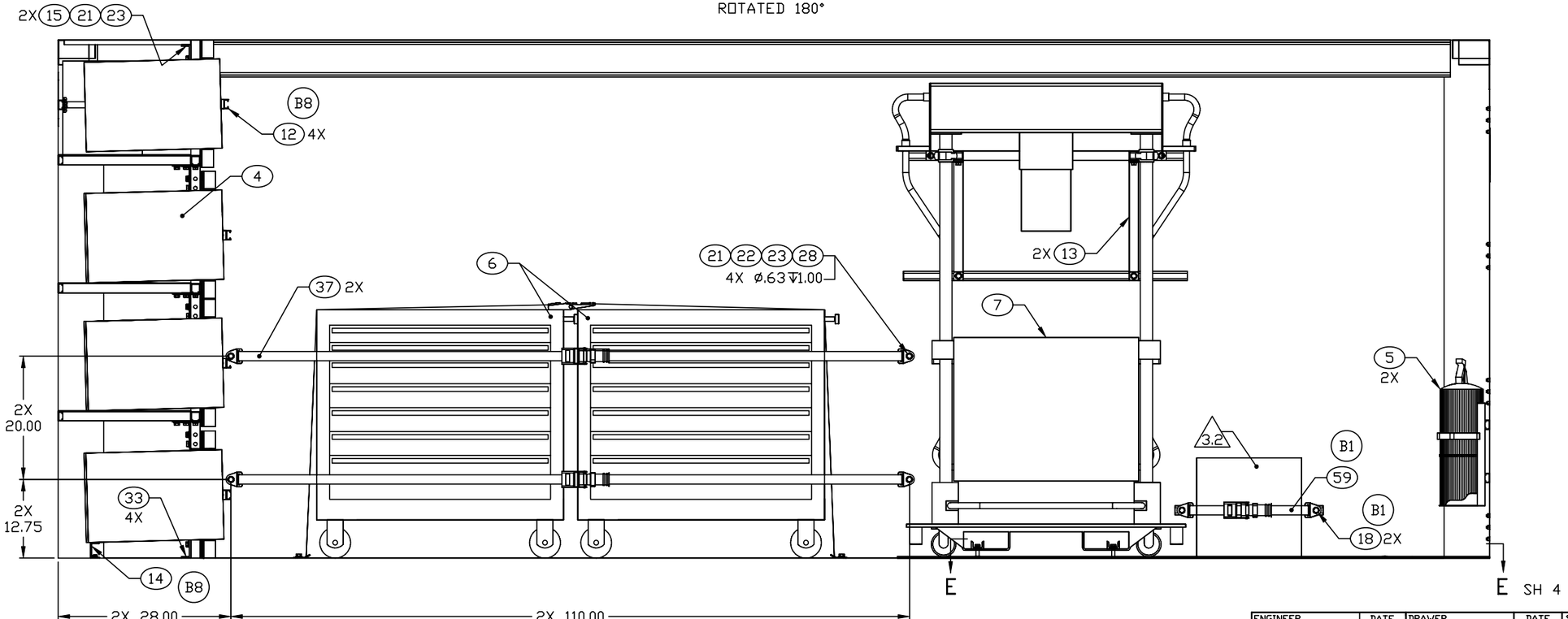

SECTION B–B SH 2

ENGINEER	DATE	DRAWER	DATE	SIZE	CAGE CODE	DRAWING NUMBER	REV
T NGUYEN	01-03-20	TN	01-06-23	D	91145	MFSE060101	B
NEXT ASSEMBLY		CHECKER		SCALE		SHEET	
FINAL		MAB	01-03-21	1/10		3	