REVISIONS			
REV	DESCRIPTION	DATE	APPROVAL

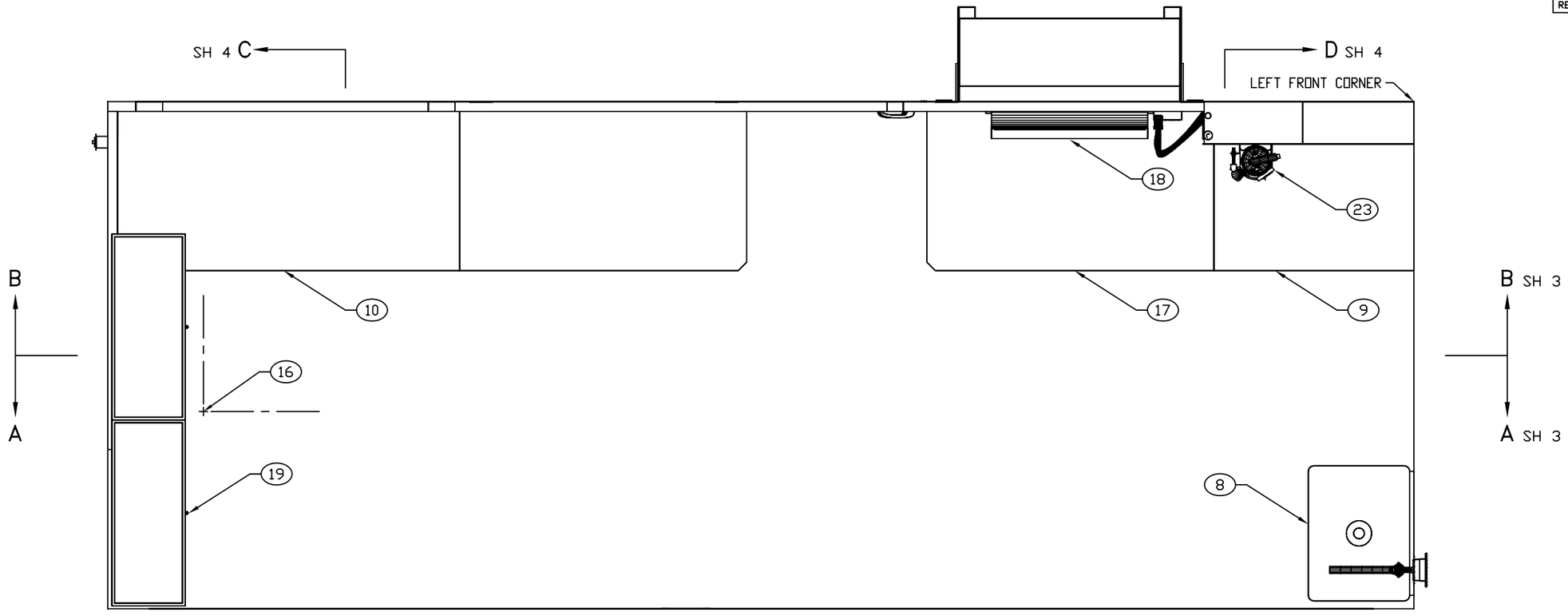

FLOOR PLAN

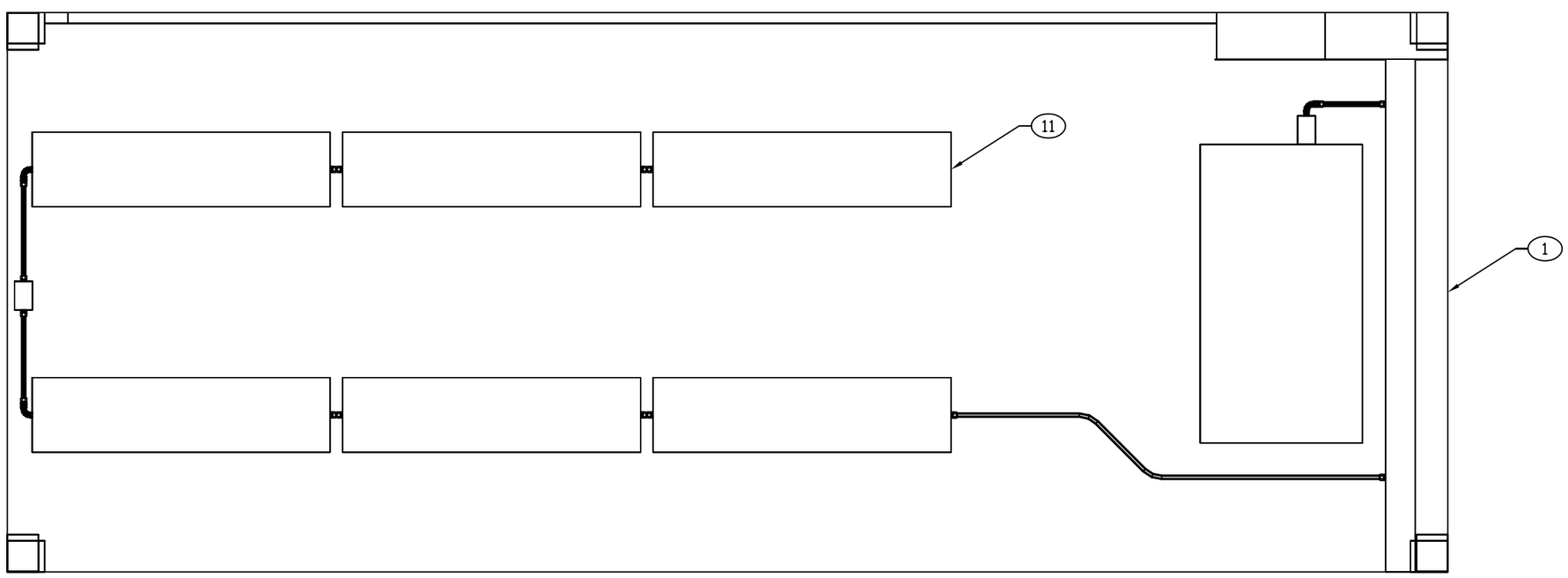

CEILING PLAN

ENGINEER	DATE	DRAWER	DATE	SIZE	CAGE CODE	DRAWING NUMBER	REV
M. A. BEUSTER	95-03-28	MAB	95-03-28	D	91145	MFSE040101	–
NEXT ASSEMBLY		CHECKER		SCALE 1/11		SHEET 2	
FINAL							

SE04101.RV–

REVISIONS			
REV	DESCRIPTION	DATE	APPROVAL

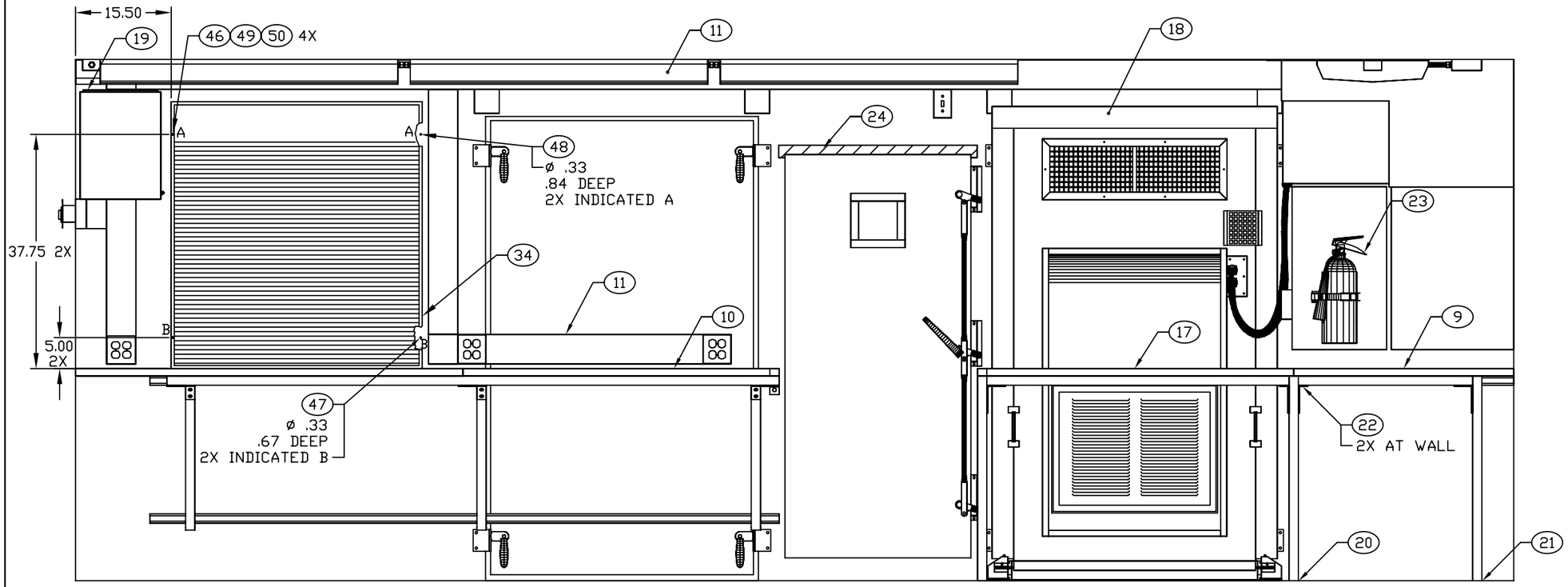

SECTION B–B SH 2

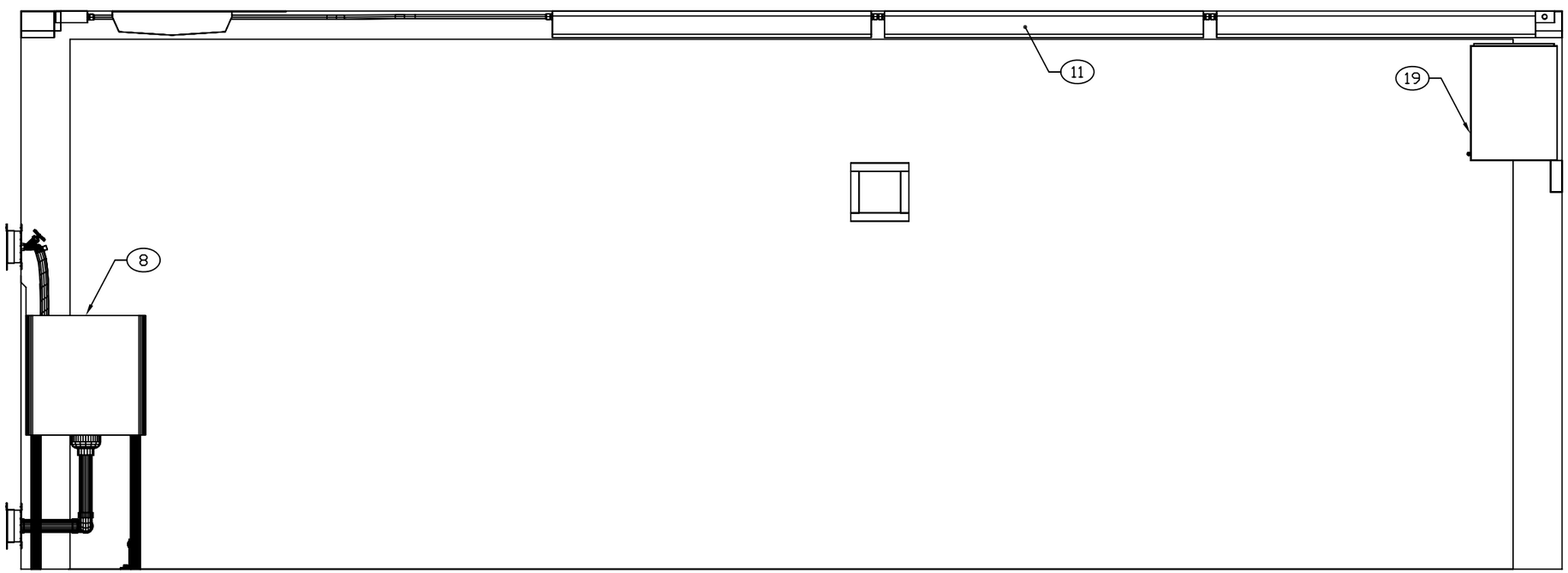

SECTION A–A SH 2
ROTATED 180°

ENGINEER	DATE	DRAWER	DATE	SIZE	CAGE CODE	DRAWING NUMBER	REV
M. A. BEUSTER	95-03-28	MAB	95-03-28	D	91145	MFSE040101	–
NEXT ASSEMBLY		CHECKER		SCALE 1/10		SHEET 3	
FINAL							

SE04101.RV–

REVISIONS			
REV	DESCRIPTION	DATE	APPROVAL

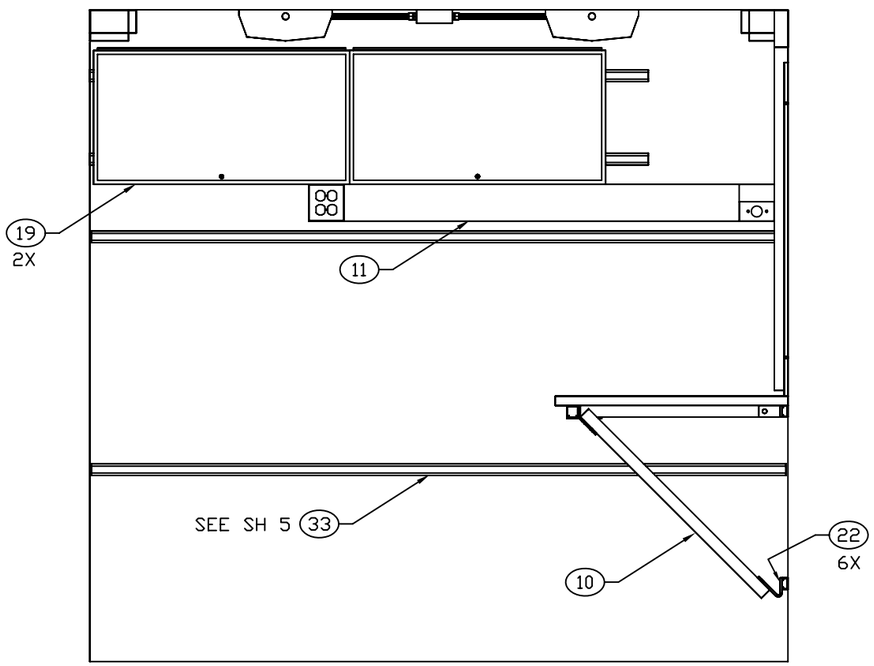

SECTION C–C SH 2
ROTATED 90° CW

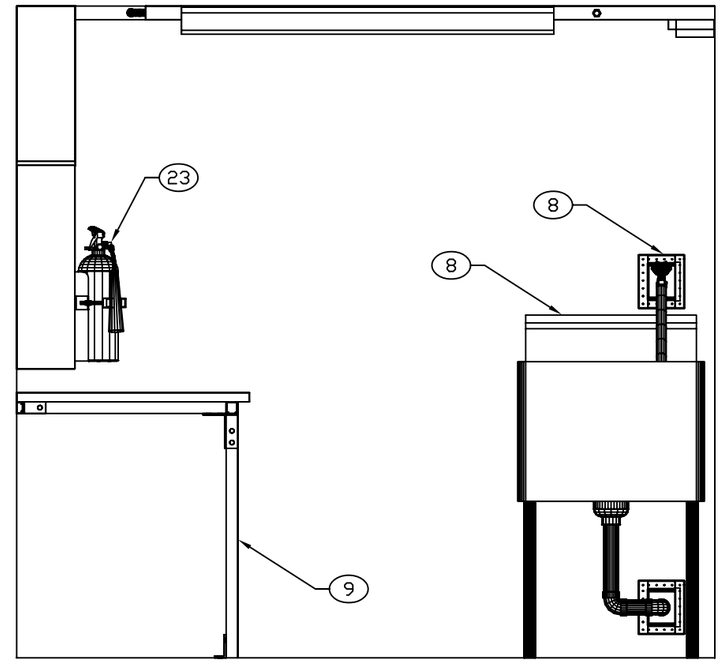

SECTION D–D SH 2
ROTATED 90° CCW

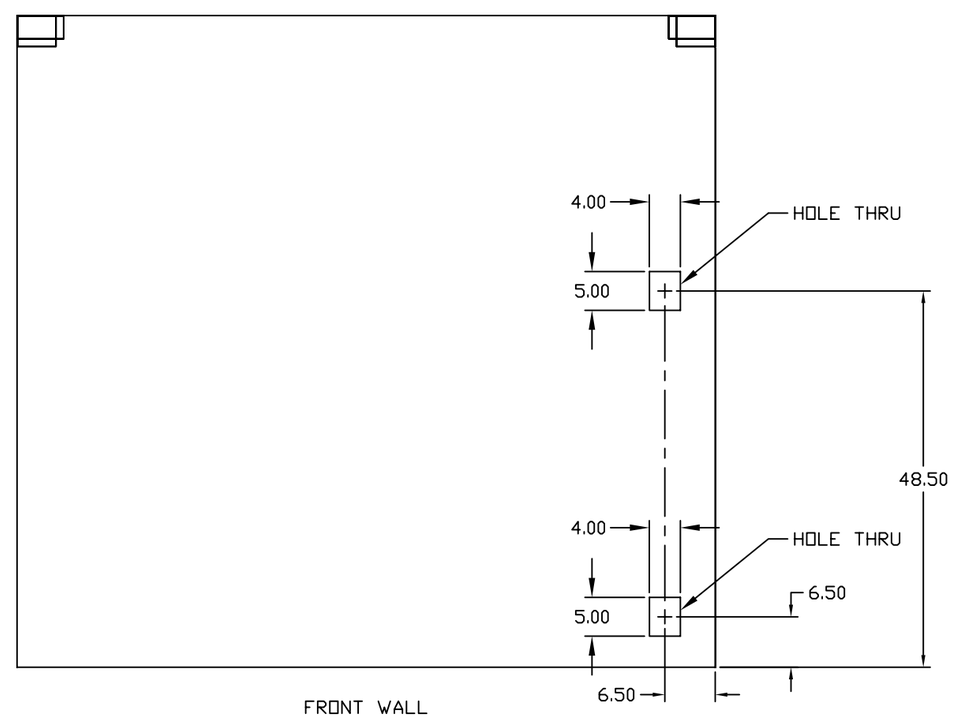

FRONT WALL
CUTOUTS

ENGINEER	DATE	DRAWER	DATE	SIZE	CAGE CODE	DRAWING NUMBER	REV
M. A. BEUSTER	95-03-28	MAB	95-03-28	D	91145	MF SE040101	–
NEXT ASSEMBLY		CHECKER		SCALE 1/10		SHEET 4	
FINAL							

SE04101.RV–