REVISION HISTORY			
REV	DESCRIPTION	DATE	APPROVAL
A	REDRAWN BY BAE SYSTEMS. REVISED BY M. BEUSTER.	02-12-04	R A VOTAW

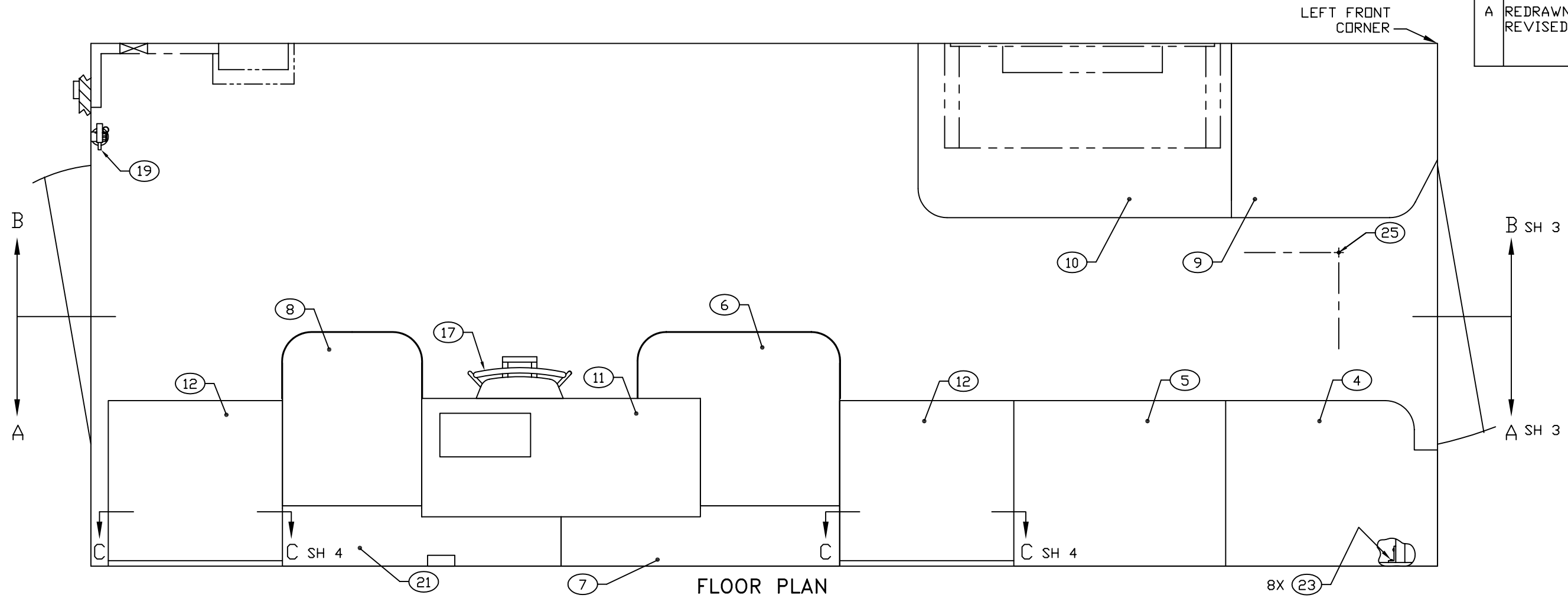

FLOOR PLAN

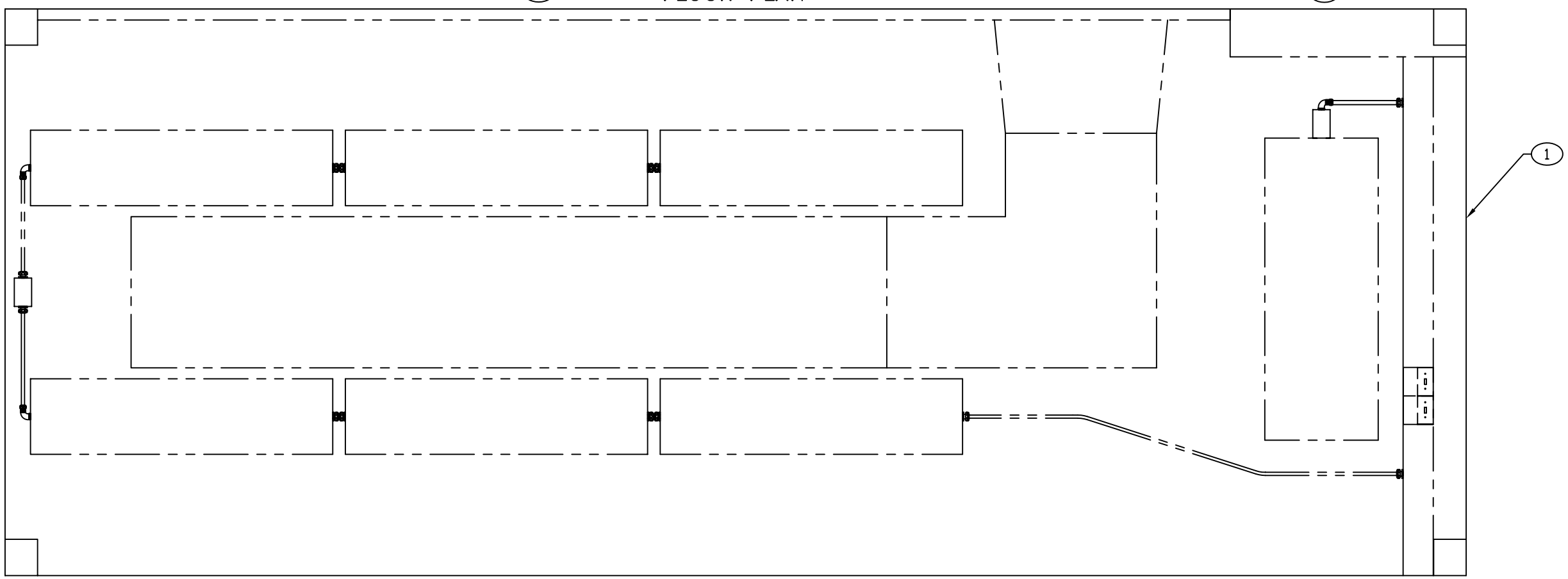

CEILING PLAN

ENGINEER	DATE	DRAWER	DATE	SIZE	CAGE CODE	DRAWING NUMBER	REV
P. PHAN	92-2-7	P. PHAN	92-2-7	D	91145	MFSE010401	A
NEXT ASSEMBLY		CHECKER		SCALE		SHEET	
FINAL		MAB	92-02-24	1/10		2	

REVISION HISTORY			
REV	DESCRIPTION	DATE	APPROVAL
B	REVISED AND PARTIALLY REDRAWN BY M. BEUSTER. (1) ITEM ADDED.	04-08-13	R A VOTAW

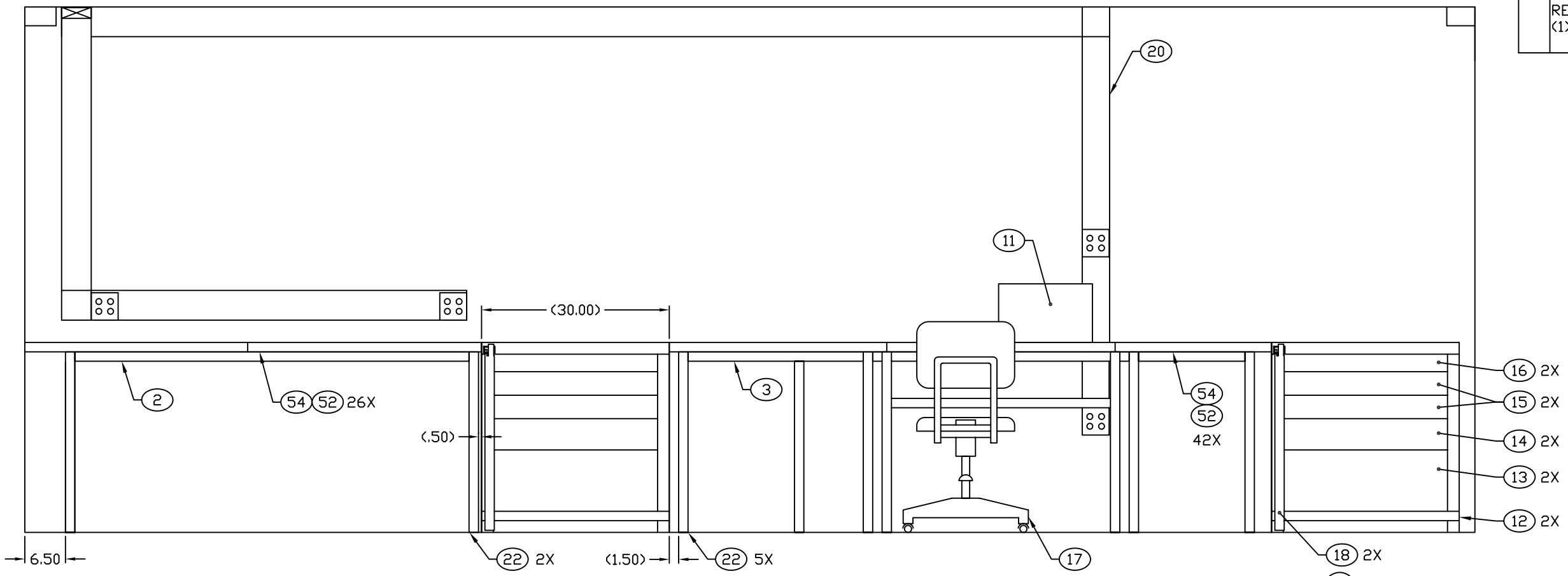

SECTION A-A SH 2
ROTATED 180°

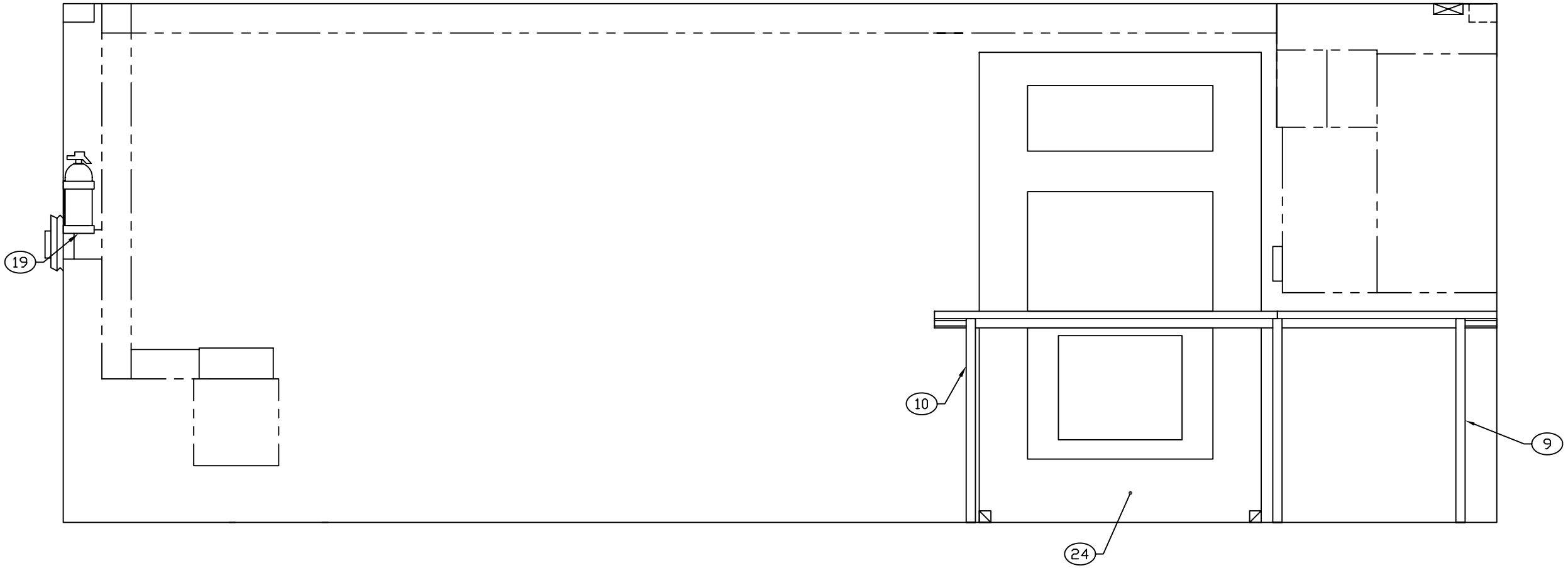

SECTION B-B SH 2

ENGINEER	DATE	DRAWER	DATE	SIZE	CAGE CODE	DRAWING NUMBER	REV
BEUSTER	85-11-8	J. BRANDON	87-8-14	D	91145	MFSE010401	B
NEXT ASSEMBLY		CHECKER		SCALE		SHEET	
FINAL		MAB	92-02-24	1/10		3	