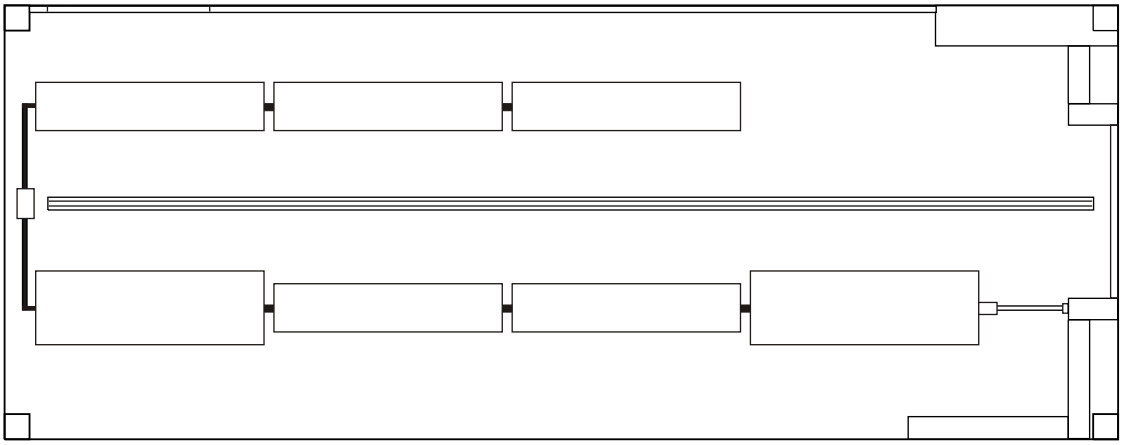

CEILING PLAN

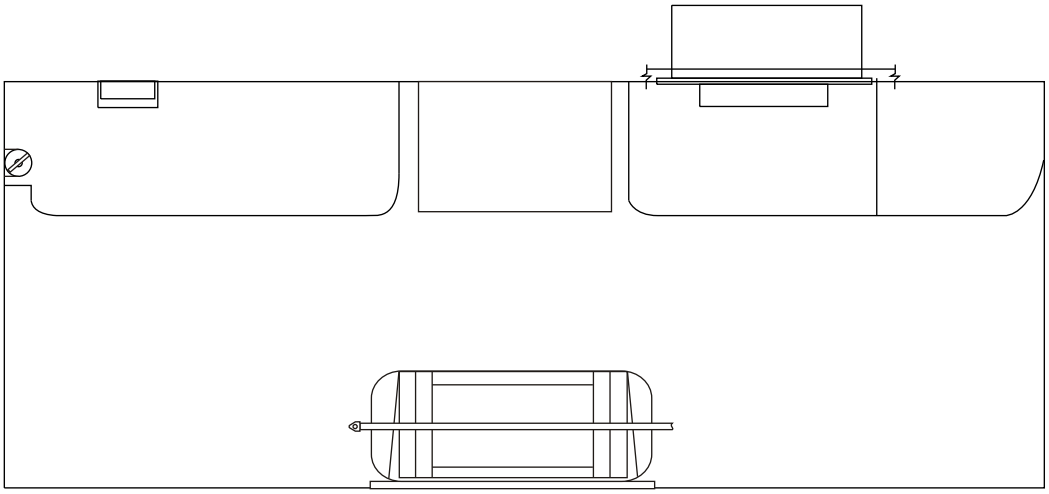

FLOOR PLAN

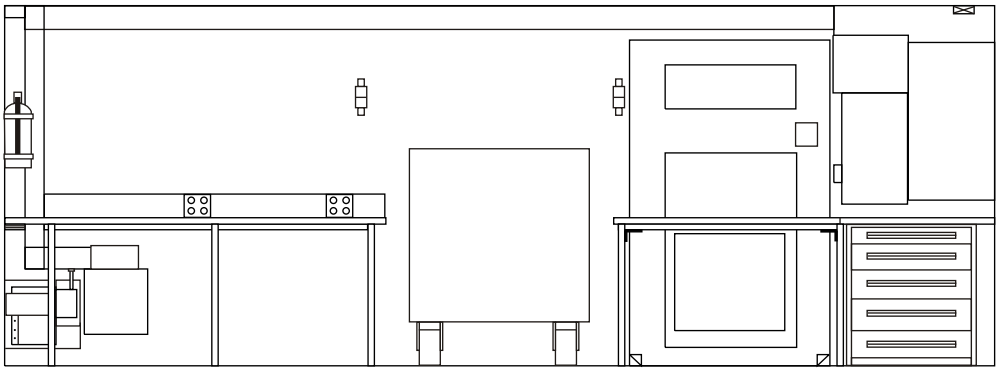

LEFT SIDE

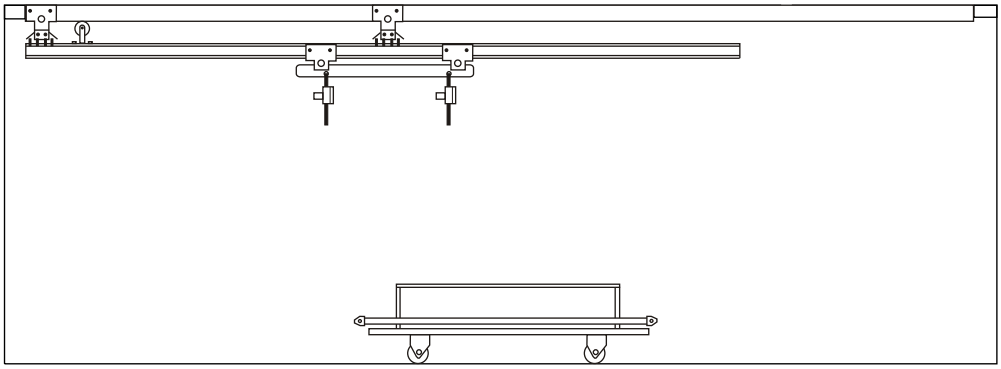

RIGHT SIDE