REVISION HISTORY			
REV	DESCRIPTION	DATE	APPROVAL
D	REVISED AND PARTIALLY REDRAWN BY T H NGUYEN.	04-06-04	R VOTAW

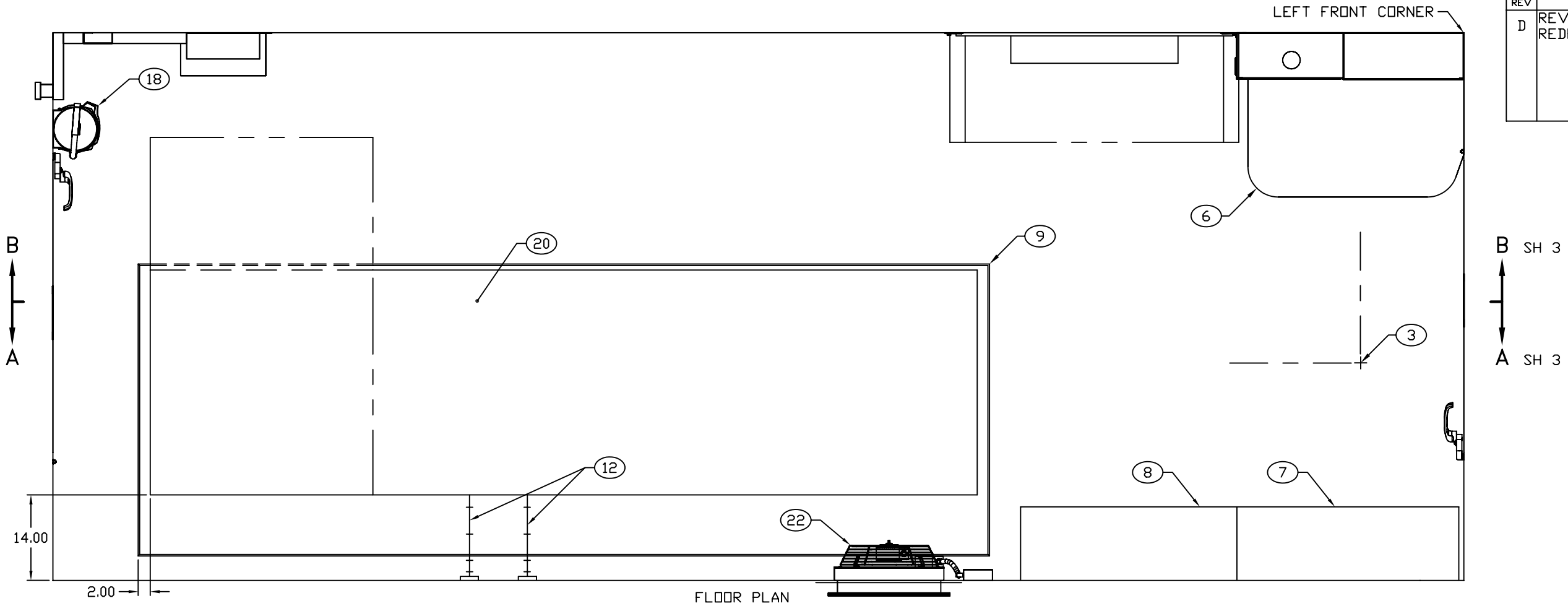

FLOOR PLAN

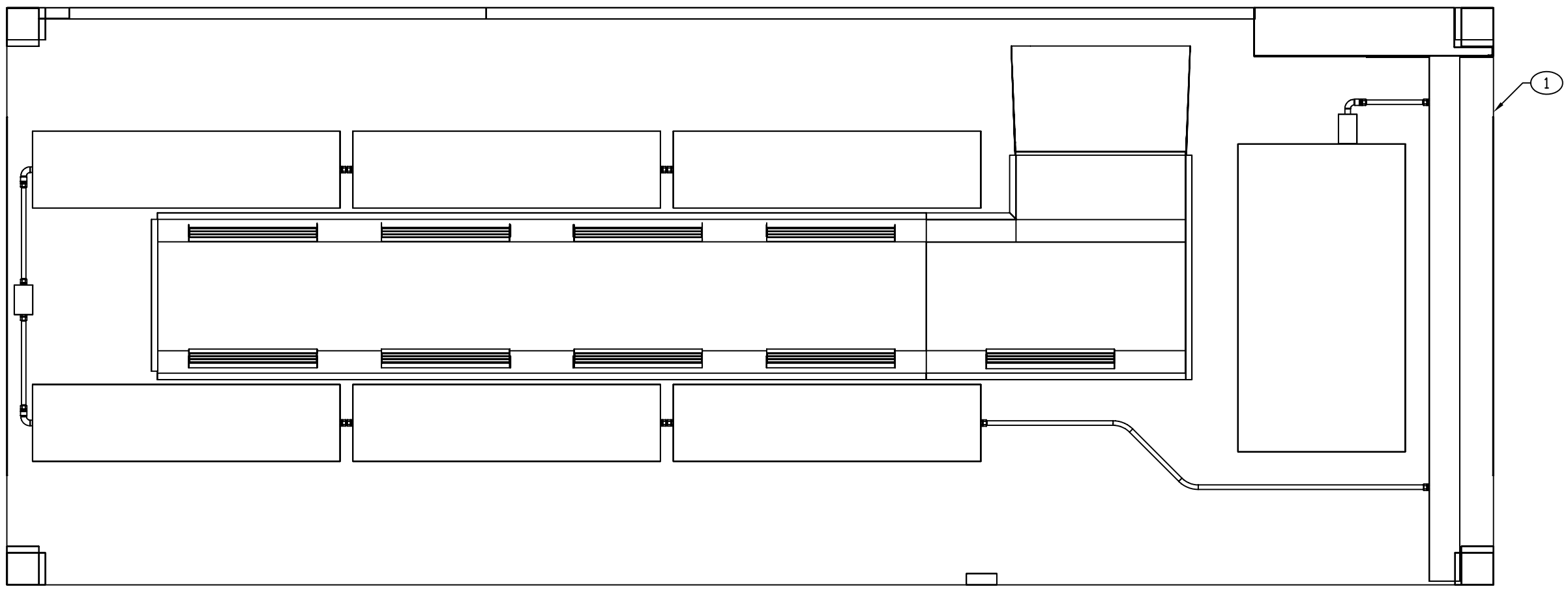

CEILING PLAN

−1 NDT

ENGINEER	DATE	DRAWER	DATE	SIZE	CAGE CODE	DRAWING NUMBER	REV
KIMBEL	85-08-08	PRV	94-05-10	D	91145	MFNT060201	D
NEXT ASSEMBLY		CHECKER		SCALE		SHEET	
FINAL		MAB	91-12-05	1/10		2	

REVISION HISTORY			
REV	DESCRIPTION	DATE	APPROVAL
D	REVISED AND PARTIALLY REDRAWN BY T H NGUYEN.	04-06-04	R VOTAW

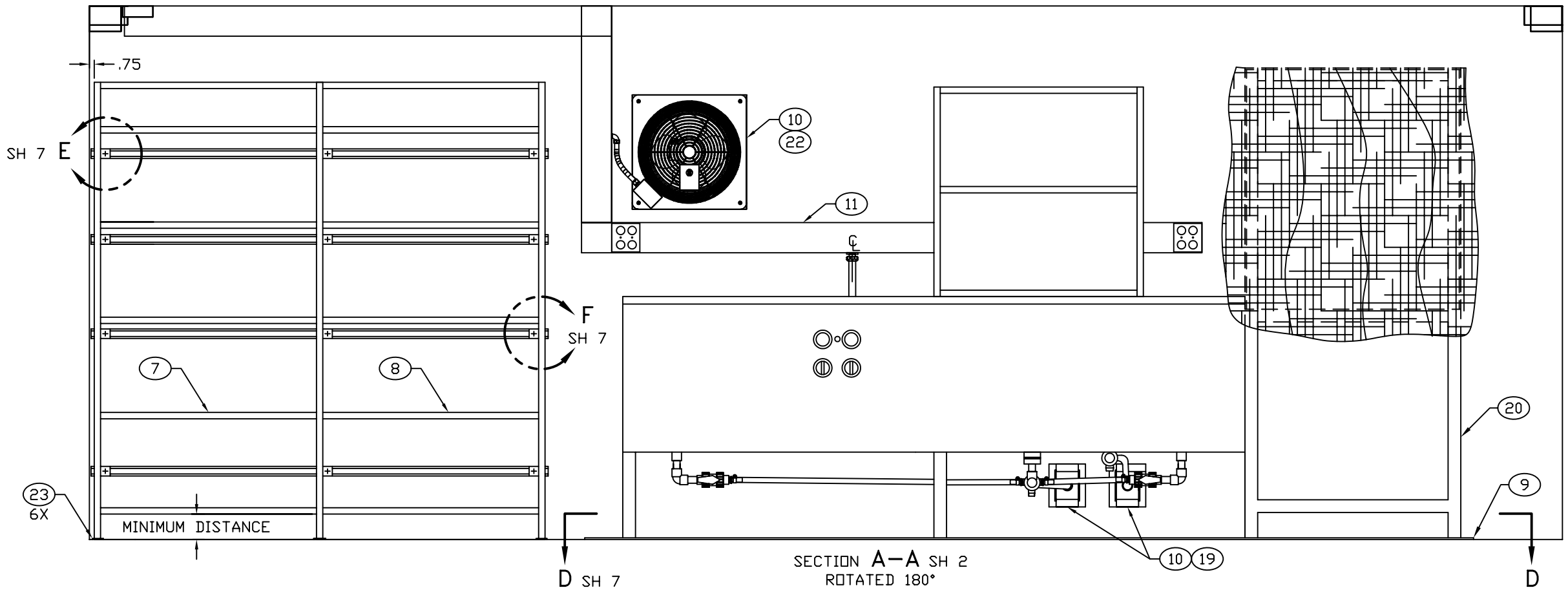

SECTION A–A SH 2
ROTATED 180°

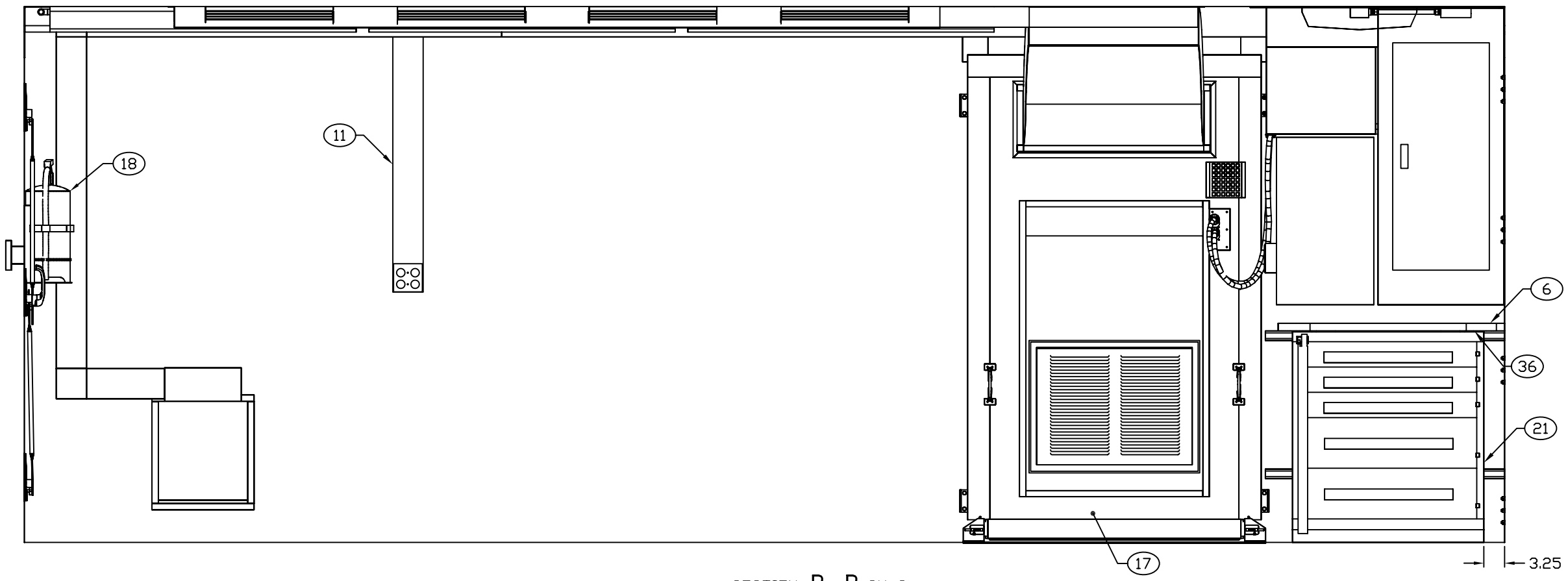

SECTION B–B SH 2

ENGINEER	DATE	DRAWER	DATE	SIZE	CAGE CODE	DRAWING NUMBER	REV
KIMBEL	85-08-08	PRV	94-05-10	D	91145	MFNT060201	D
NEXT ASSEMBLY		CHECKER		SCALE		SHEET	
FINAL		MAB	91-12-05	1/10		3	

REVISION HISTORY			
REV	DESCRIPTION	DATE	APPROVAL
D	REVISED AND PARTIALLY REDRAWN BY T H NGUYEN. THIS SHEET ADDED.	04-06-04	R VOTAW

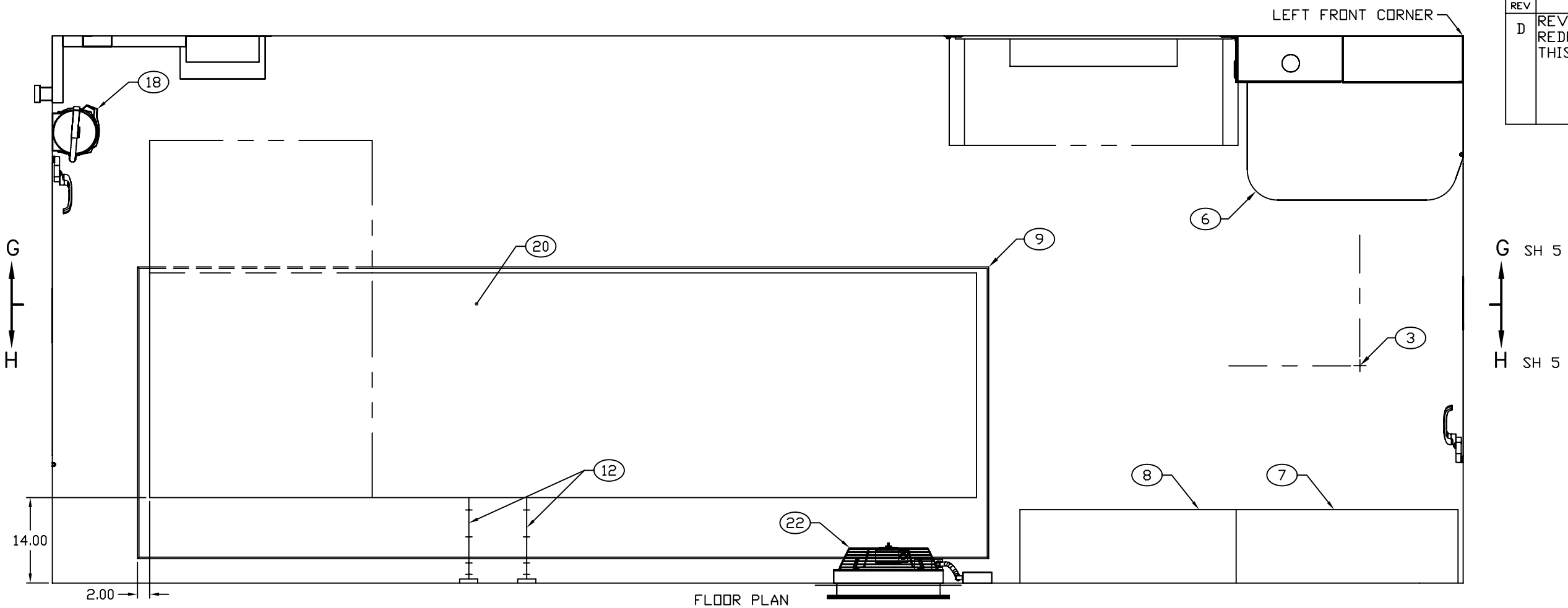

FLOOR PLAN

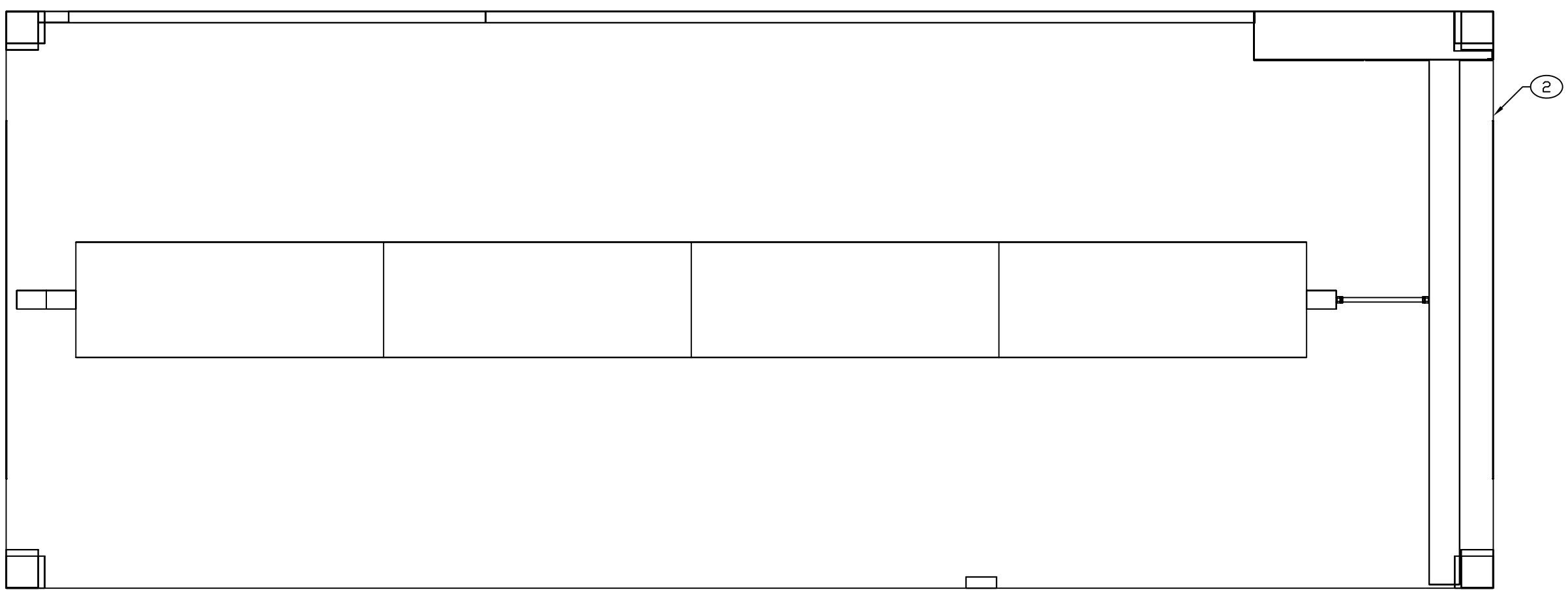

CEILING PLAN

-3 NDT

ENGINEER	DATE	DRAWER	DATE	SIZE	CAGE CODE	DRAWING NUMBER	REV
KIMBEL	85-08-08	PRV	94-05-10	D	91145	MFNT060201	D
NEXT ASSEMBLY		CHECKER		SCALE		SHEET	
FINAL		MAB	91-12-05	1/10		4	

REVISION HISTORY			
REV	DESCRIPTION	DATE	APPROVAL
D	REVISED AND PARTIALLY REDRAWN BY T H NGUYEN. THIS SHEET ADDED.	04-06-04	R VOTAW

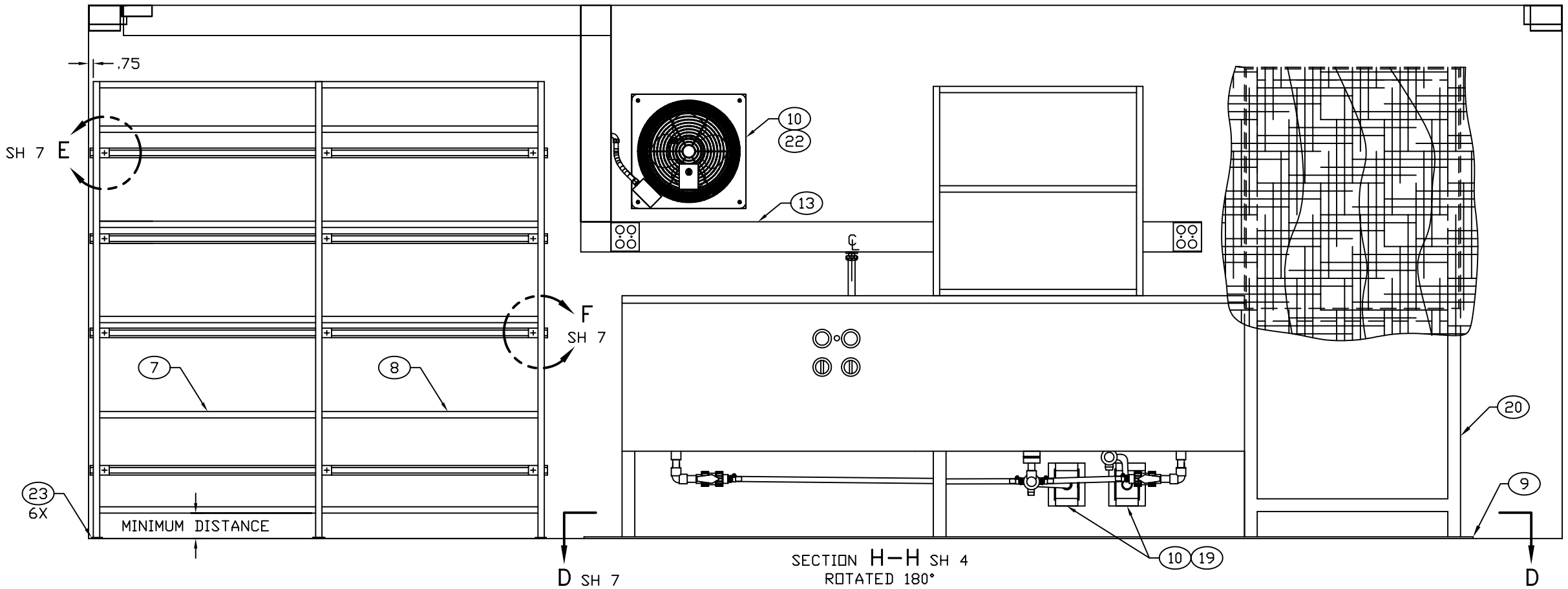

SECTION H–H SH 4
ROTATED 180°

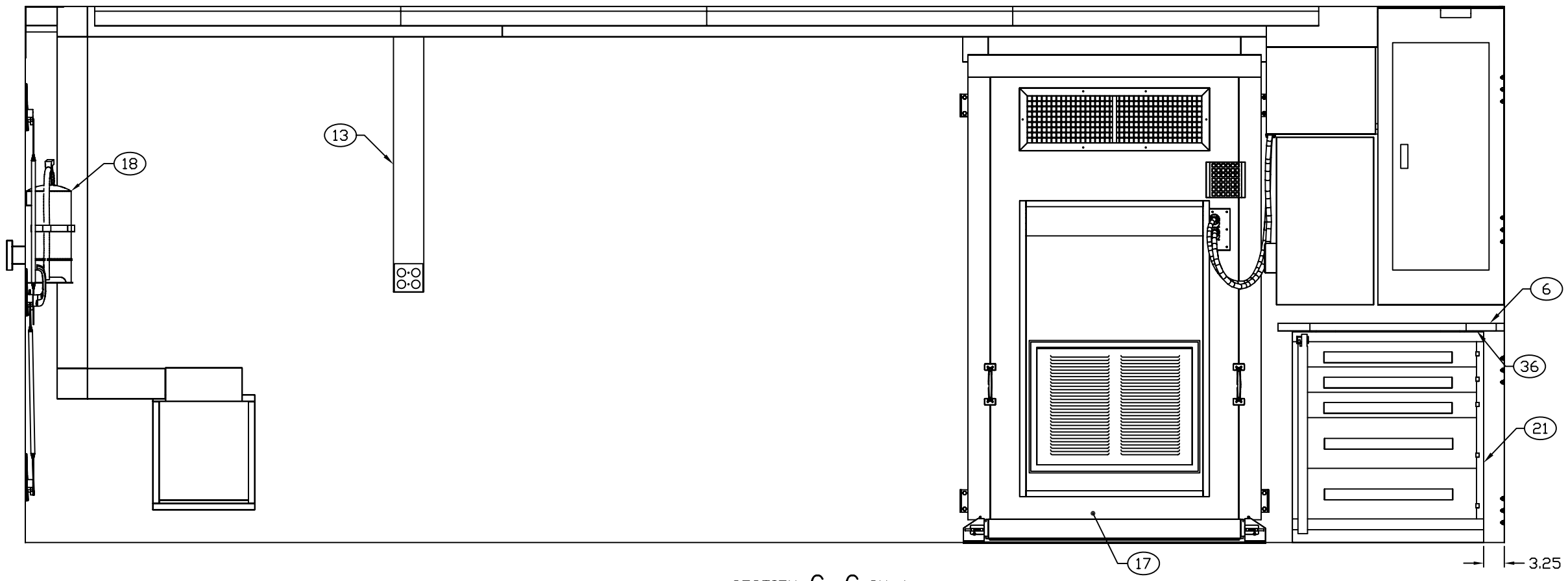

SECTION G–G SH 4

ENGINEER	DATE	DRAWER	DATE	SIZE	CAGE CODE	DRAWING NUMBER	REV
KIMBEL	85-08-08	PRV	94-05-10	D	91145	MFNT060201	D
NEXT ASSEMBLY		CHECKER		SCALE		SHEET	
FINAL		MAB	91-12-05	1/10		5	