REVISIONS			
REV	DESCRIPTION	DATE	APPROVAL
E	REVISED AND PARTIALLY REDRAWN BY M. BEUSTER. (6) FIND NUMBER ADDED.	2005-04-19	R A VOTAW

NOTES:

4.1 NOTCH FOR AIR LINE ON INSTALLATION.

4.2 NOTCH FOR ELECTRICAL CONDUIT ON INSTALLATION.

4.3 NOTCH SHORING FOR AIR CONDITIONER.

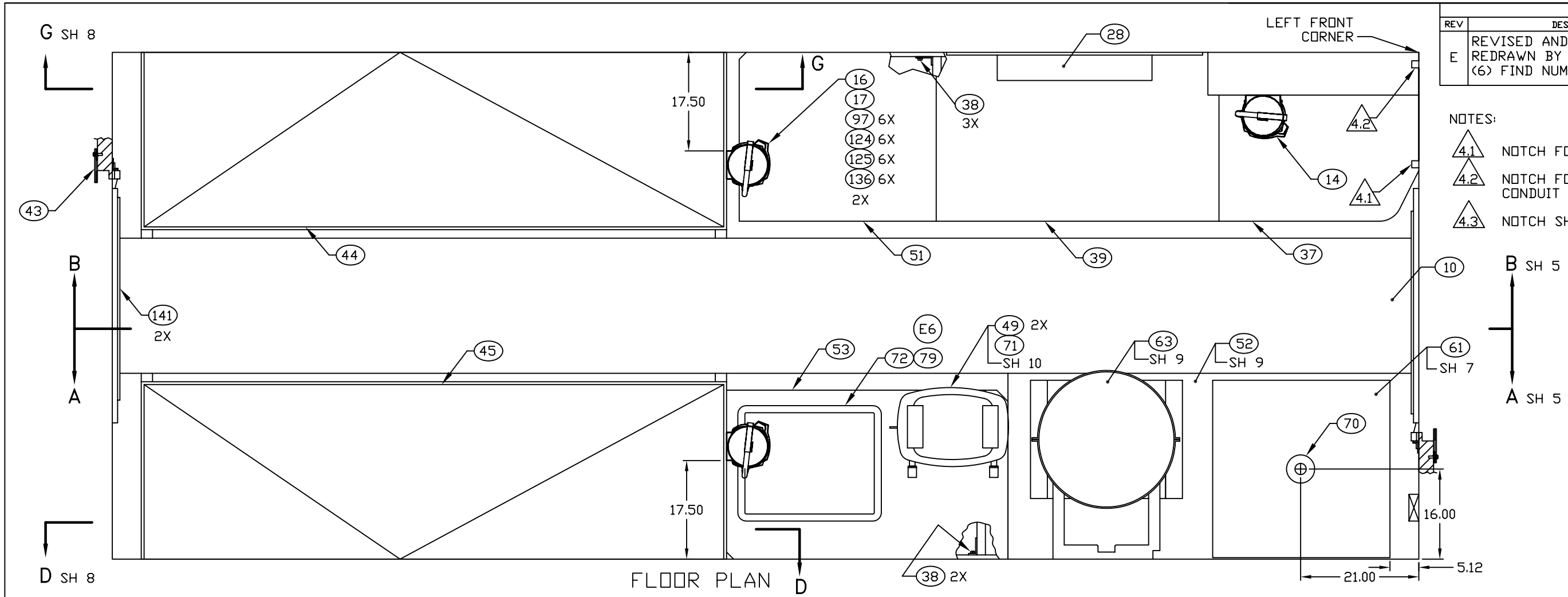

FLOOR PLAN

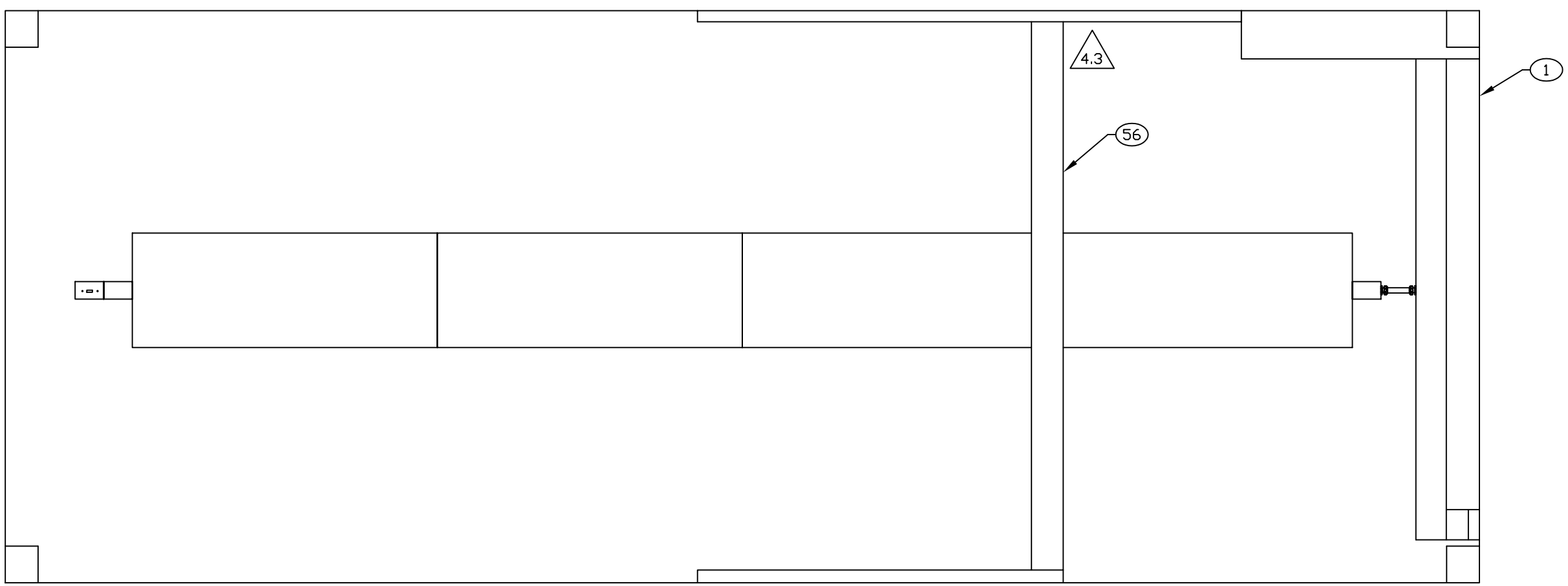

CEILING PLAN

ENGINEER	DATE	DRAWN BY	DATE	SIZE	CAGE CODE	DWG NO	REV
SIDDENS	85-01-14	EEM	99-09-27	D	91145	MFNB030401	E
NEXT ASSEMBLY		CHECKER					
FINAL		MAB	95-07-20	SCALE 1/10		SH 4	

REVISIONS			
REV	DESCRIPTION	DATE	APPROVAL
E	REVISED AND PARTIALLY REDRAWN BY M. BEUSTER. (6) FIND NUMBER ADDED.	2005-04-19	R A VOTAW

NOTE(S):

5.1 THESE ITEMS ARE INSTALLED IN THE MOBILE FACILITY WALL.

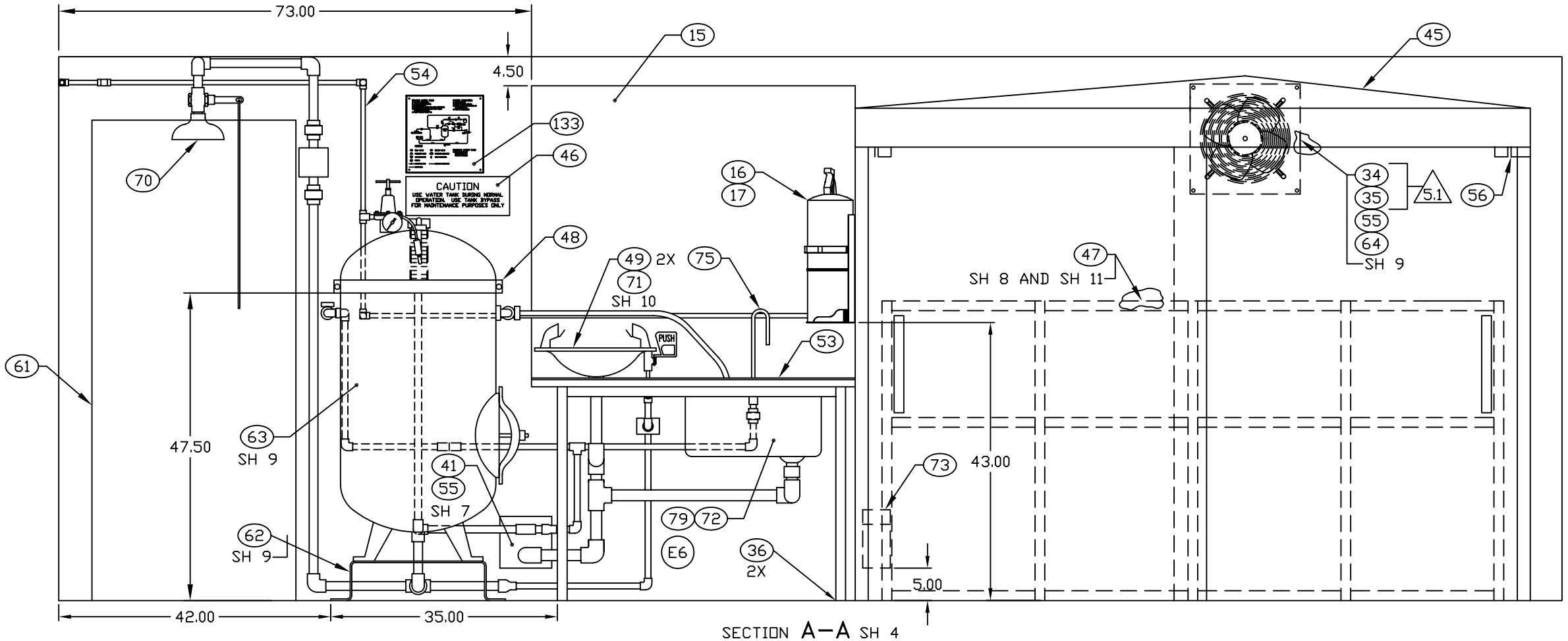

SECTION A–A SH 4
ROTATED 180°

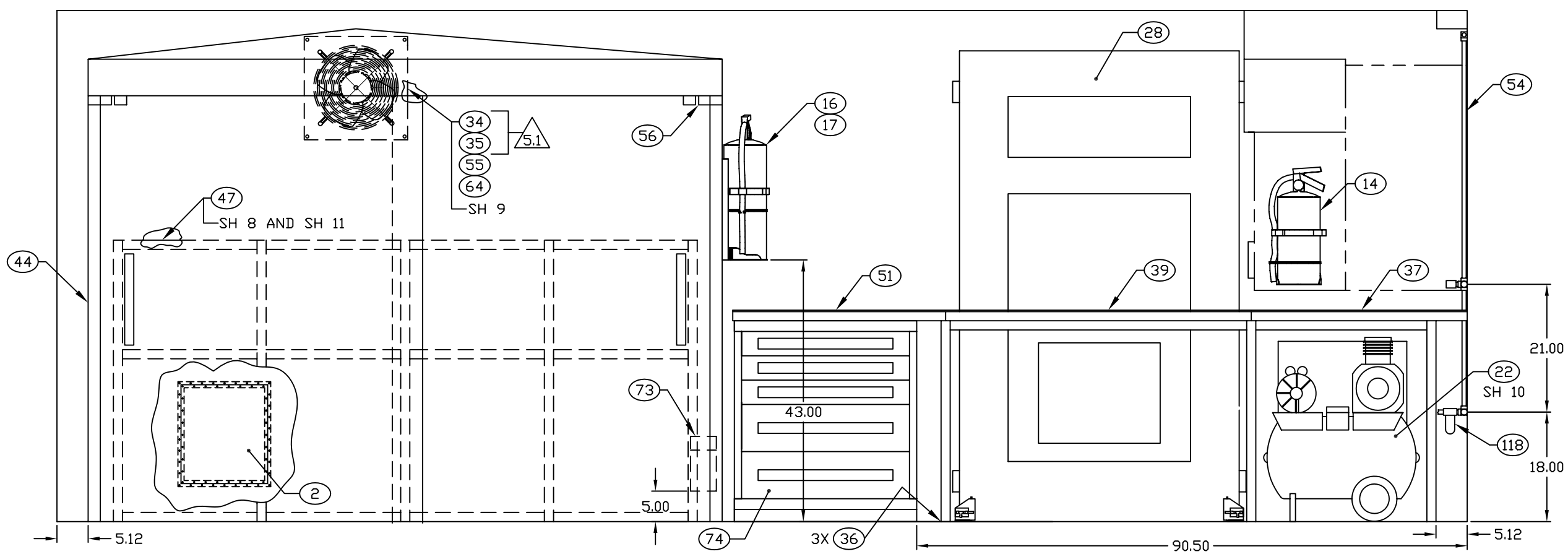

SECTION B–B SH 4

ENGINEER	DATE	DRAWN BY	DATE	SIZE	CAGE CODE	DWG NO	REV
SIDDENS	85-01-14	TN	97-04-22	D	91145	MFNB030401	E
NEXT ASSEMBLY		CHECKER					
FINAL		MAB	95-07-20	SCALE 1/10		SH 5	