REVISIONS			
REV	DESCRIPTION	DATE	APPROVAL
C	REVISED AND PARTIALLY REDRAWN BY M BEUSTER. (2) ITEM ADDED.	02-11-07	R. A. VOTAW

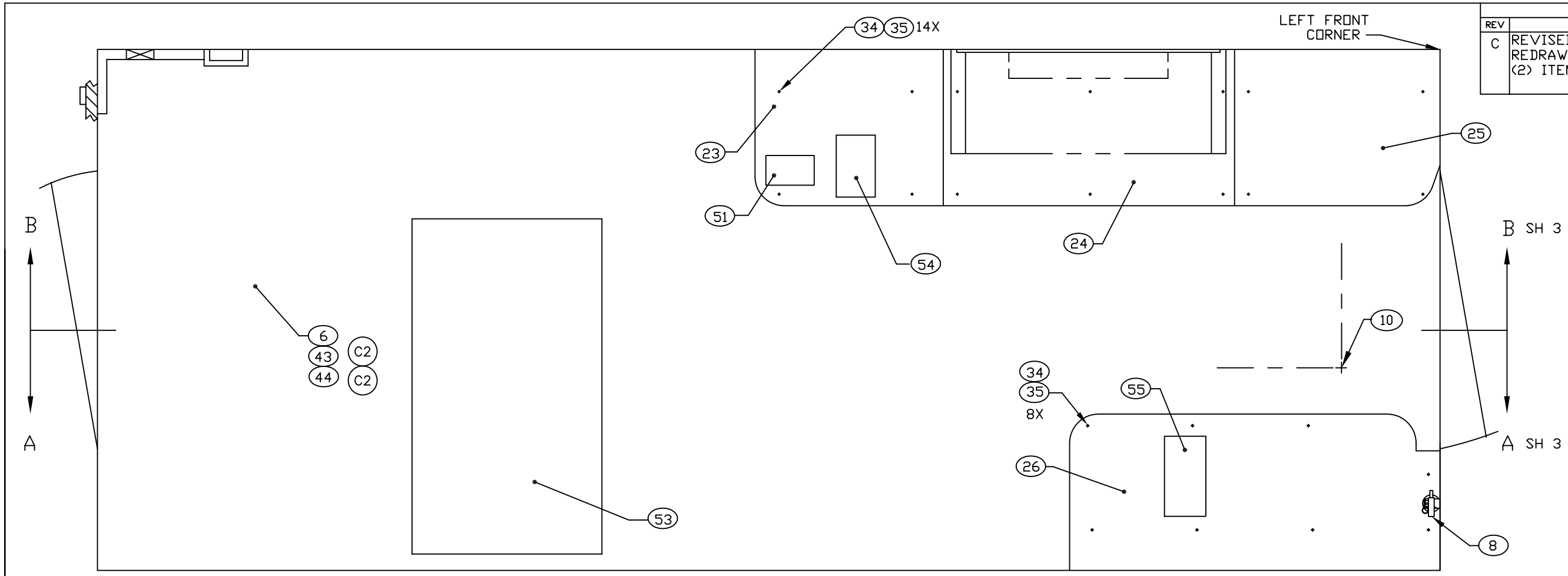

FLOOR PLAN

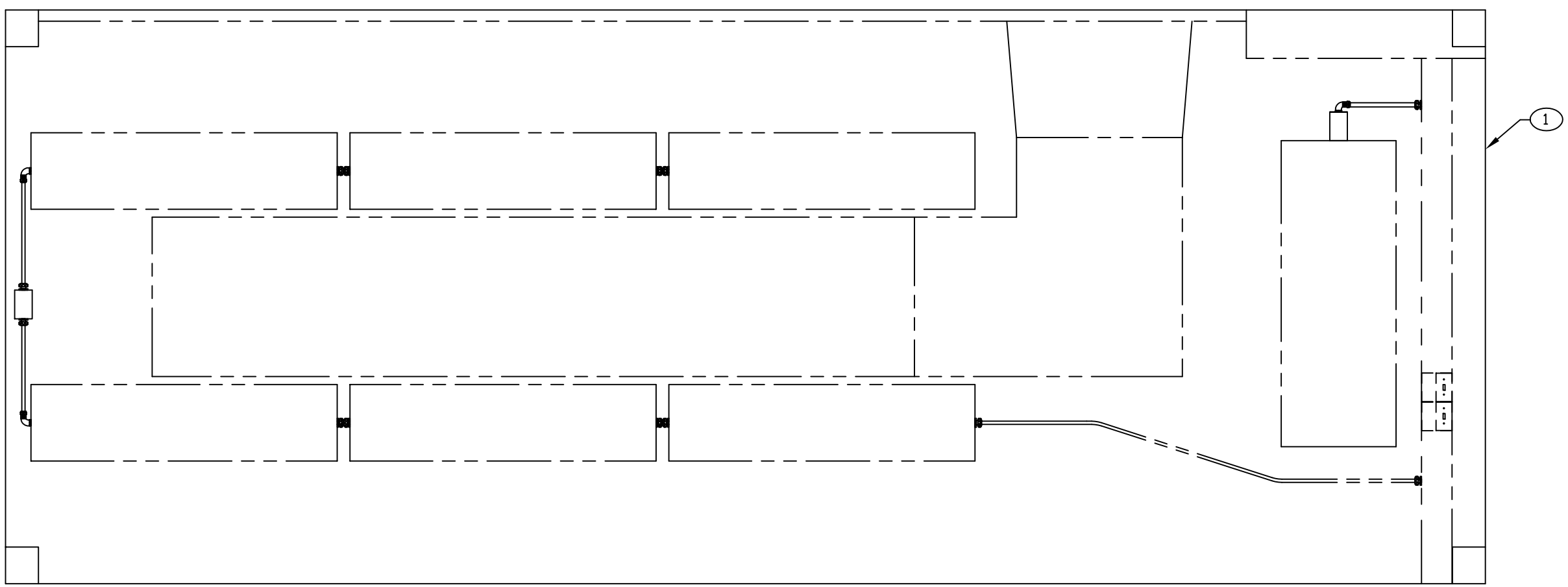

CEILING PLAN

ENGINEER	DATE	DRAWN BY	DATE	SIZE	CAGE CODE	DWG NO	REV
P. PHAN	92-03-25	PRV	01-11-02	D	91145	MFMM040501	C
NEXT ASSEMBLY FINAL		CHECKER TN	01-11-02	SCALE 1/10		SH 2	

REVISIONS			
REV	DESCRIPTION	DATE	APPROVAL
A	REPRINTED.	01-11-02	R. A. VOTAW

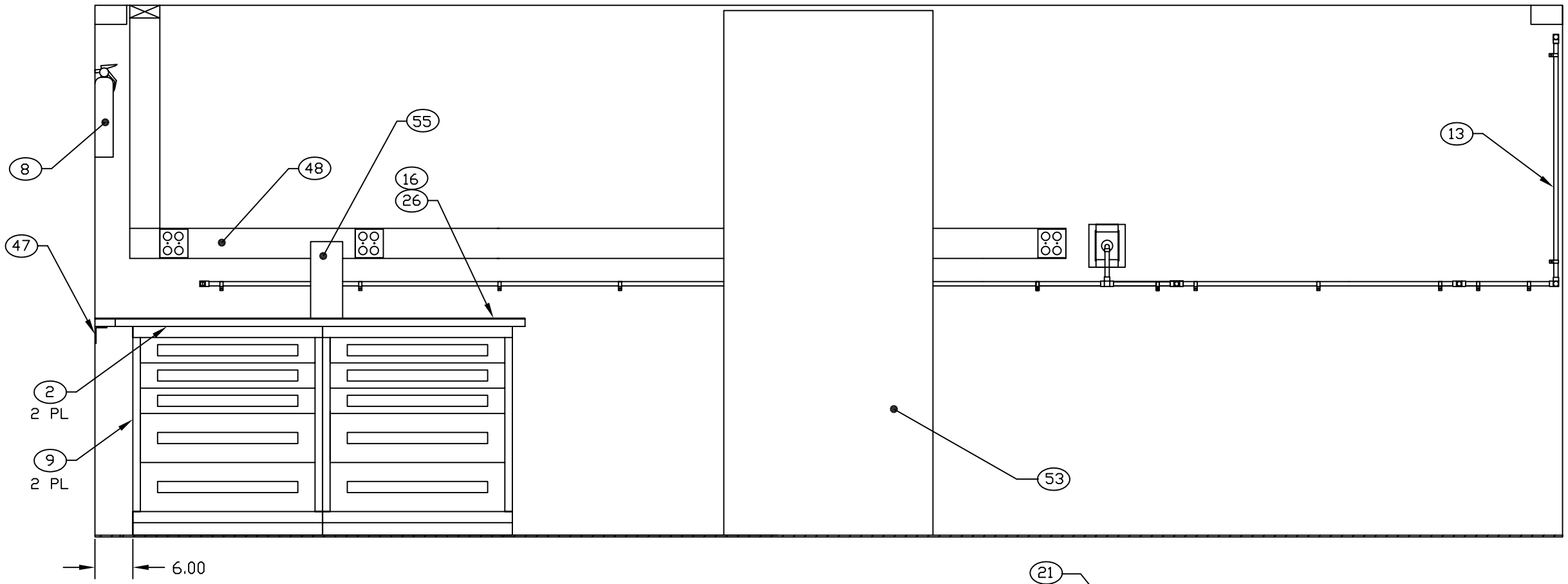

SECTION A-A
SH 2
ROTATED 180°

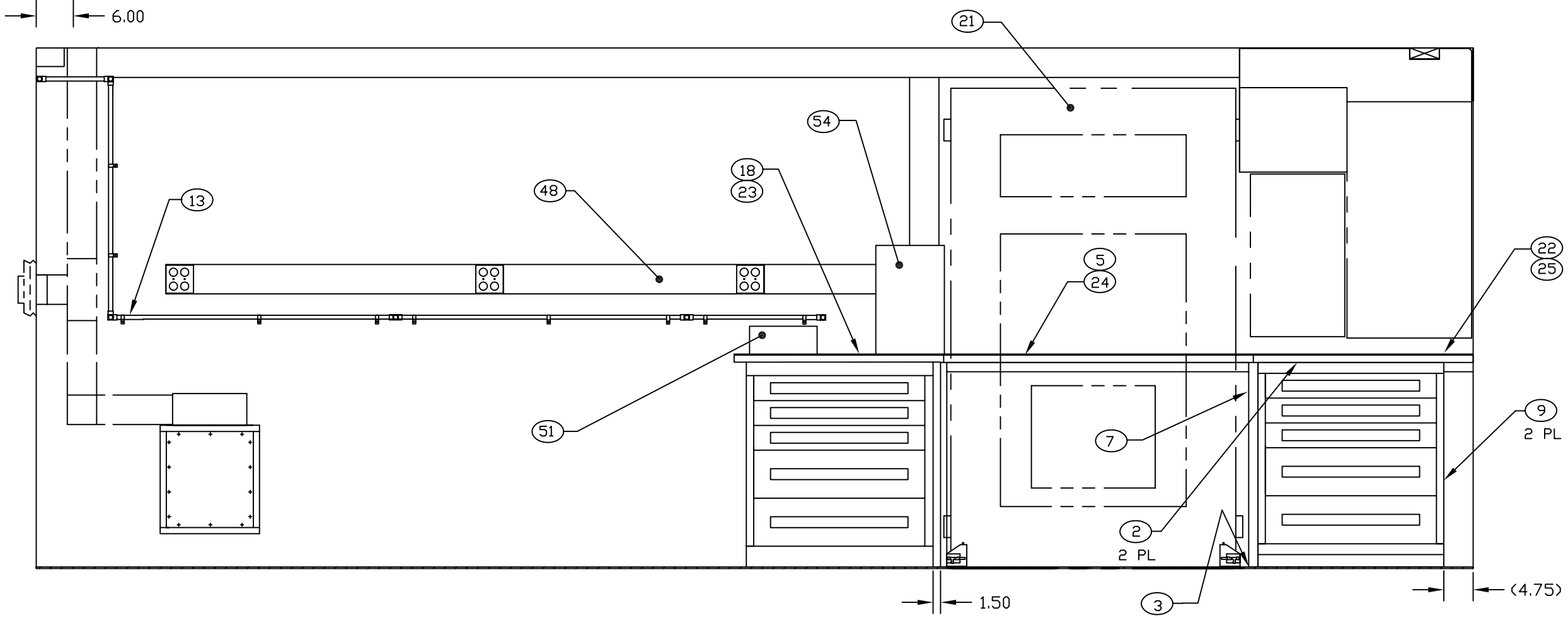

SECTION B-B
SH 2

ENGINEER	DATE	DRAWN BY	DATE	SIZE	CAGE CODE	DWG NO	REV
P. PHAN	92-03-25	PRV	01-11-02	D	91145	MFMM040501	A
NEXT ASSEMBLY FINAL		CHECKER TN	01-11-02	SCALE 1/10		SH 3	