REVISION HISTORY			
REV	DESCRIPTION	DATE	APPROVAL
E	REVISED AND PARTIALLY REDRAWN BY T NGUYEN. EMERGENCY LIGHT ADDED.	04-02-19	R VOTAW

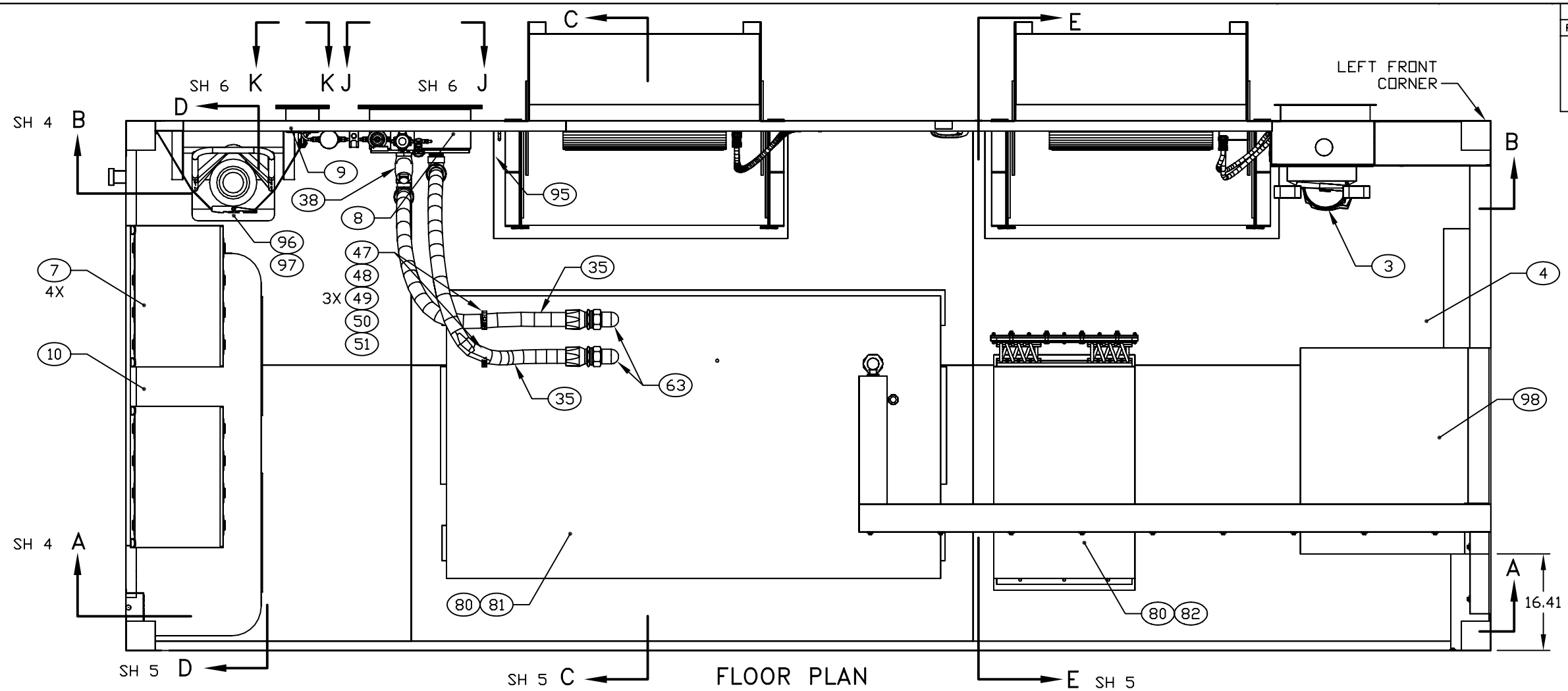

FLOOR PLAN

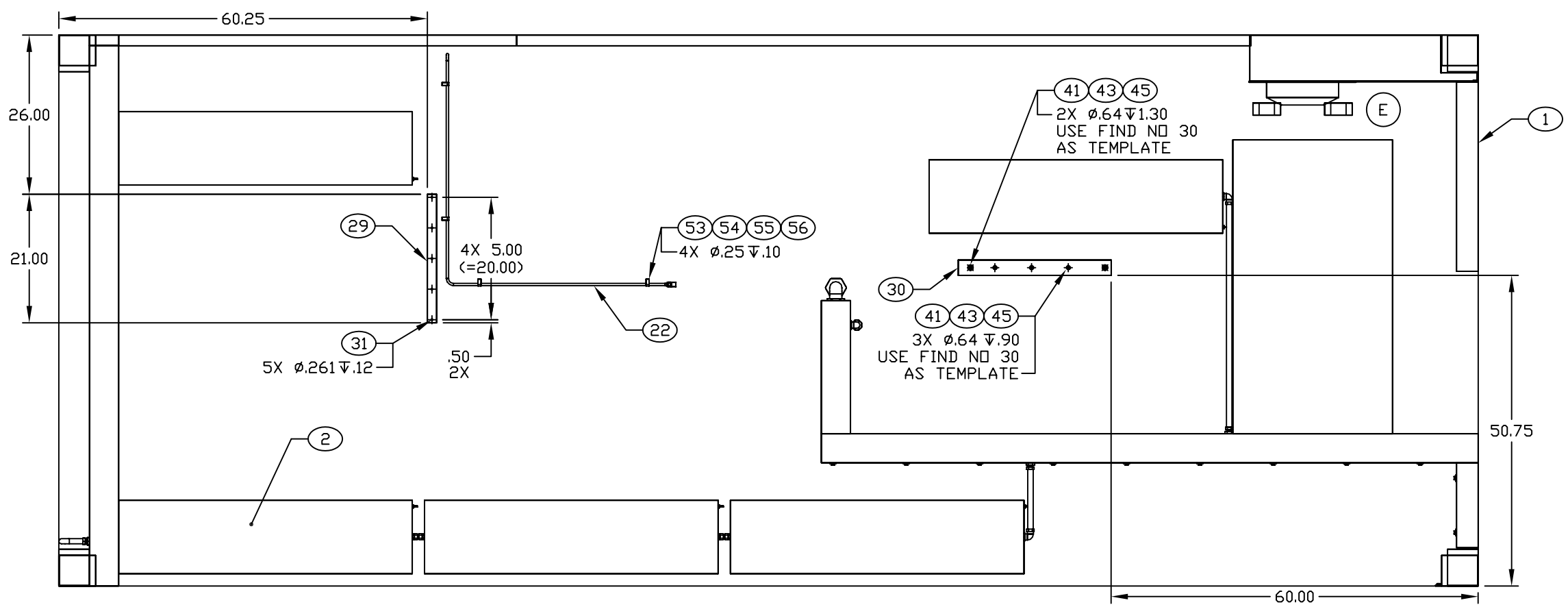

CEILING PLAN

ENGINEER	DATE	DRAWER	DATE	SIZE	CAGE CODE	DRAWING NUMBER	REV
T NGUYEN	97-10-01	TN	98-11-03	D	91145	MFHY050101	E
NEXT ASSEMBLY		CHECKER		SCALE		SHEET	
FINAL		MAB	97-10-31	1/11		3	

REVISION HISTORY			
REV	DESCRIPTION	DATE	APPROVAL
E	REVISED AND PARTIALLY REDRAWN BY T NGUYEN. (5) DIMENSION CHANGED. (6) EMERGENCY LIGHT ADDED.	04-02-19	R VOTAW

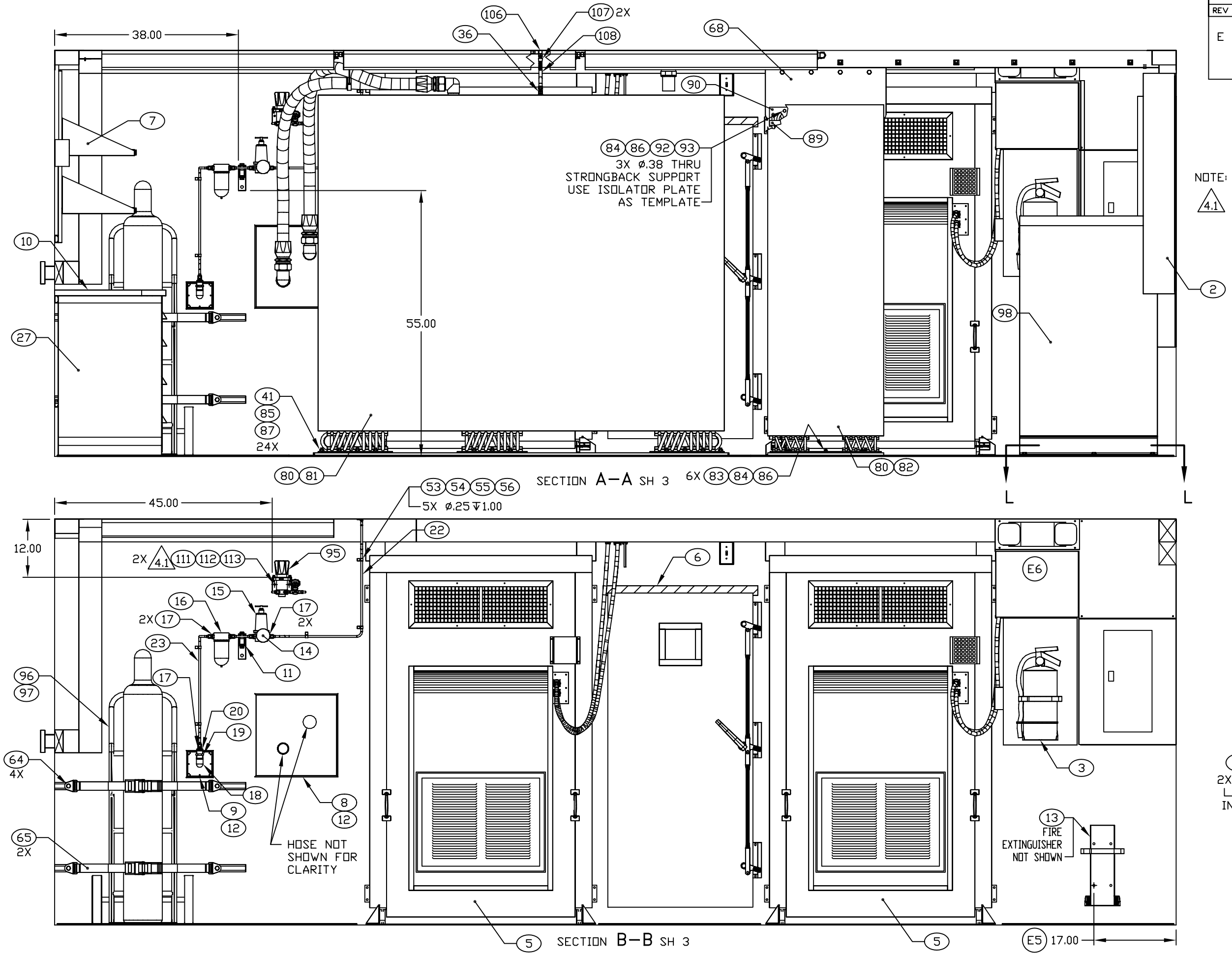

NOTE:

4.1 ø.62↧.40. USE REGULATOR ANGLE AS TEMPLATE.

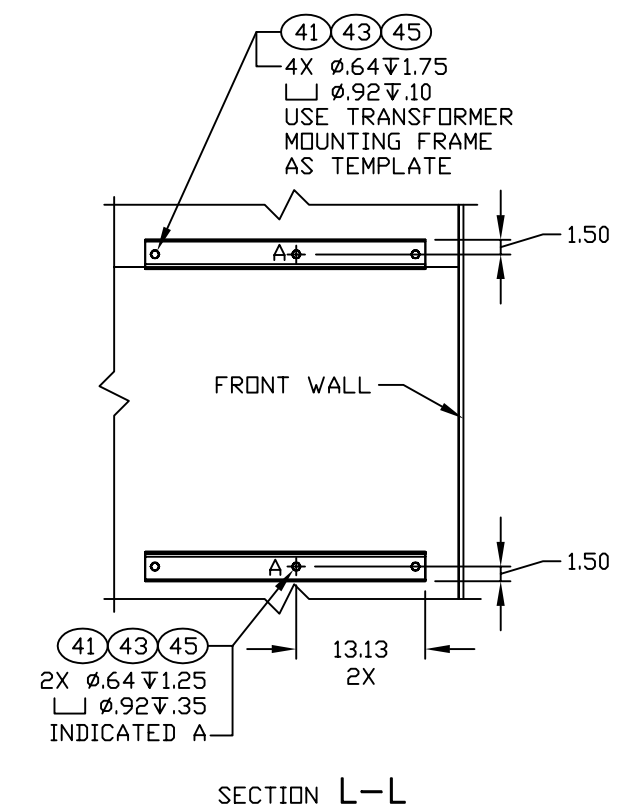

SECTION L–L

ENGINEER	DATE	DRAWER	DATE	SIZE	CAGE CODE	DRAWING NUMBER	REV
T NGUYEN	97-10-01	TN	98-12-09	D	91145	MFHY050101	E
NEXT ASSEMBLY		CHECKER		SCALE			SHEET
FINAL		MAB	97-10-31	1/10			4