REVISION HISTORY			
REV	DESCRIPTION	DATE	APPROVAL
C	REVISED AND PARTIALLY REDRAWN BY T H NGUYEN. EMERGENCY LIGHT ADDED.	04-01-26	R VOTAW

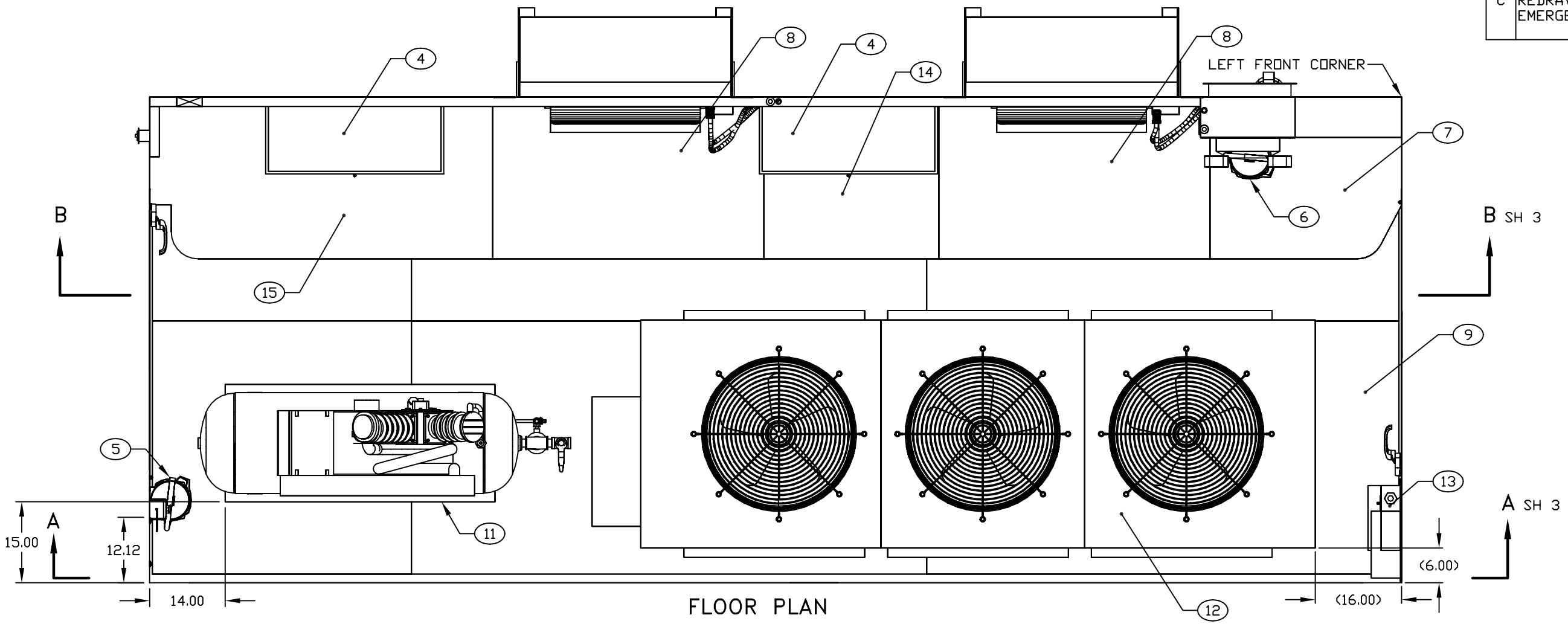

FLOOR PLAN

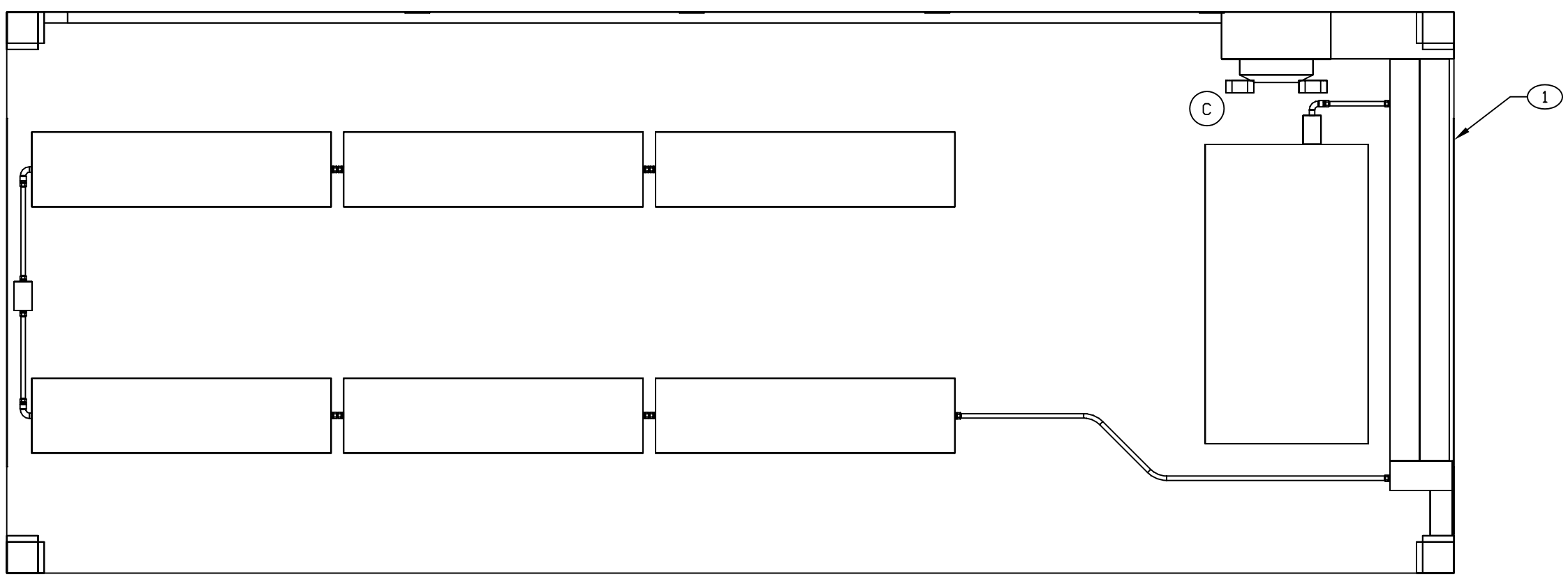

CEILING PLAN

ENGINEER	DATE	DRAWER	DATE	SIZE	CAGE CODE	DRAWING NUMBER	REV
T NGUYEN	97-10-24	TN	98-04-06	D	91145	MFHY040101	C
NEXT ASSEMBLY FINAL		CHECKER PRV	97-11	SCALE 1/11		SHEET 2	

REVISION HISTORY			
REV	DESCRIPTION	DATE	APPROVAL
C	REVISED AND PARTIALLY REDRAWN BY T H NGUYEN. EMERGENCY LIGHT ADDED.	04-01-26	R VOTAW

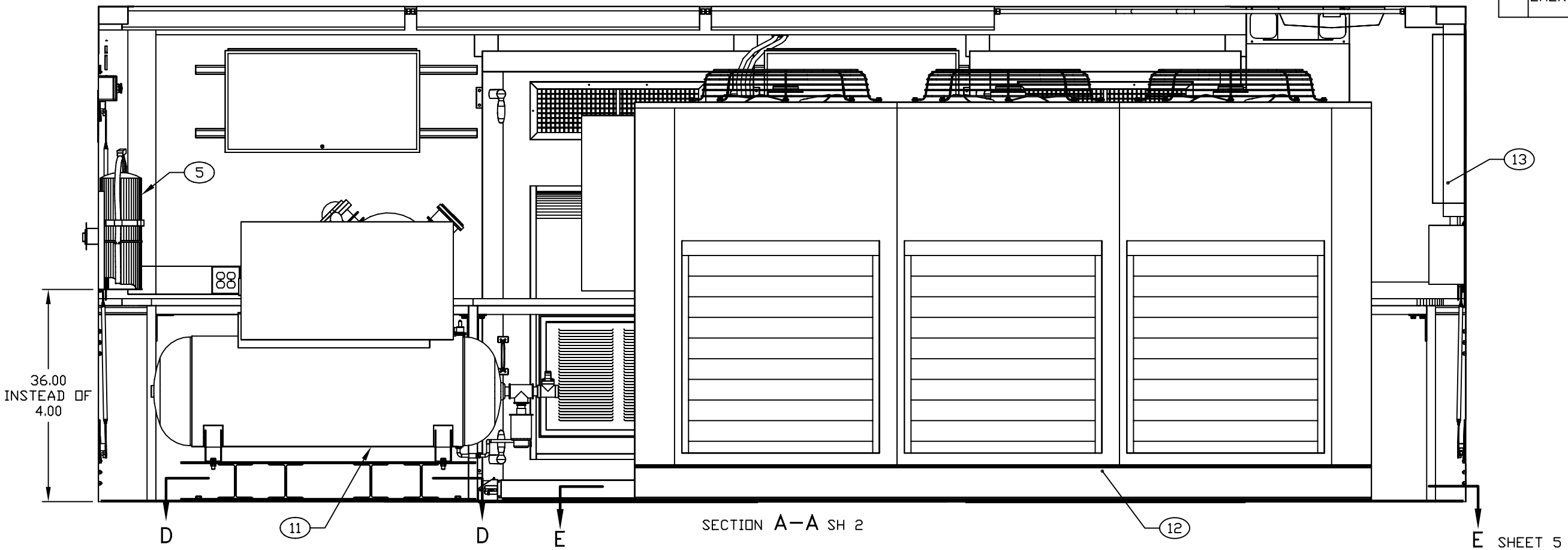

SECTION A–A SH 2

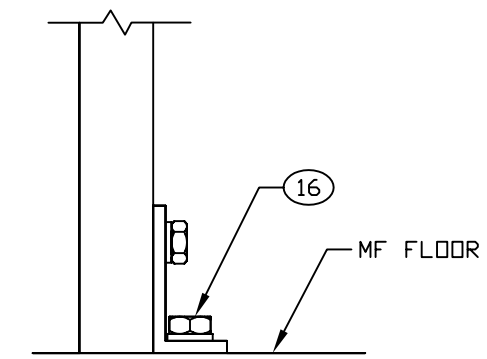

2X VIEW C–C
SCALE 1/2

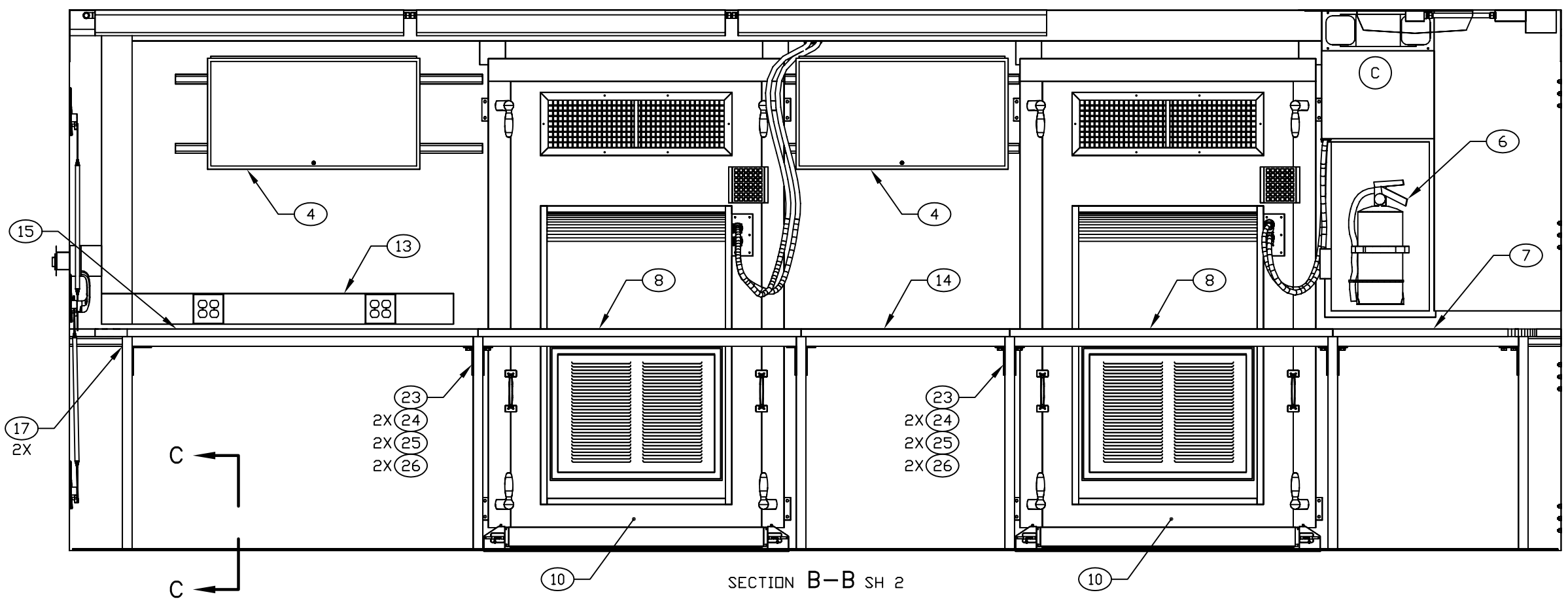

SECTION B–B SH 2

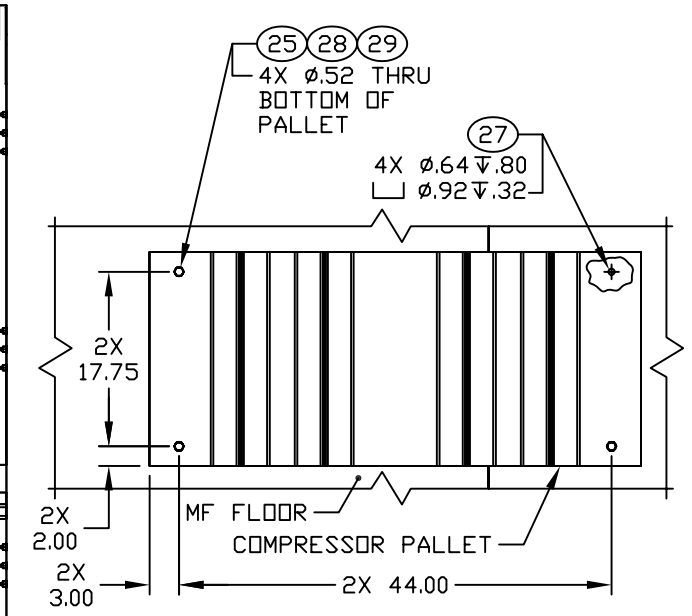

SECTION D–D

ENGINEER	DATE	DRAWER	DATE	SIZE	CAGE CODE	DRAWING NUMBER	REV
T NGUYEN	97-10-24	TN	00-08-04	D	91145	MFHY040101	C
NEXT ASSEMBLY		CHECKER		SCALE		SHEET	
FINAL		PRV	97-11	1/10		3	