REVISION HISTORY			
REV	DESCRIPTION	DATE	APPROVAL
A	REVISED AND PARTIALLY REDRAWN BY M. BEUSTER.	2004-04-14	R A VOTAW

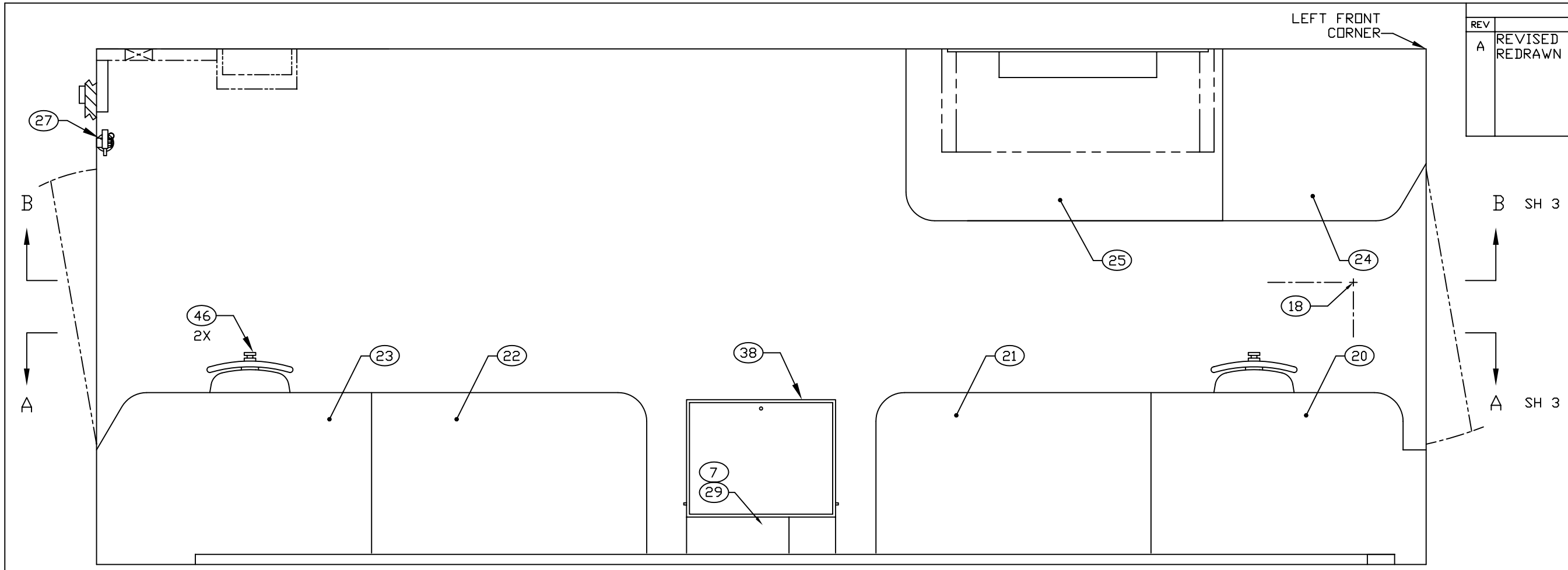

FLOOR PLAN

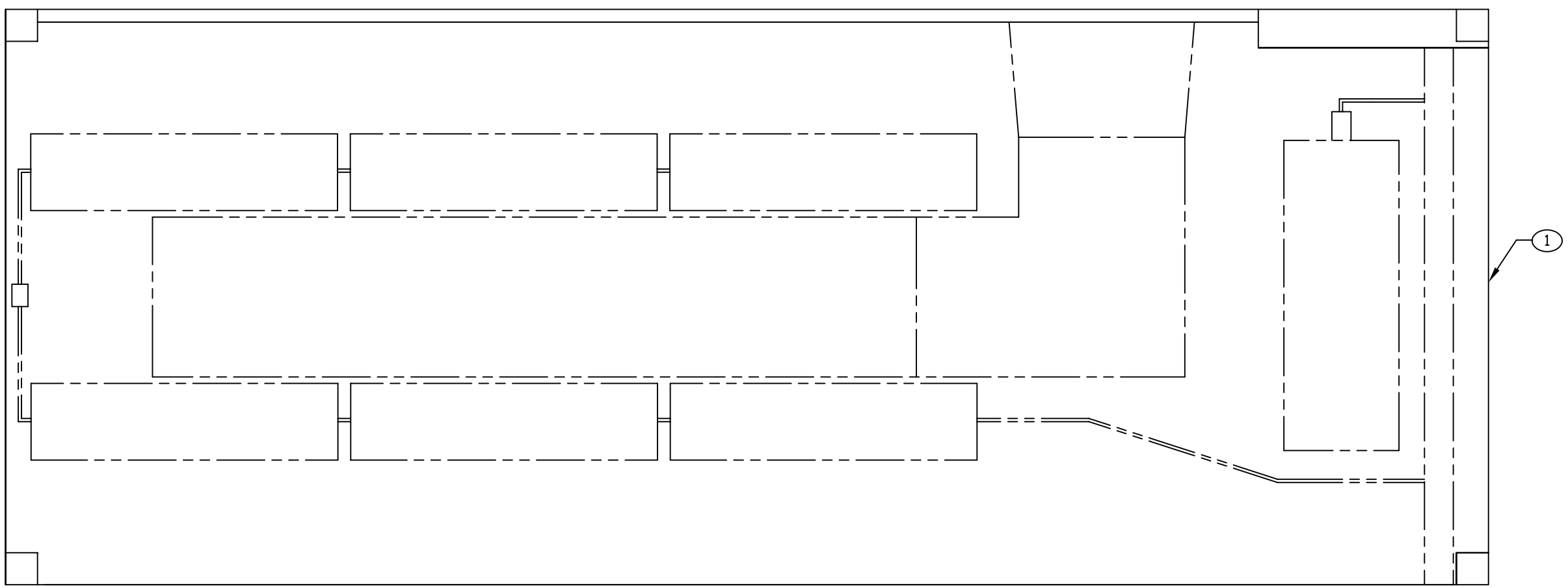

CEILING PLAN

ENGINEER	DATE	DRAWER	DATE	SIZE	CAGE CODE	DRAWING NUMBER	REV
P. PHAN	1992-09-10	P. PHAN	1992-09-10	D	91145	MFHC020401	A
NEXT ASSEMBLY		CHECKER		SCALE 1/10		SHEET 2	
FINAL		MAB	1992-10				

REVISION HISTORY			
REV	DESCRIPTION	DATE	APPROVAL
A	REVISED AND PARTIALLY REDRAWN BY M. BEUSTER.	2004-04-14	R A VOTAW

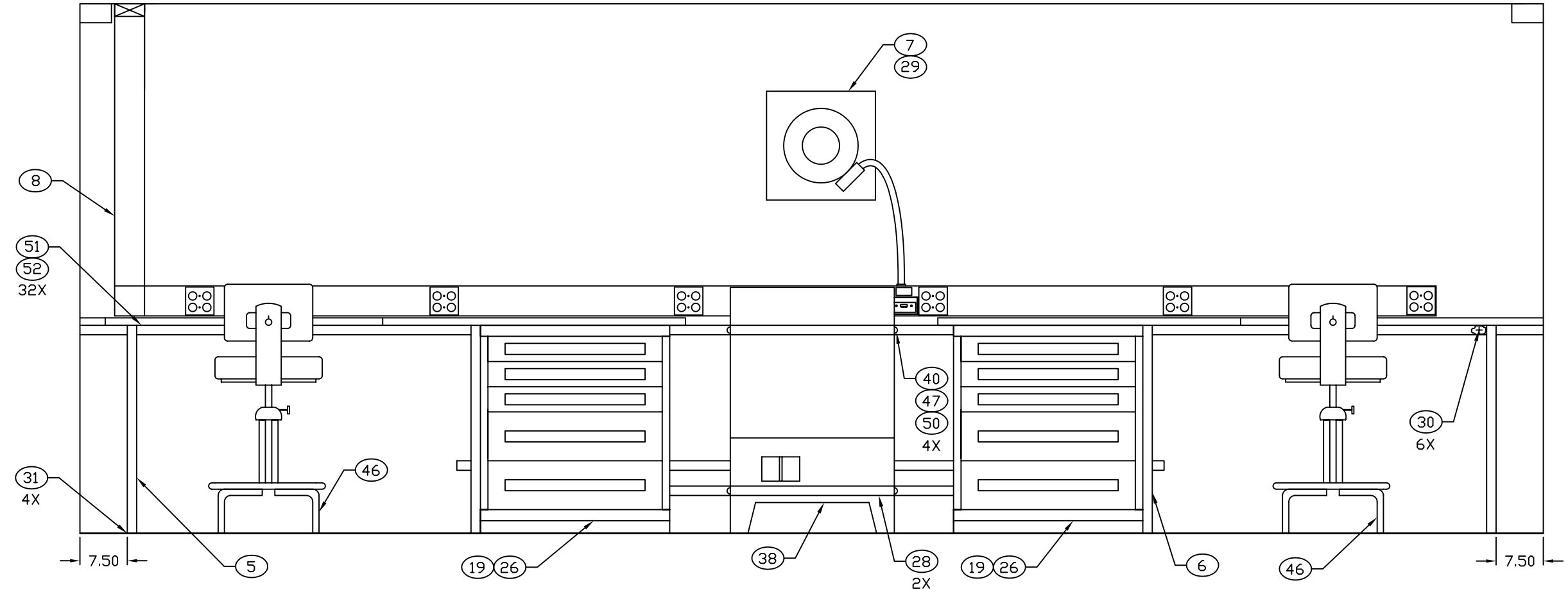

SECTION A-A SH 2
ROTATED 180°

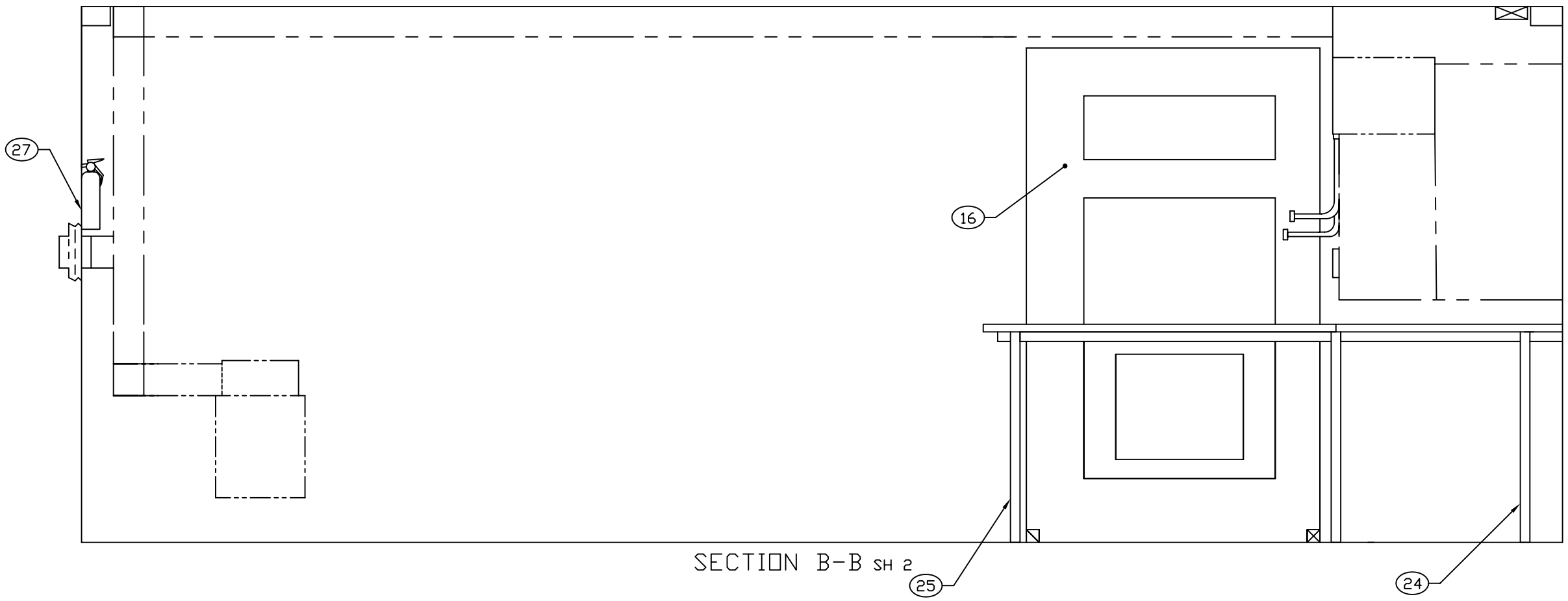

SECTION B-B SH 2

ENGINEER	DATE	DRAWER	DATE	SIZE	CAGE CODE	DRAWING NUMBER	REV
P. PHAN	1992-09-10	P. PHAN	1992-09-10	D	91145	MFHC020401	A
NEXT ASSEMBLY		CHECKER		SCALE		SHEET	
FINAL		MAB	1992-10	1/10		3	