REVISION HISTORY			
REV	DESCRIPTION	DATE	APPROVAL
H	REVISED AND PARTIALLY REDRAWN BY M BEUSTER. LIGHTING CHANGED.	2006-12-05	R A VOTAW

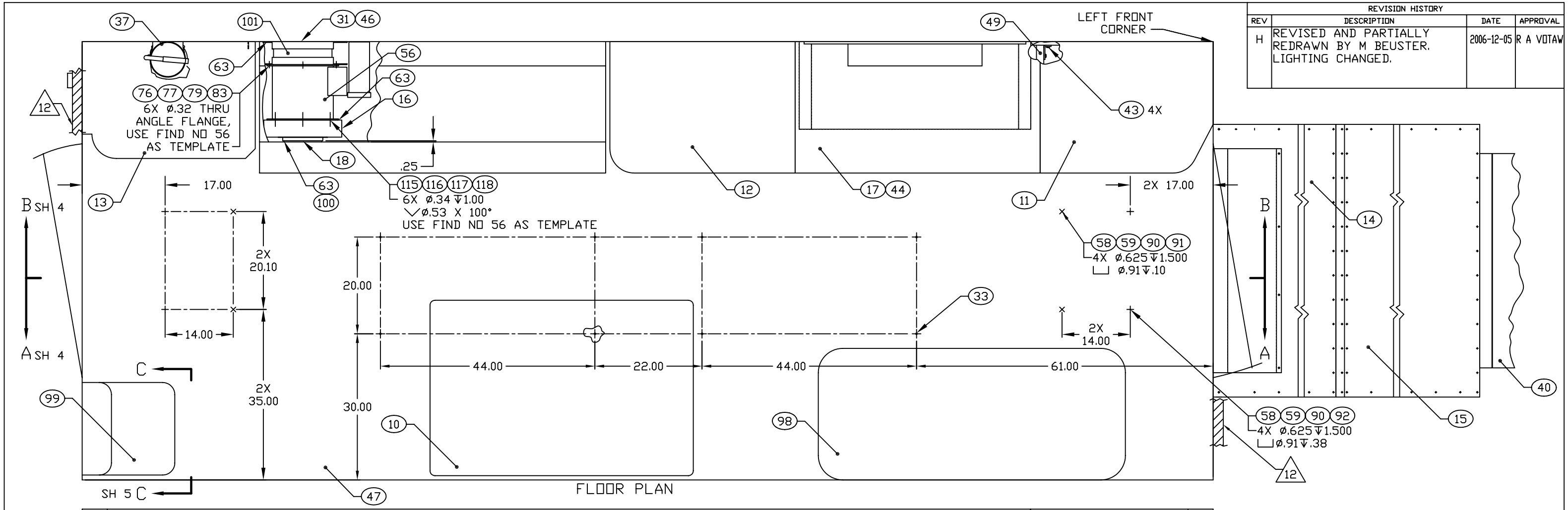

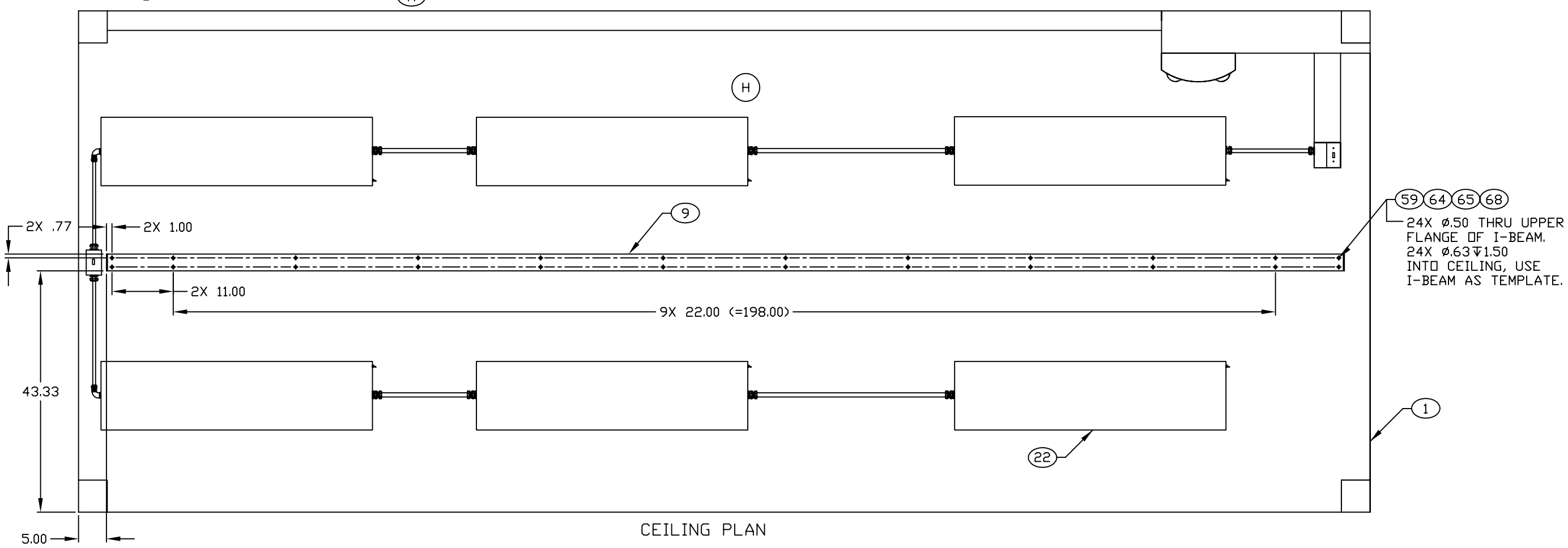

ENGINEER	DATE	DRAWN BY	DATE	SIZE	CAGE CODE	DWG NO	REV
R. A. VOTAW	94-03-17	TN	96-08-27	D	91145	MFGM020401	H
NEXT ASSEMBLY FINAL		CHECKER MAB	94-04-06	SCALE 1/10		SH 3	

REVISION HISTORY			
REV	DESCRIPTION	DATE	APPROVAL
H	REVISED AND PARTIALLY REDRAWN BY M BEUSTER. FAN LOWERED.	2006-12-05	R A VOTAW

NOTES:

4.1 CUT TO FIT AT TIME OF INSTALLATION.

4.2 4X ø.32, PLACE HOLES SO BOLT IS PAST END OF RAIL.

4.3 ALIGN LEFT HOLES OF BRACKET WITH VERTICAL FRAME MEMBER.

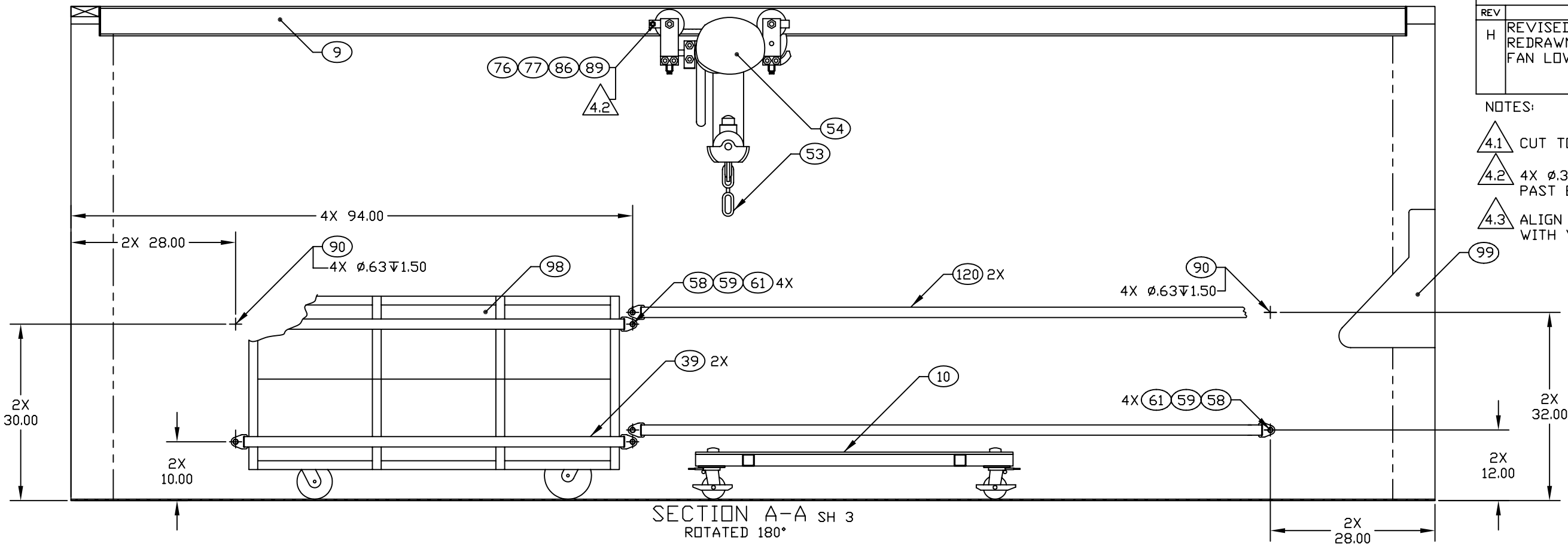

SECTION A-A SH 3
ROTATED 180°

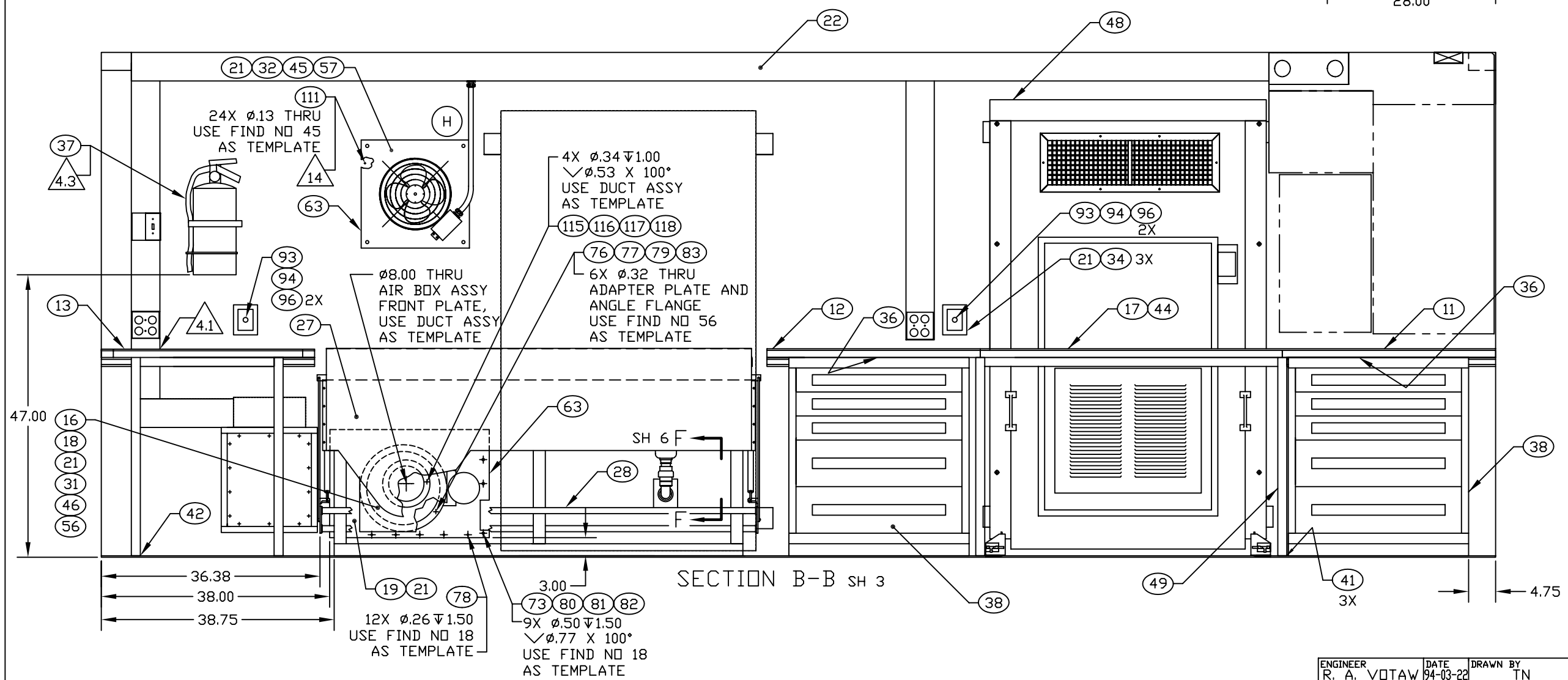

SECTION B-B SH 3

ENGINEER	DATE	DRAWN BY	DATE	SIZE	CAGE CODE	DWG NO	REV
R. A. VOTAW	94-03-22	TN	96-08-27	D	91145	MFGM020401	H
NEXT ASSEMBLY		CHECKER					
FINAL		MAB	94-04-06	SCALE 1/10		SH 4	