REVISION HISTORY				
REV	DESCRIPTION		DATE	APPROVAL
A	(2) ITEM DELETED.	MAB	00-05-23	R A VOTAW
B	(1) ITEM ADDED.	MAB	00-08-23	R A VOTAW
C	(1) ITEM ADDED. (3) NOTE ADDED.	MAB	01-10-03	R A VOTAW

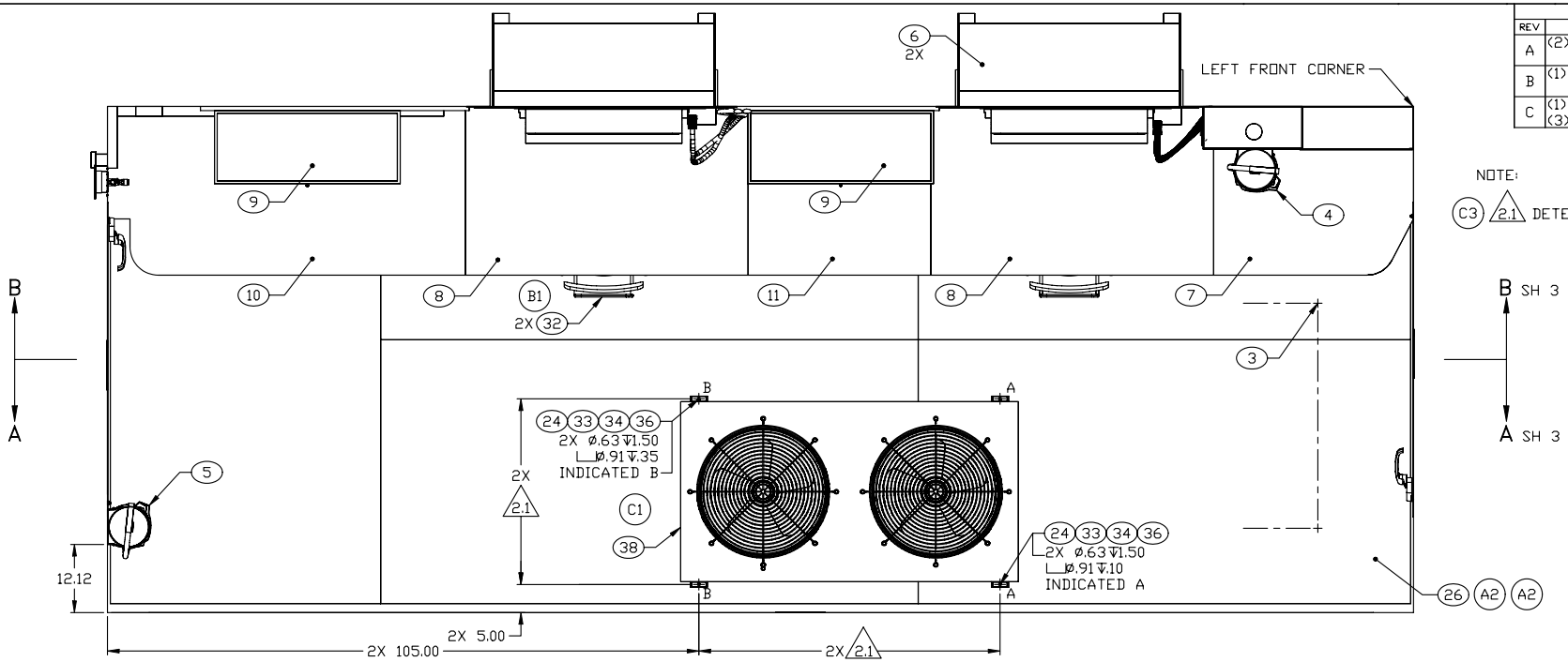

FLOOR PLAN

NOTE:

C3 2.1 DETERMINE AT TIME OF INSTALLATION.

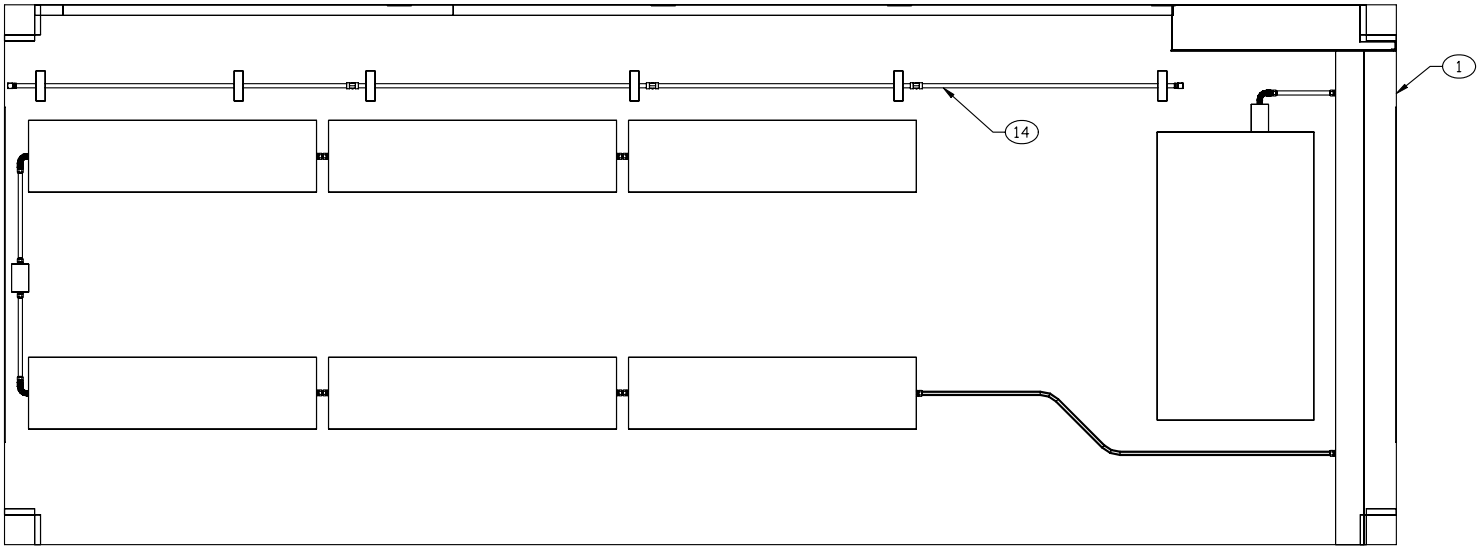

CEILING PLAN

ENGINEER	DATE	DRAWER	DATE	SIZE	CAGE CODE	DRAWING NUMBER	REV
T NGUYEN	99-10-27	TN	01-10-02	D	91145	MFFA020101	C
NEXT ASSEMBLY		CHECKER		SCALE		SHEET	
FINAL		MAB	99-10-27	1/11		2	

REVISION HISTORY			
REV	DESCRIPTION	DATE	APPROVAL
B	(1) ITEM ADDED. MAB	00-08-23	R A VOTAW
C	(1) ITEM ADDED. MAB	01-10-03	R A VOTAW

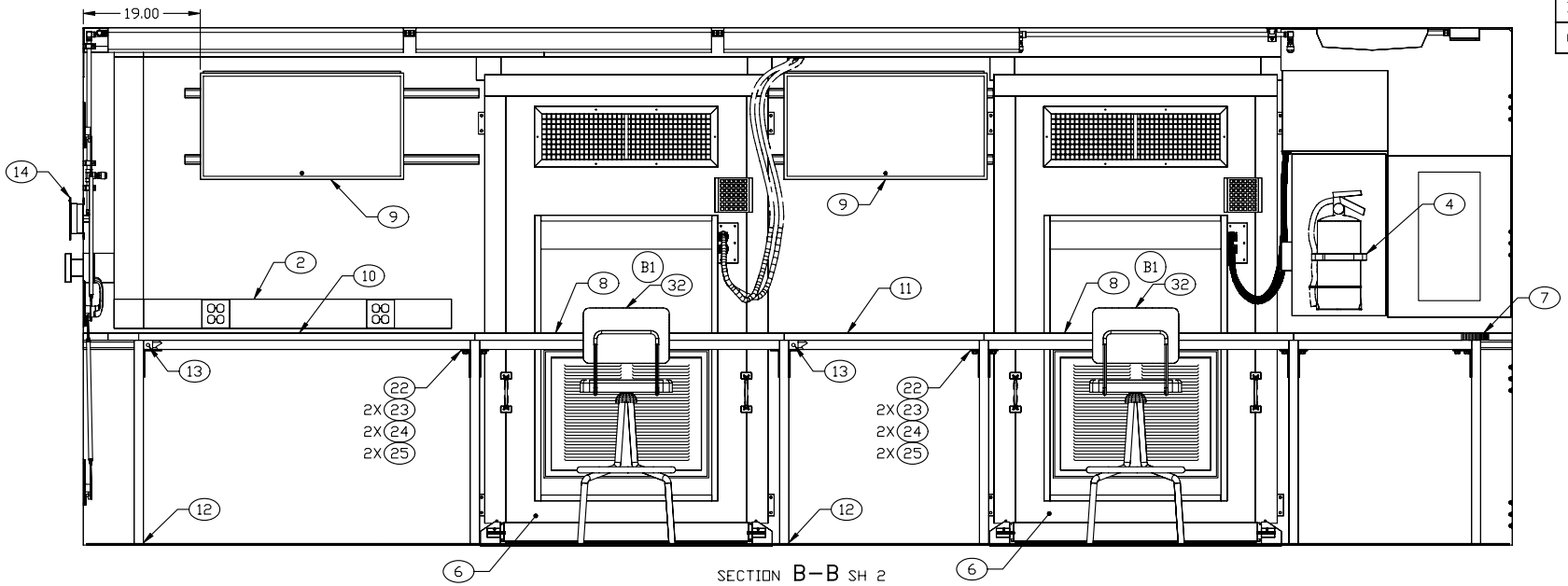

SECTION B–B SH 2

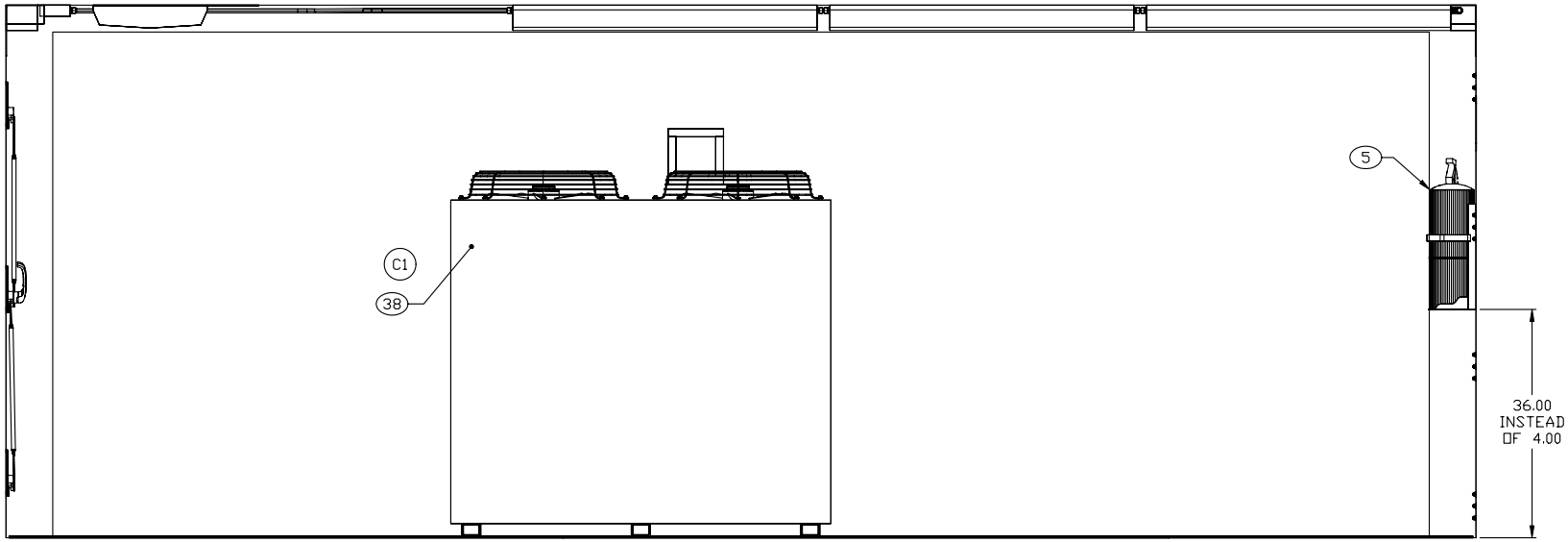

SECTION A–A SH 2
ROTATED 180°

ENGINEER	DATE	DRAWER	DATE	SIZE	CAGE CODE	DRAWING NUMBER	REV
T NGUYEN	99-10	TN	01-10-02	D	91145	MFFA020101	C
NEXT ASSEMBLY		CHECKER		SCALE		SHEET	
FINAL		MAB	99-10-27	1/10		3	