REVISION HISTORY			
REV	DESCRIPTION	DATE	APPROVAL
C	REVISED AND PARTIALLY REDRAWN BY M. BEUSTER. (5) FIRE EXTINGUISHER MOVED.	2006-04-06	R A VOTAW

NOTES:

2.1 REMOVE AND REINSTALL FOUR LIGHT FIXTURES AS SHOWN.

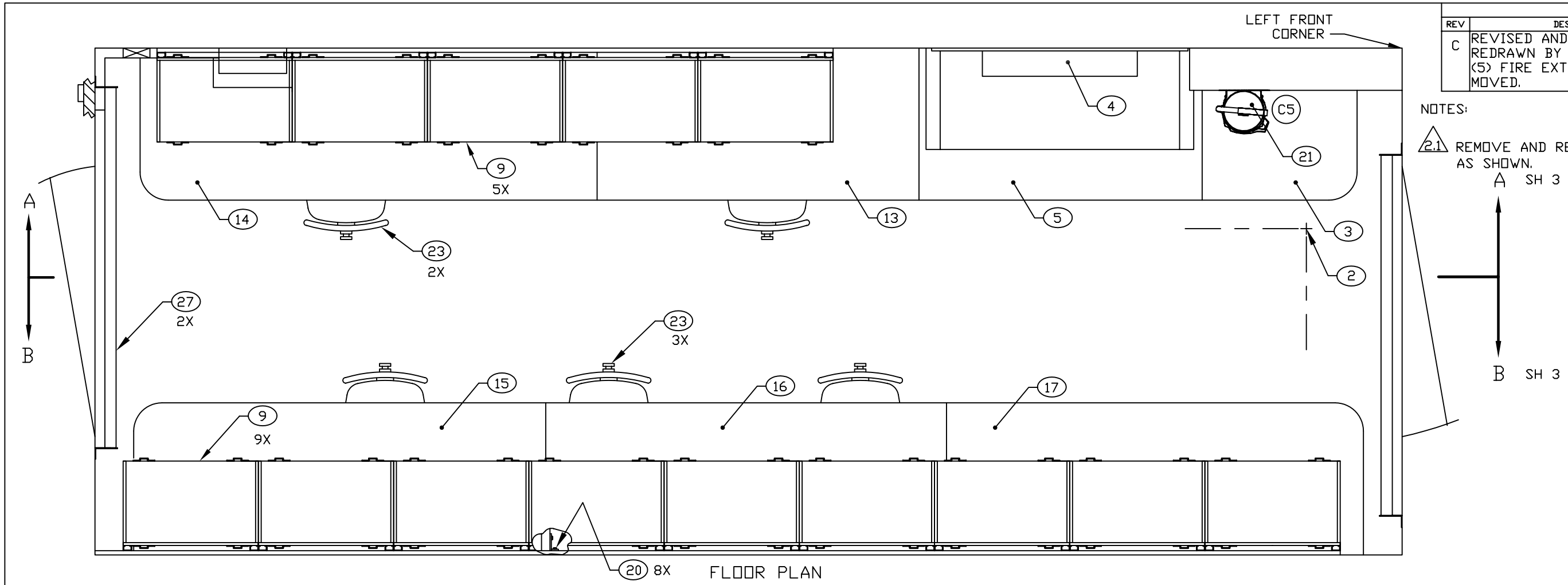

FLOOR PLAN

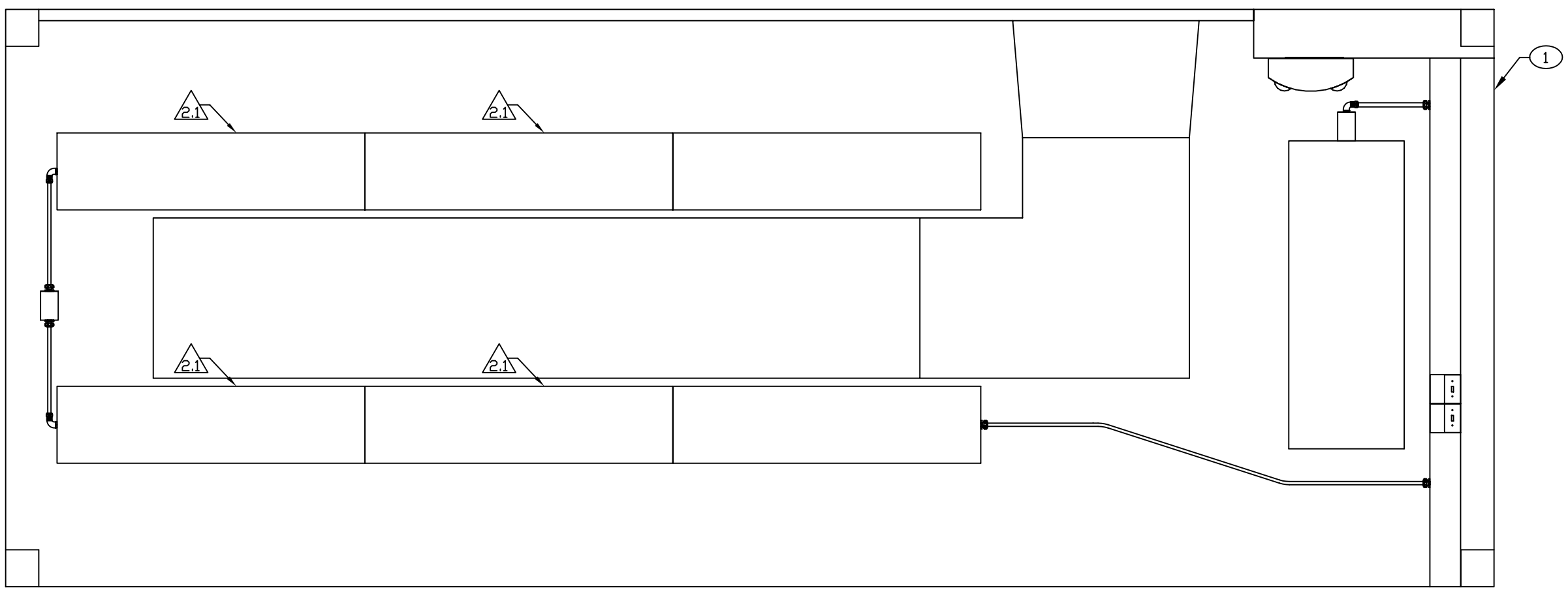

CEILING PLAN

ENGINEER	DATE	DRAWN BY	DATE	SIZE	CAGE CODE	DWG NO	REV
BEUSTER	82-10-08	T. DUNN	82-10-12	D	91145	MFCY010101	C
NEXT ASSEMBLY		CHECKER					
FINAL		D. SIDDENS	83-09-13	SCALE 1/10		SH 2	

REVISION HISTORY			
REV	DESCRIPTION	DATE	APPROVAL
C	REVISED AND PARTIALLY REDRAWN BY M. BEUSTER. (5) FIRE EXTINGUISHER MOVED.	2006-04-06	R A VOTAW

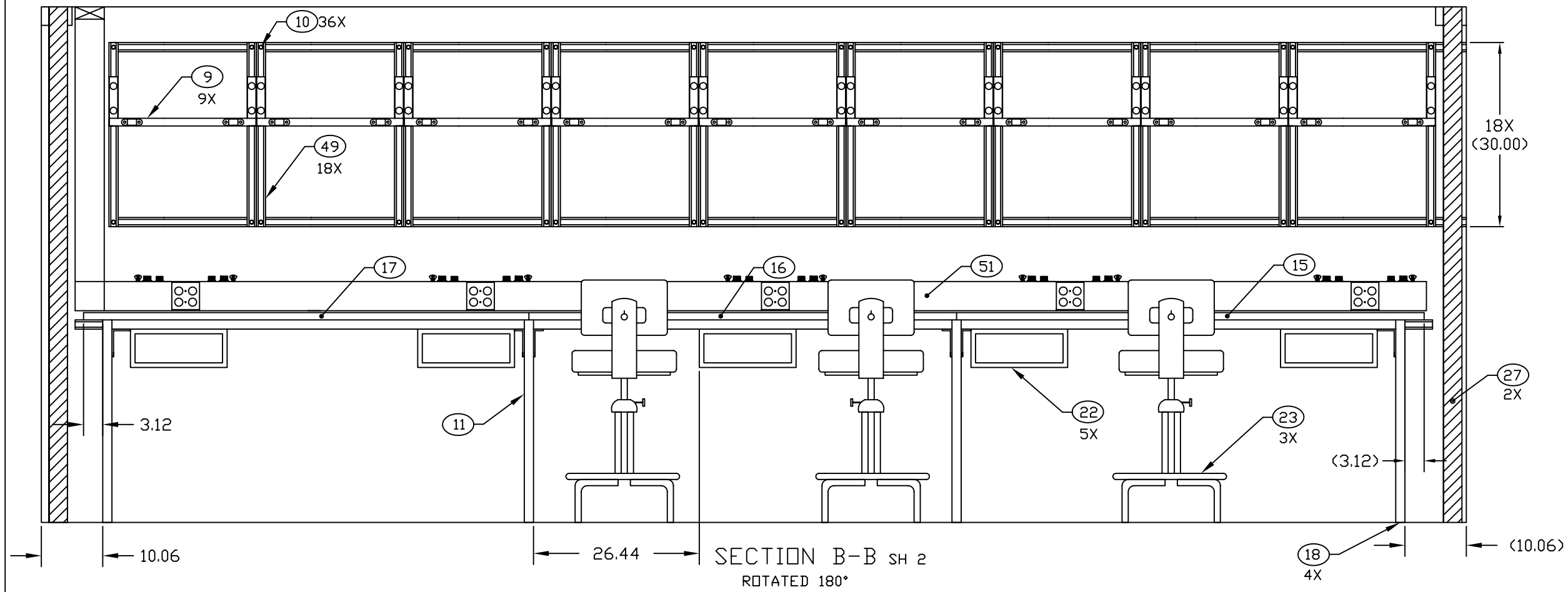

SECTION B-B SH 2
ROTATED 180°

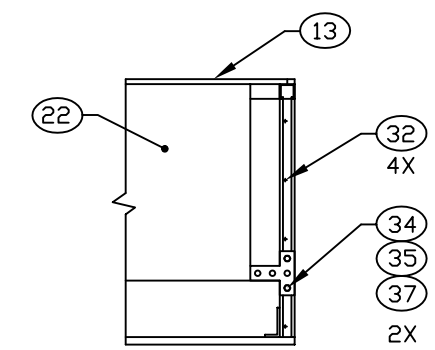

SECTION C-C

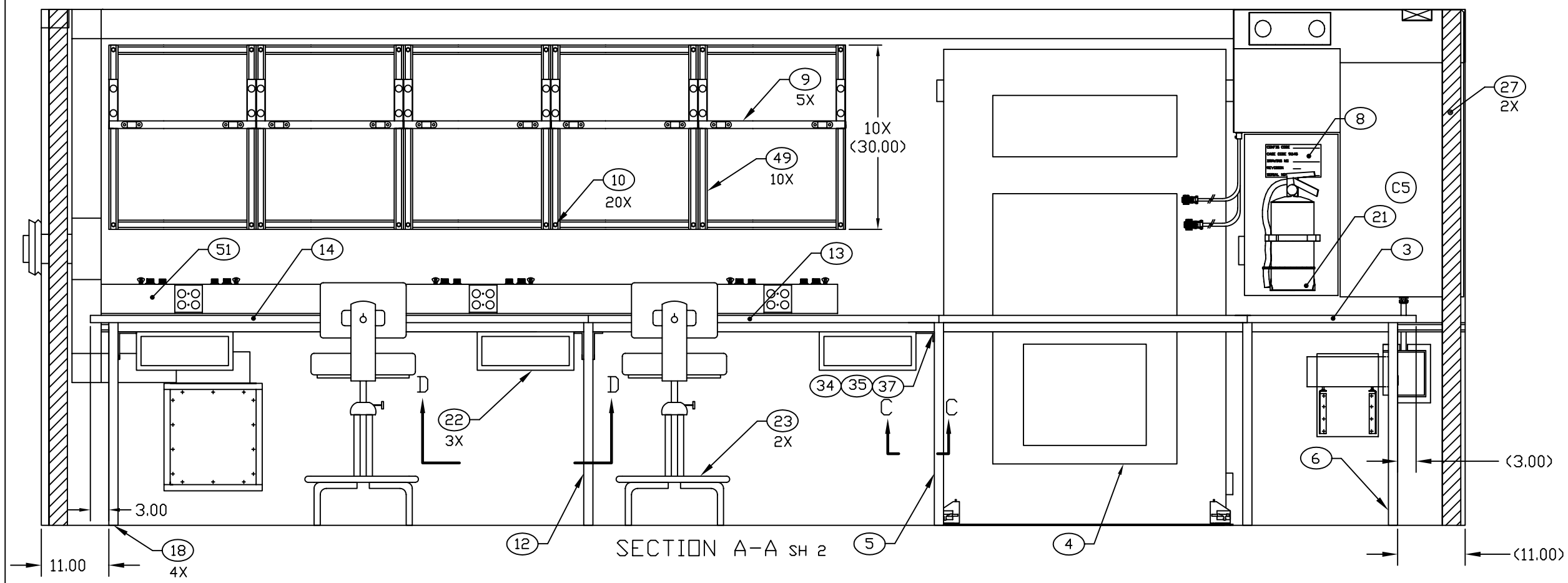

SECTION A-A SH 2

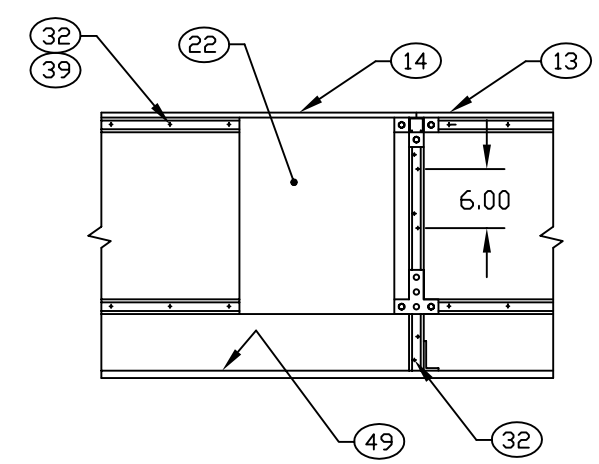

SECTION D-D
TYPICAL COUNTERTOP INSTALLATION

ENGINEER	DATE	DRAWN BY	DATE	SIZE	CAGE CODE	DWG NO	REV
DELEON	82-10-08	T. DUNN	82-10-12	D	91145	MFCY010101	C
NEXT ASSEMBLY		CHECKER		SCALE		SH	
FINAL		D. SIDDENS	83-09-13	1/10		3	