REVISION HISTORY			
REV	DESCRIPTION	DATE	APPROVAL
C	REVISED AND PARTIALLY REDRAWN BY T H NGUYEN.	02-11-07	R VOTAW

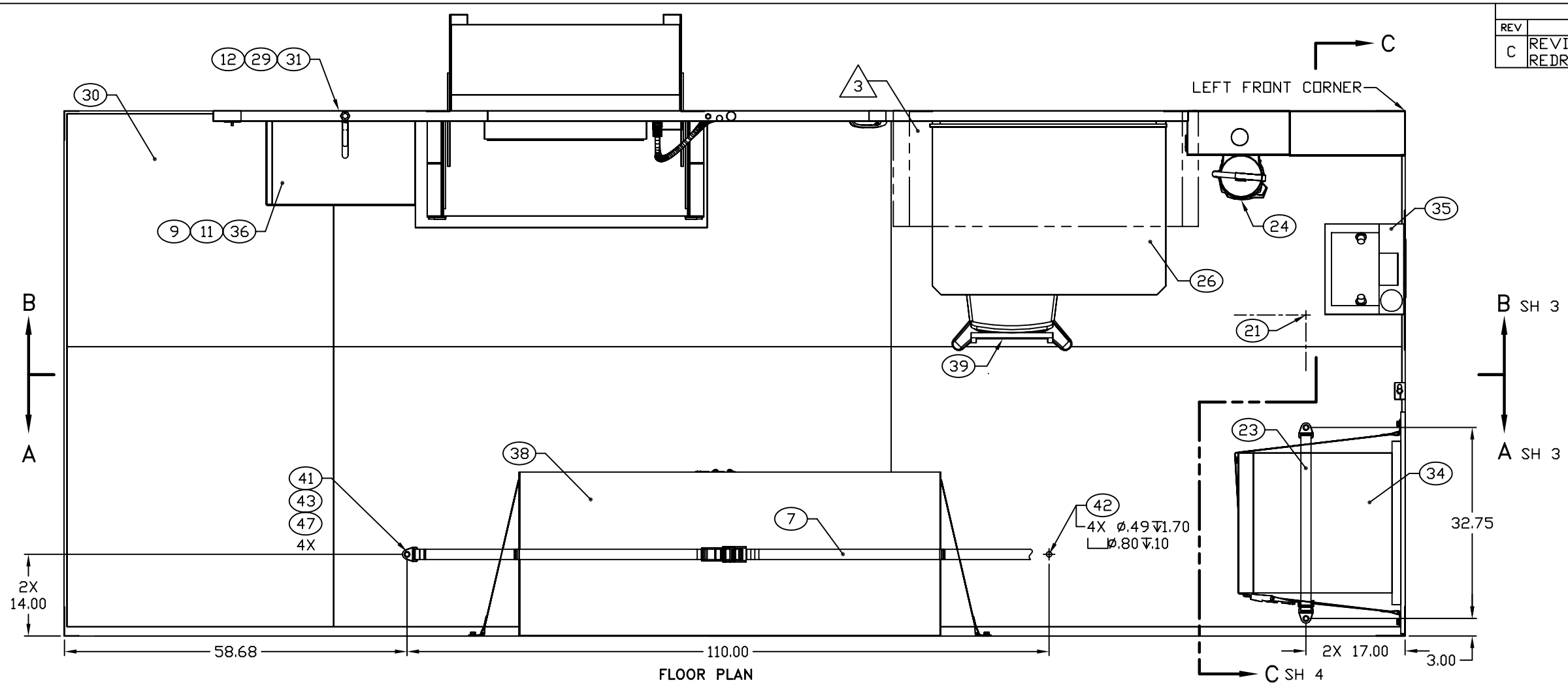

FLOOR PLAN

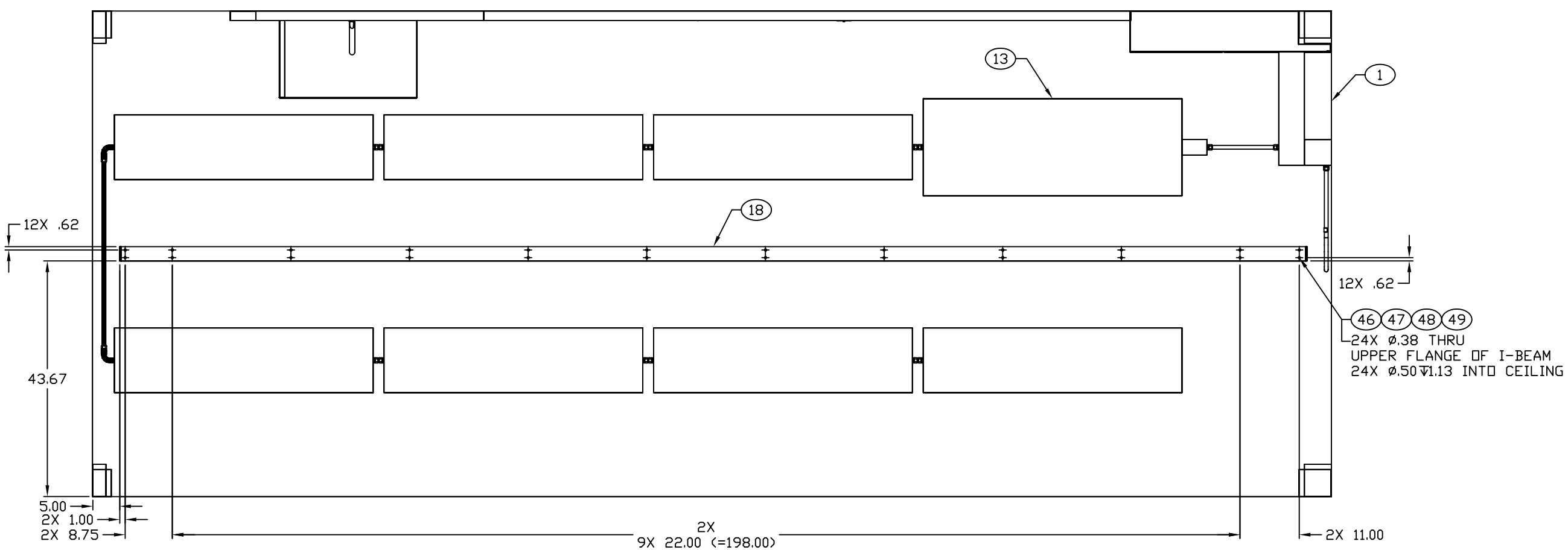

CEILING PLAN

ENGINEER	DATE	DRAWER	DATE	SIZE	CAGE CODE	DRAWING NUMBER	REV
R VOTAW	92-04-07	TN	96-08-30	D	91145	MFCS030401	C
NEXT ASSEMBLY		CHECKER		SCALE		SHEET	
FINAL		MAB	92-06-04	1/11		2	

REVISION HISTORY			
REV	DESCRIPTION	DATE	APPROVAL
C	REVISED AND PARTIALLY REDRAWN BY T H NGUYEN.	02-11-07	R VOTAW

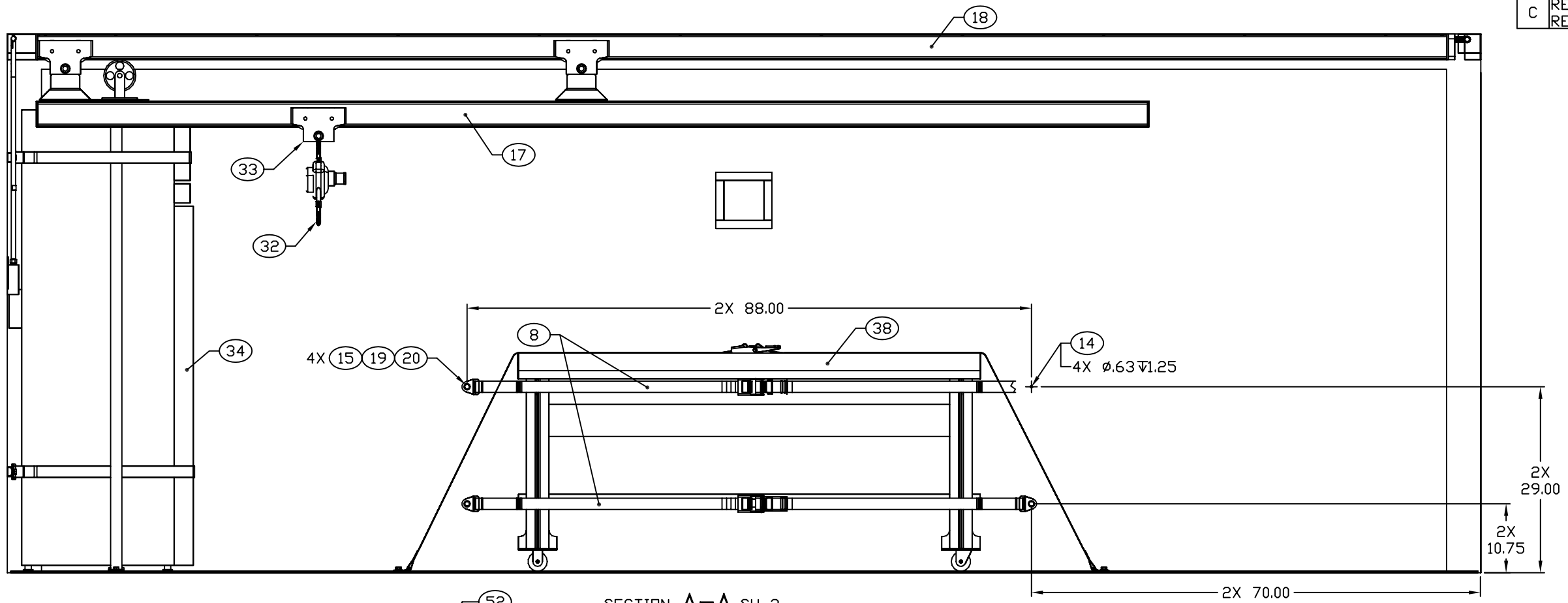

SECTION A–A SH 2
ROTATED 180°

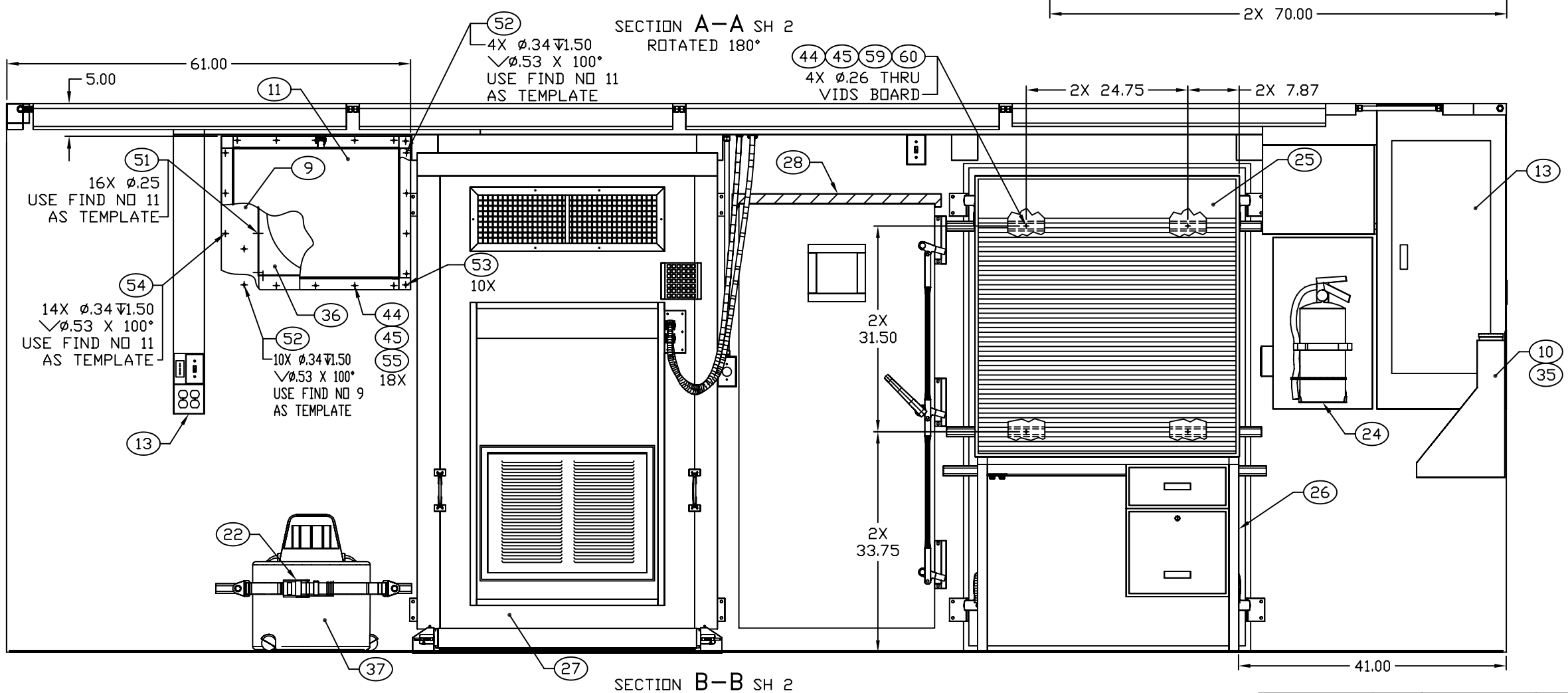

SECTION B–B SH 2
CHAIR NOT SHOWN

ENGINEER	DATE	DRAWER	DATE	SIZE	CAGE CODE	DRAWING NUMBER	REV
R VOTAW	92-04-07	TN	96-08-30	D	91145	MFCS030401	C
NEXT ASSEMBLY		CHECKER		SCALE		SHEET	
FINAL		MAB	92-06-04	1/10		3	