REVISION HISTORY			
REV	DESCRIPTION	DATE	APPROVAL
D	REVISED AND PARTIALLY REDRAWN BY T H NGUYEN. (6) DOWNDRAFT BENCHES RELOCATED. (7) EMERGENCY LIGHT ADDED.	04-10-25	R VOTAW

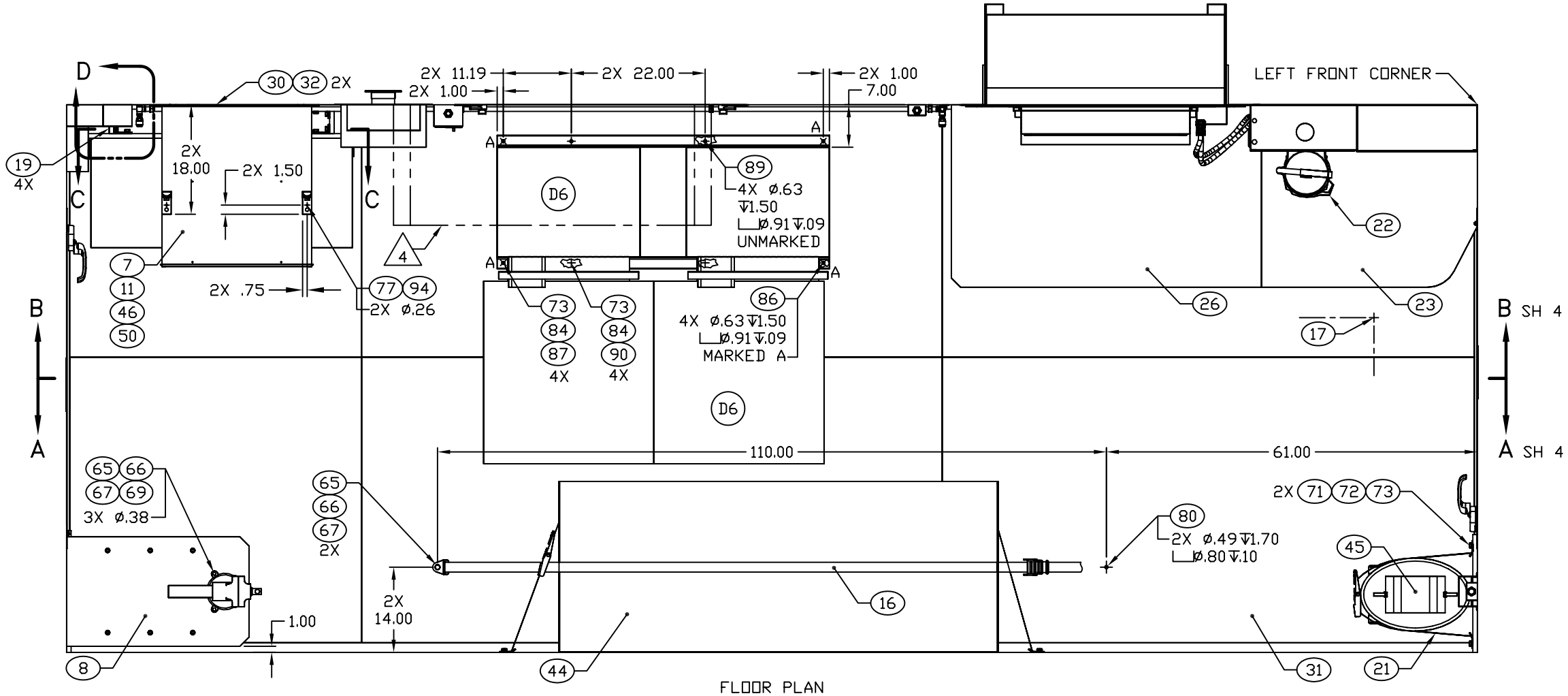

FLOOR PLAN

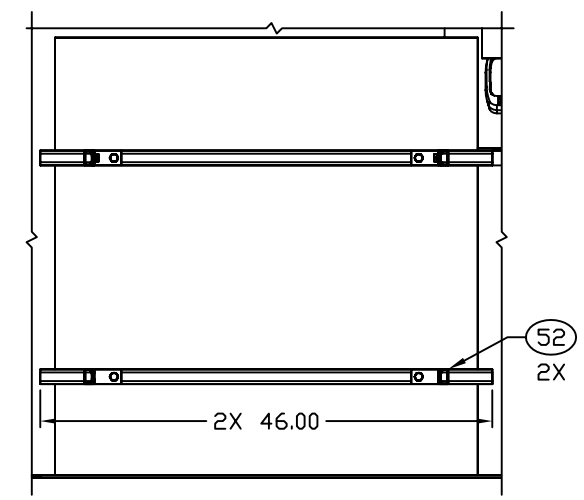

SECTION C–C
ROTATED 180°
SCALE 1/10

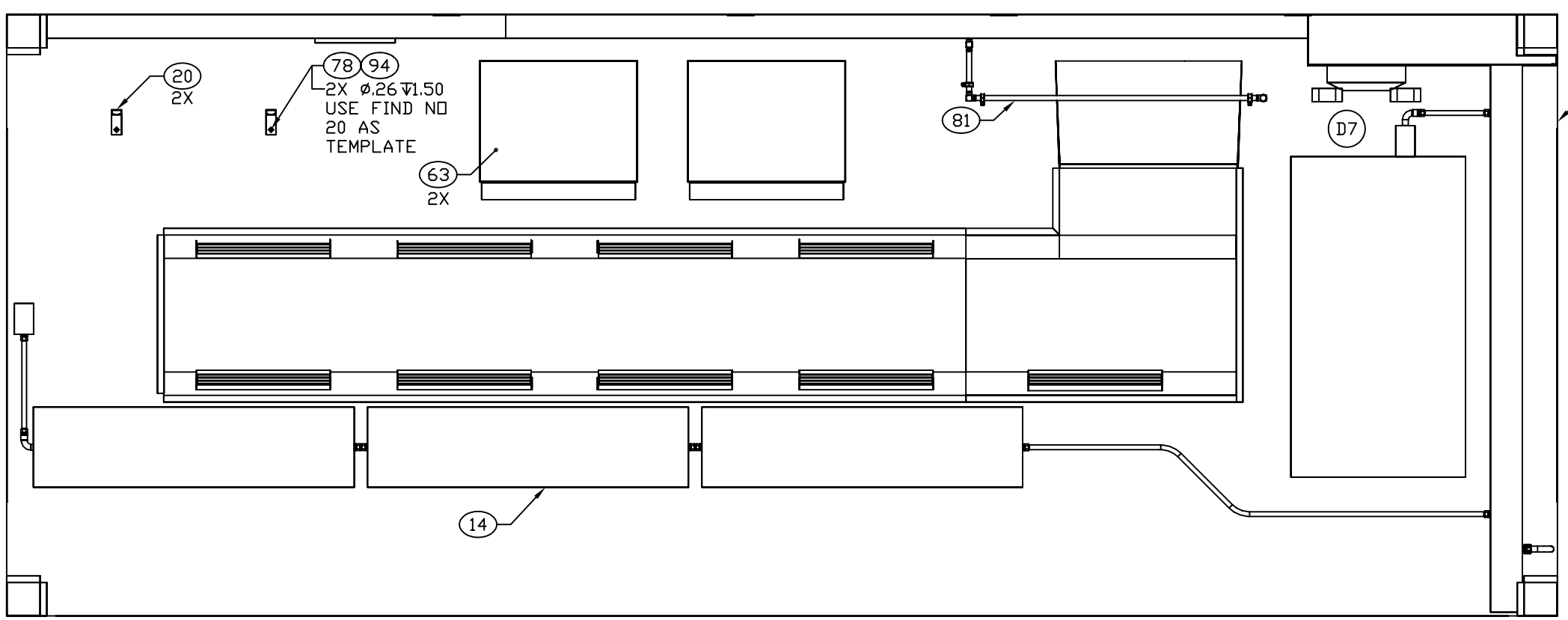

CEILING PLAN

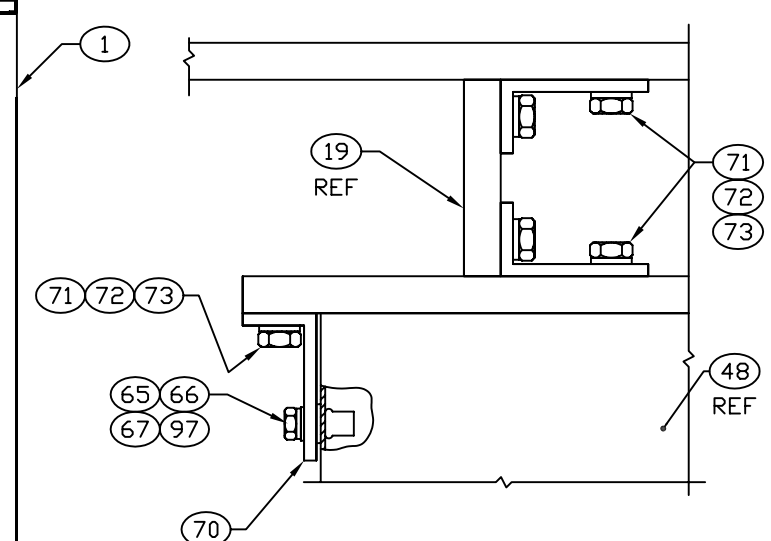

VIEW D
2X AS SHOWN
2X OPPOSITE
AIRLINE AND ELECTRICAL
INSTALLATION NOT SHOWN
SCALE 1/2

ENGINEER	DATE	DRAWER	DATE	SIZE	CAGE CODE	DRAWING NUMBER	REV
R VOTAW	92-04-07	TN	97-04-08	D	91145	MFCS020401	D
NEXT ASSEMBLY		CHECKER		SCALE		SHEET	
FINAL		MAB	94-05-17	1/11		3	

REVISION HISTORY			
REV	DESCRIPTION	DATE	APPROVAL
D	REVISED AND PARTIALLY REDRAWN BY T H NGUYEN. (3) ITEM ADDED. (6) DOWNDRAFT BENCH RELOCATED. (7) EMERGENCY LIGHT ADDED.	04-10-25	R VOTAW

NOTES:

4.1 MEASURE FROM TOP OF FLOOR PLATES.

4.2 PLACE DOWNDRAFT BENCH UNITS BACK-TO-BACK, FILTER TRAY OPENINGS FACING TOWARD MF DOORS.

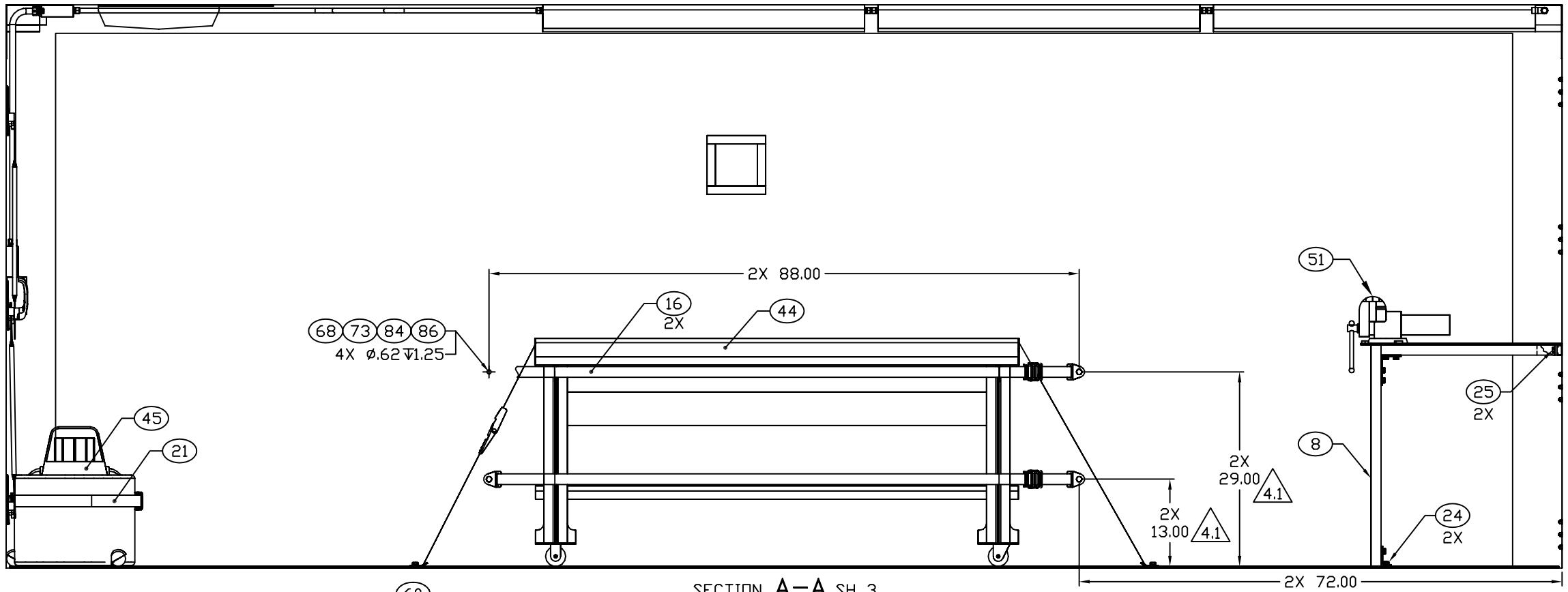

SECTION A–A SH 3
ROTATED 180°

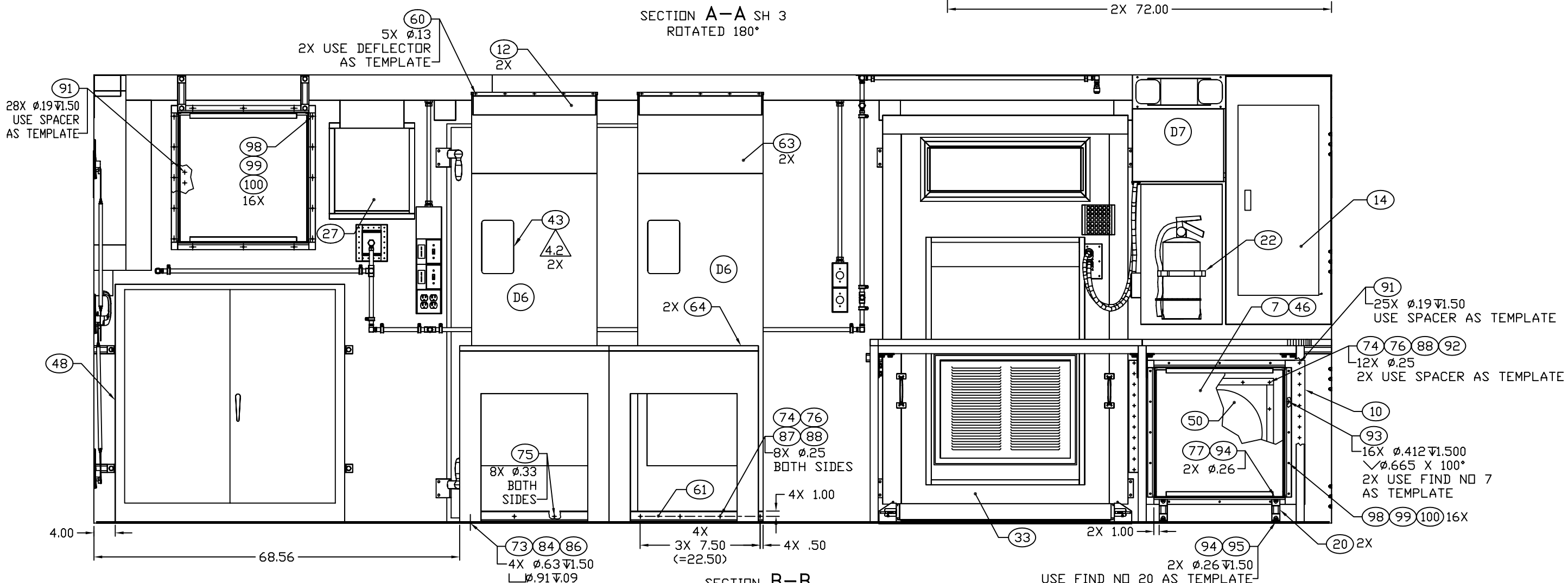

SECTION B–B
SH 3

ENGINEER	DATE	DRAWER	DATE	SIZE	CAGE CODE	DRAWING NUMBER	REV
R VOTAW	92-04-07	TN	97-04-08	D	91145	MFCS020401	D
NEXT ASSEMBLY		CHECKER		SCALE		SHEET	
FINAL		MAB	94-05-17	1/10		4	