REVISION HISTORY			
REV	DESCRIPTION	DATE	APPROVAL

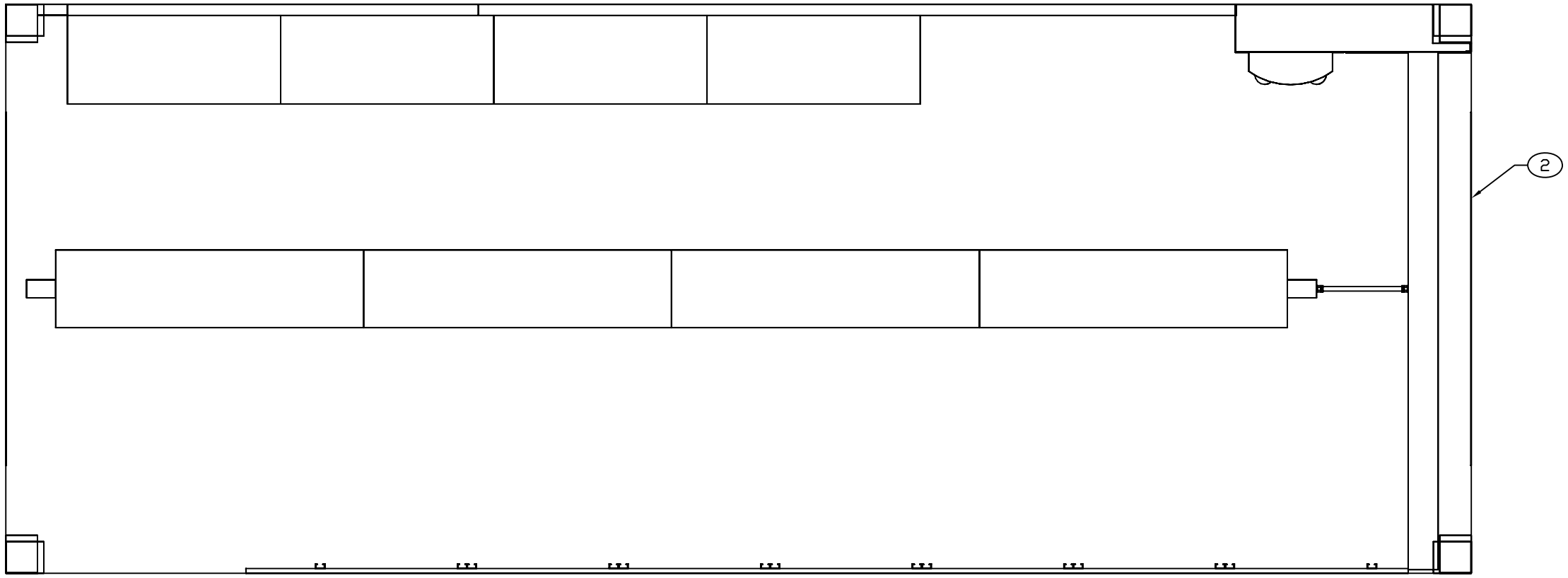

-3 CEILING PLAN

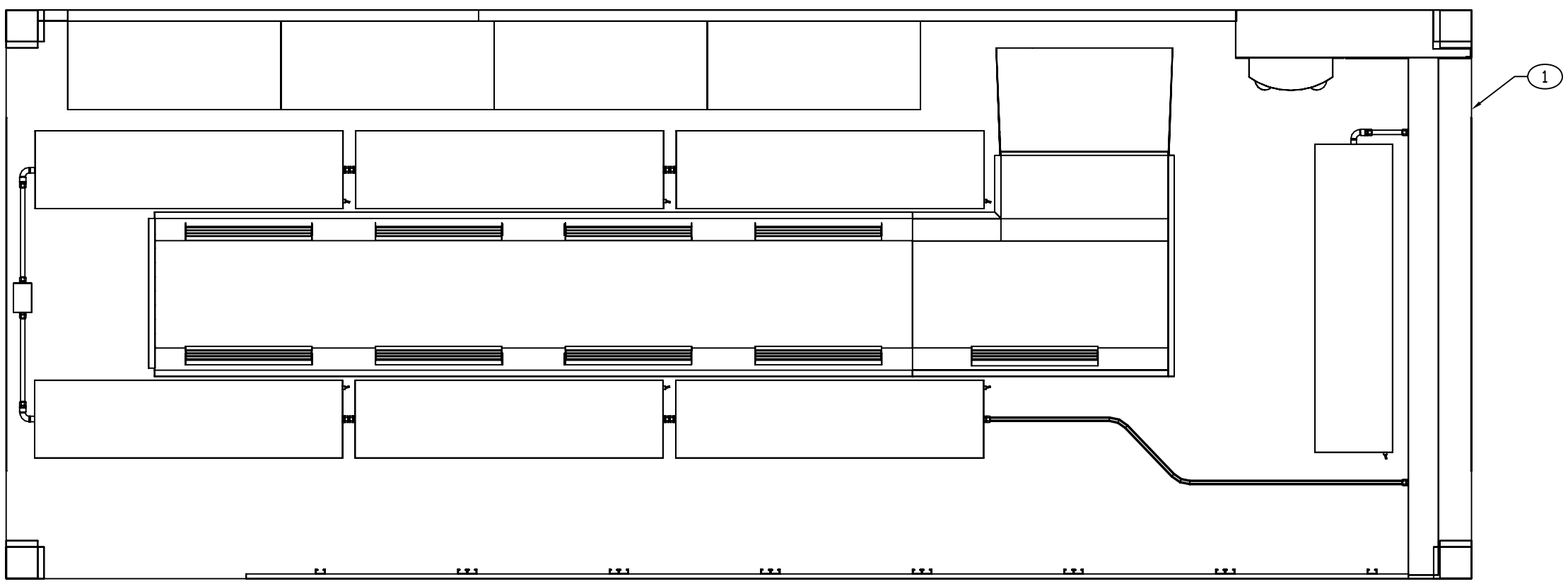

-1 CEILING PLAN

ENGINEER	DATE	DRAWER	DATE	SIZE	CAGE CODE	DRAWING NUMBER	REV
T NGUYEN	07-09-17	TN	07-09-17	D	91145	MFCR030101	-
NEXT ASSEMBLY		CHECKER		SCALE		SHEET	
FINAL		MAB	07-09-17	1/11		3	

REVISION HISTORY			
REV	DESCRIPTION	DATE	APPROVAL

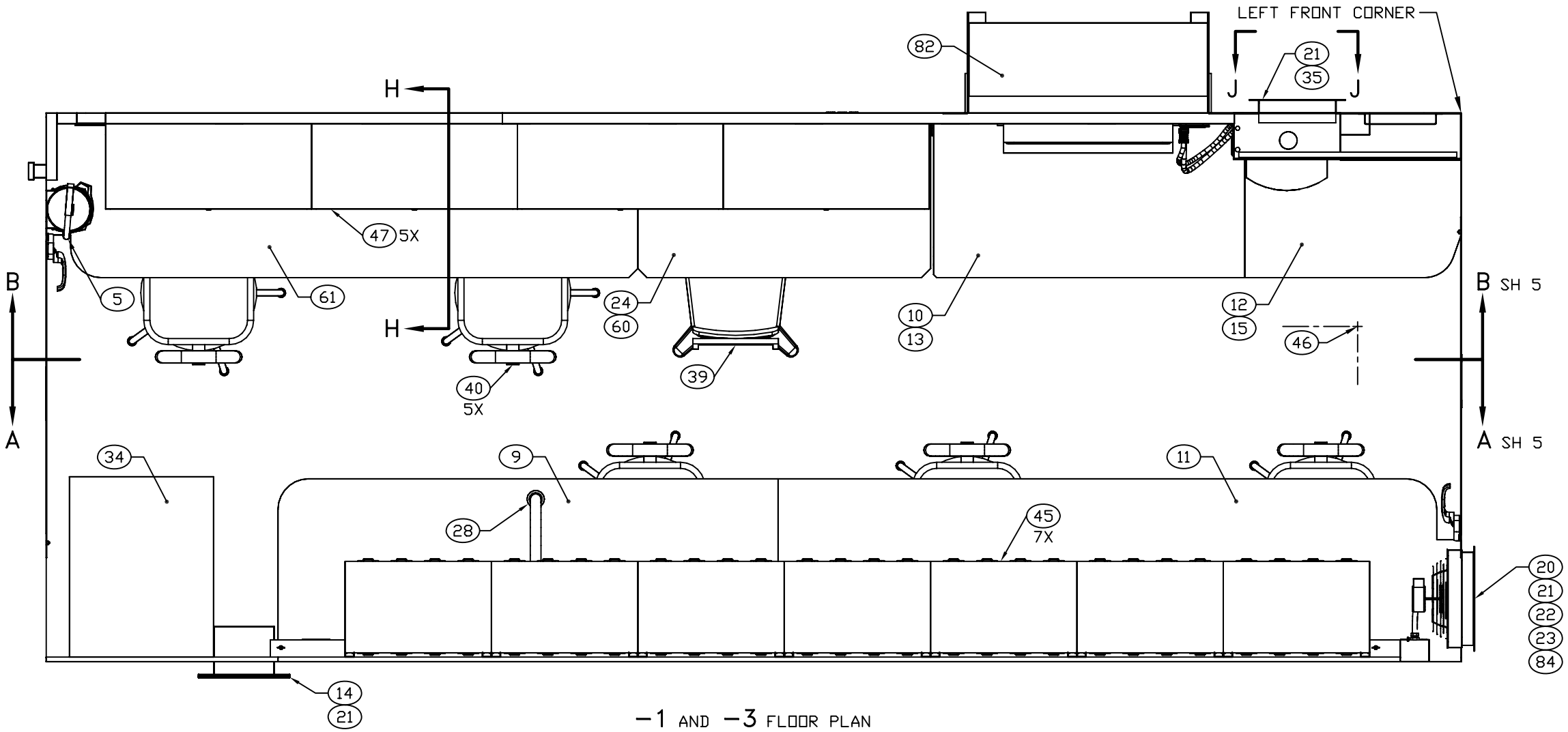

−1 AND −3 FLOOR PLAN

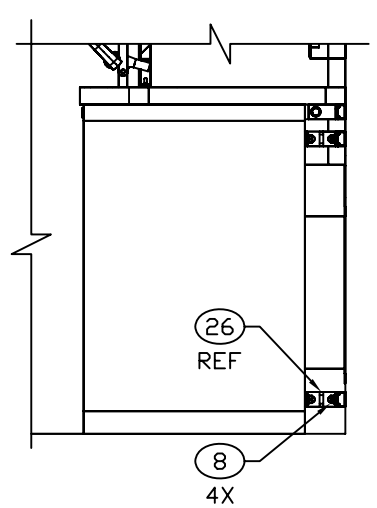

SECTION H−H
ROTATED 90° CW
SCALE 1/10

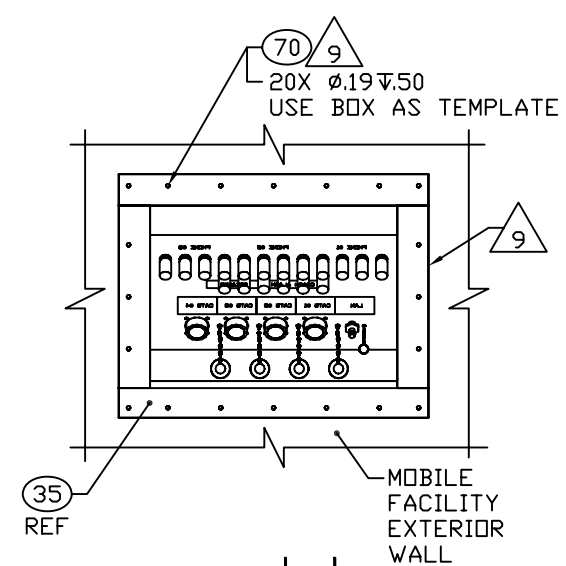

SECTION J−J
ROTATED 180°
SCALE 1/5

ENGINEER	DATE	DRAWER	DATE	SIZE	CAGE CODE	DRAWING NUMBER	REV
T NGUYEN	07-09-17	TN	07-09-17	D	91145	MFCR030101	−
NEXT ASSEMBLY		CHECKER		SCALE		SHEET	
FINAL		MAB	07-09-17	1/11		4	

REVISION HISTORY			
REV	DESCRIPTION	DATE	APPROVAL

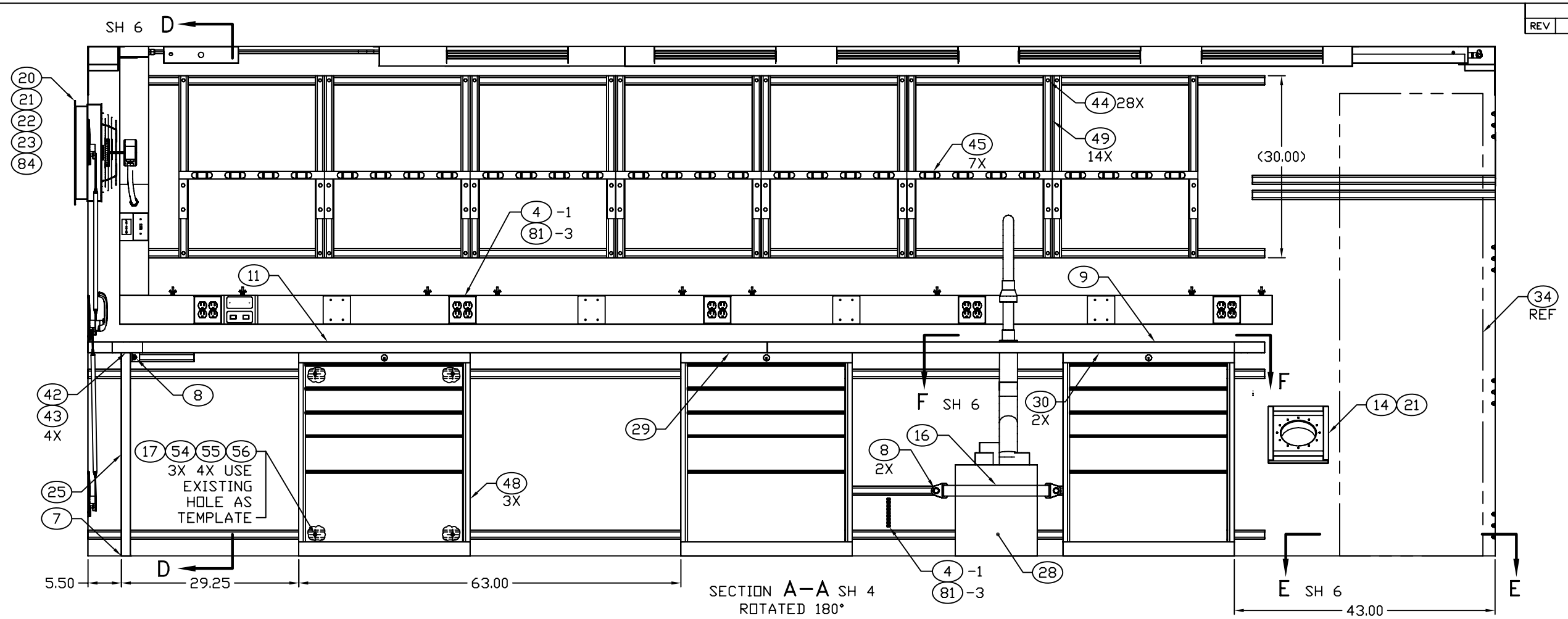

SECTION A–A SH 4
ROTATED 180°
CHAIRS NOT SHOWN

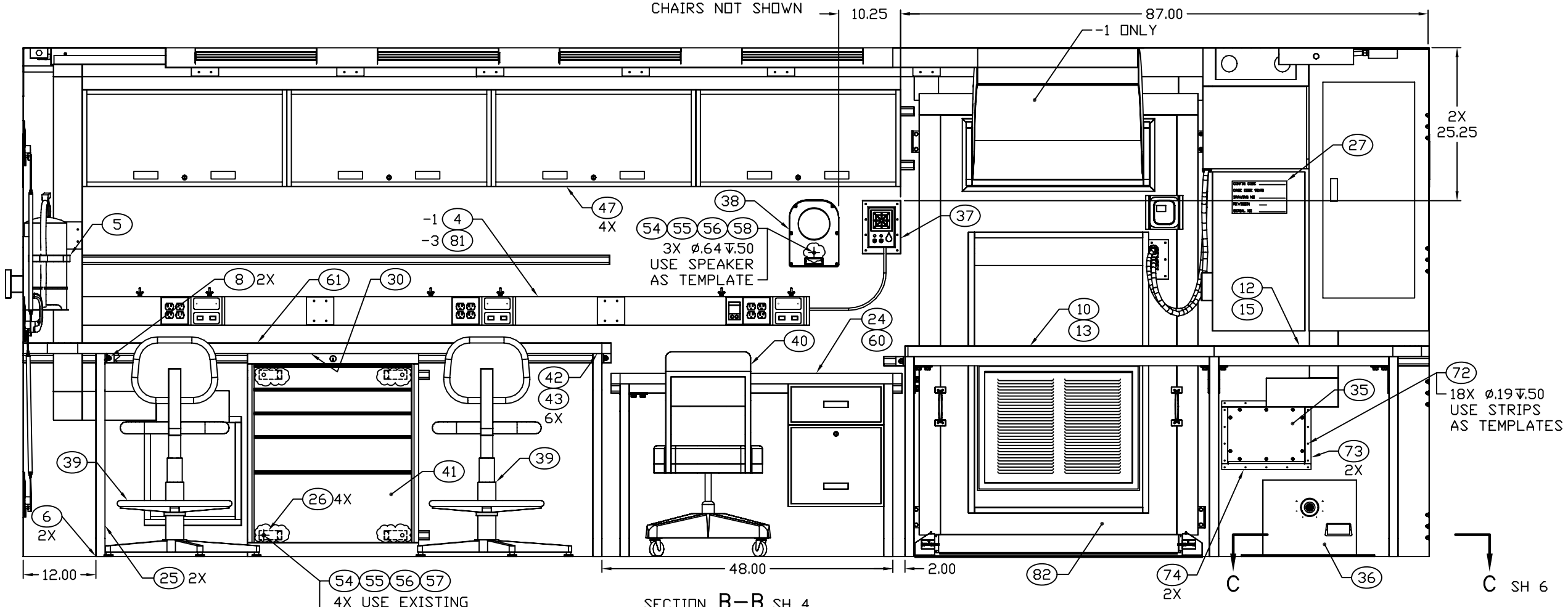

SECTION B–B SH 4

ENGINEER	DATE	DRAWER	DATE	SIZE	CAGE CODE	DRAWING NUMBER	REV
T NGUYEN	07-09-17	TN	07-09-17	D	91145	MFCR030101	–
NEXT ASSEMBLY		CHECKER		SCALE		SHEET	
FINAL		MAB	07-09-17	1/10		5	

REVISION HISTORY			
REV	DESCRIPTION	DATE	APPROVAL

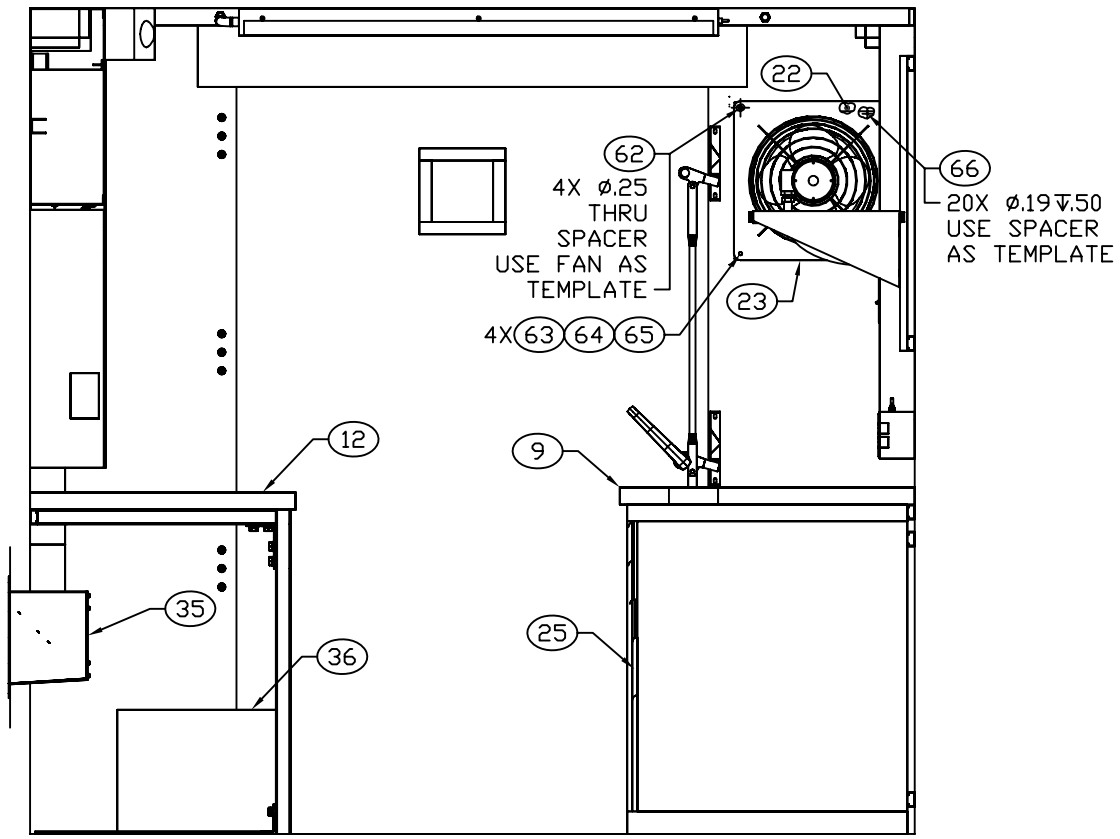

SECTION D–D SH 5
SCALE 1/10

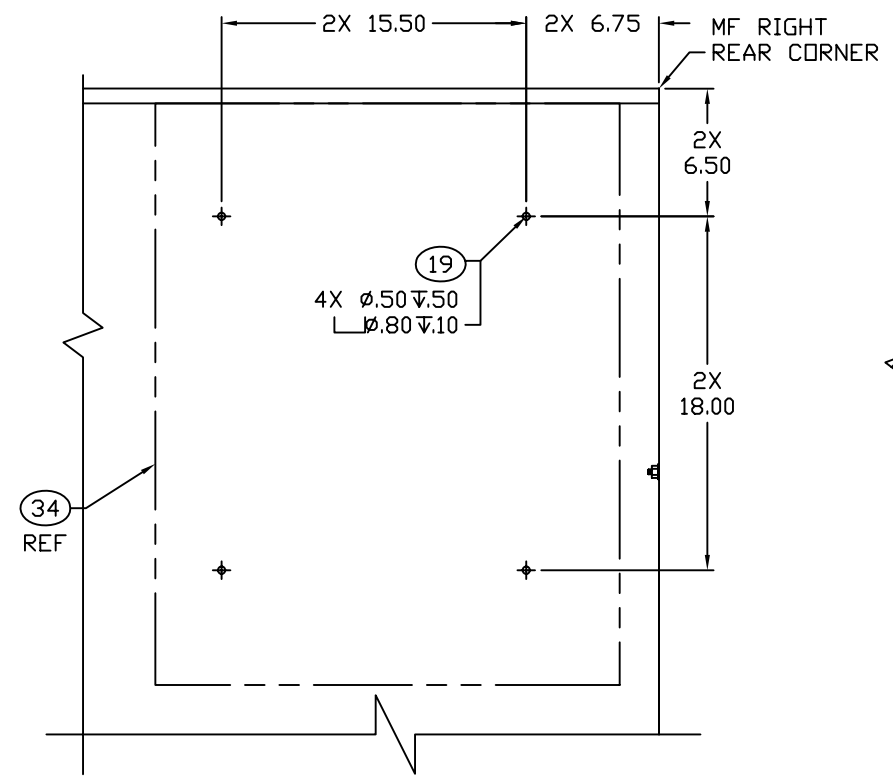

SECTION E–E SH 5

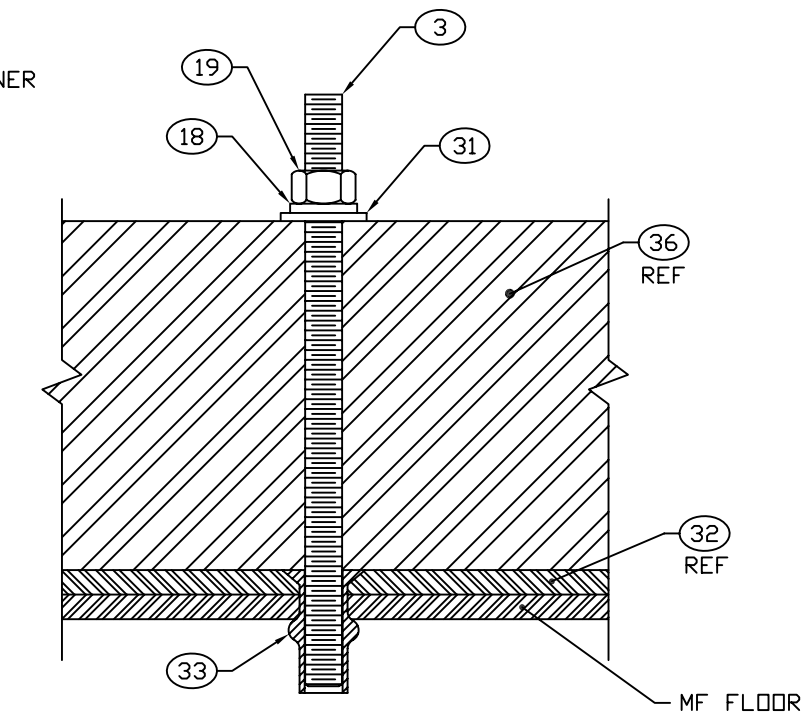

4X SECTION G–G
SCALE 1/1

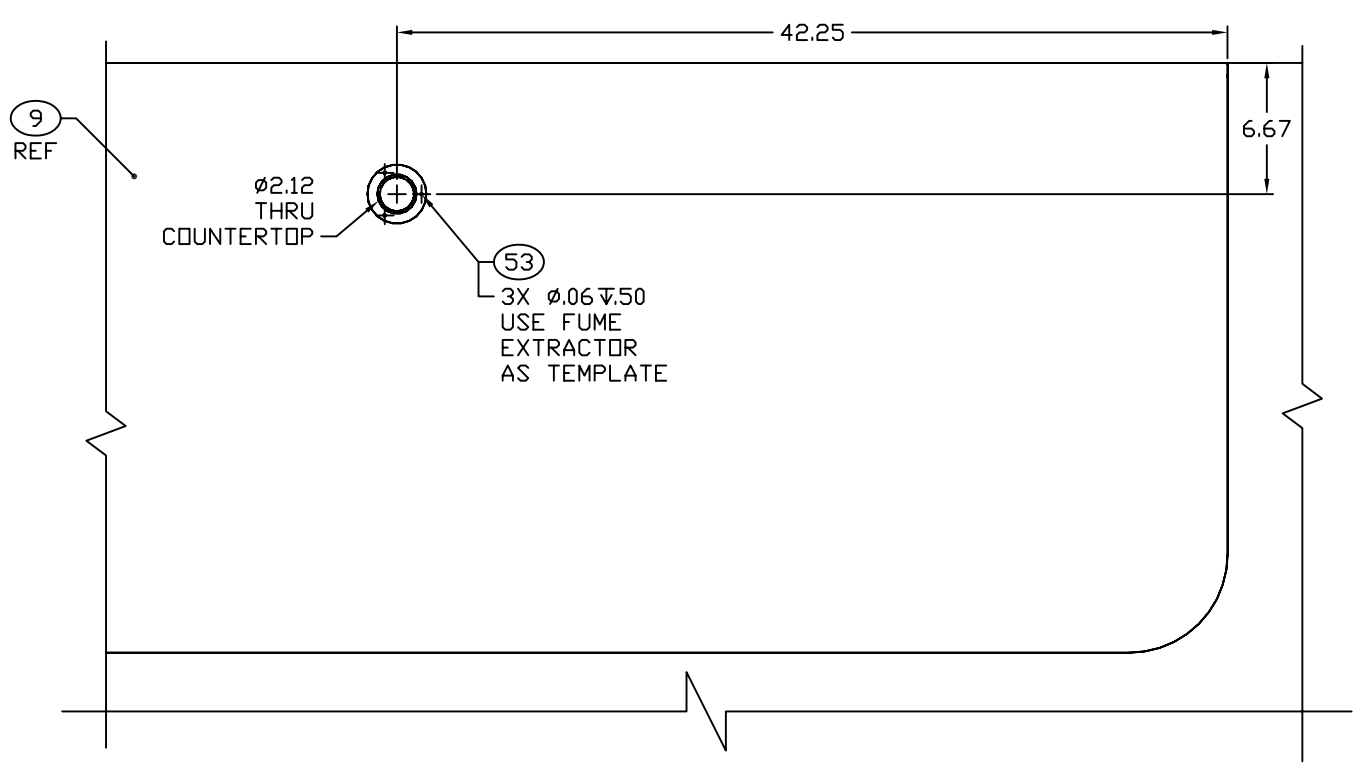

SECTION F–F SH 5

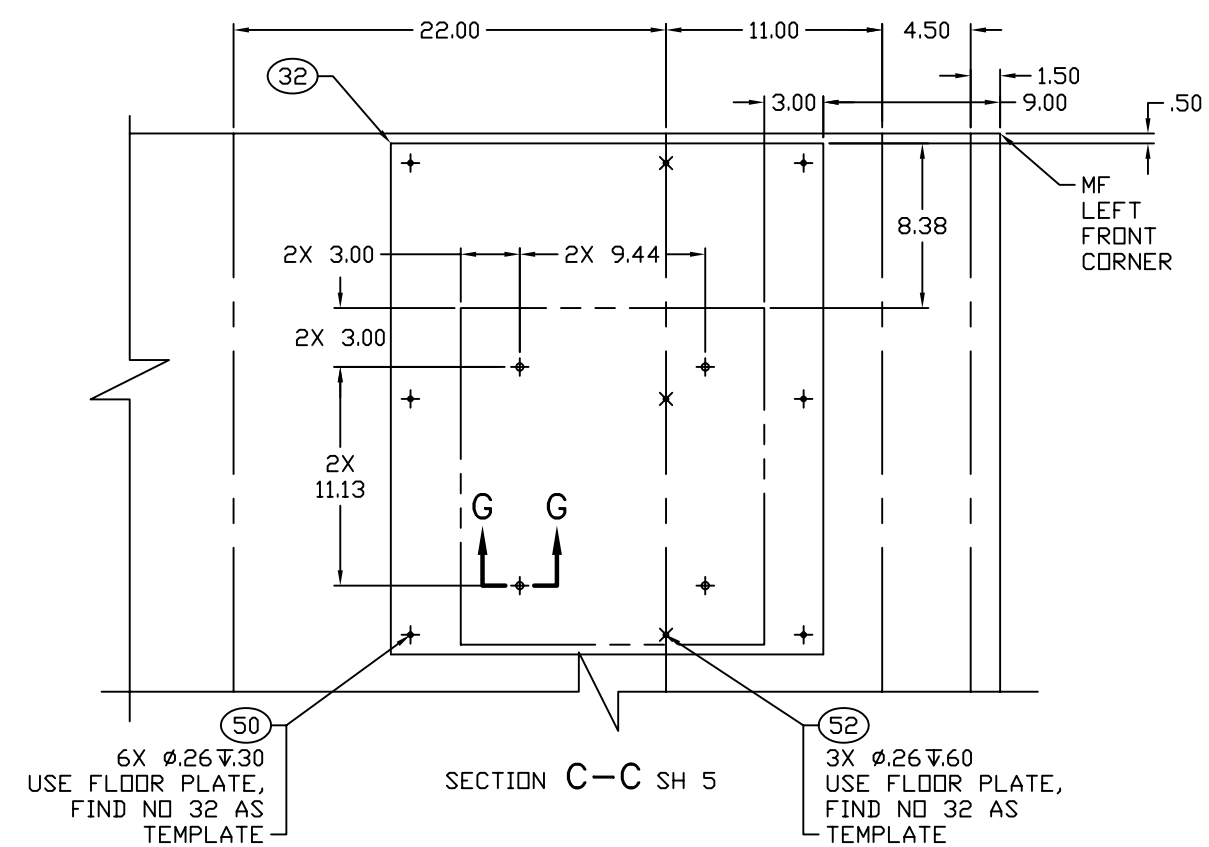

SECTION C–C SH 5

ENGINEER	DATE	DRAWER	DATE	SIZE	CAGE CODE	DRAWING NUMBER	REV
T NGUYEN	07-09-17	TN	07-09-17	D	91145	MFCR030101	–
NEXT ASSEMBLY		CHECKER		SCALE	1/5	SHEET	6
FINAL		MAB	07-09-17				