REVISION HISTORY			
REV	DESCRIPTION	DATE	APPROVAL
B	REVISED AND PARTIALLY REDRAWN BY T H NGUYEN.	03-04-08	R VOTAW

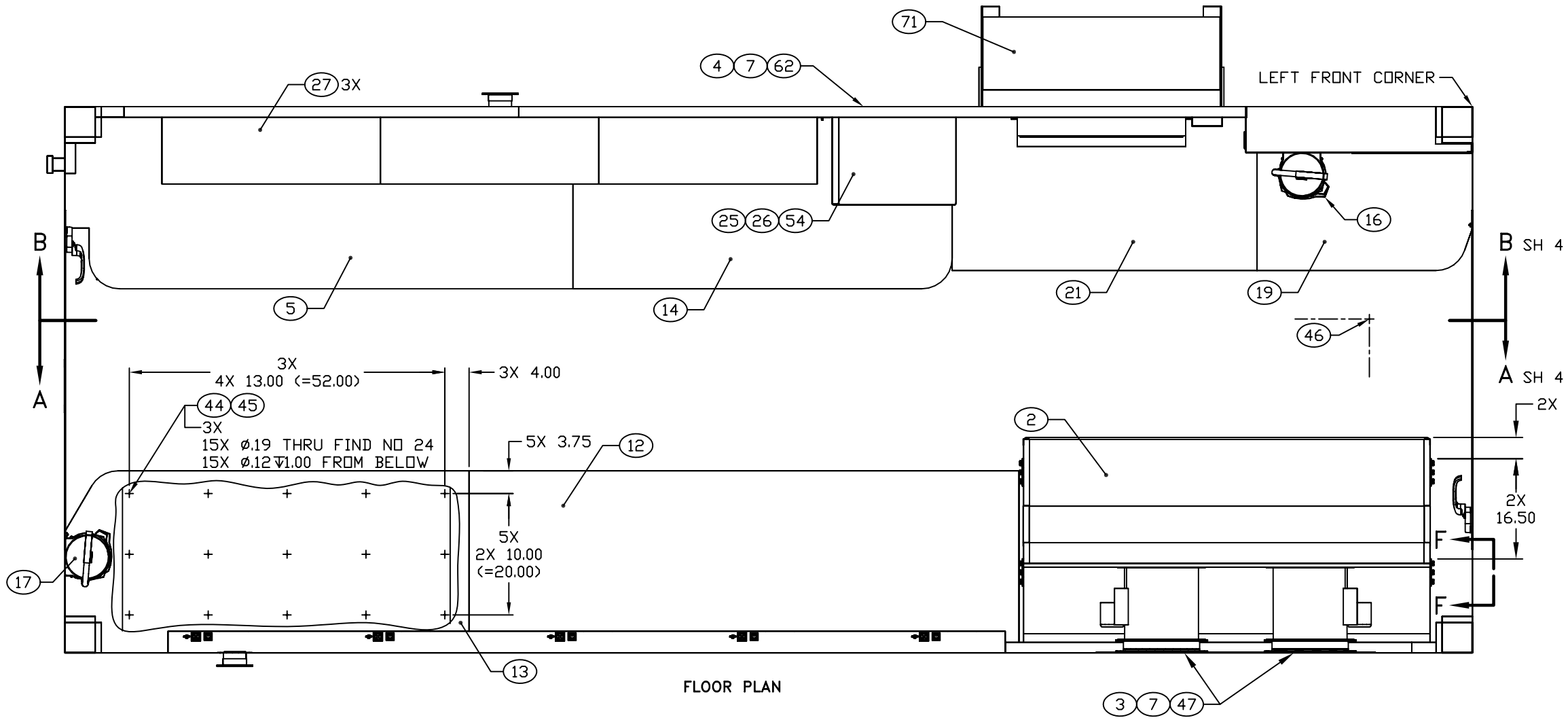

FLOOR PLAN

NOTES:

3.1 SEAL AROUND FLANGE, RINGS' EDGES, AND ALL CONTACTING SURFACE WITH FIND NO 81. DO NOT USE INSIDE DUCTING.

3.2 CUT TO FIT AT TIME OF INSTALLATION.

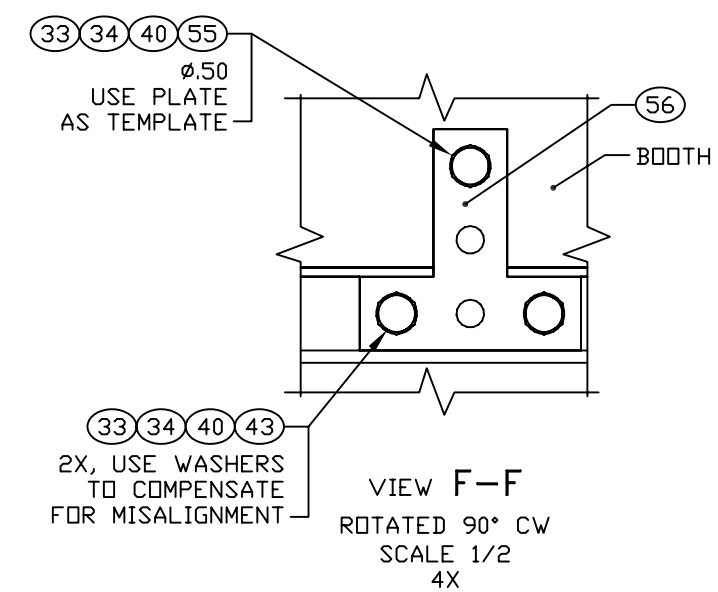

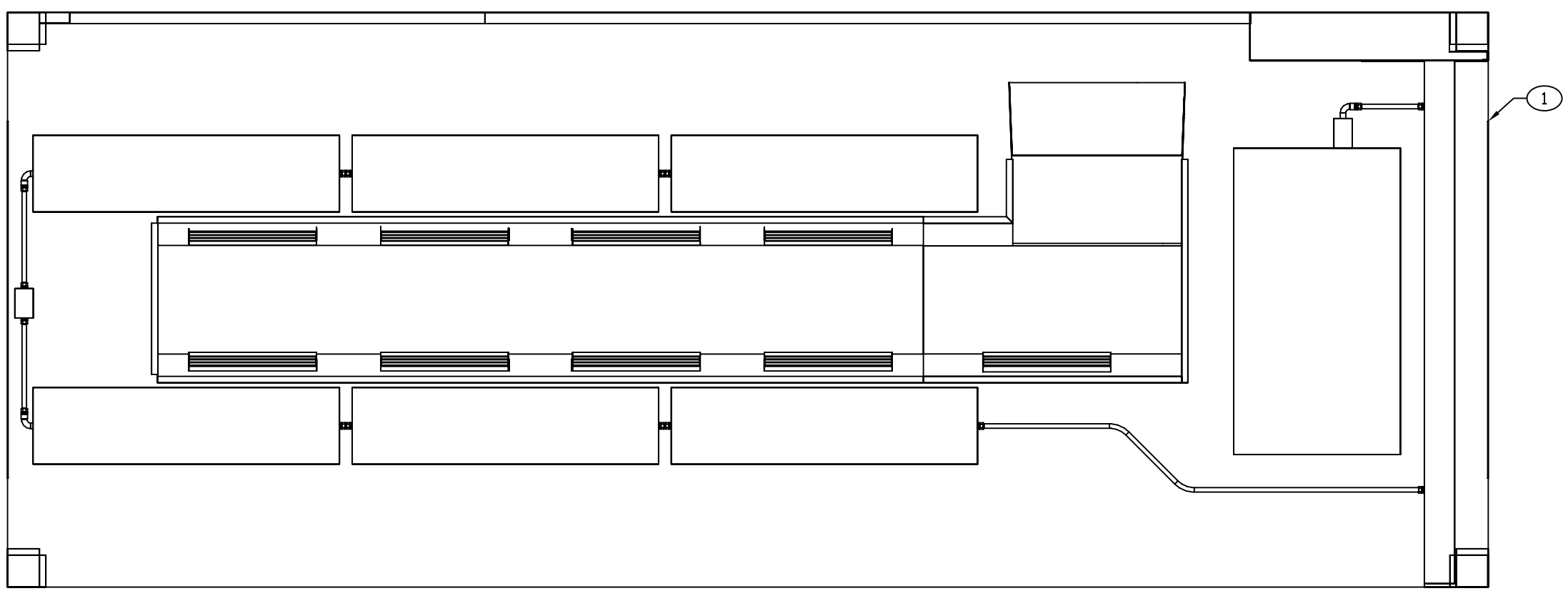

CEILING PLAN

ENGINEER	DATE	DRAWER	DATE	SIZE	CAGE CODE	DRAWING NUMBER	REV
R VOTAW	89-01-12	TN	98-01-05	D	91145	MFCL100101	B
NEXT ASSEMBLY		CHECKER		SCALE		SHEET	
FINAL		MAB	89-05-01	1/11		3	

REVISION HISTORY			
REV	DESCRIPTION	DATE	APPROVAL
B	REVISED AND PARTIALLY REDRAWN BY T H NGUYEN.	03-04-08	R VOTAW

NOTES:

4.1 CUT TO FIT DURING INSTALLATION.

4.2 BRACKET CENTER HOLE (ø.68) IS NOT REQUIRED. GAS FITTING IS CUSTOMER FURNISHED.

4.3 16X ø.25, USE FIND NO 26 AS TEMPLATE.

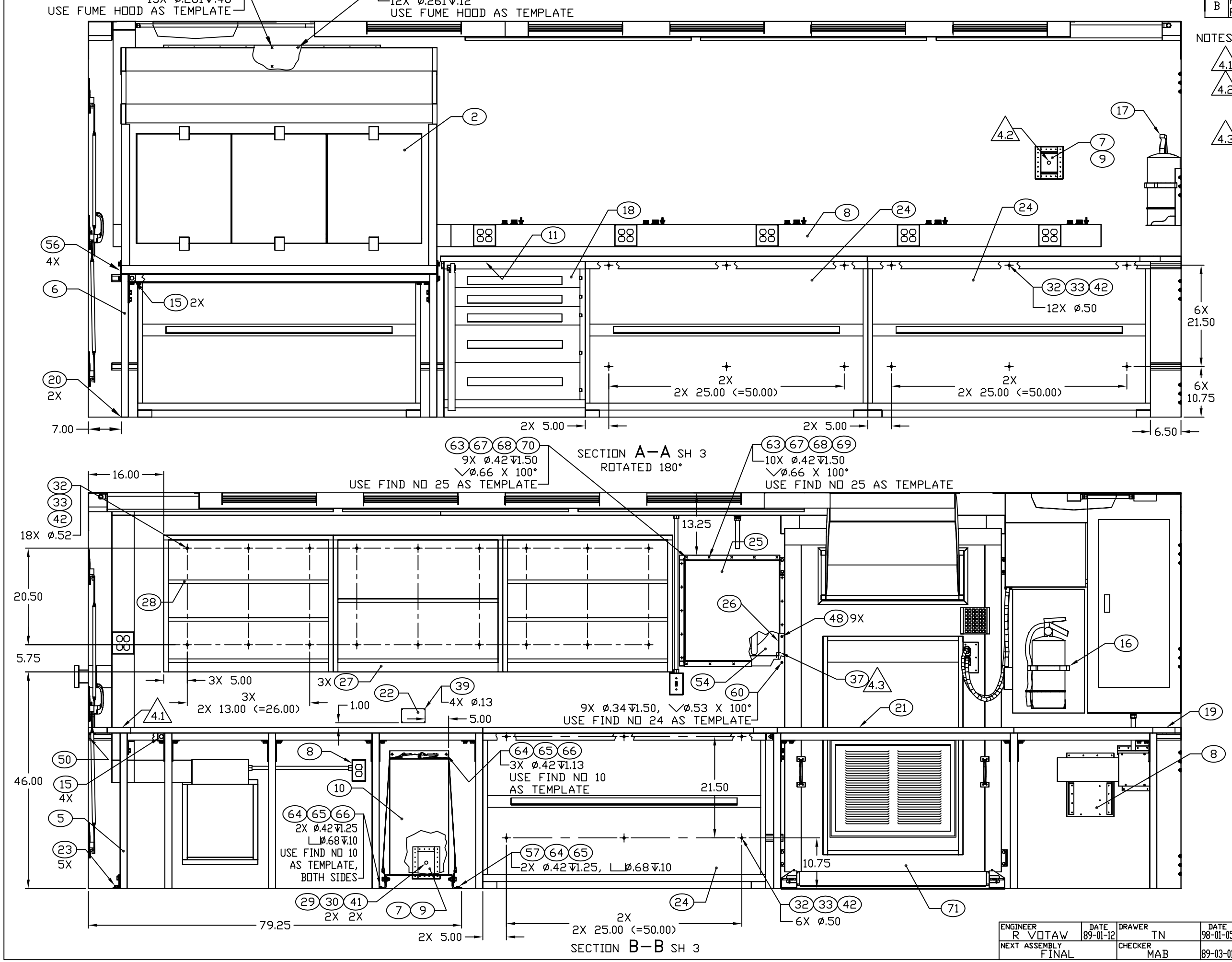

ENGINEER	DATE	DRAWER	DATE	SIZE	CAGE CODE	DRAWING NUMBER	REV
R VOTAW	89-01-12	TN	98-01-05	D	91145	MFCL100101	B
NEXT ASSEMBLY		CHECKER		SCALE		SHEET	
FINAL		MAB	89-03-01	1/10		4	