REVISION HISTORY			
REV	DESCRIPTION	DATE	APPROVAL
A	REVISED AND REDRAWN BY M. BEUSTER.	2006-05-11	R A VOTAW

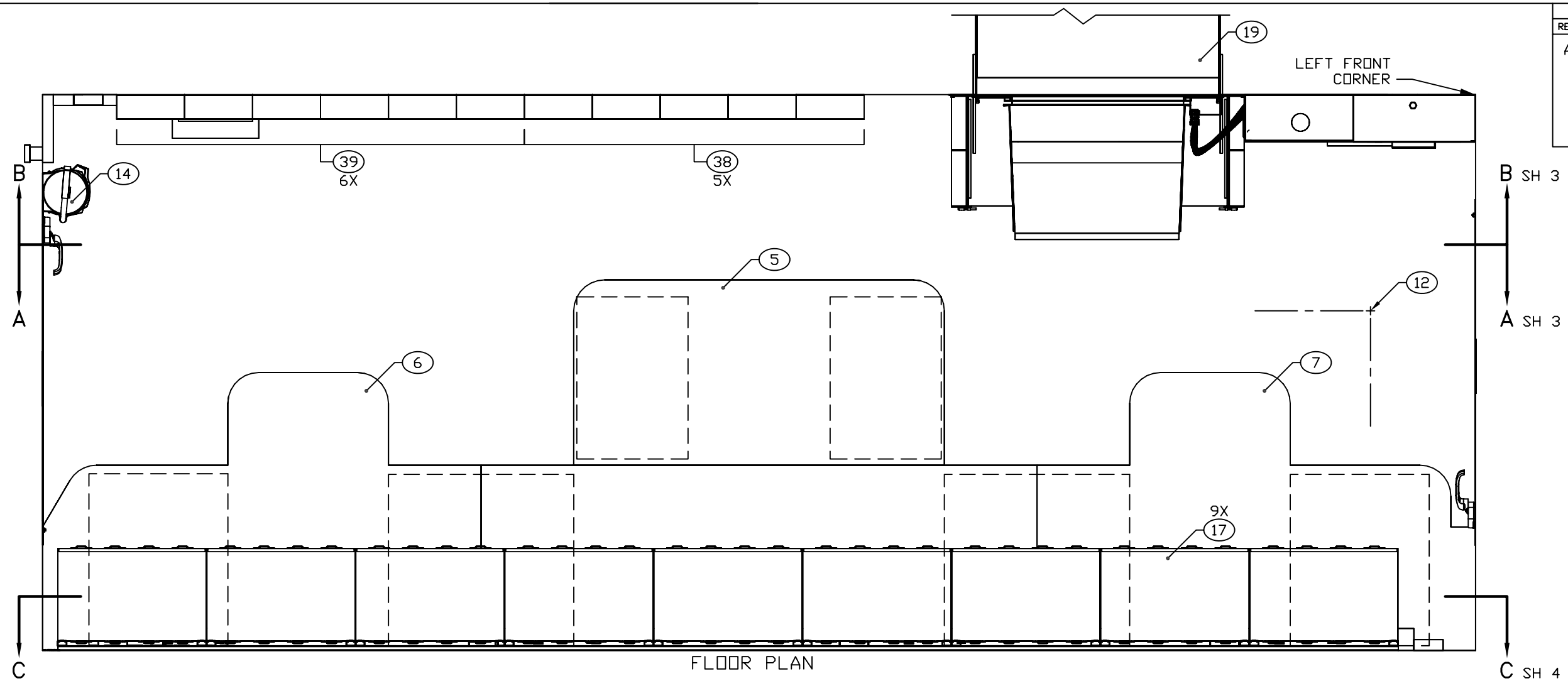

FLOOR PLAN

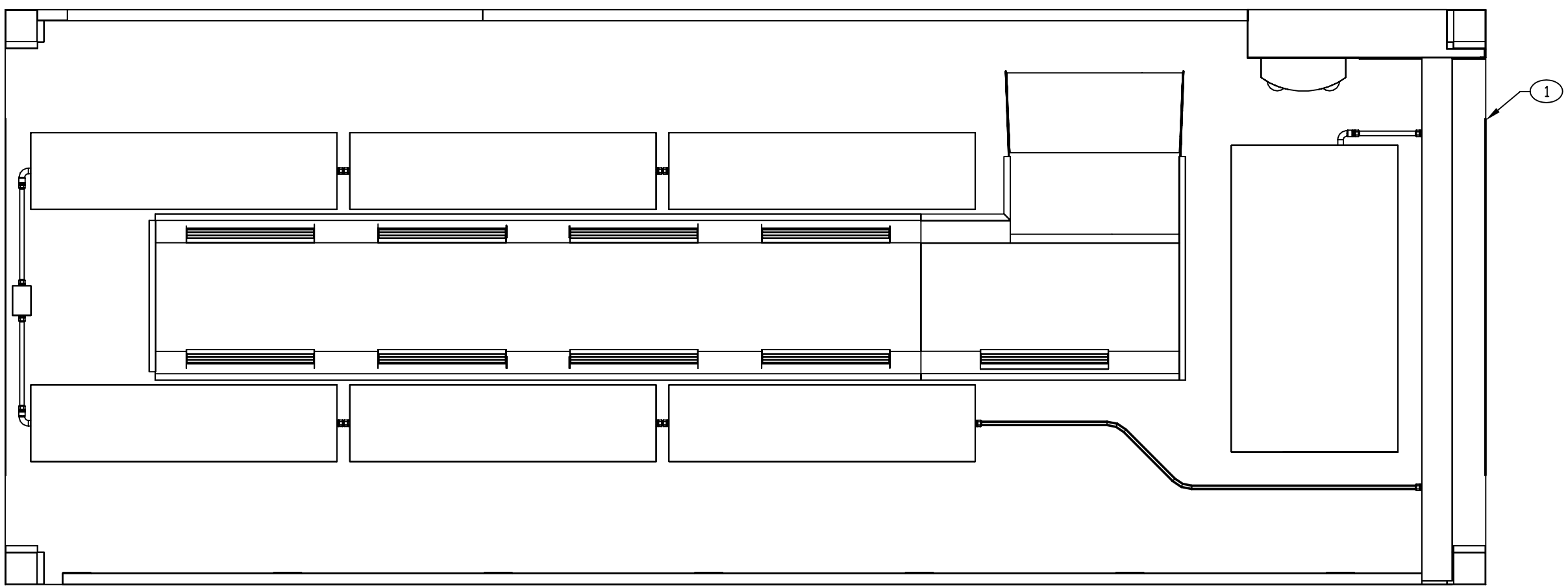

CEILING PLAN

ENGINEER	DATE	DRAWER	DATE	SIZE	CAGE CODE	DRAWING NUMBER	REV
M BEUSTER	83-12-09	MAB	88-12-02	D	91145	MFCL090101	A
NEXT ASSEMBLY		CHECKER		SCALE		SHEET	
FINAL		RGJ	88-12-20	1/10		2	

REVISION HISTORY			
REV	DESCRIPTION	DATE	APPROVAL
A	REVISED AND REDRAWN BY M. BEUSTER. (1) DIMENSION CHANGED.	2006-05-11	R A VOTAW

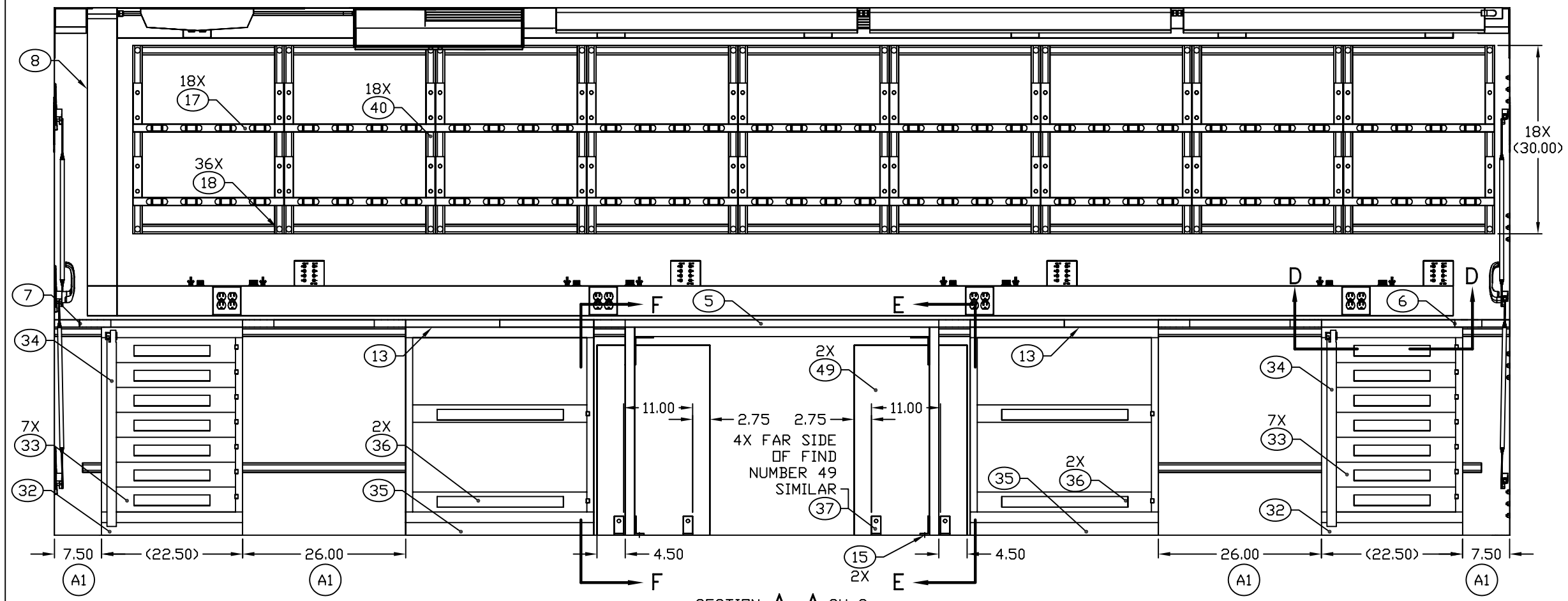

SECTION A–A SH 2
ROTATED 180°

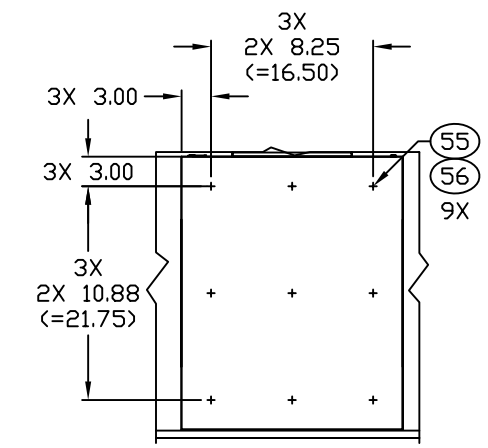

2X SECTION D–D

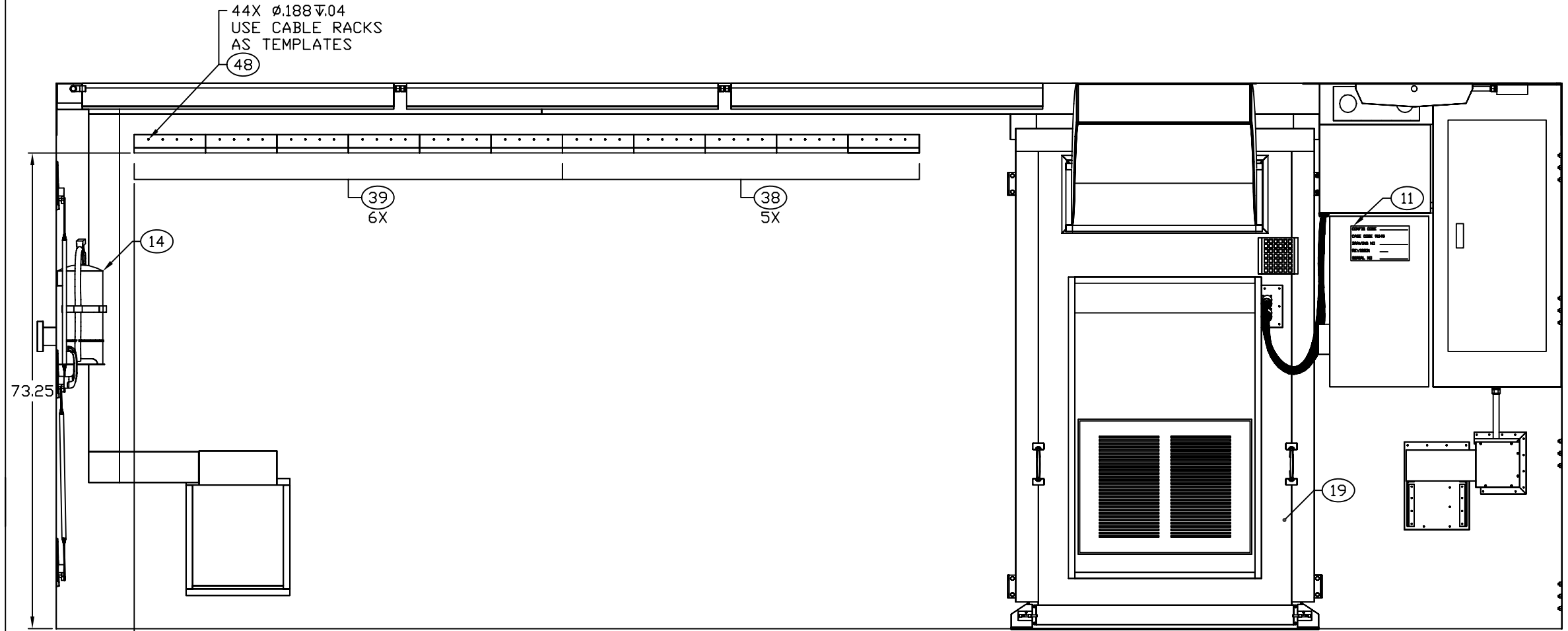

SECTION B–B SH 2

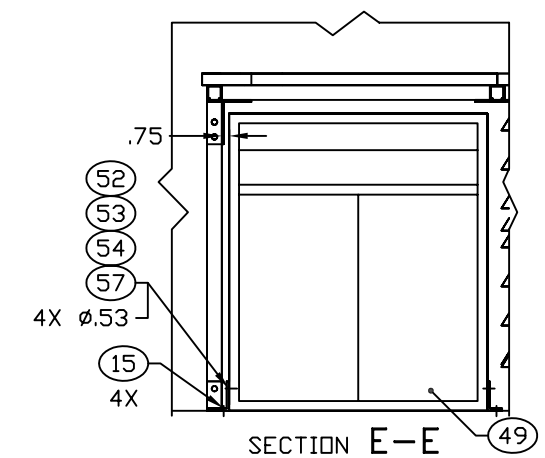

SECTION E–E

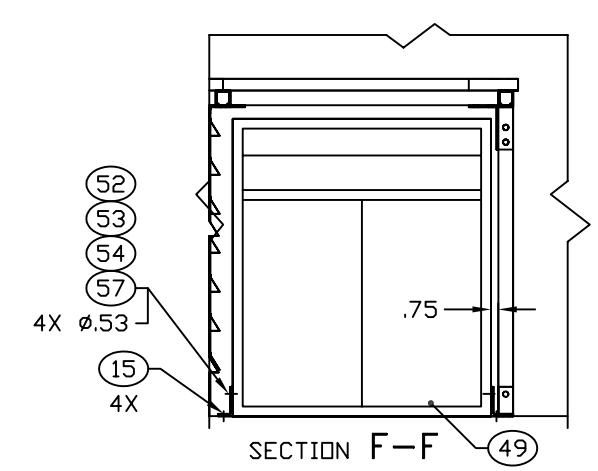

SECTION F–F

ENGINEER	DATE	DRAWER	DATE	SIZE	CAGE CODE	DRAWING NUMBER	REV
M BEUSTER	83-12-09	MAB	88-12-02	D	91145	MFCL090101	A
NEXT ASSEMBLY		CHECKER		SCALE		SHEET	
FINAL		RGJ	88-12-20	1/10		3	