REVISION HISTORY			
REV	DESCRIPTION	DATE	APPROVAL
A	REDRAWN WITH CHANGES.	02-03-29	R VOTAW
B	(6) VIEW INDICATOR DELETED.	02-05-30	R VOTAW

NOTES:

3.1 SEAL AROUND FLANGE EDGES AND ALL CONTACTING SURFACE WITH FIND NO 31. DO NOT USE INSIDE DUCTING.

3.2 USE FIND NO 74 WHEN MOBILE FACILITY JOIST IS ENCOUNTERED.

3.3 INSTALL ANGLE RING, FIND NO 107, IN PLACE OF EXISTING TUBEAXIAL FAN. REUSE EXISTING HARDWARE FOF RING INSTALLATION.

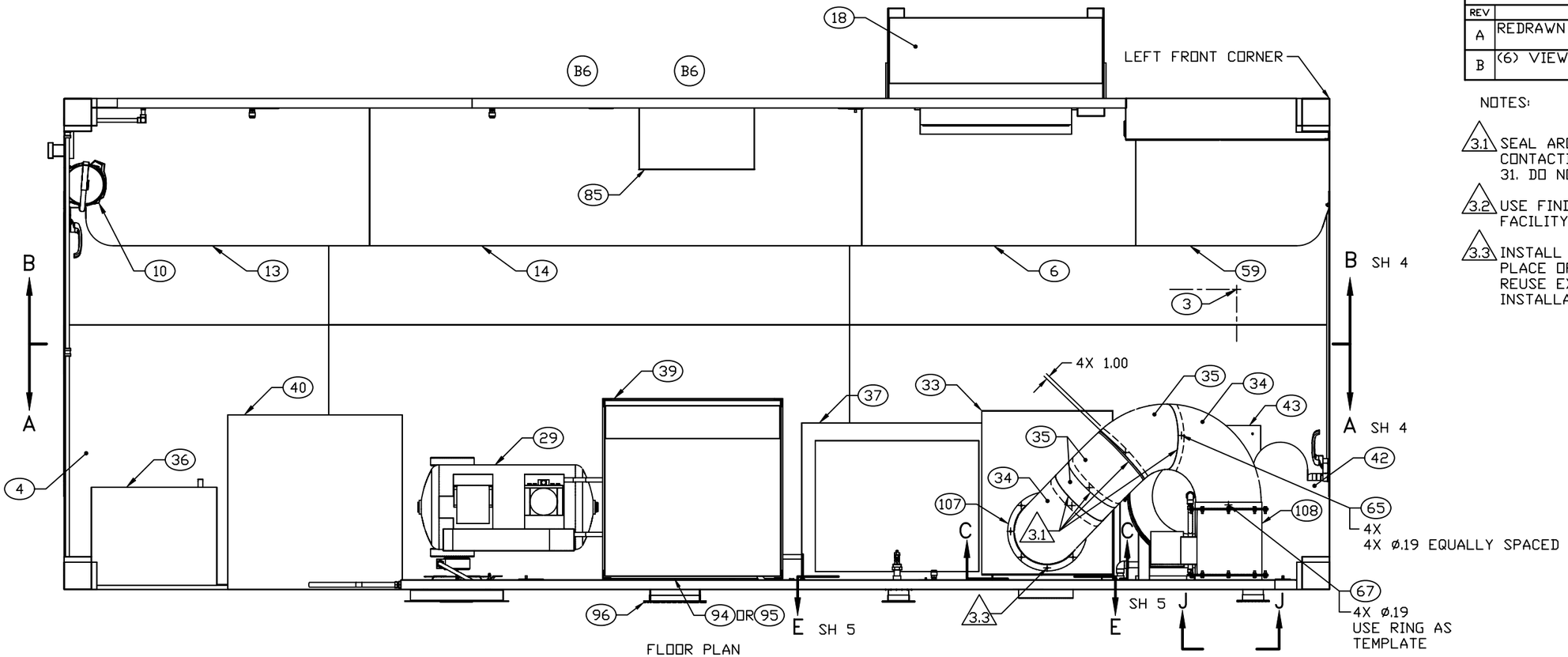

FLOOR PLAN

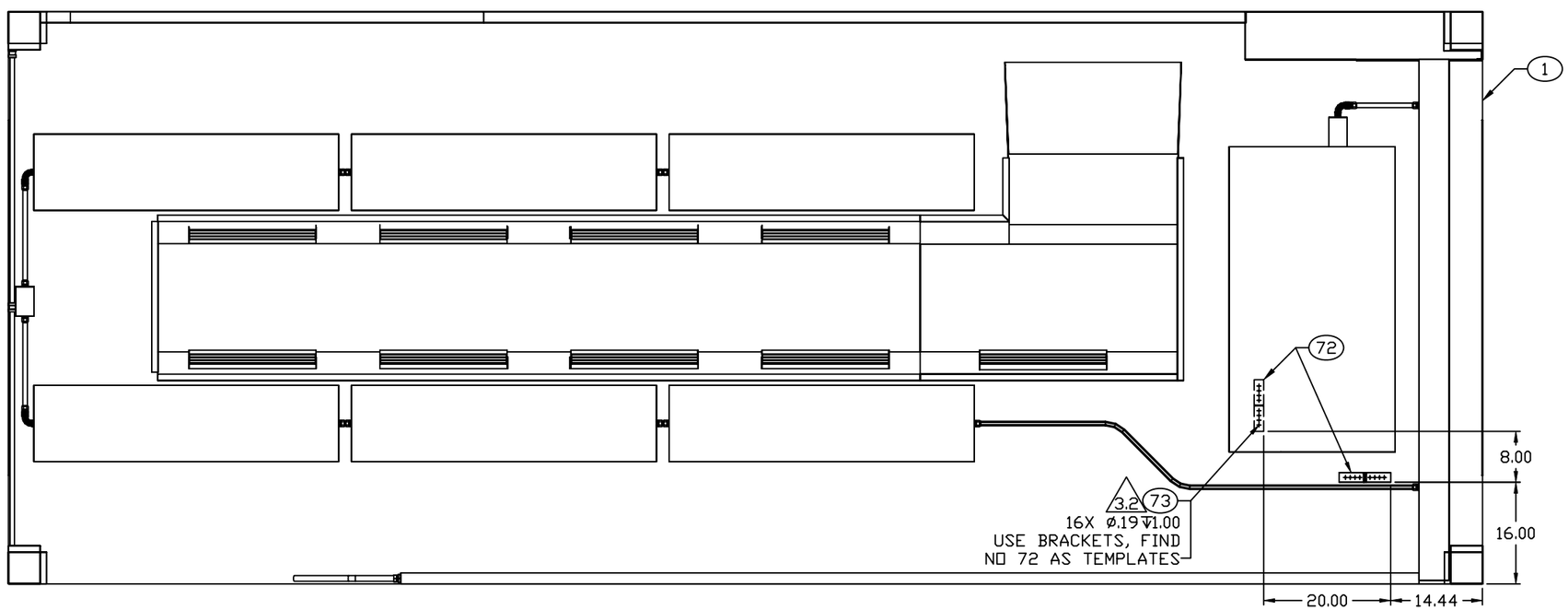

CEILING PLAN

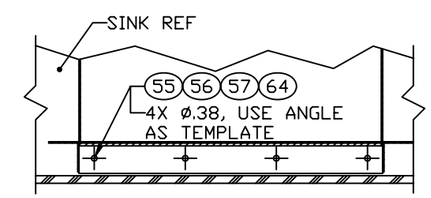

SECTION D–D
SCALE 1/5

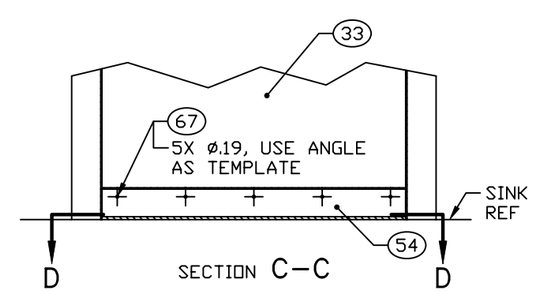

SECTION C–C
SCALE 1/5

ENGINEER	DATE	DRAWER	DATE	SIZE	CAGE CODE	DRAWING NUMBER	REV
R VOTAW	90-06-15	TN	02-05-30	D	91145	MFCL030101	B
NEXT ASSEMBLY		CHECKER		SCALE		SHEET	
FINAL		RGJ	88-08-29	1/11		3	

REVISION HISTORY			
REV	DESCRIPTION	DATE	APPROVAL
A	REDRAWN WITH CHANGES.	02-03-29	R VOTAW
B	(1) NOTE ADDED. (4) ITEM ADDED.	02-05-30	R VOTAW

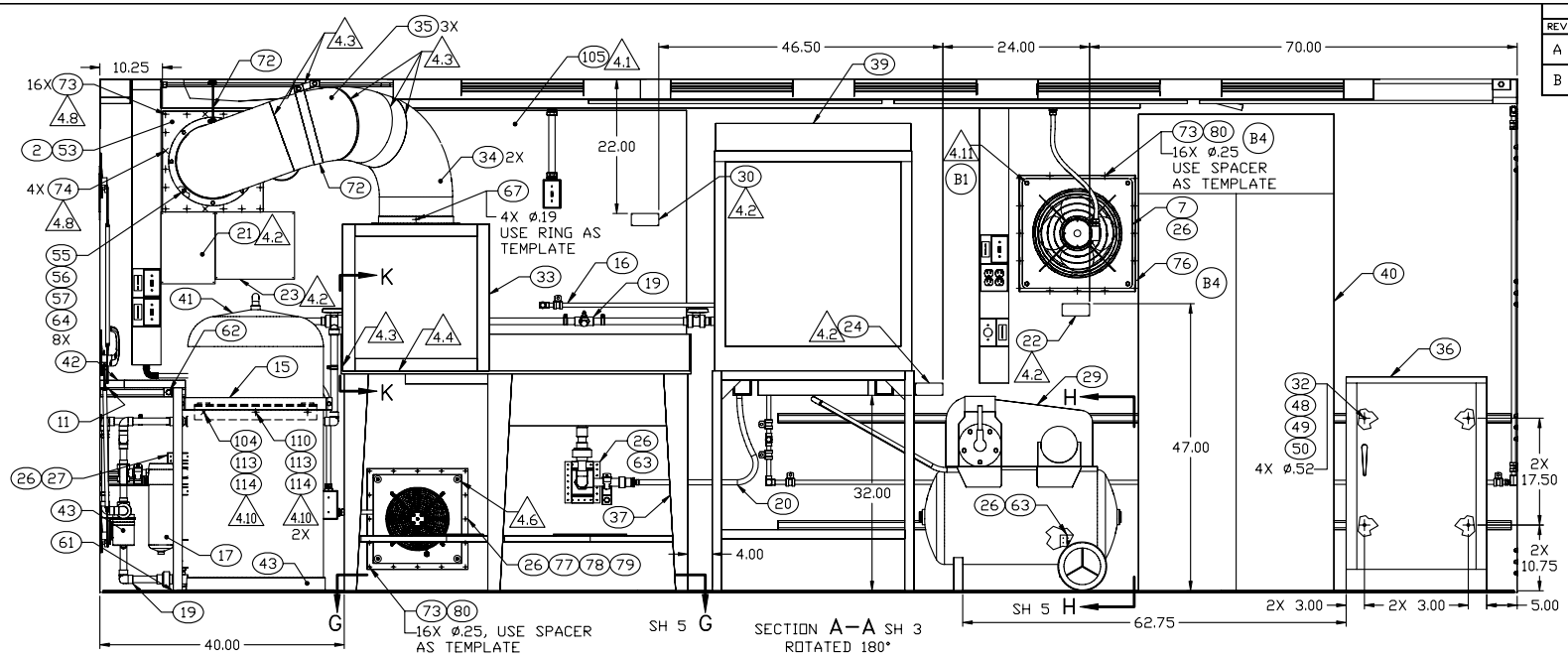

SECTION A–A SH 3
ROTATED 180°

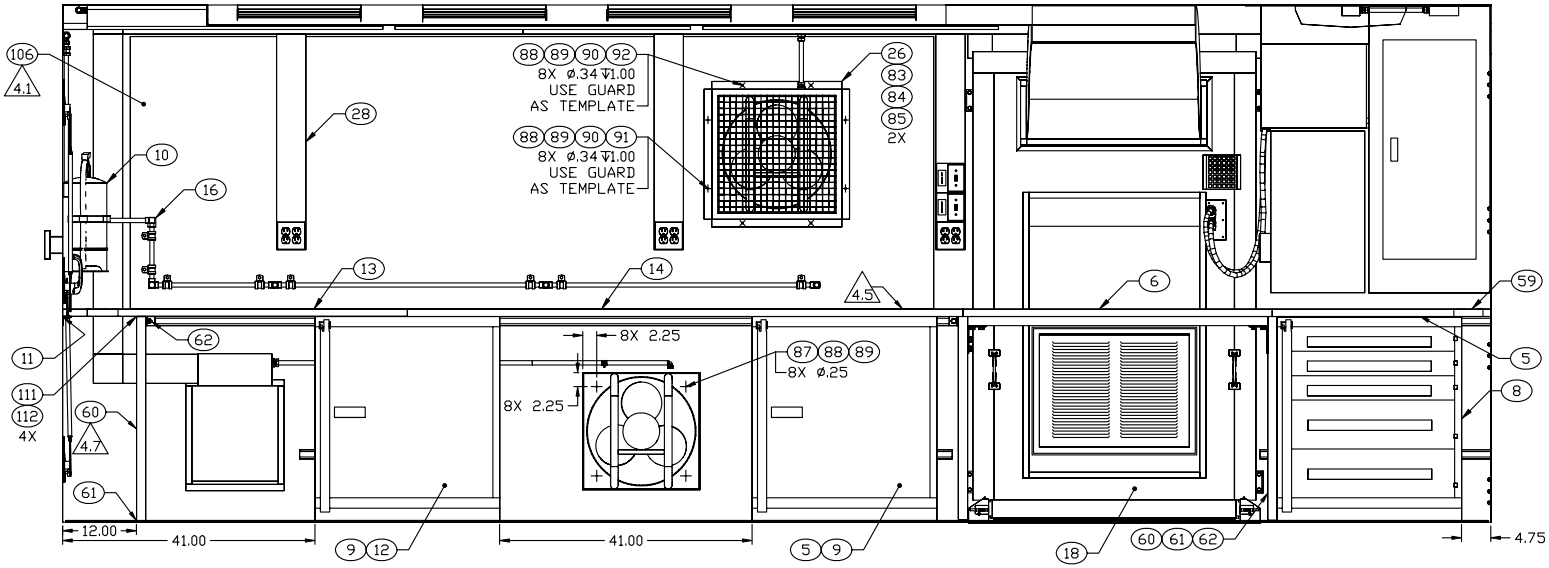

SECTION B–B SH 3
ONE FAN GUARD NOT SHOWN

NOTES:

4.1 INSTALL FIND NUMBERS 105 AND 106 BEFORE MAKING CUTOUTS AND BEFORE INSTALLING ELECTRICAL ITEMS. SEE SHEET 6.

4.2 INSTALL 4X USING FIND NO 46. ø.12 ⊽1.50.

4.3 CUT TO FIT AT TIME OF INSTALLATION.

4.4 CUT BOOTH FLANGES TO LEVEL BOOTH AT TIME OF INSTALLATION.

4.5 SEAL ALONG TOP OF COUNTERTOP AT SPLASH GUARD WITH FIND NO 31.

4.6 DRILL 4 HOLES USING EXHAUST FAN AS TEMPLATE. USE FAN FASTENERS TO ATTACH FAN TO SPACER.

4.7 REPLACE FIND NO 7 OF DRAWING NO MFBFNI133-3 CAGE 91145 WITH FIND NO 109. REUSE FASTENERS.

4.8 ø.19 ⊽1.00. USE ADAPTER PLATE, FIND NO 53, AS TEMPLATE.

4.9 MEASURE VERTICAL DIMENSIONS FROM TOP OF FLOOR PLATES, FIND NO 4.

4.10 ø.42 ⊽1.00, USE TANK BRACE ASSY, FIND NO 15, AS TEMPLATE.

4.11 4X ø.26 THRU SPACER, USE FAN AS TEMPLATE. INSTALL FAN TO SPACER USING EXISTING HARDWARE.

B1

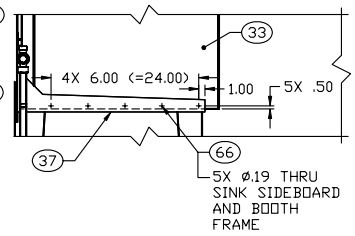

SECTION K–K

ENGINEER	DATE	DRAWER	DATE	SIZE	CAGE CODE	DRAWING NUMBER	REV
R VOTAW	90-06-15	TN	02-05-29	D	91145	MFCL030101	B
NEXT ASSEMBLY		CHECKER		SCALE		SHEET	
FINAL		RGJ	88-08-29	1/10		4	