REVISION HISTORY			
REV	DESCRIPTION	DATE	APPROVAL
C	REVISED AND PARTIALLY REDRAWN BY T H NGUYEN. (1) ITEM ADDED. (2) VIEW ADDED.	05-04-05	R VOTAW

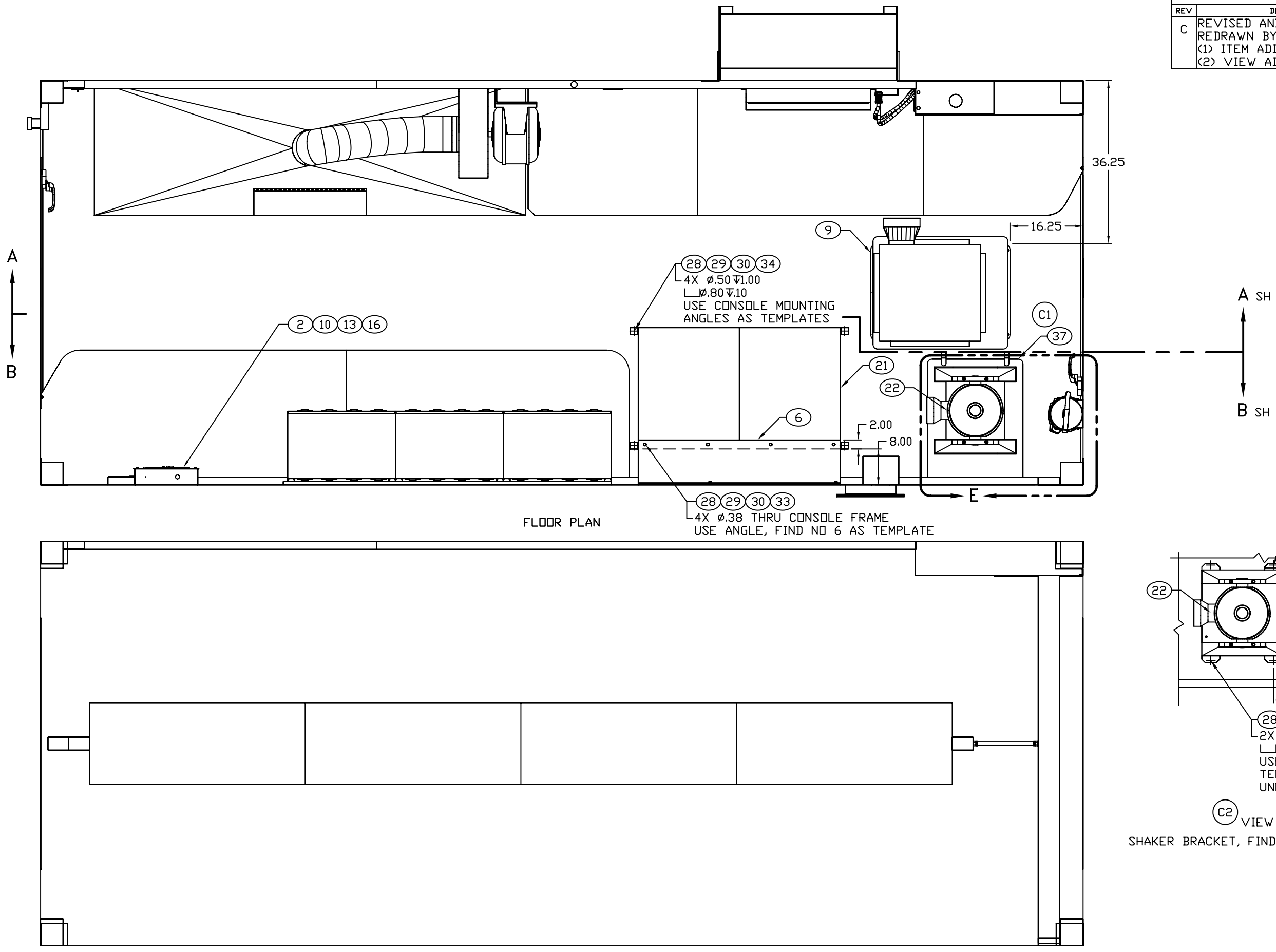

FLOOR PLAN

CEILING PLAN

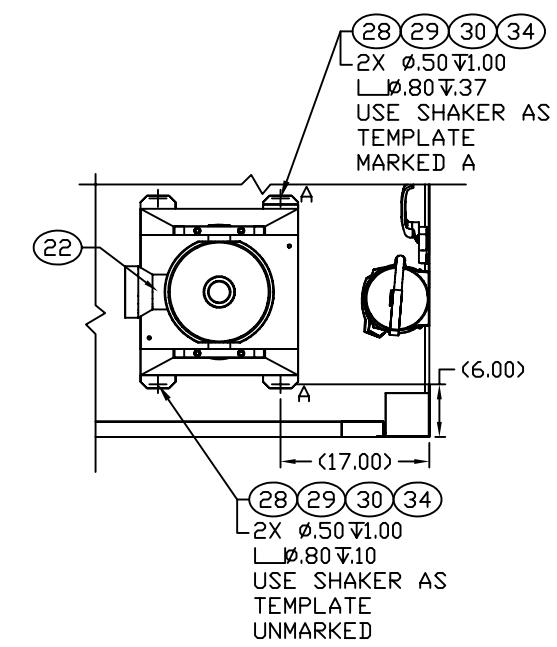

C2 VIEW E

SHAKER BRACKET, FIND NO 37, NOT SHOWN

AFTER MODIFICATION

ENGINEER	DATE	DRAWER	DATE	SIZE	CAGE CODE	DRAWING NUMBER	REV
T NGUYEN	04-03-09	TN	04-03-09	D	91145	MFCA090162	C
NEXT ASSEMBLY		CHECKER		SCALE 1/11		SHEET 5	
FINAL		MAB	04-03-09				

REVISION HISTORY			
REV	DESCRIPTION	DATE	APPROVAL
C	REVISED AND PARTIALLY REDRAWN BY T H NGUYEN. (1) ITEM ADDED. (3) NOTE CHANGED.	05-04-05	R VOTAW

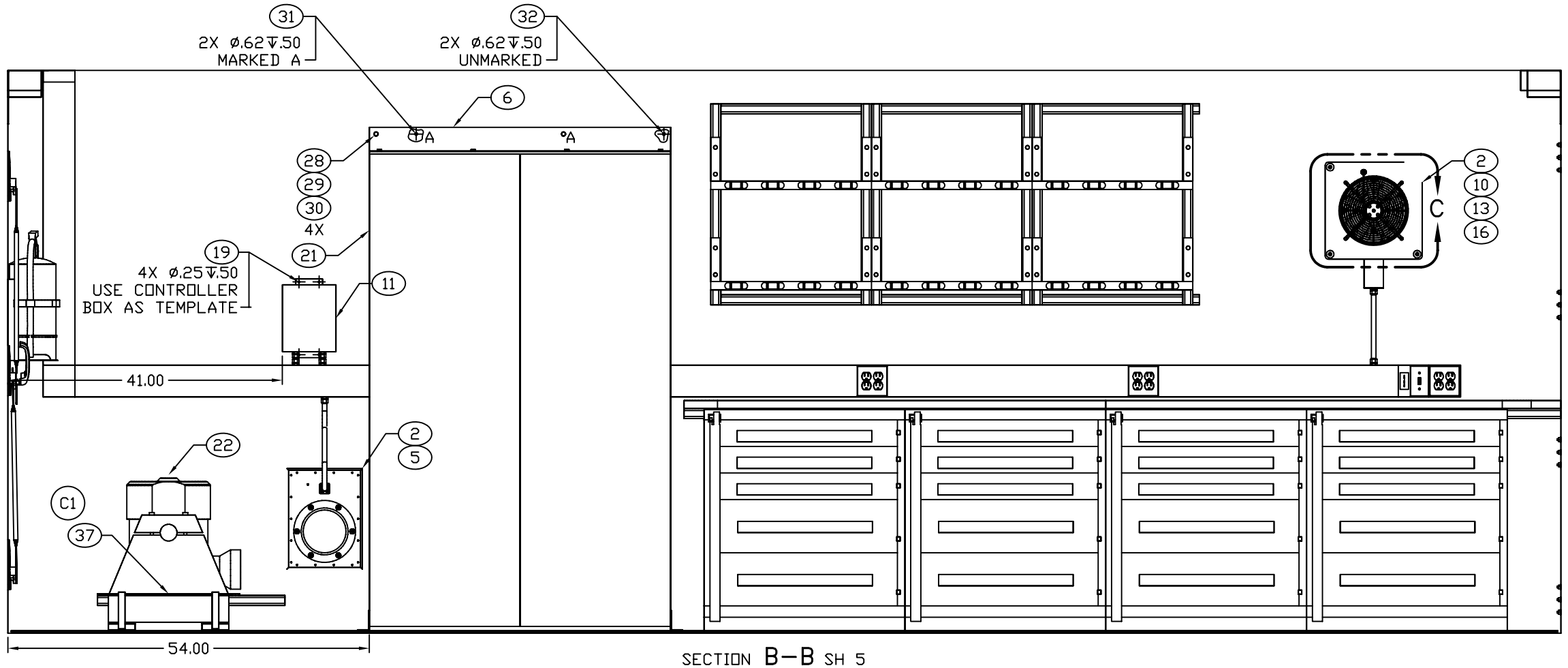

SECTION B–B SH 5
ROTATED 180°

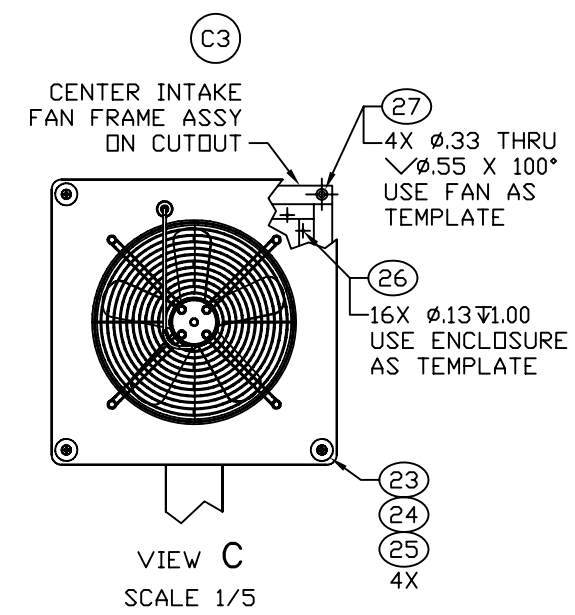

VIEW C
SCALE 1/5

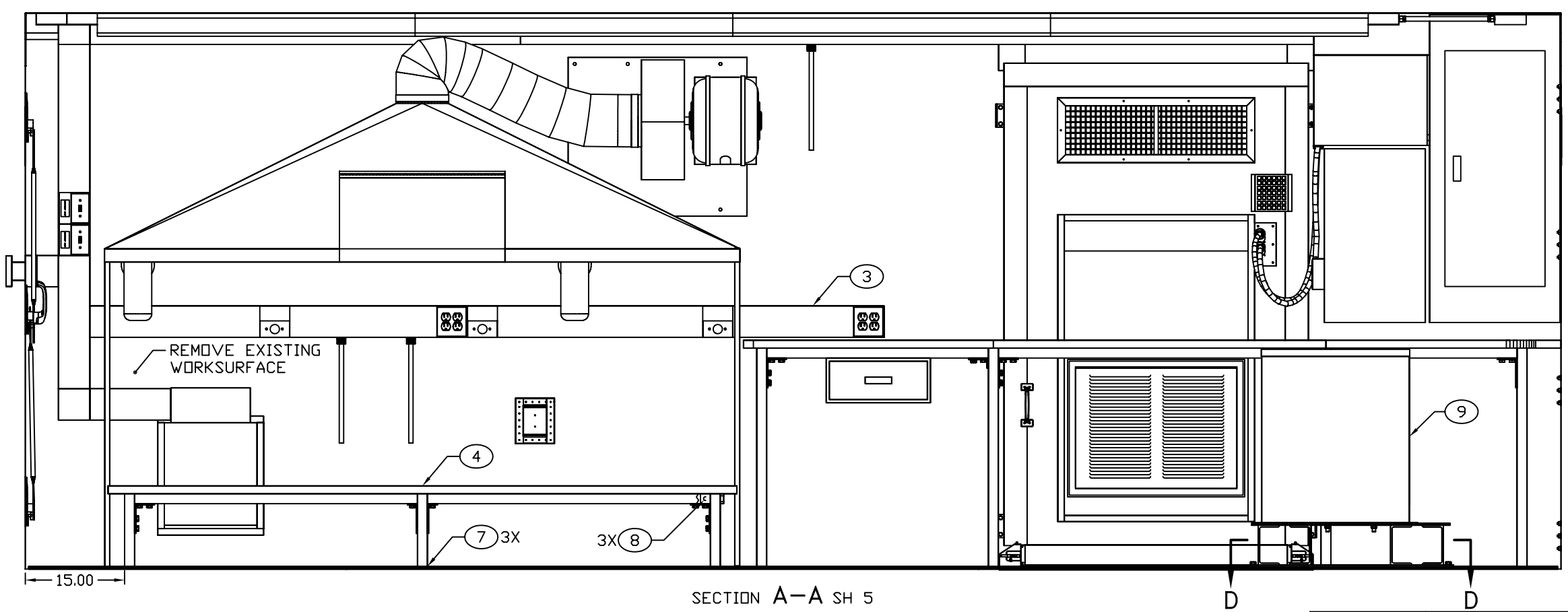

SECTION A–A SH 5

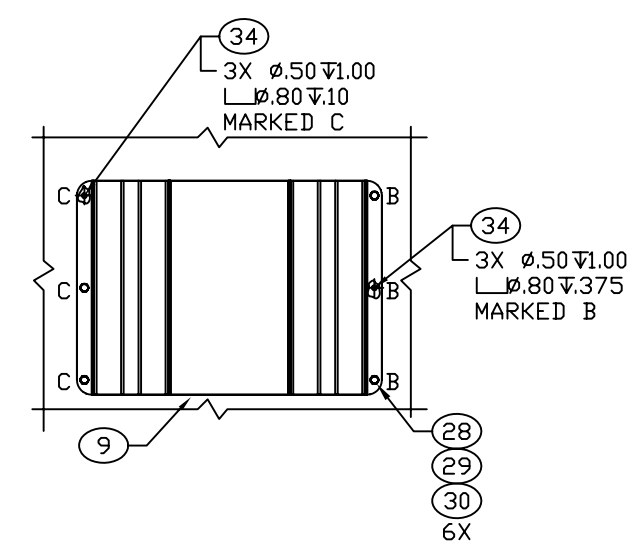

SECTION D–D

AFTER MODIFICATION

ENGINEER	DATE	DRAWER	DATE	SIZE	CAGE CODE	DRAWING NUMBER	REV
T NGUYEN	04-03-09	TN	04-03-09	D	91145	MFCA090162	C
NEXT ASSEMBLY		CHECKER		SCALE		SHEET	
FINAL		MAB	04-03-09	1/10		6	