REVISION HISTORY			
REV	DESCRIPTION	DATE	APPROVAL
C	REVISED AND PARTIALLY REDRAWN BY M BEUSTER. EMERGENCY LIGHT ADDED.	04-0126	R A VOTAW

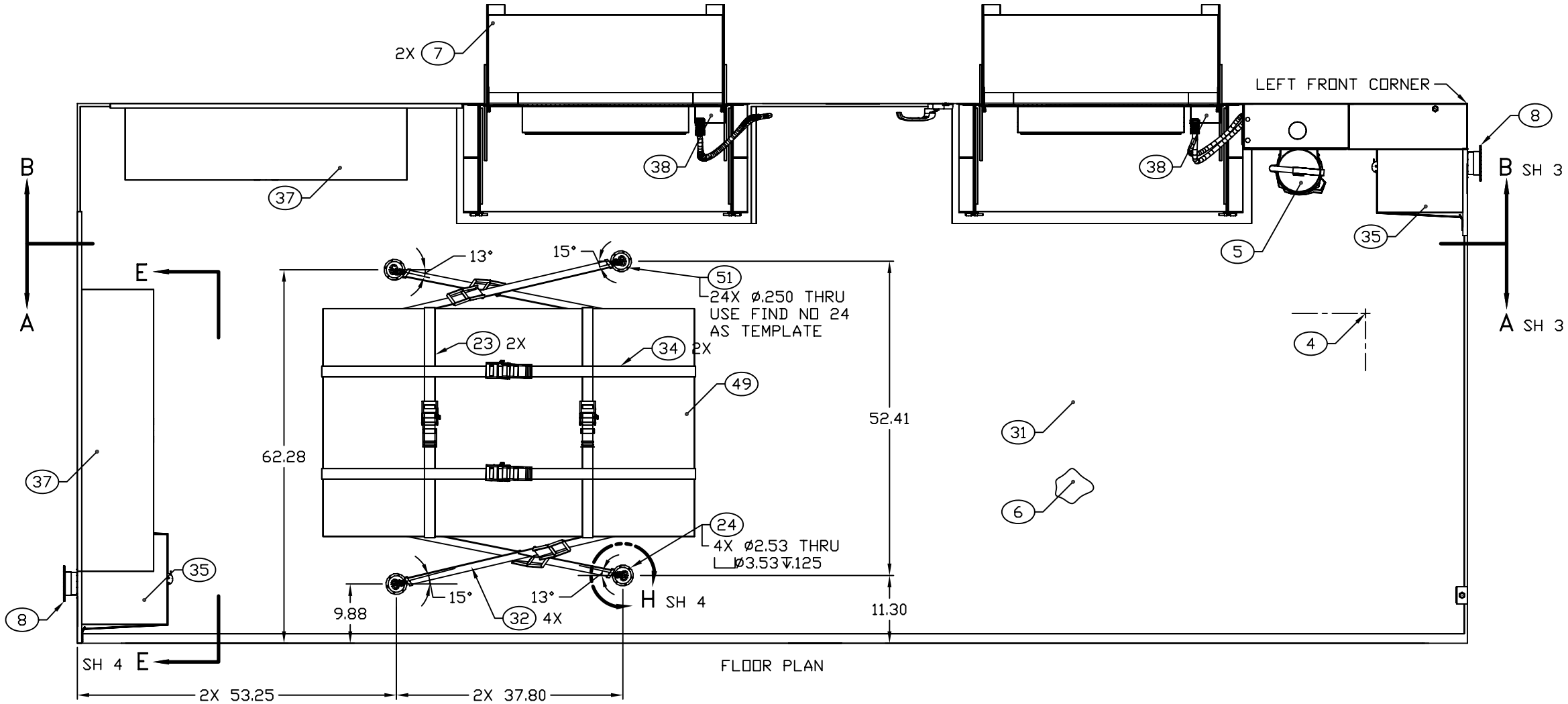

FLOOR PLAN

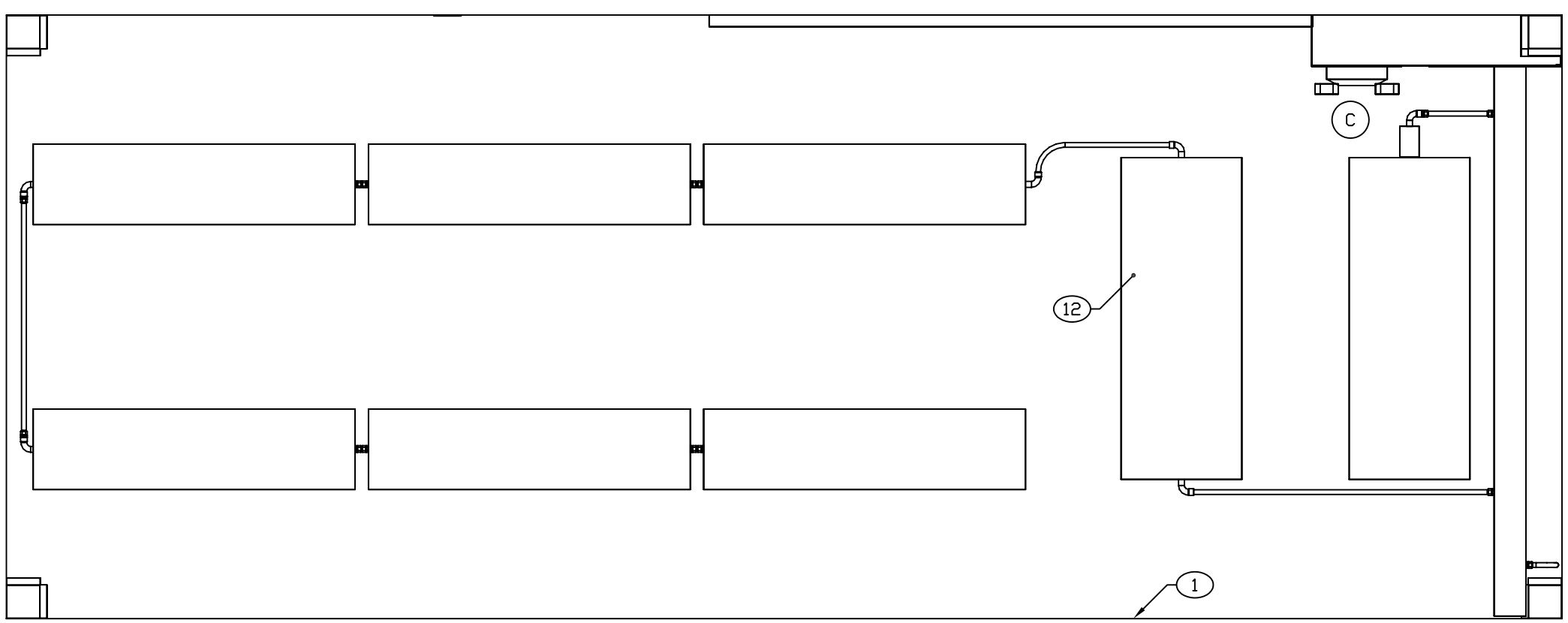

CEILING PLAN

ENGINEER	DATE	DRAWER	DATE	SIZE	CAGE CODE	DRAWING NUMBER	REV
SIDDENS	88-01	MAB	02-07-01	D	91145	MFCA080101	C
NEXT ASSEMBLY		CHECKER		SCALE 1/11		SHEET 2	
FINAL		MAB	88-03-14				

REVISION HISTORY			
REV	DESCRIPTION	DATE	APPROVAL
C	REVISED AND PARTIALLY REDRAWN BY M BEUSTER. EMERGENCY LIGHT ADDED.	04-0126	R A VOTAW

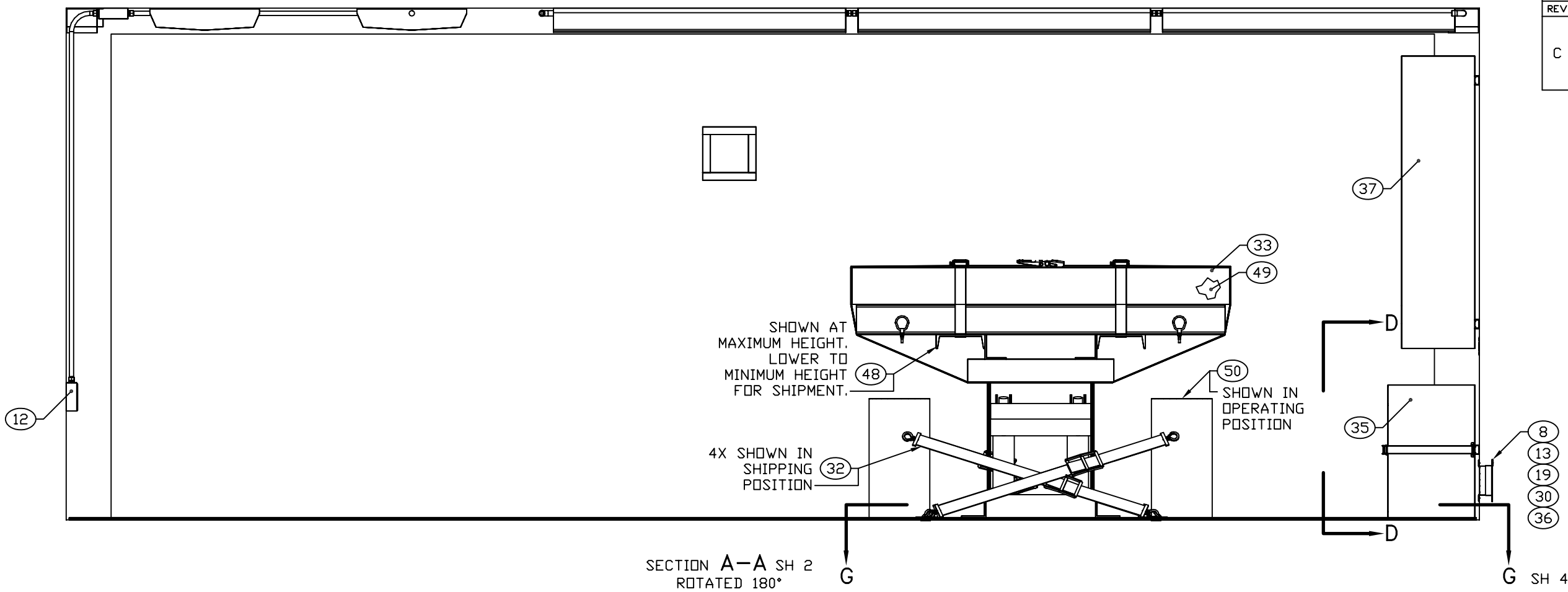

SECTION A–A SH 2
ROTATED 180°

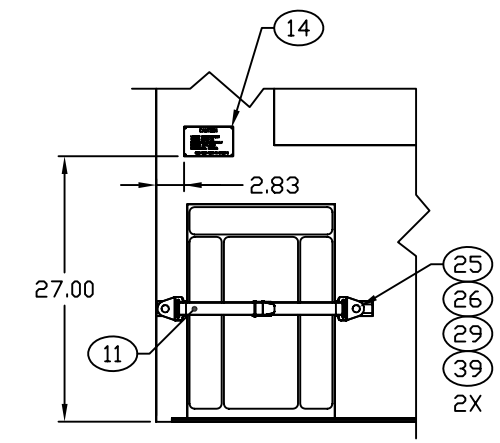

SECTION D–D

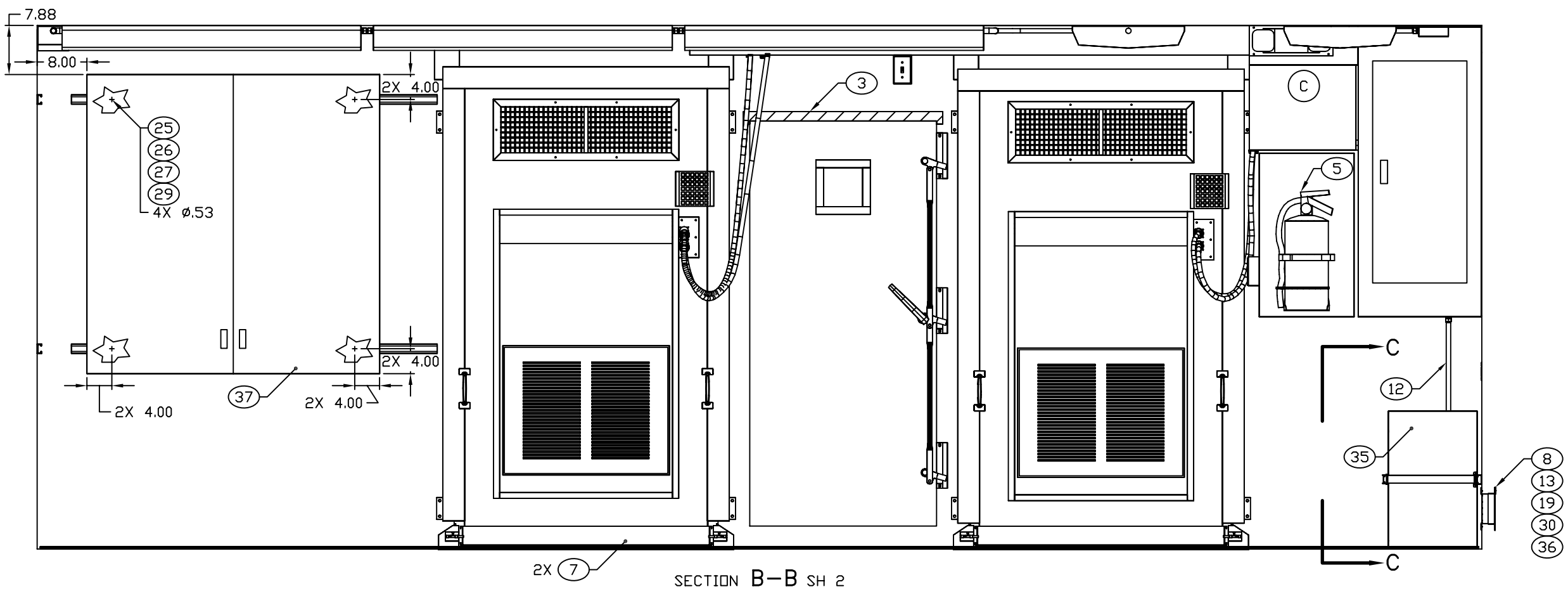

SECTION B–B SH 2

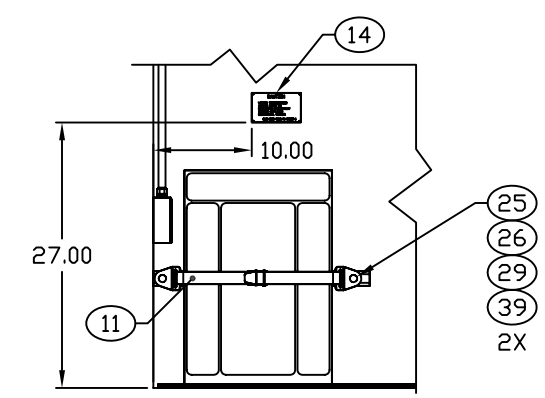

SECTION C–C

ENGINEER	DATE	DRAWER	DATE	SIZE	CAGE CODE	DRAWING NUMBER	REV
SIDDENS	88-01	MAB	02-07-01	D	91145	MFCA080101	C
NEXT ASSEMBLY		CHECKER		SCALE		SHEET	
FINAL		MAB	88-03-14	1/10		3	