REVISION HISTORY			
REV	DESCRIPTION	DATE	APPROVAL

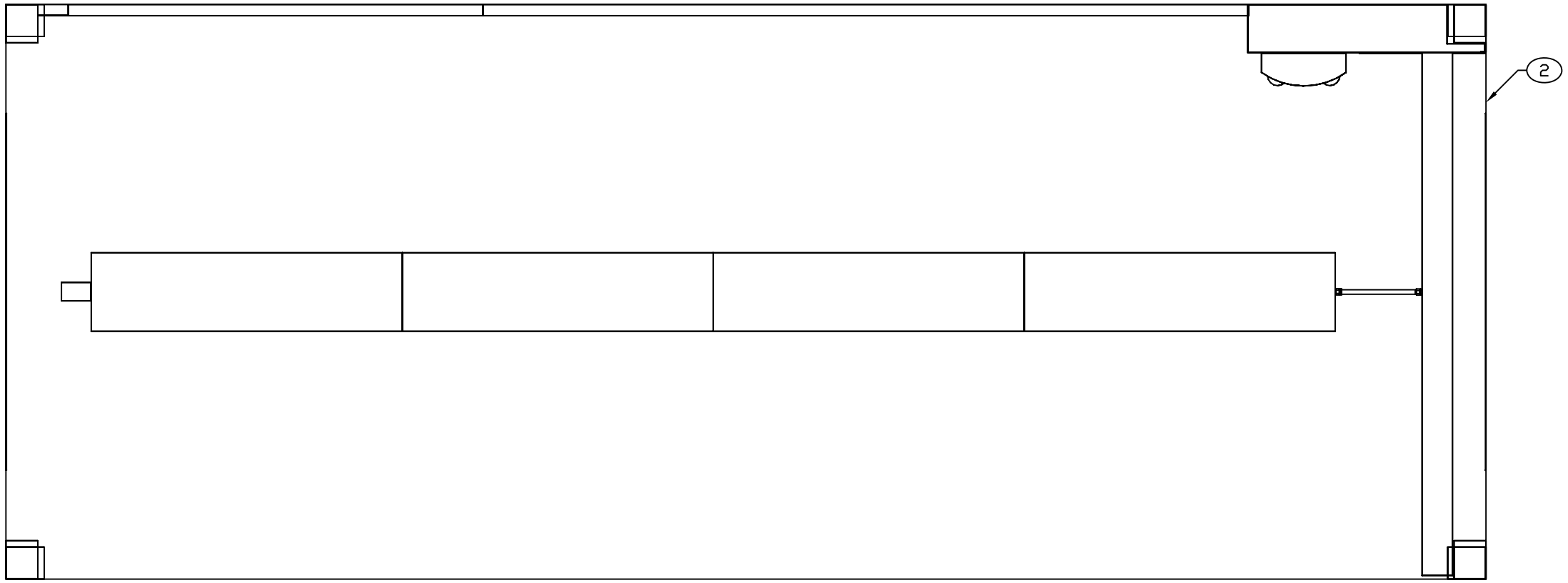

−3 CEILING PLAN

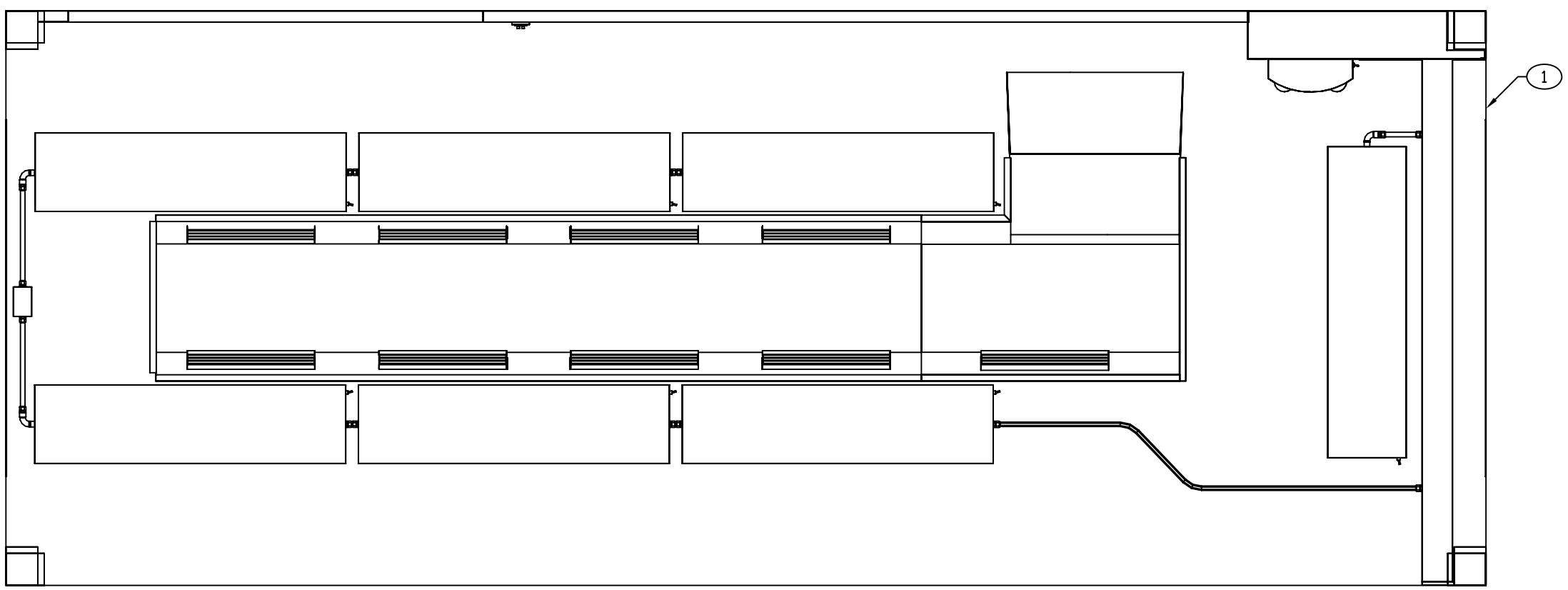

−1 CEILING PLAN

ENGINEER	DATE	DRAWER	DATE	SIZE	CAGE CODE	DRAWING NUMBER	REV
M BEUSTER	2007-09-13	MAB	2007-09-13	D	91145	MFAT120101	−
NEXT ASSEMBLY		CHECKER		SCALE		SHEET	
FINAL		TN	2007-09-13	1/11		3	

REVISION HISTORY			
REV	DESCRIPTION	DATE	APPROVAL

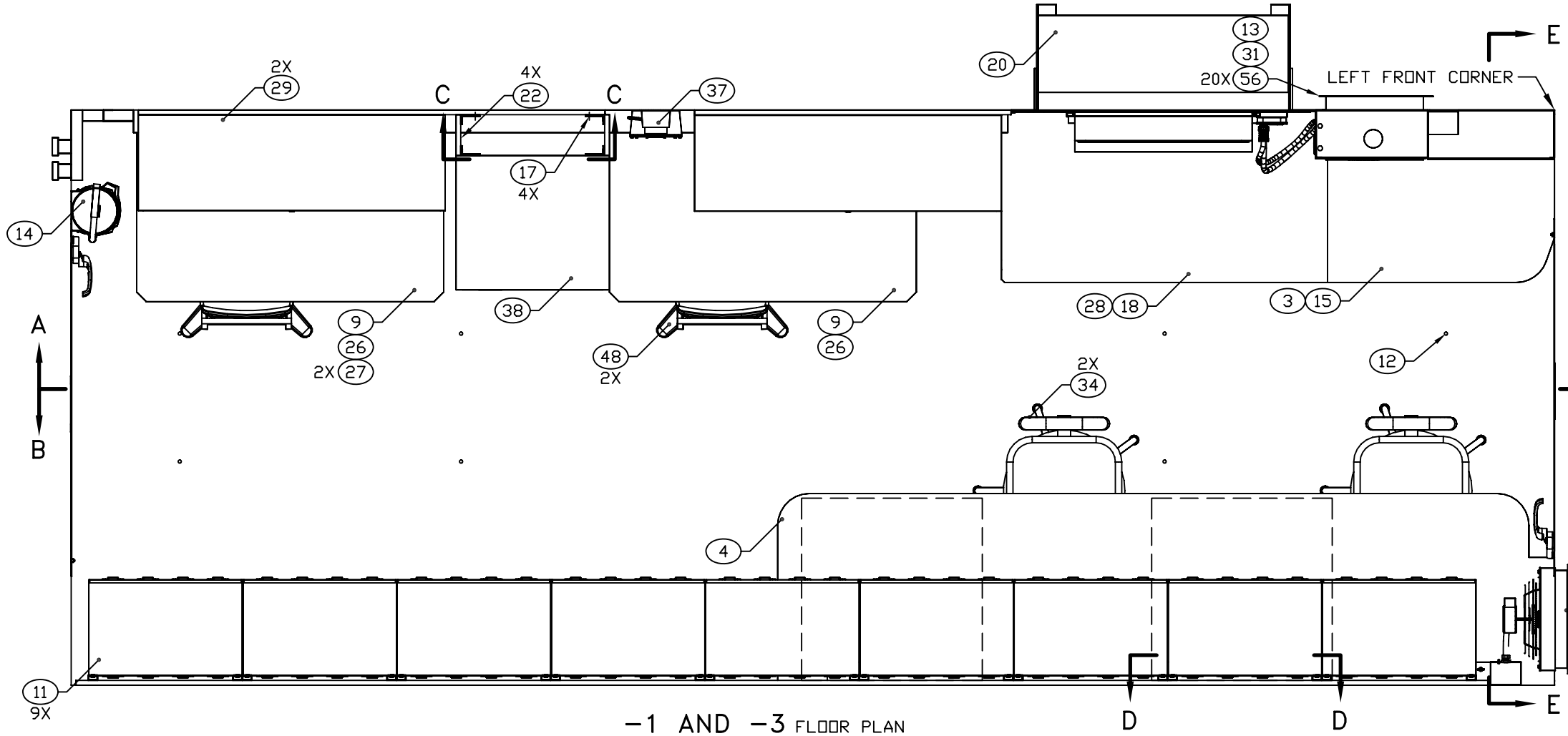

−1 AND −3 FLOOR PLAN

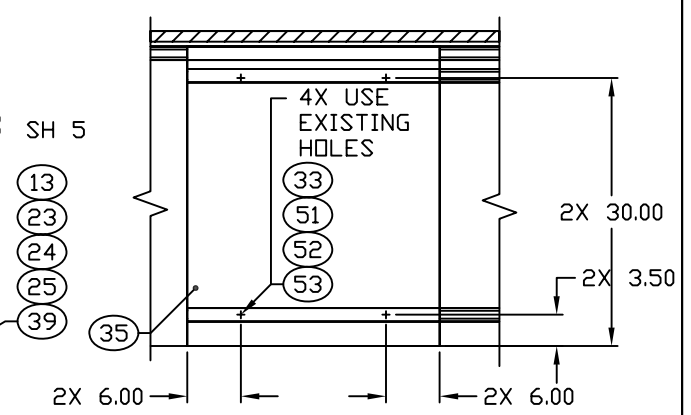

2X SECTION D−D
ROTATED 180°
CABINET INSTALLATION

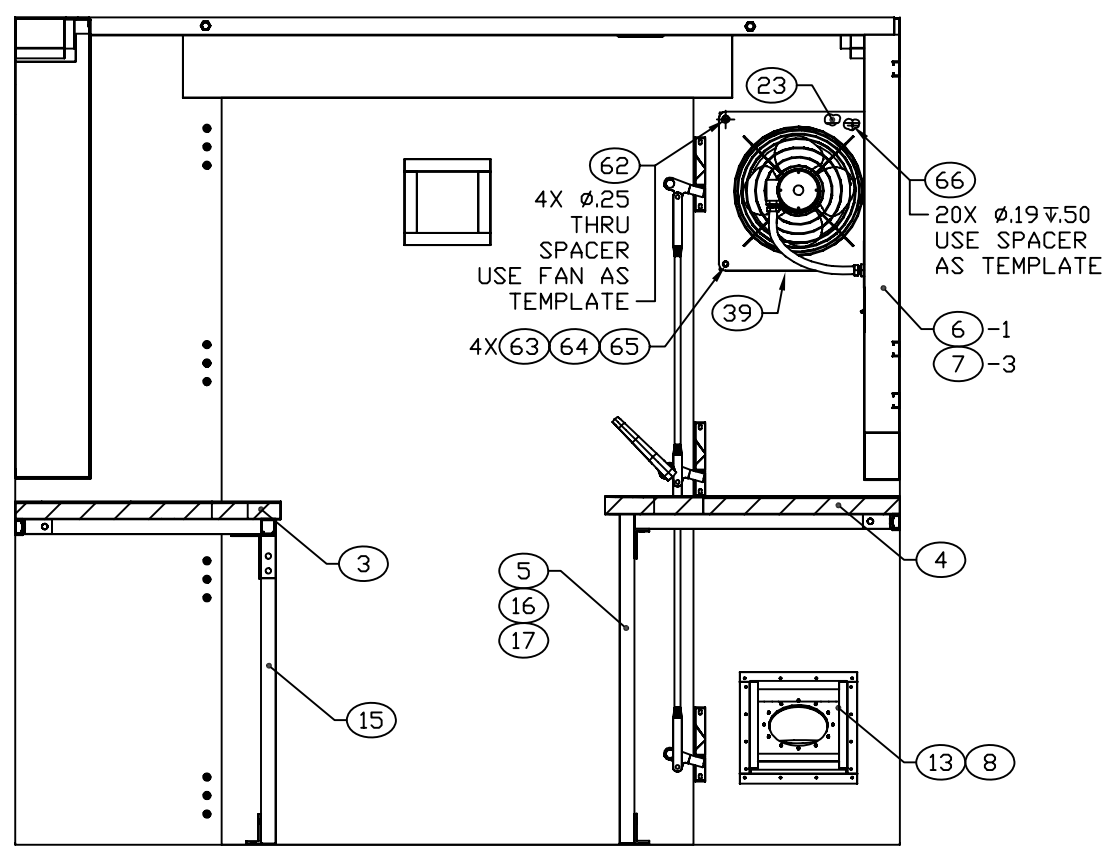

SECTION E−E
ROTATED 90° CCW
SCALE 1/10

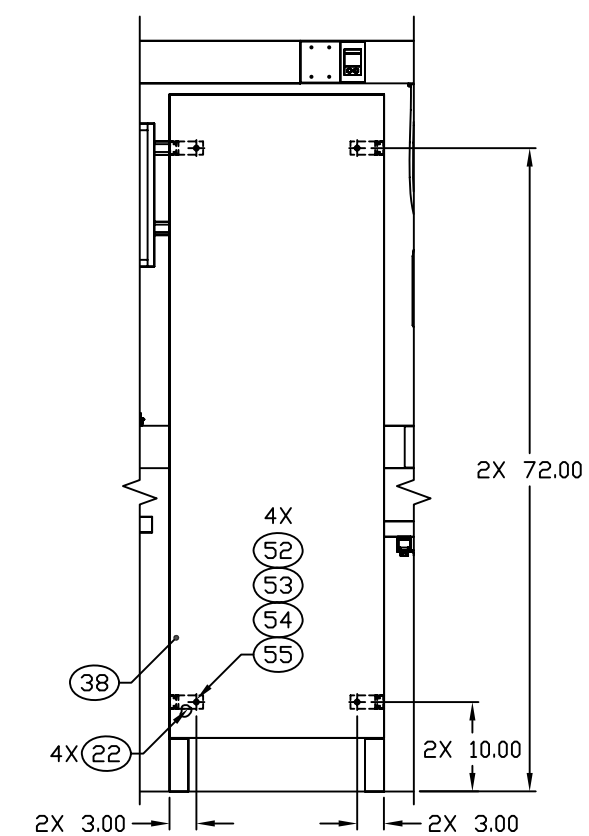

SECTION C−C
LOCKER INSTALLATION

ENGINEER	DATE	DRAWER	DATE	SIZE	CAGE CODE	DRAWING NUMBER	REV
M BEUSTER	2007-09-13	MAB	2007-09-13	D	91145	MFAT120101	−
NEXT ASSEMBLY		CHECKER		SCALE		SHEET	
FINAL		TN	2007-09-13	1/11		4	

REVISION HISTORY			
REV	DESCRIPTION	DATE	APPROVAL

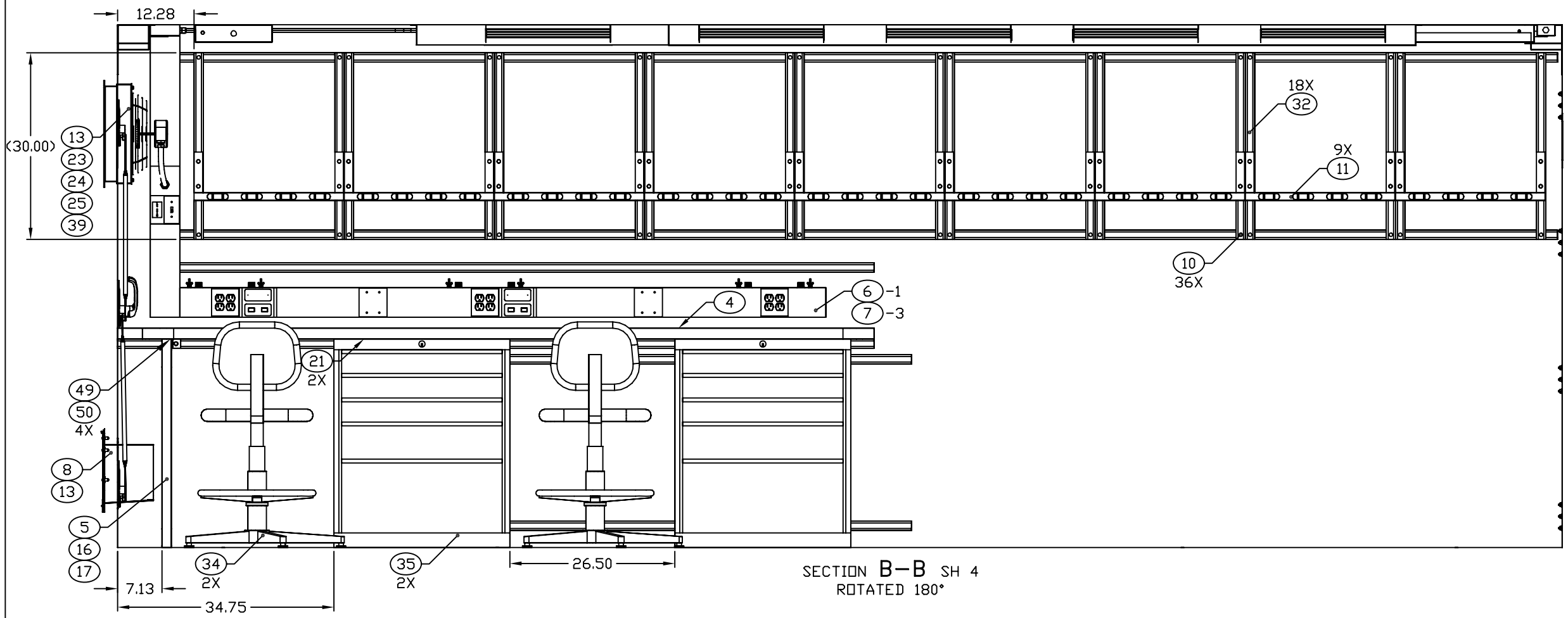

SECTION B–B SH 4
ROTATED 180°

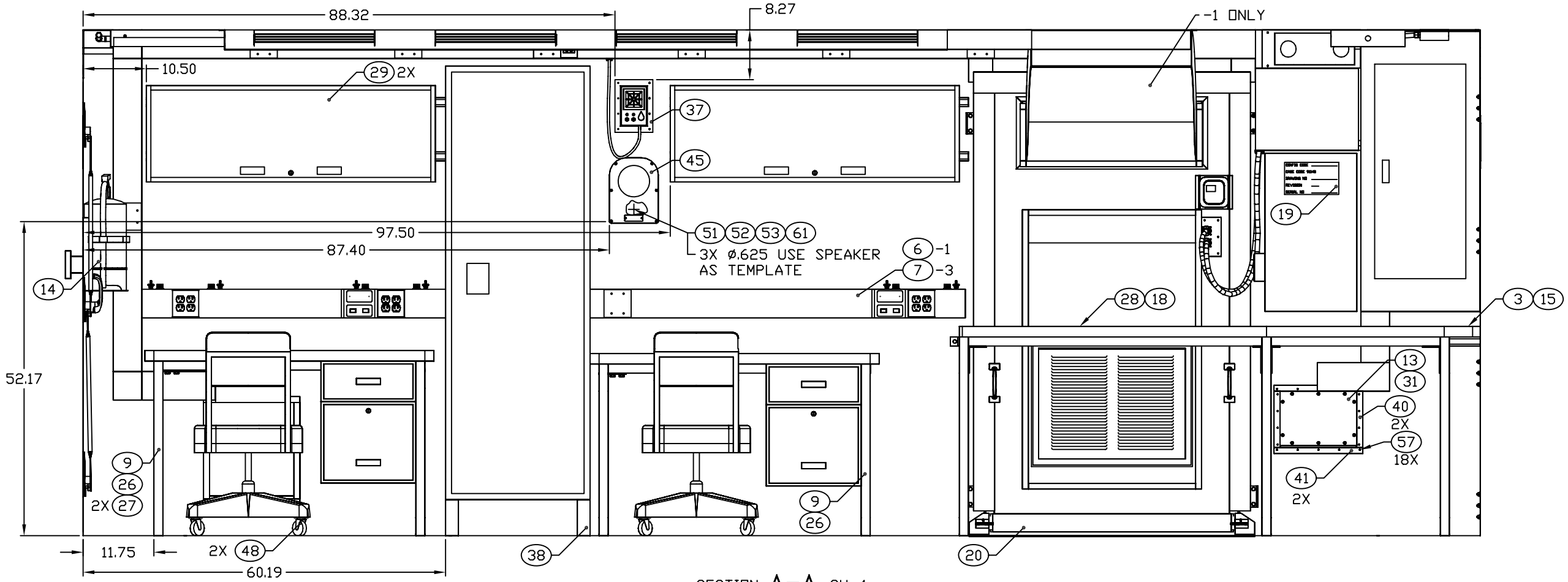

SECTION A–A SH 4

ENGINEER	DATE	DRAWER	DATE	SIZE	CAGE CODE	DRAWING NUMBER	REV
M BEUSTER	2007-09-13	MAB	2007-09-13	D	91145	MFAT120101	–
NEXT ASSEMBLY		CHECKER		SCALE		SHEET	
FINAL		TN	2007-09-13	1/10		5	