REVISION HISTORY			
REV	DESCRIPTION	DATE	APPROVAL

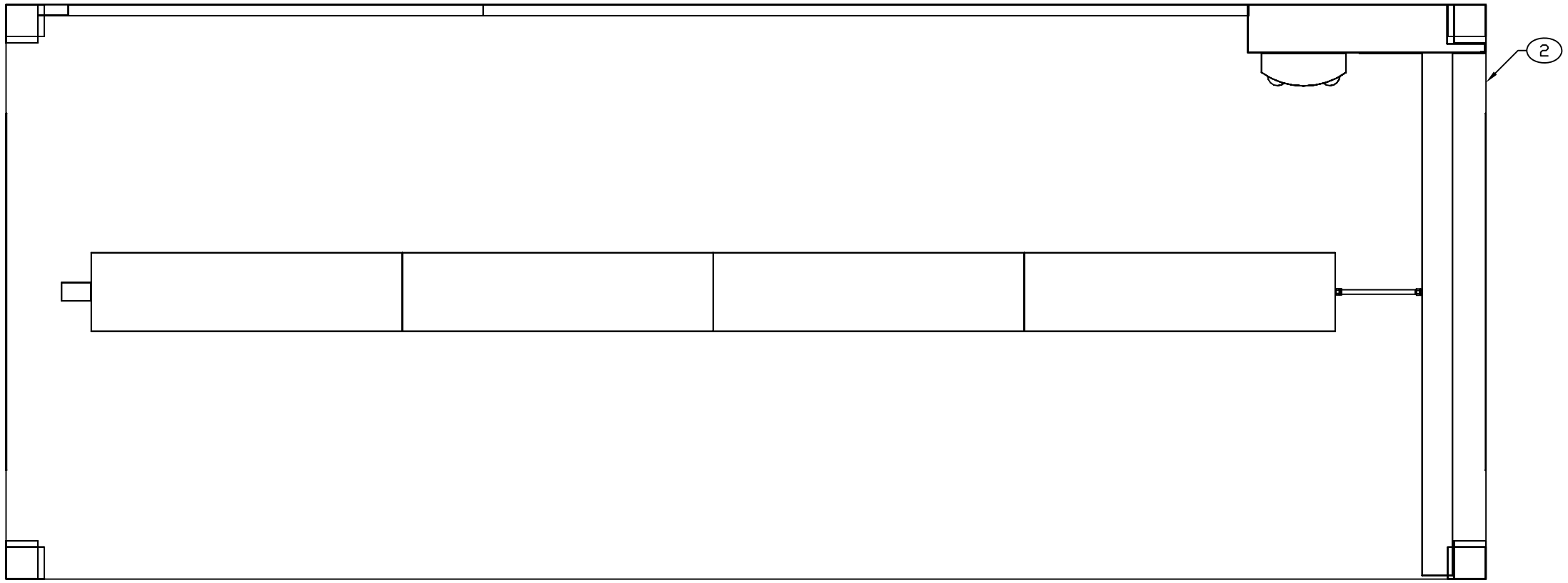

−3 CEILING PLAN

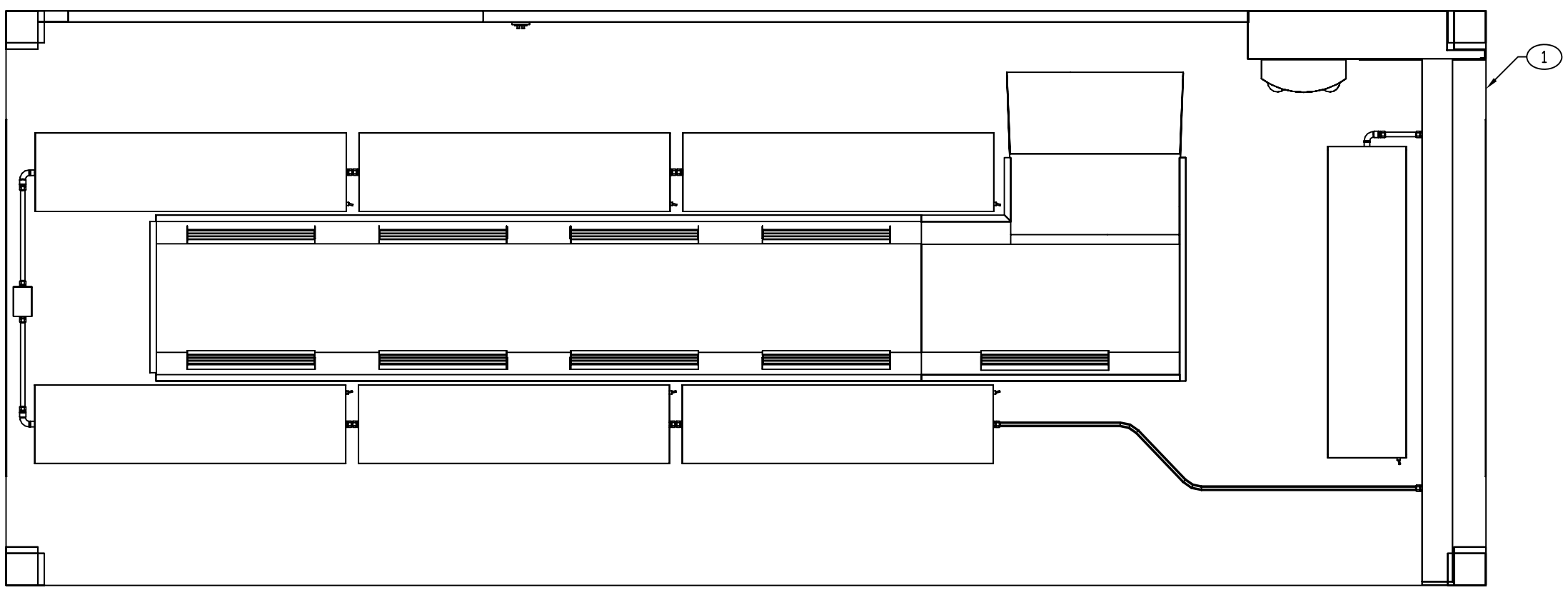

−1 CEILING PLAN

ENGINEER	DATE	DRAWER	DATE	SIZE	CAGE CODE	DRAWING NUMBER	REV
M BEUSTER	2007-09-13	MAB	2007-09-13	D	91145	MFAT110101	−
NEXT ASSEMBLY		CHECKER		SCALE		SHEET	
FINAL		TN	2007-09-13	1/11		3	

REVISION HISTORY			
REV	DESCRIPTION	DATE	APPROVAL
A	REVISED AND PARTIALLY REDRAWN BY M. BEUSTER. (2) ITEM MOVED.	2007-09-20	R A VOTAW

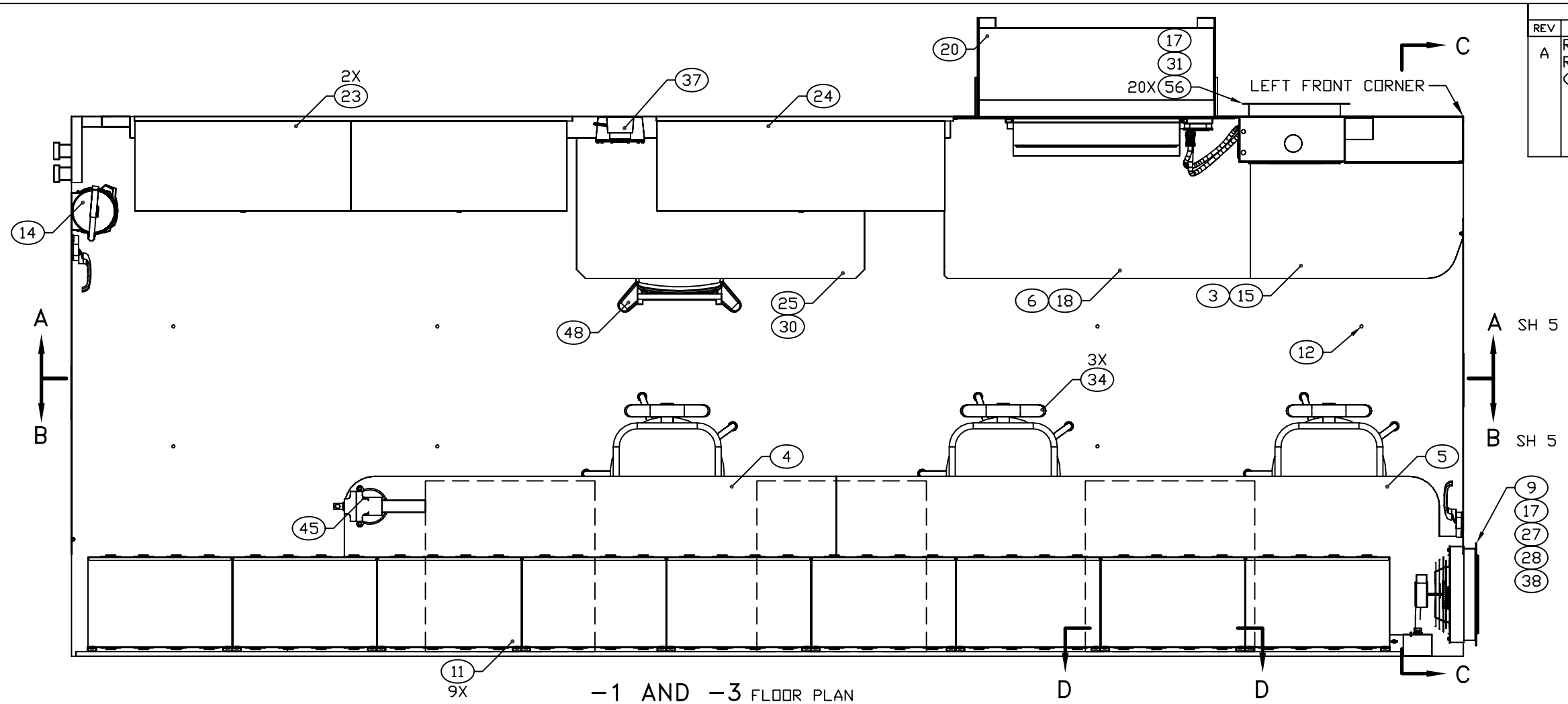

-1 AND -3 FLOOR PLAN

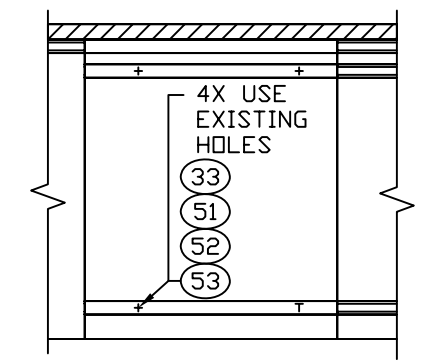

3X SECTION D-D
ROTATED 180°
CABINET INSTALLATION

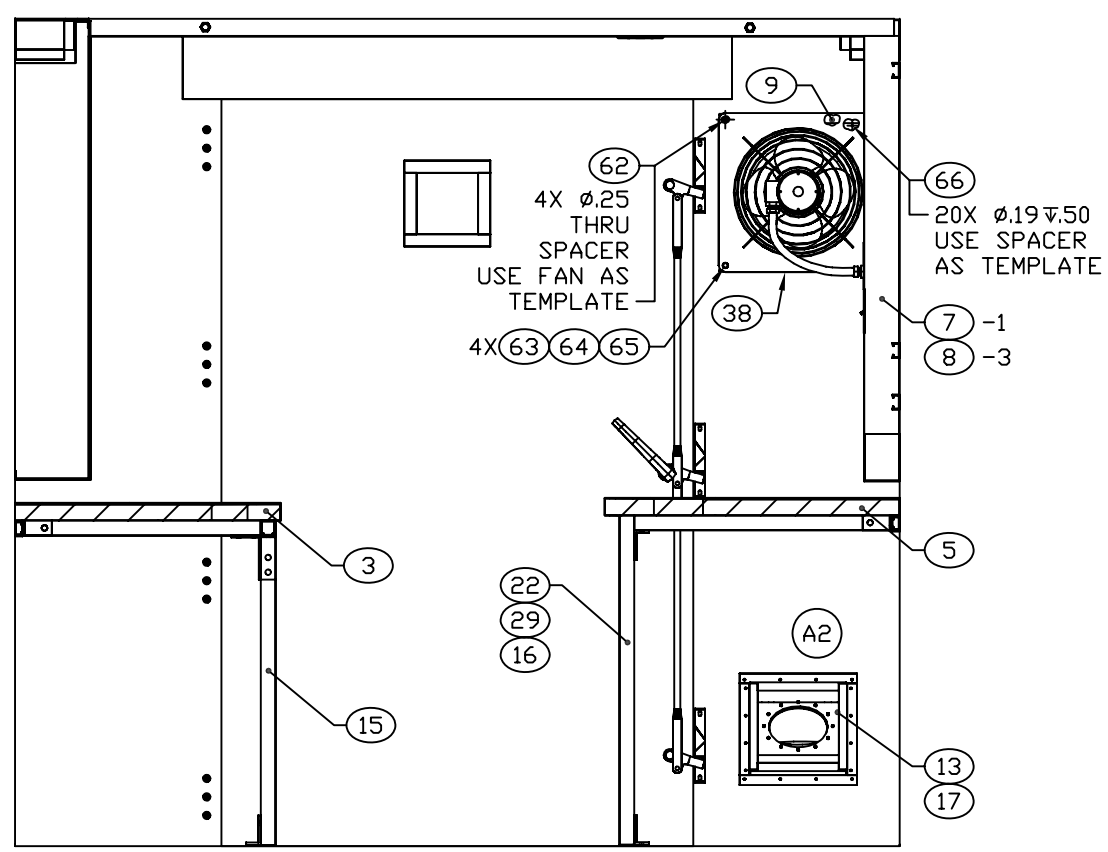

SECTION C-C
ROTATED 90° CCW
SCALE 1/10

ENGINEER	DATE	DRAWER	DATE	SIZE	CAGE CODE	DRAWING NUMBER	REV
M BEUSTER	2007-09-13	MAB	2007-09-13	D	91145	MFAT110101	A
NEXT ASSEMBLY		CHECKER		SCALE		SHEET	
FINAL		TN	2007-09-13	1/11		4	

REVISION HISTORY			
REV	DESCRIPTION	DATE	APPROVAL
A	REVISED AND PARTIALLY REDRAWN BY M. BEUSTER. (2) ITEM MOVED. (4) ITEM ADDED.	2007-09-20	R A VOTAW

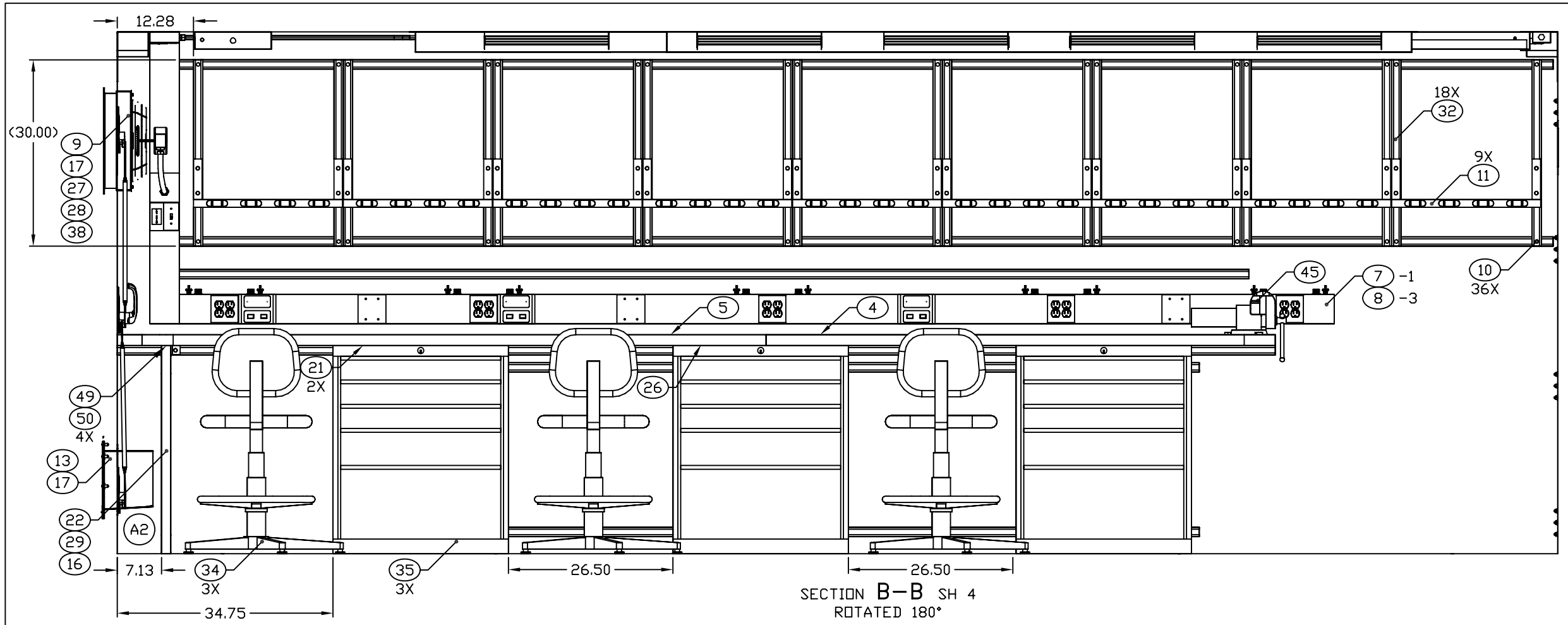

SECTION B–B SH 4
ROTATED 180°

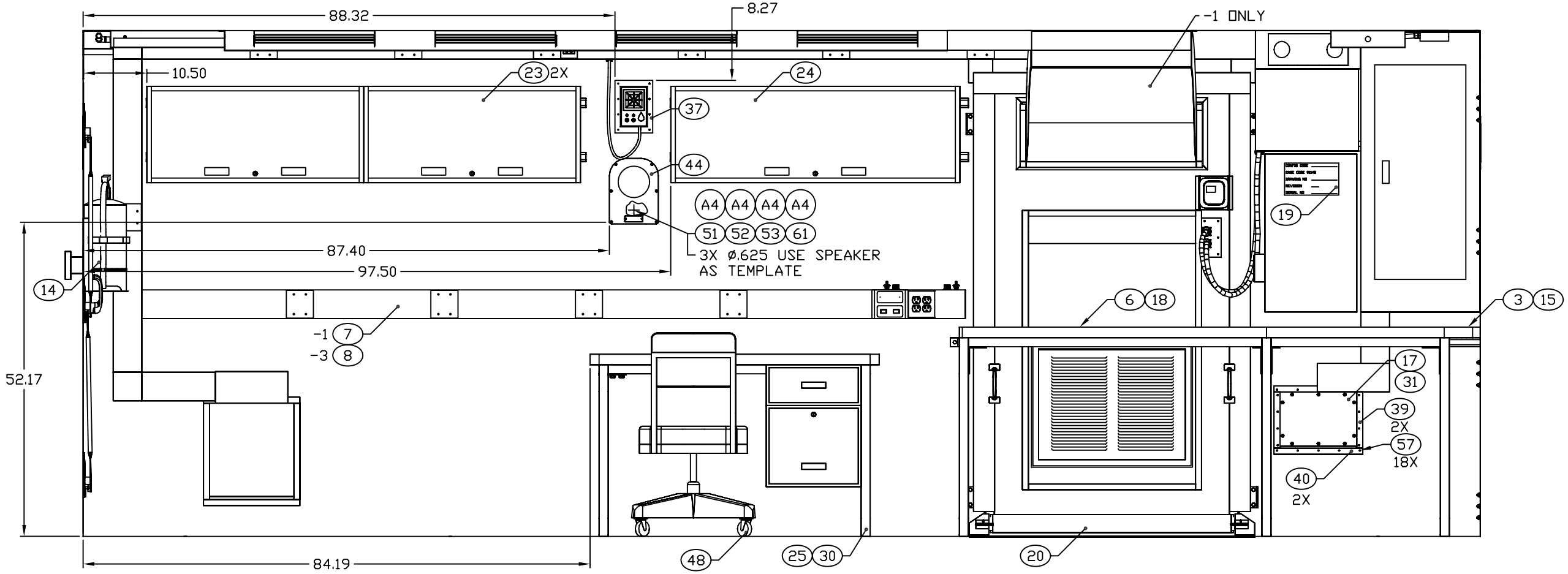

SECTION A–A SH 4

ENGINEER	DATE	DRAWER	DATE	SIZE	CAGE CODE	DRAWING NUMBER	REV
M BEUSTER	2007-09-13	MAB	2007-09-13	D	91145	MFAT110101	A
NEXT ASSEMBLY		CHECKER		SCALE		SHEET	
FINAL		TN	2007-09-13	1/10		5	