REVISION HISTORY			
REV	DESCRIPTION	DATE	APPROVAL
A	(2) DIMENSION ADDED. (4) ITEM ADDED.	01-10-04	R A VOTAW

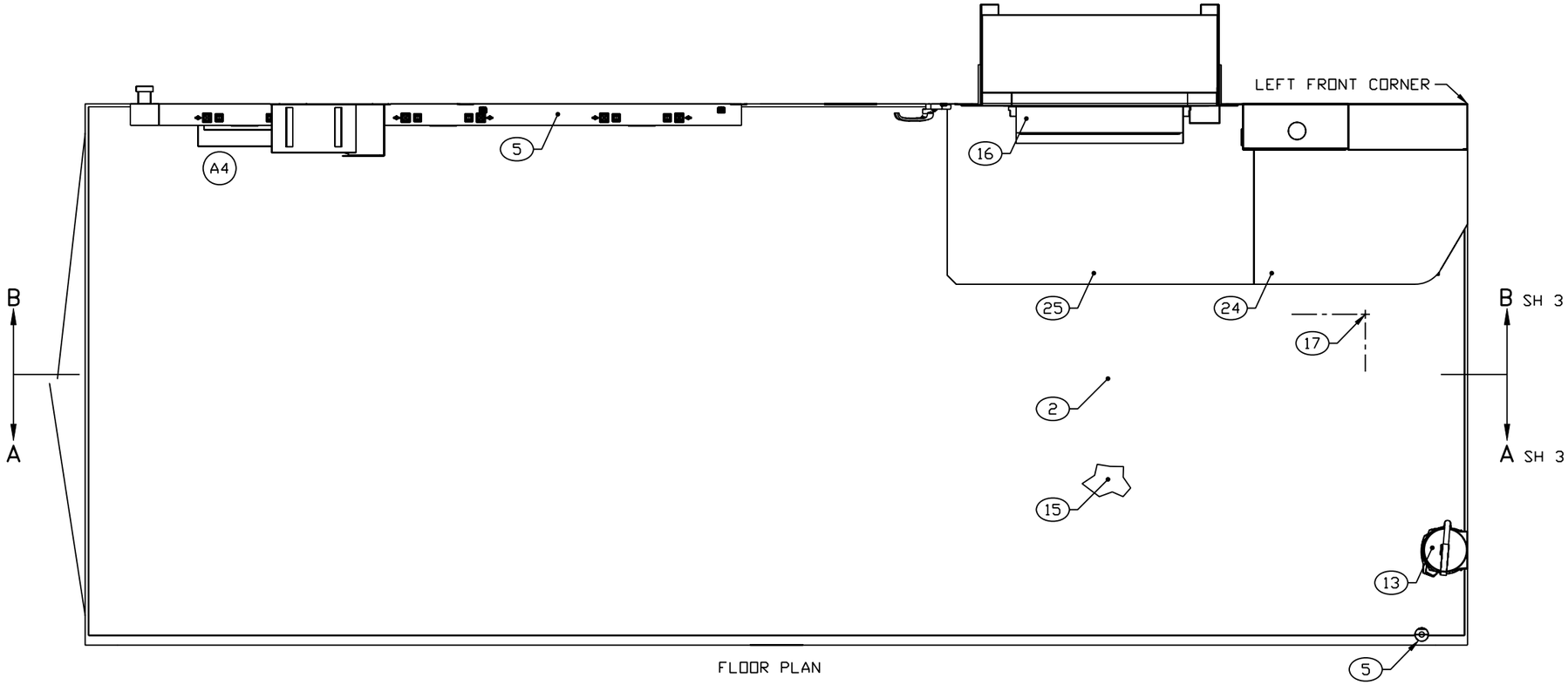

FLOOR PLAN

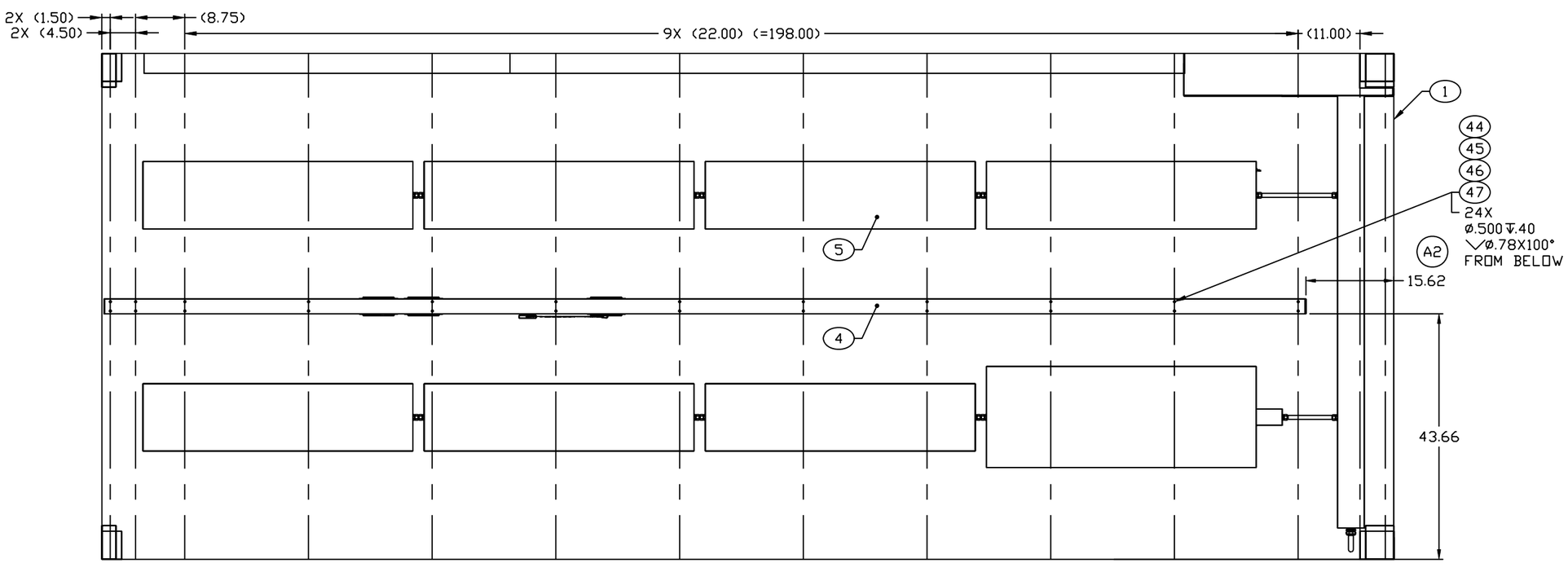

CEILING PLAN

ENGINEER	DATE	DRAWER	DATE	SIZE	CAGE CODE	DRAWING NUMBER	REV
BEUSTER	00-05-24	MAB	01-10-04	D	91145	MFAT090101	A
NEXT ASSEMBLY		CHECKER		SCALE		SHEET	
FINAL		TN	00-05-24	1/11		2	

REVISION HISTORY			
REV	DESCRIPTION	DATE	APPROVAL
A	(3) ITEM MOVED. (5) VIEW ADDED.	01-10-04	R A VOTAW

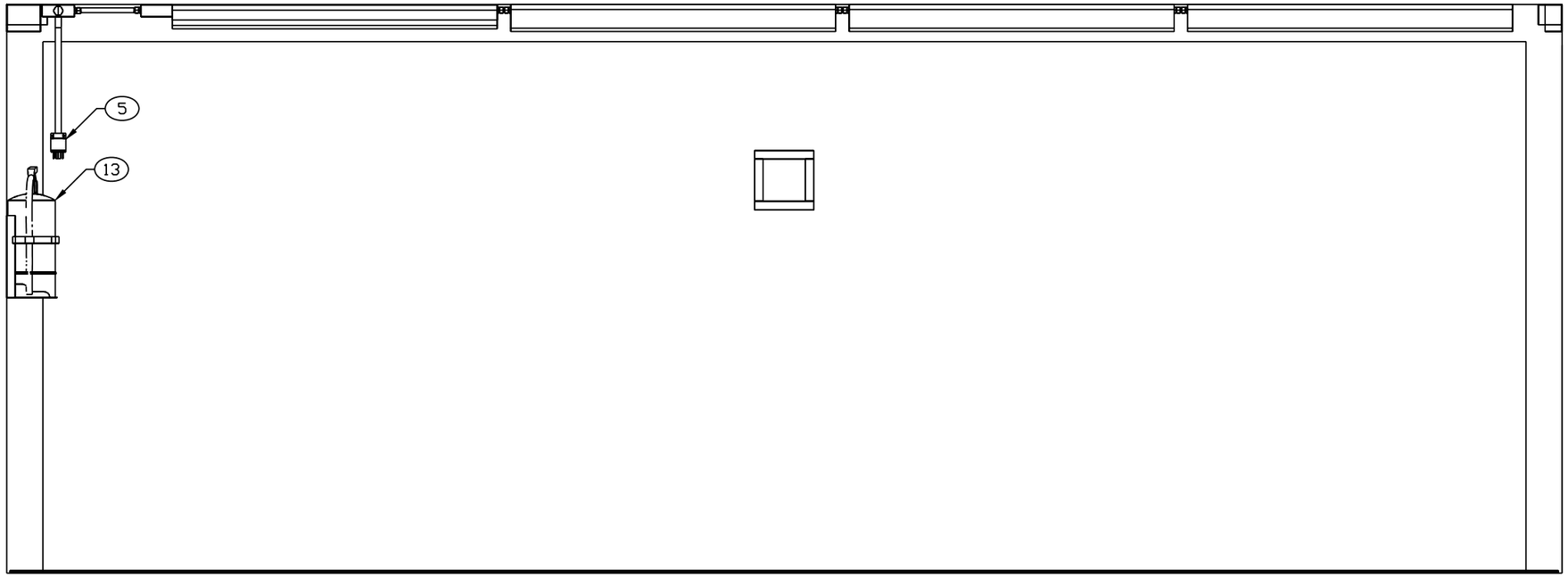

SECTION A–A SH 2
ROTATED 180°

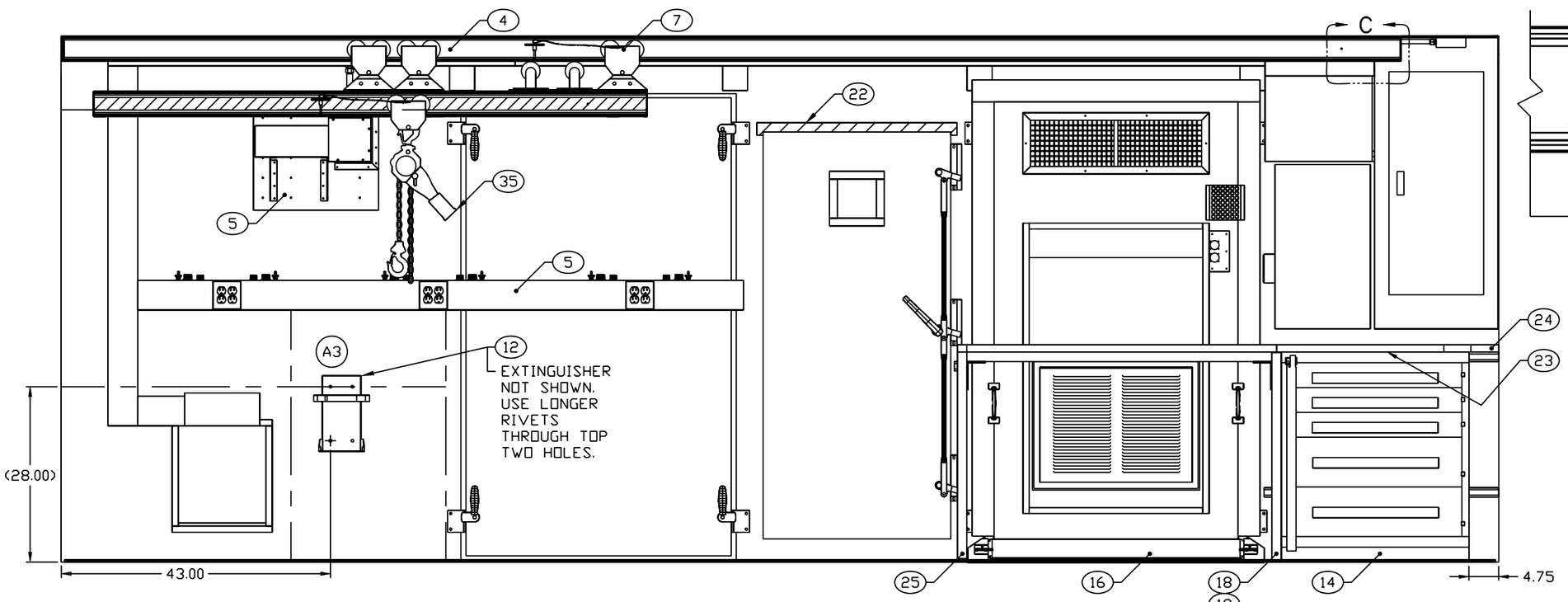

SECTION B–B SH 2

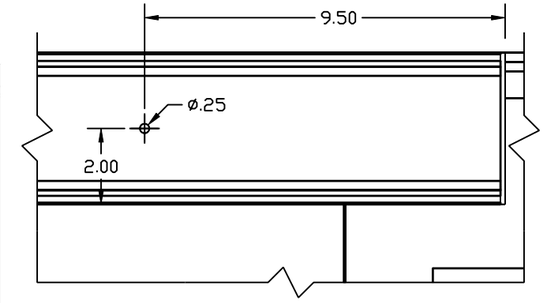

VIEW C
SCALE 1/2
A5

ENGINEER	DATE	DRAWER	DATE	SIZE	CAGE CODE	DRAWING NUMBER	REV
BEUSTER	00-05-30	MAB	01-10-04	D	91145	MFAT090101	A
NEXT ASSEMBLY		CHECKER					
FINAL		TN	00-05-30	SCALE 1/10		SHEET 3	