REVISION HISTORY			
REV	DESCRIPTION	DATE	APPROVAL

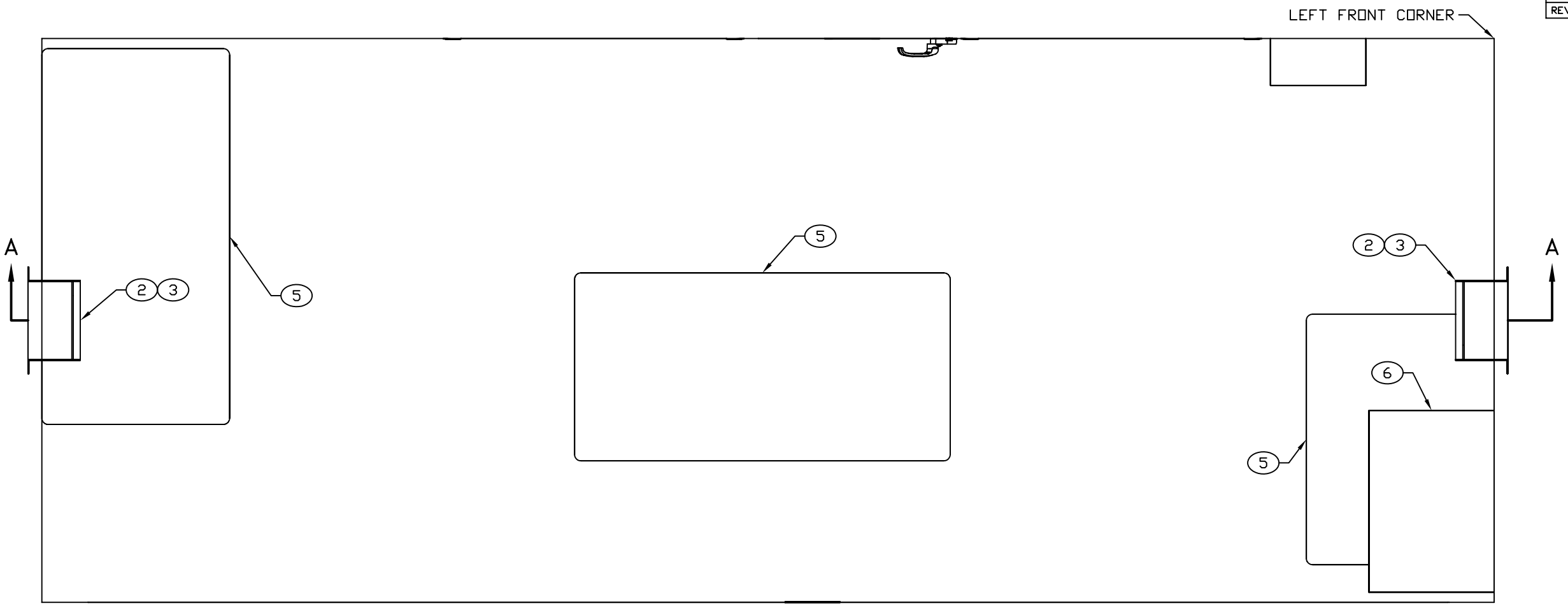

FLOOR PLAN

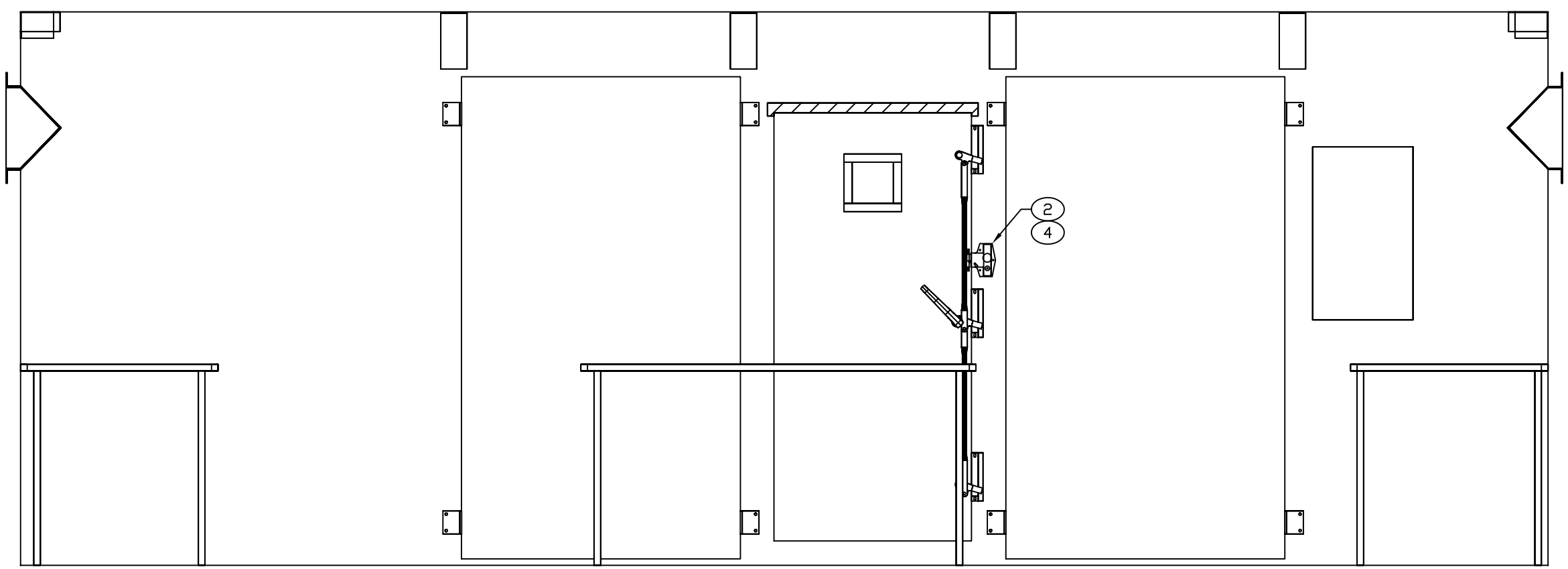

SECTION A–A

ENGINEER	DATE	DRAWER	DATE	SIZE	CAGE CODE	DRAWING NUMBER	REV
T NGUYEN	06-07-11	TN	06-07-11	D	91145	MFAM030101	–
NEXT ASSEMBLY		CHECKER		SCALE		SHEET	
FINAL		MAB	06-07-12	1/10		2	