REVISION HISTORY			
REV	DESCRIPTION	DATE	APPROVAL
B	REVISED AND PARTIALLY REDRAWN BY M. BEUSTER. SECTION MOVED FROM SHEET 5.	2004-10-07	R A VOTAW

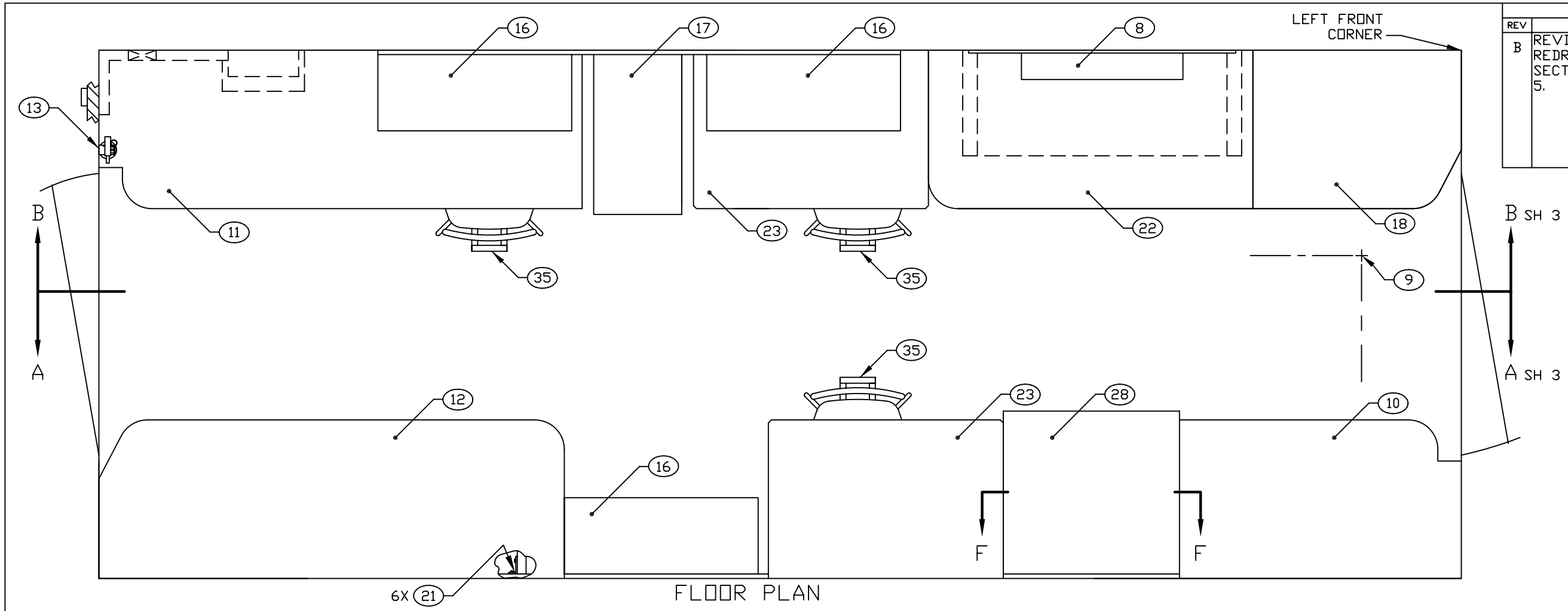

FLOOR PLAN

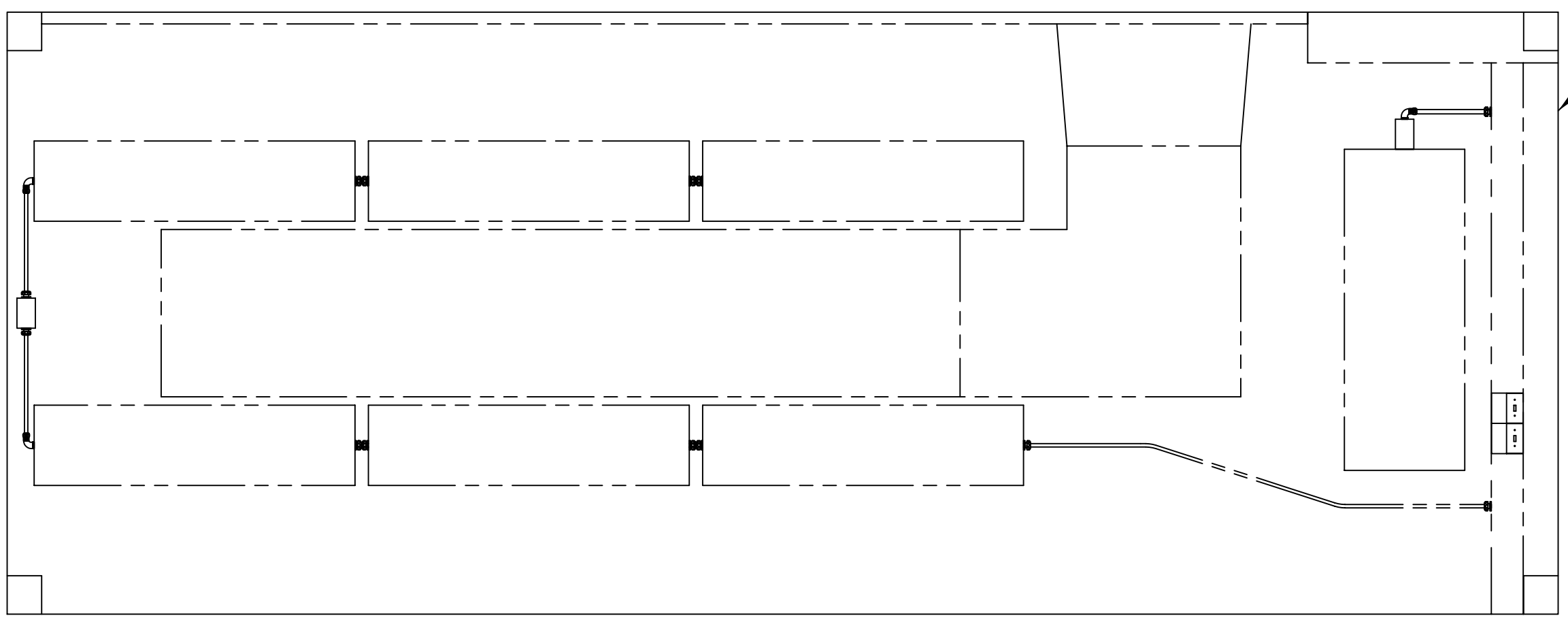

CEILING PLAN

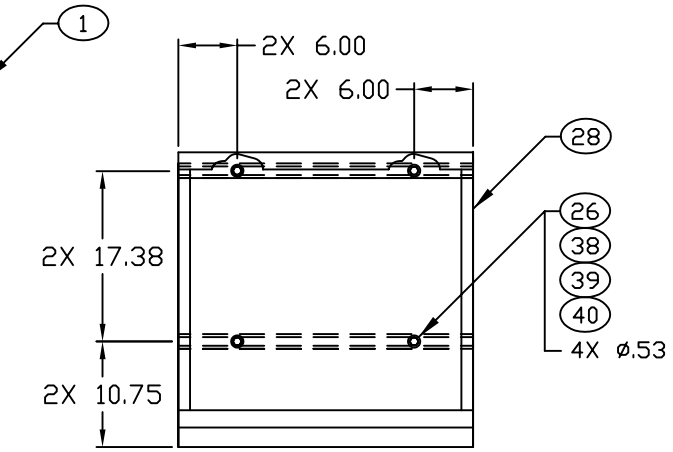

B SECTION F-F
ROTATED 180°

ENGINEER	DATE	DRAWN BY	DATE	SIZE	CAGE CODE	DWG NO	REV
P. PHAN	91-10-16	PRV	94-08-17	D	91145	MFAM010201	B
NEXT ASSEMBLY		CHECKER		SCALE		SH	
FINAL		MAB	92-01-03	1/10		2	

REVISION HISTORY			
REV	DESCRIPTION	DATE	APPROVAL
B	REVISED AND PARTIALLY REDRAWN BY M. BEUSTER. (1) NOTE DELETED. (8) ITEM ADDED.	2004-10-07	R A VOTAW

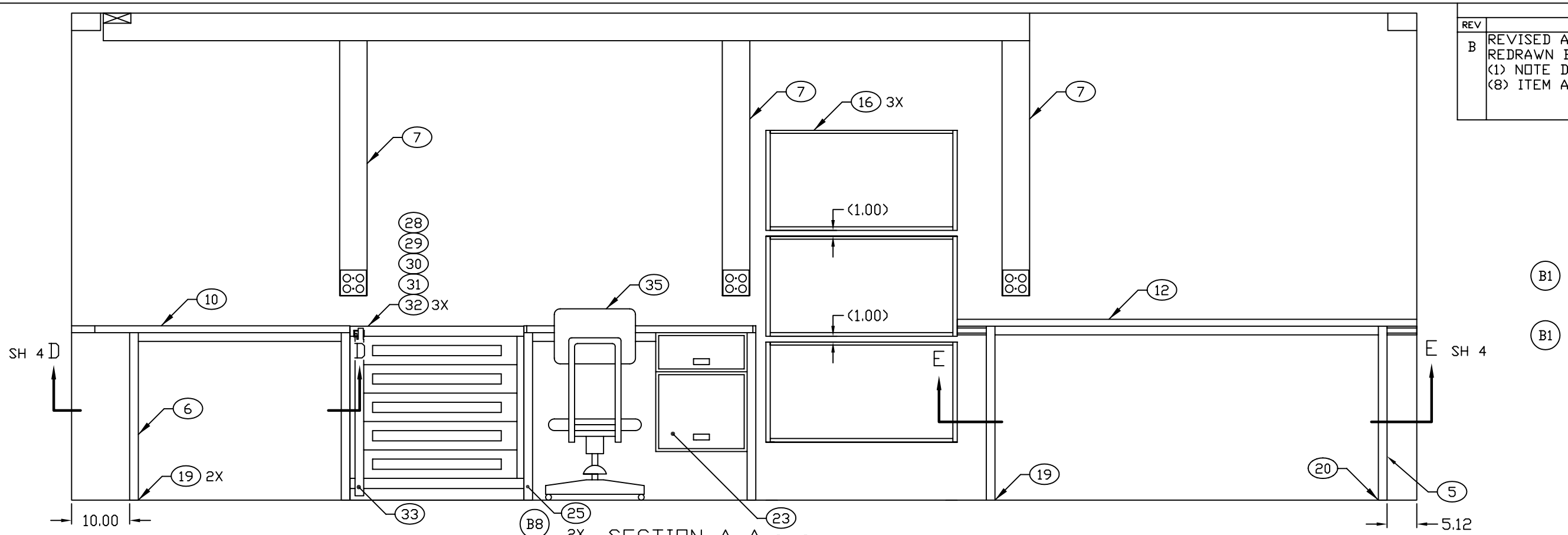

SECTION A-A SH 2

ROTATED 180°

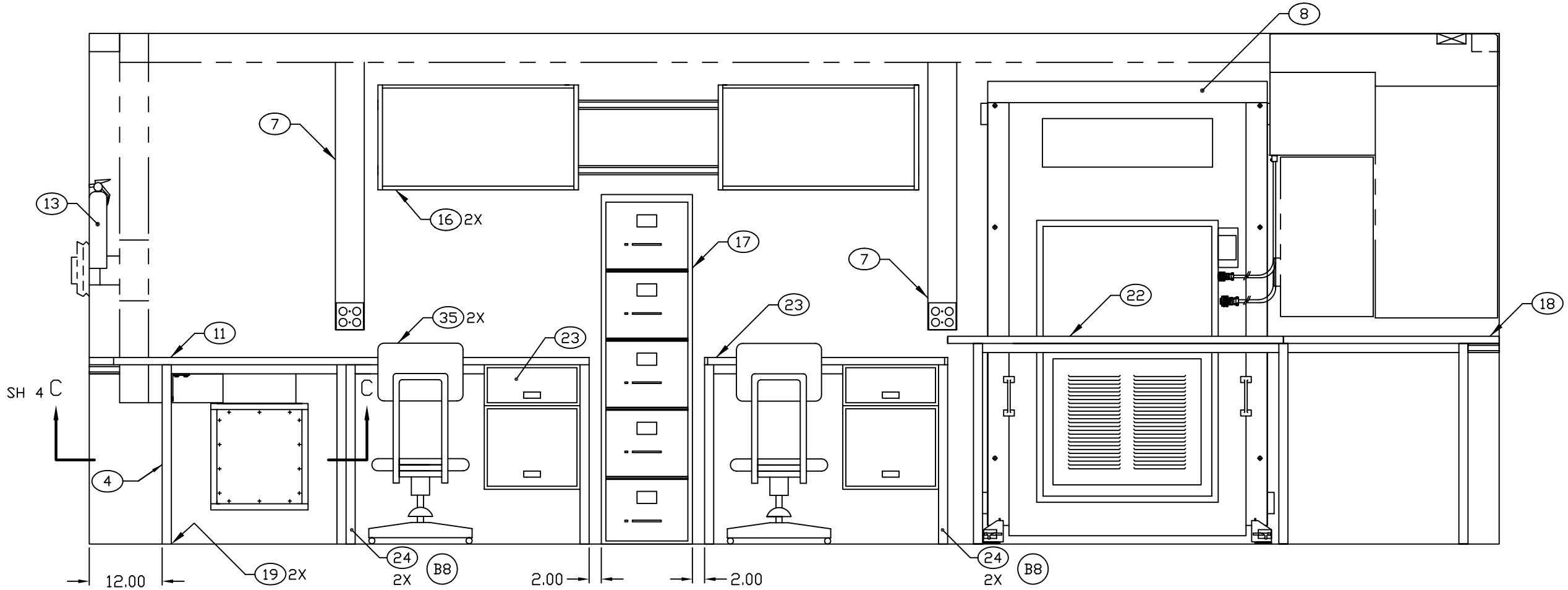

SECTION B-B SH 2

ENGINEER	DATE	DRAWN BY	DATE	SIZE	CAGE CODE	DWG NO	REV
P. PHAN	91-10-16	PRV	94-10-19	D	91145	MFAM010201	B
NEXT ASSEMBLY		CHECKER		SCALE		SH	
FINAL		MAB	92-01-03	1/10		3	