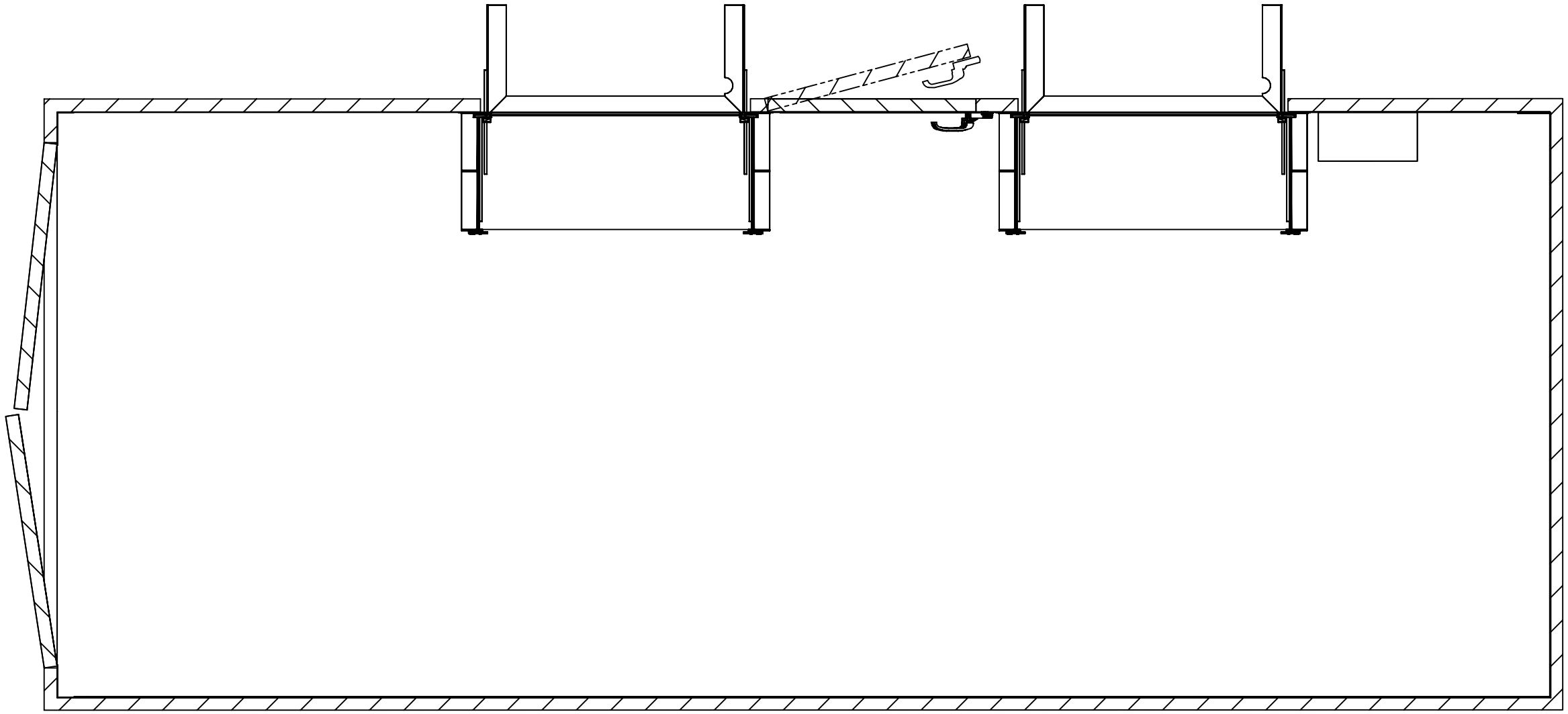

FLOOR PLAN

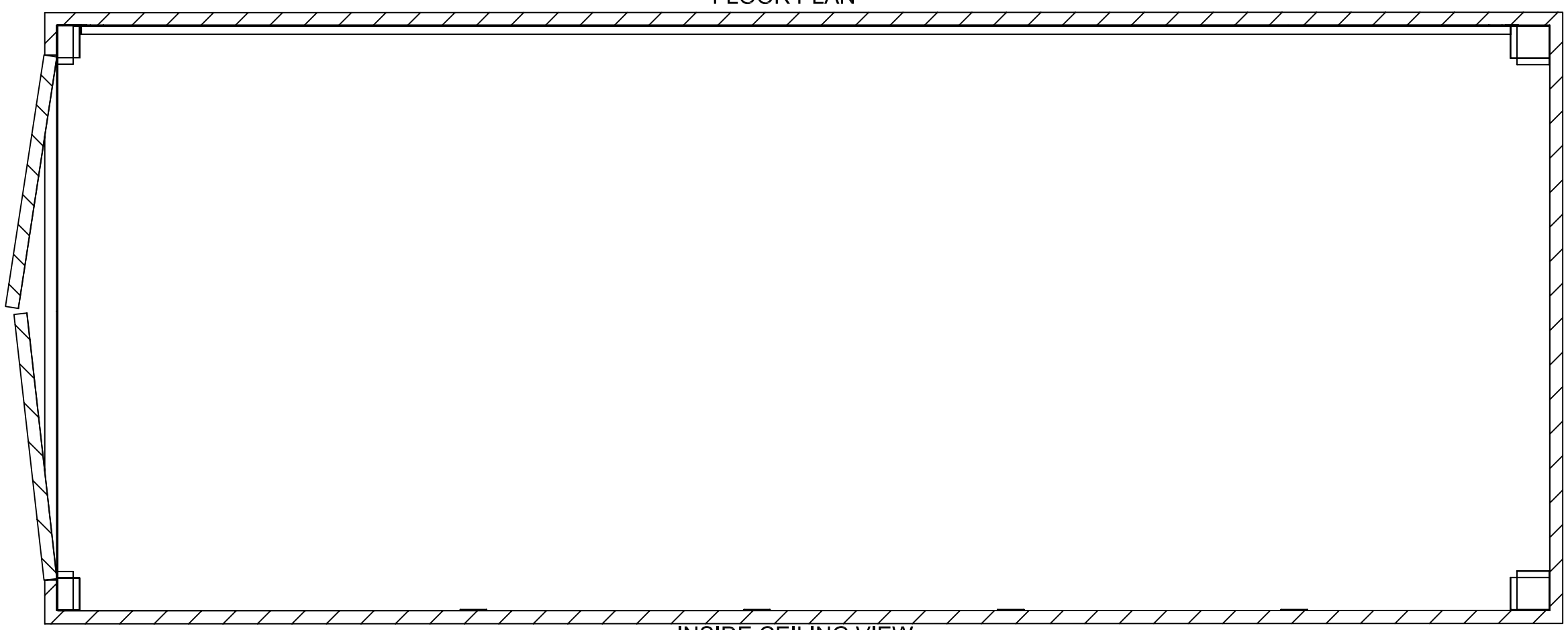

INSIDE CEILING VIEW

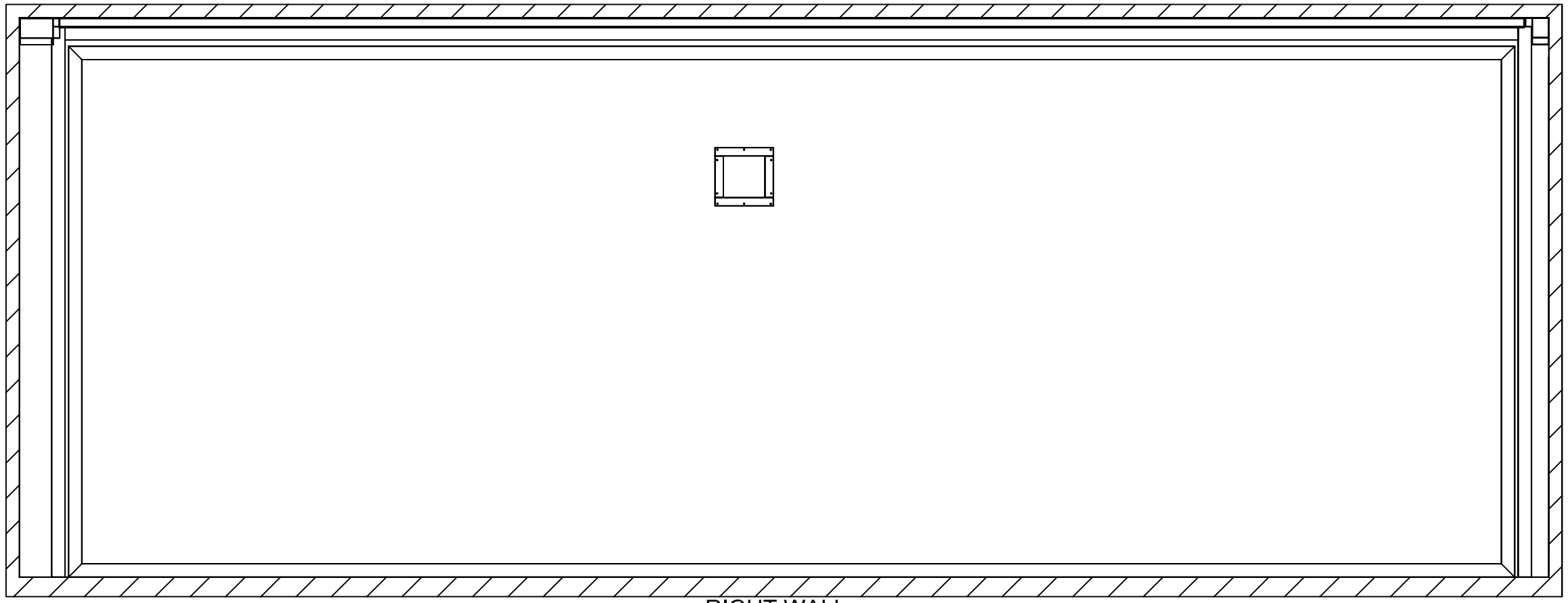

RIGHT WALL

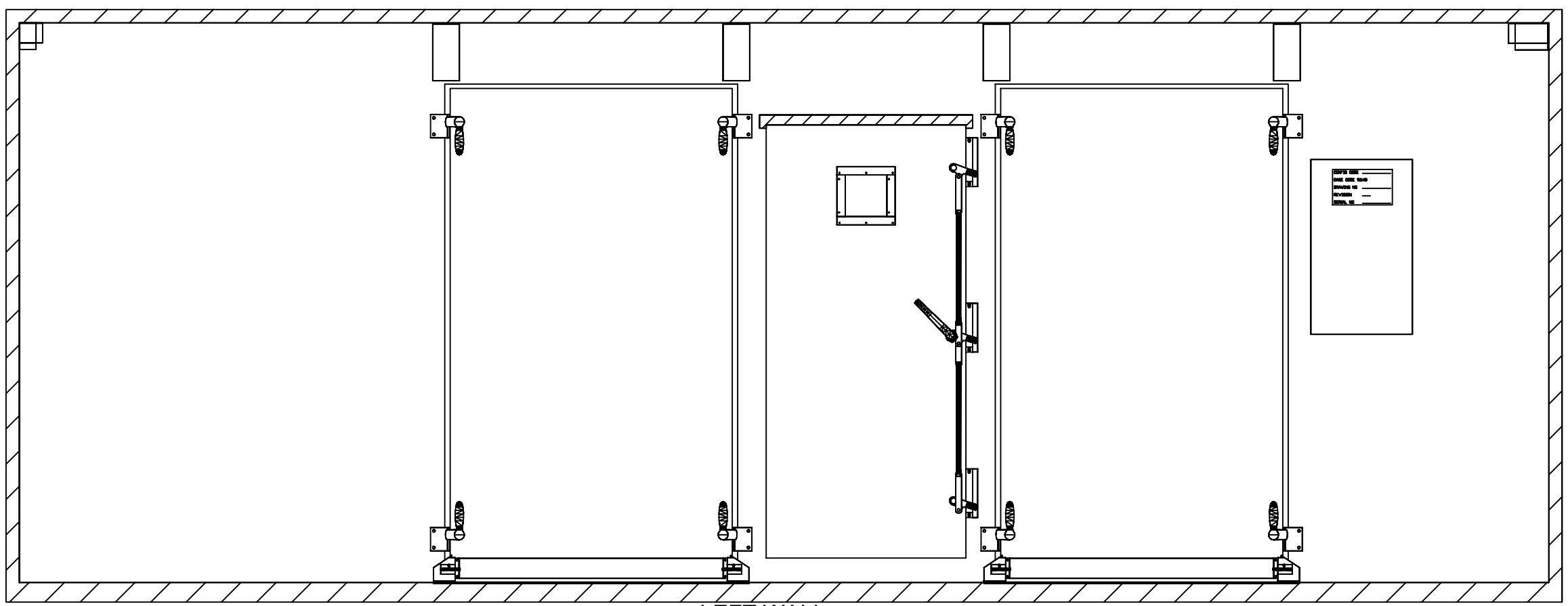

LEFT WALL

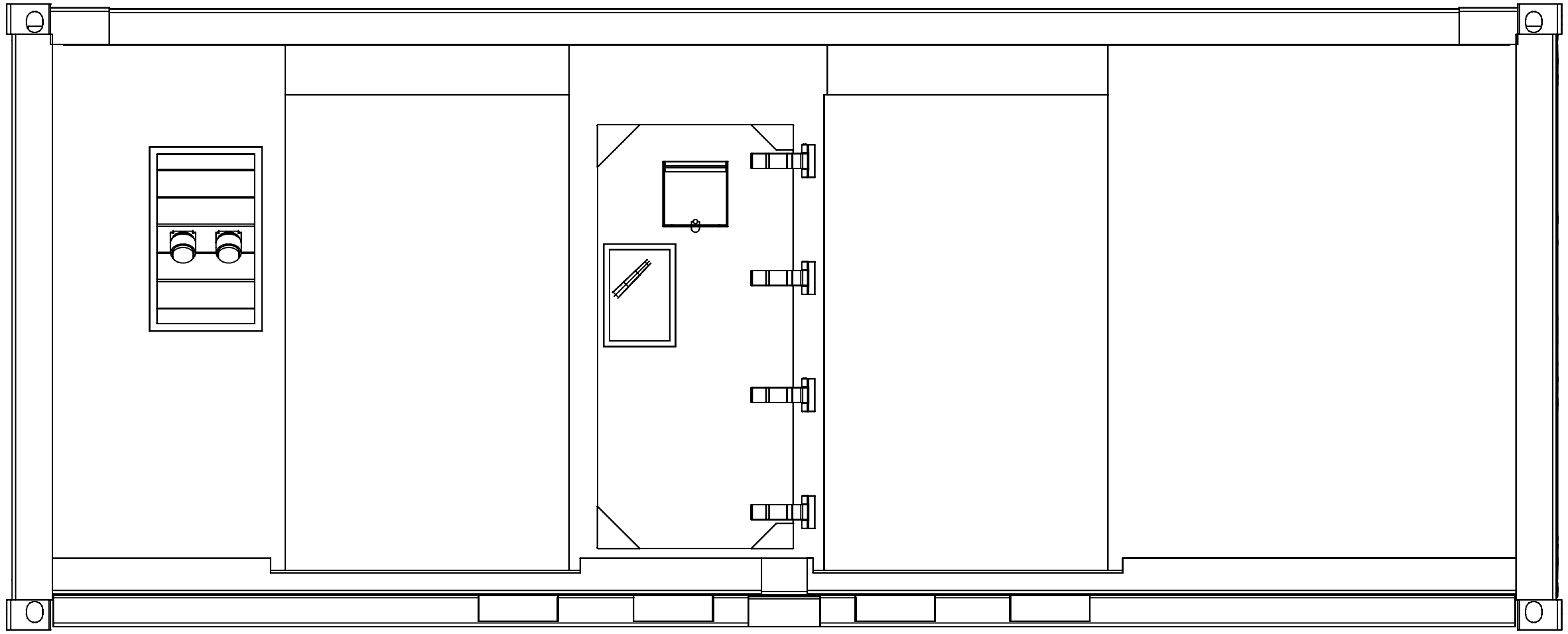

LEFT SIDE

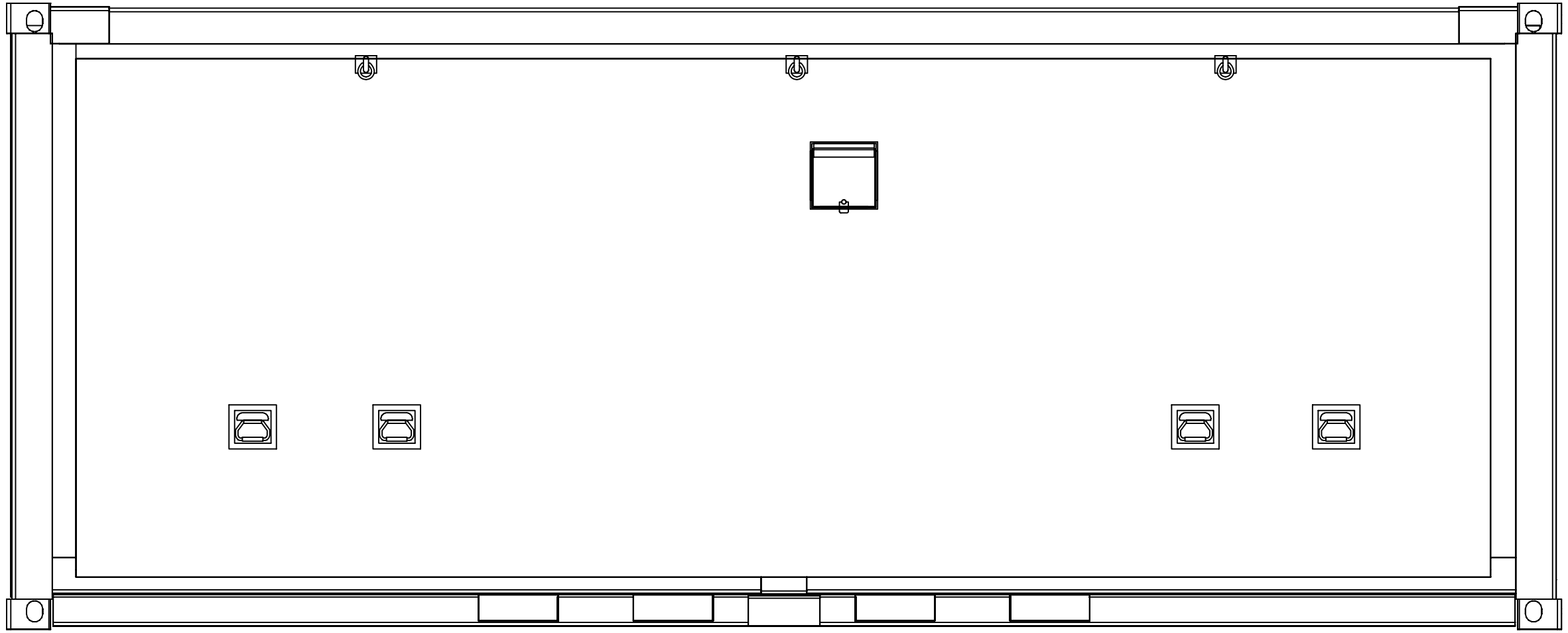
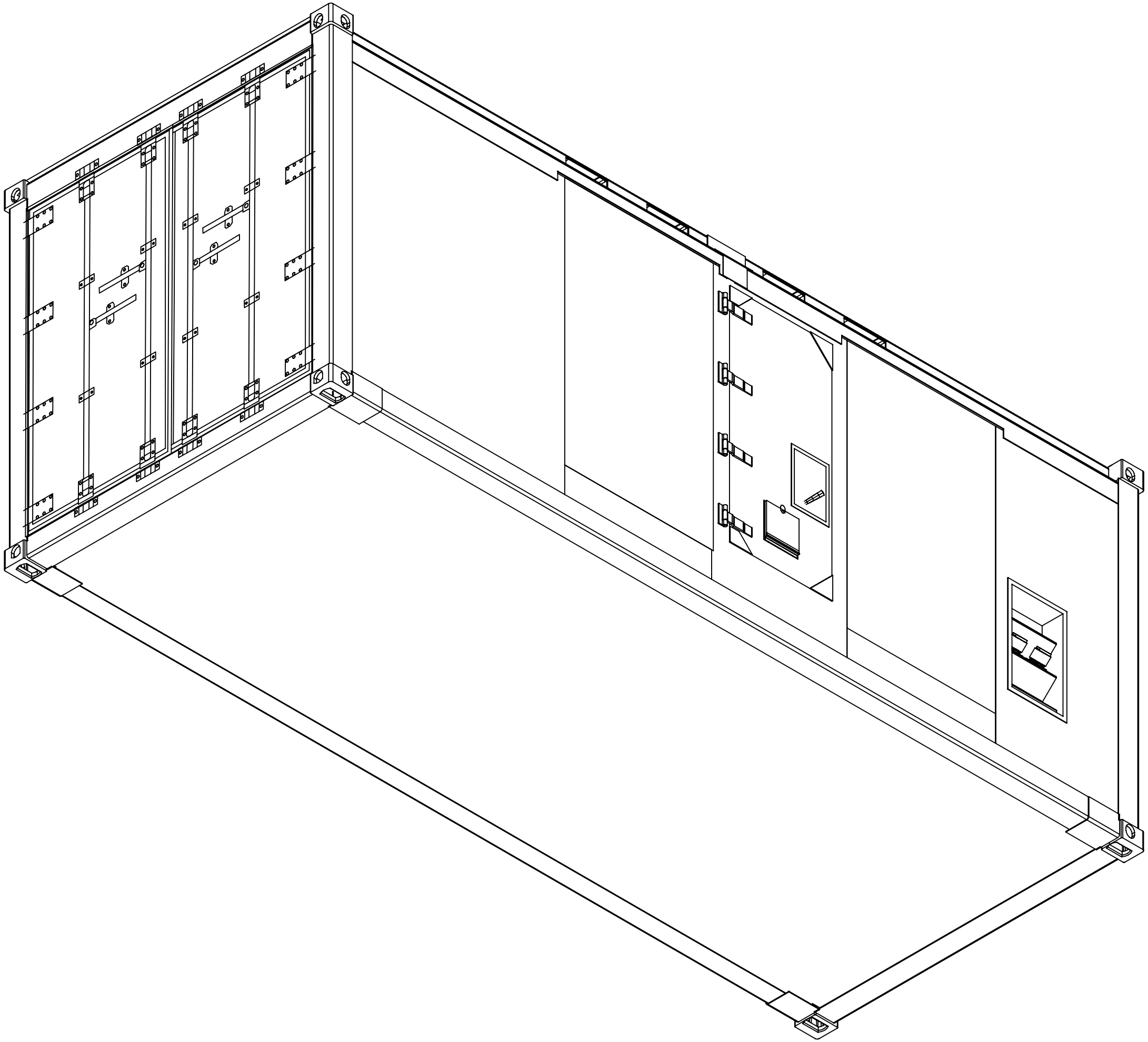
RIGHT SIDE