FLIGHT CONTROLS

TABLE OF CONTENTS

Paragraph Number	Title	Effectivity	Page Number
67-1	Flight Controls	TH-57C	67-03
67-2	Collective Pitch Control Stick	TH-57C	67-04
67-3	Collective Pitch Control Rigging	TH-57C	67-04
67-4	Collective Friction Adjustment	TH-57C	67-8
67-5	Cyclic Control System	TH-57C	67-9
67-6	Removal—Cyclic Control Stick	TH-57C	67-9
67-7	Installation—Cyclic Control Stick	TH-57C	67-9
67-8	Cyclic Stick Grip	TH-57C	67-9
67-9	Adjustment—Cyclic Friction	TH-57C	67-9
67-10	Cyclic Control Linkage	TH-57C	67-11
67-11	Removal—Cyclic Control Linkage	TH-57C	67-11
67-12	Installation—Cyclic Control Linkage	TH-57C	67-11
67-13	Control Tube Actuator Assemblies	TH-57C	67-16
67-14	Removal—Control Tube Actuator Assembly	TH-57C	67-16
67-15	Inspection—Control Tube Actuator Assembly	TH-57C	67-16
67-16	Repair—Control Tube Actuator Assembly	TH-57C	67-18
67-17	Installation—Control Tube Actuator Assembly	TH-57C	67-18
67-18	Rigging—Cyclic Controls	TH-57C	67-19
67-19	Adjustment of Pitch Angle—Main Rotor Hub and Blades	TH-57C	67-25
67-20	Electrical Null—Control Tube Actuator Assembly	TH-57C	67-26
67-21	Anti-torque controls	TH-57C	67-26
67-22	Tail Rotor Control Pedals and Adjuster	TH-57C	67-26
67-23	Removal—Tail Rotor Control Pedals and Adjuster	TH-57C	67-26
67-24	Inspection—Tail Rotor Control Pedals and Adjuster	TH-57C	67-29
67-25	Installation—Tail Rotor Control Pedals and Adjuster	TH-57C	67-29
67-26	Connecting Linkage-Tail Rotor System	TH-57C	67-30
67-27	Removal-Connecting Linkage	TH-57C	67-30
67-28	Inspection Connecting Linkage	TH-57C	67-30
67-29	Installation-Tail Rotor Control Linkage	TH-57C	67-35
67-30	Rigging-Tail Rotor Controls	TH-57C	67-36
67-31	Dynamic Balancing-Tail Rotor Forces	TH-57C	67-42
67-32	Flight Controls	TH-57B	67-43
67-33	Collective Pitch Stick	TH-57B	67-43
67-34	Cyclic Stick Grip	TH-57B	67-43
67-35	Force Trim	TH-57B	67-43
67-36	Rigging Force Trim	TH-57B	67-45
67-37	Removal - Magnetic Brake	TH-57B	67-45

TABLE OF CONTENTS (CONT.)

Paragraph Number	Title	Effectivity	Page Number
67-38	Inspection - Magnetic Brake	TH-57B	67-45
67-39	Installation - Magnetic Brake	TH-57B	67-45
67-40	Removal - Force Gradient	TH-57B	67-45
67-41	Inspection - Force Gradient	TH-57B	67-49
67-42	Disassembly - Force Gradient Assembly	TH-57B	67-49
67-43	Inspection - Force Gradient Assembly	TH-57B	67-49
67-44	Repair or Replacement - Force Gradient Assembly	TH-57B	67-49
67-45	Reassembly - Force Gradient Assembly	TH-57B	67-49
67-46	Installation - Force Gradient	TH-57B	67-49

LIST OF FIGURES

Figure Number	Title	Effectivity	Page Number
67-1	Flight Control System	TH-57C	67-03
67-2	Collective Stick	TH-57C	67-05
67-3	Collective Control Rigging	TH-57C	67-06
67-4	Collective Friction Adjustment	TH-57C	67-10
67-5	Cyclic Control System	TH-57C	67-13
67-6	Inner Ring/Pivot Sleeve	TH-57C	67-17
67-7	Cyclic Control Rigging	TH-57C	67-21
67-8	Rod End Fitting Adjustments	TH-57C	67-27
67-9	Tail Rotor Pitch Control Assembly	TH-57C	67-31
67-10	Tail Rotor Aft Pitch Control System	TH-57C	67-37
67-11	Anti-Torque Control System Rigging	TH-57C	67-40
67-12	Balance of Tail Rotor Pedal Forces	TH-57C	67-44
67-13	Flight Control System	TH-57B	67-46
67-14	Collective Stick	TH-57C	67-47
67-15	Cyclic Stick Grip	TH-57C	67-48
67-16	Cyclic Control Rigging	TH-57B	67-50
67-17	Fore, Aft and Lateral Force Gradient	TH-57B	67-52

FLIGHT CONTROLS

67-1 FLIGHT CONTROLS.

This chapter contains information and maintenance instructions for the TH-57C IFR flight control installation (Figure 67-1) which differ from the TH-57B. The differences include the pilot and copilot cyclic stick grips (Figure 67-15), pivot at base of pilots cyclic stick, control tube actuators (8, Figure 67-1), lever at base of copilots cyclic stick, pilots collective stick control box (Figure 67-2), quick disconnect copilot cyclic and collective sticks, copilots directional control pedals and cyclic stick trim system.

1. **Tail Rotor Control System**
2. **Cyclic Control System**
3. **Collective Control System**
4. **Mixing Lever Assembly**
5. **Cyclic Servo Actuator**
6. **Collective Servo Actuator**
7. **Swashplate Assembly**
8. **Control Tube Actuators**
9. **Pitch Trim Damper**
10. **Roll Computer**
11. **Pitch Computer**
12. **Roll Trim Damper**
13. **Yaw Computer**
14. **Yaw Actuator**
15. **Yaw Trim Damper**

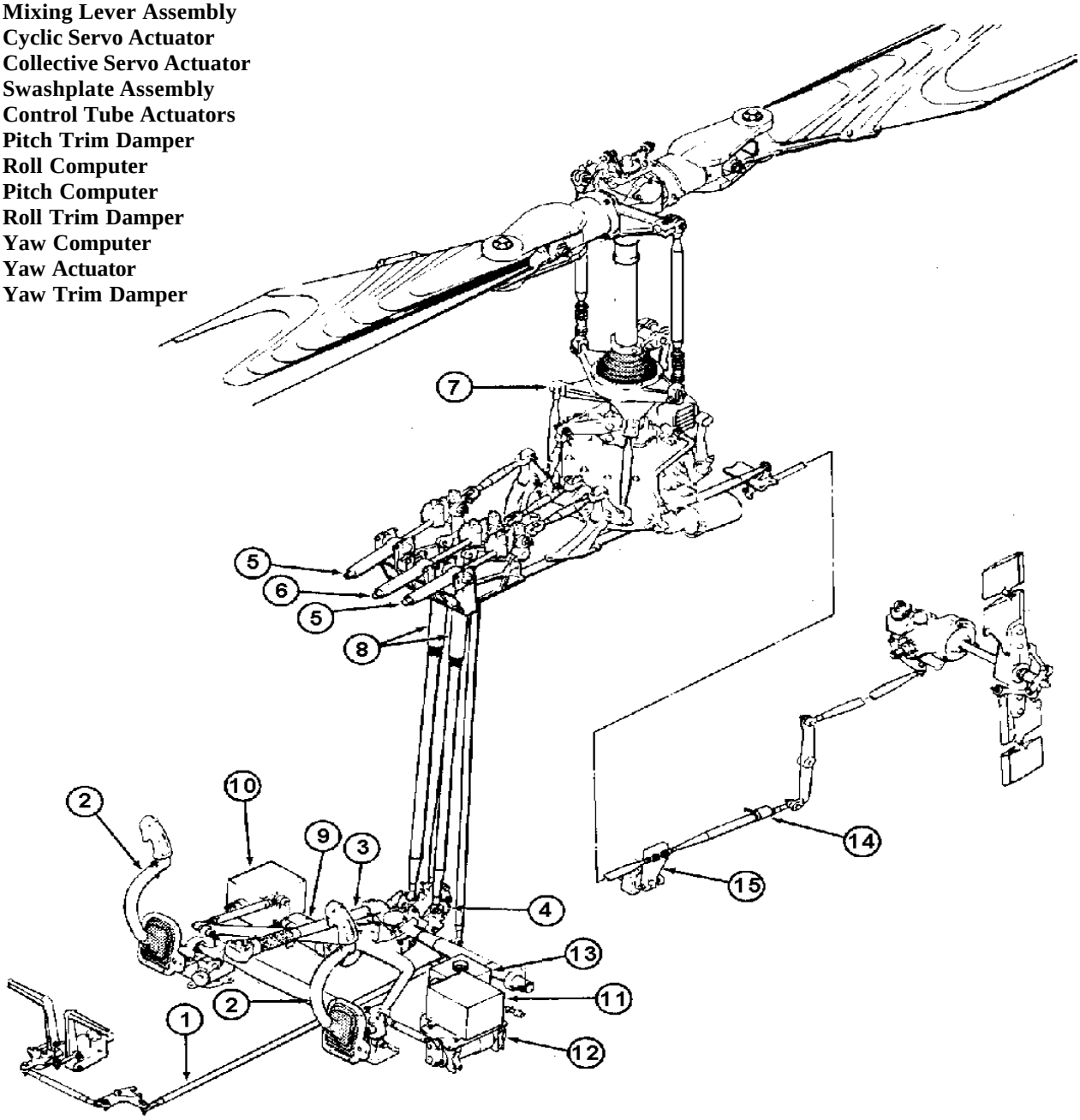

Figure 67-1. Flight Control System

67-2. COLLECTIVE PITCH CONTROL STICK.

The collective stick incorporates a twist grip throttle (6, Figure 67-2) for control of engine power in cutoff, ground idle and full open position. Engine idle release control (5) allows twist grip to pass flight idle and move to full open. Switches are installed on the switch plate for control of starter (2), searchlight (3), searchlight control (9), and GOV RPM (4). A switch guard (1) is located over the starter switch to prevent inadvertent activation and is spring loaded closed. Refer to Chap. 76 for throttle rigging.

67-3. COLLECTIVE PITCH CONTROL RIGGING.

NOTE

Rig collective pitch controls with hydraulic boost OFF.

NOTE

Ensure hydraulic boost switch is OFF when rigging of cyclic pitch control is performed.

1. Ensure all fixed length control tubes and links in collective pitch control systems are installed.
2. Adjust collective friction (paragraph 67-4).

NOTE

AN5 rigging bolt (3, Figure 67-7) is inserted into position, not threaded.

3. Center cyclic stick by adjusting cyclic friction adjuster (1) to minimum and install AN5 rigging bolt (3) at base of pilot cyclic stick pivot support (2).
4. Tighten friction adjuster (1) to keep cyclic stick from moving. Remove AN5 rigging bolt (3).
5. Remove cotter pin (2, Figure 67-3), nut (3), washers (4), and bolt (5) and disconnect control tube (1) from bellcrank (49). Ensure that link assembly (38) is adjusted to 2.25 inches (57.15 mm).
6. Position pilot collective stick (39) 2.40 inches (60.96 mm) above forward edge of seat structure (50) (detail D). Remove upholstery as required to access seat structure. Tighten friction to keep pilot collective stick in this position.
7. Position bellcrank (49) against stop on cylinder support assembly (51) as shown in detail B and E.
8. Hold pilot collective stick (39) against the low pitch stop and bottom the servo actuator valve shown in view C.

CAUTION!

MAXIMUM OF 1.0 INCH (25.40 MM) EXPOSED THREADS ON ALL ADJUSTABLE ROD ENDS.

9. Adjust control tube (1) to fit to bellcrank (49) with bolt (5), two washers (4), and nut (3). Install cotter pin (2).
10. Remove cotter pin (27), nut (28), washers (29), and bolt (30) and disconnect control tube (2) from collective lever assembly (52).
11. Position collective lever assembly to position shown in view A.
12. Adjust control tube (2) to fit. Connect control tube to collective lever assembly (52) with bolt (30), two washers (29), and nut (28).. Install cotter pin (27).
13. Refer to Paragraph 67-19 for swashplate to main rotor blade pitch link rigging instructions. Refer to paragraph 67-18, step 22, for clearance check between pivot sleeve and inner ring after collective and cyclic rigging is complete.

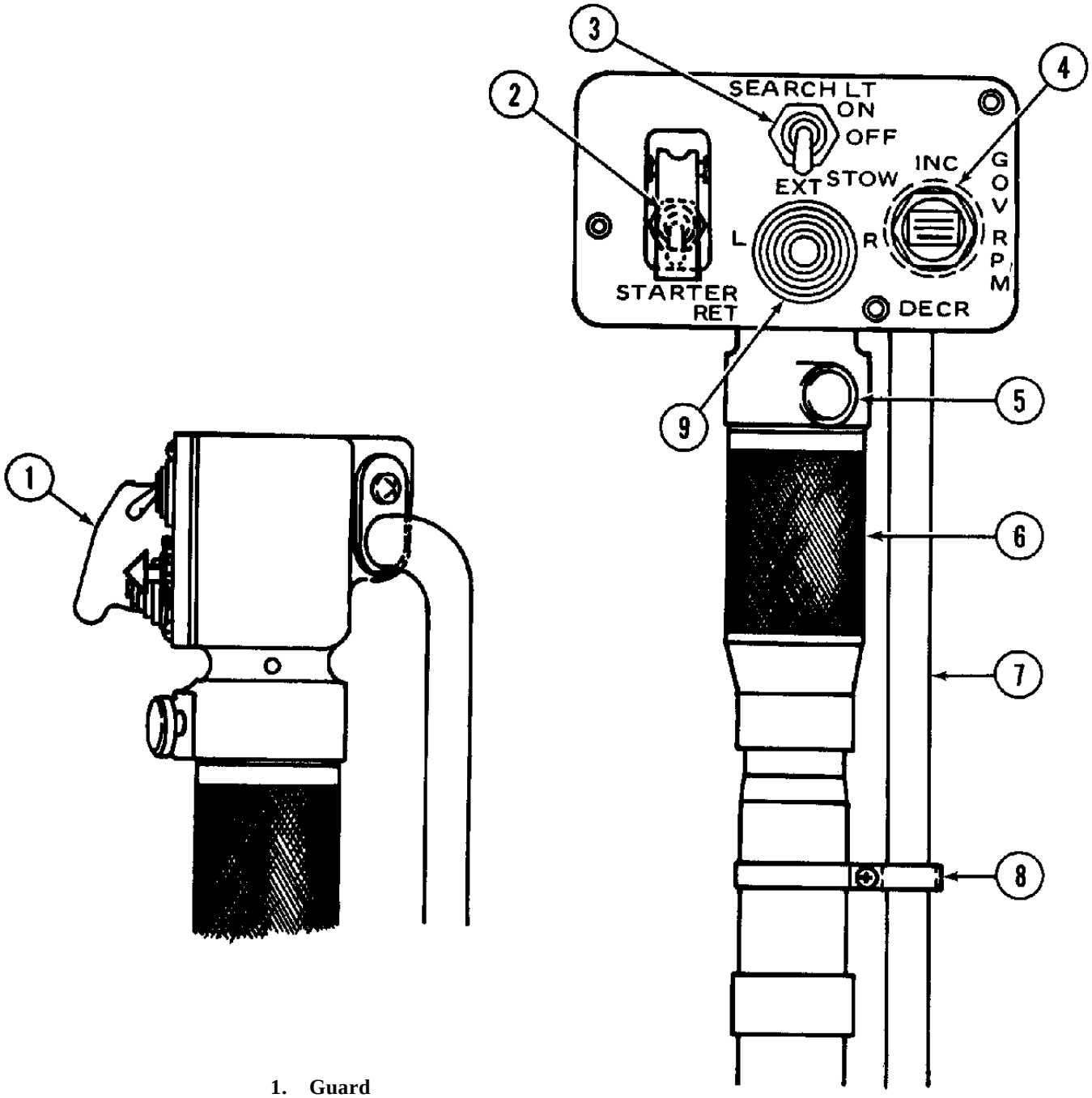

1. **Guard**
2. **Starter Switch**
3. **Search Light Switch**
4. **Governor Switch**
5. **Engine Idle Release Control**
6. **Throttle**
7. **Conduit**
8. **Clamp**
9. **Search Light Control Switch**

Figure 67-2. Collective Stick

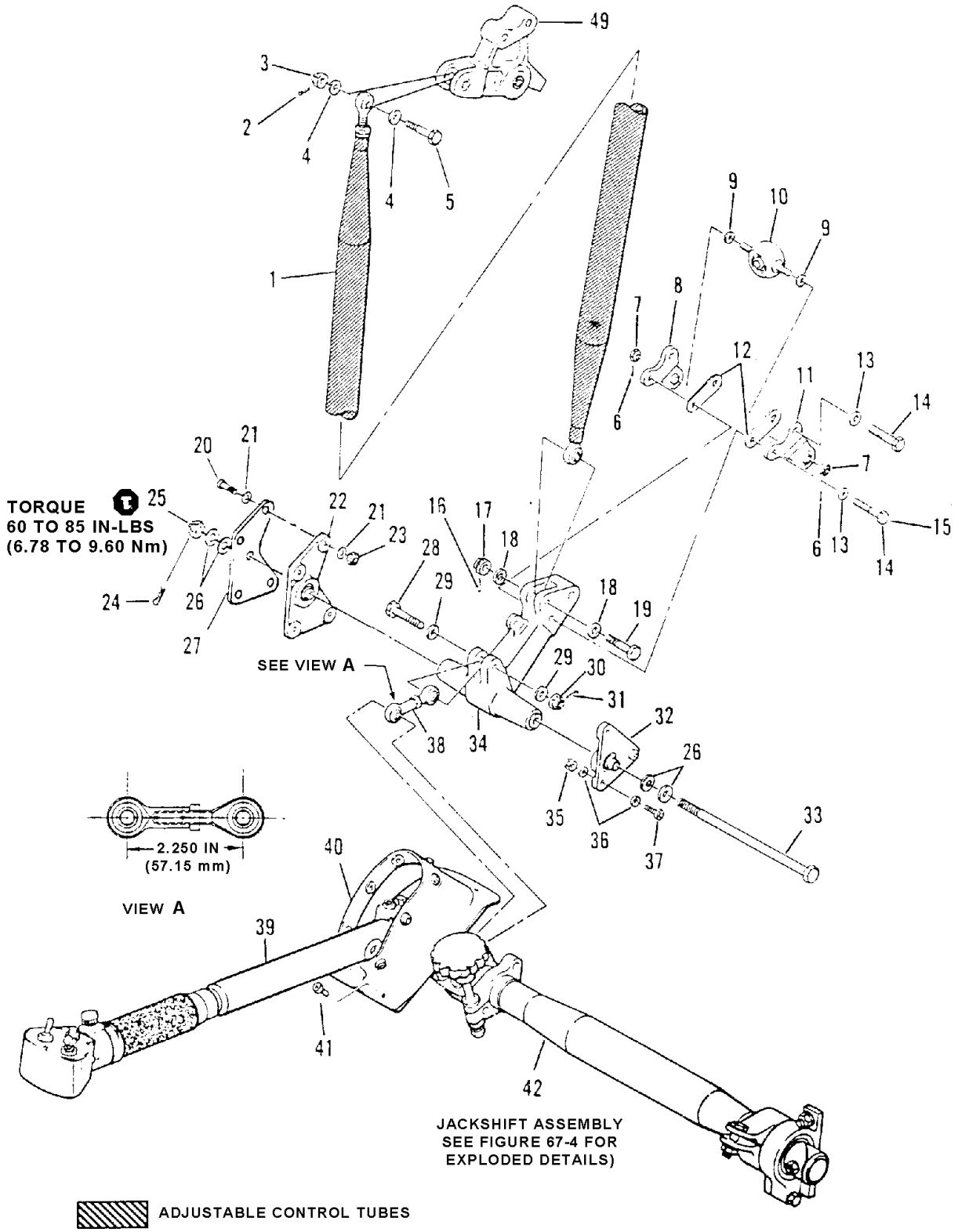

Figure 67-3. Collective Control Rigging (Sheet 1 of 3)

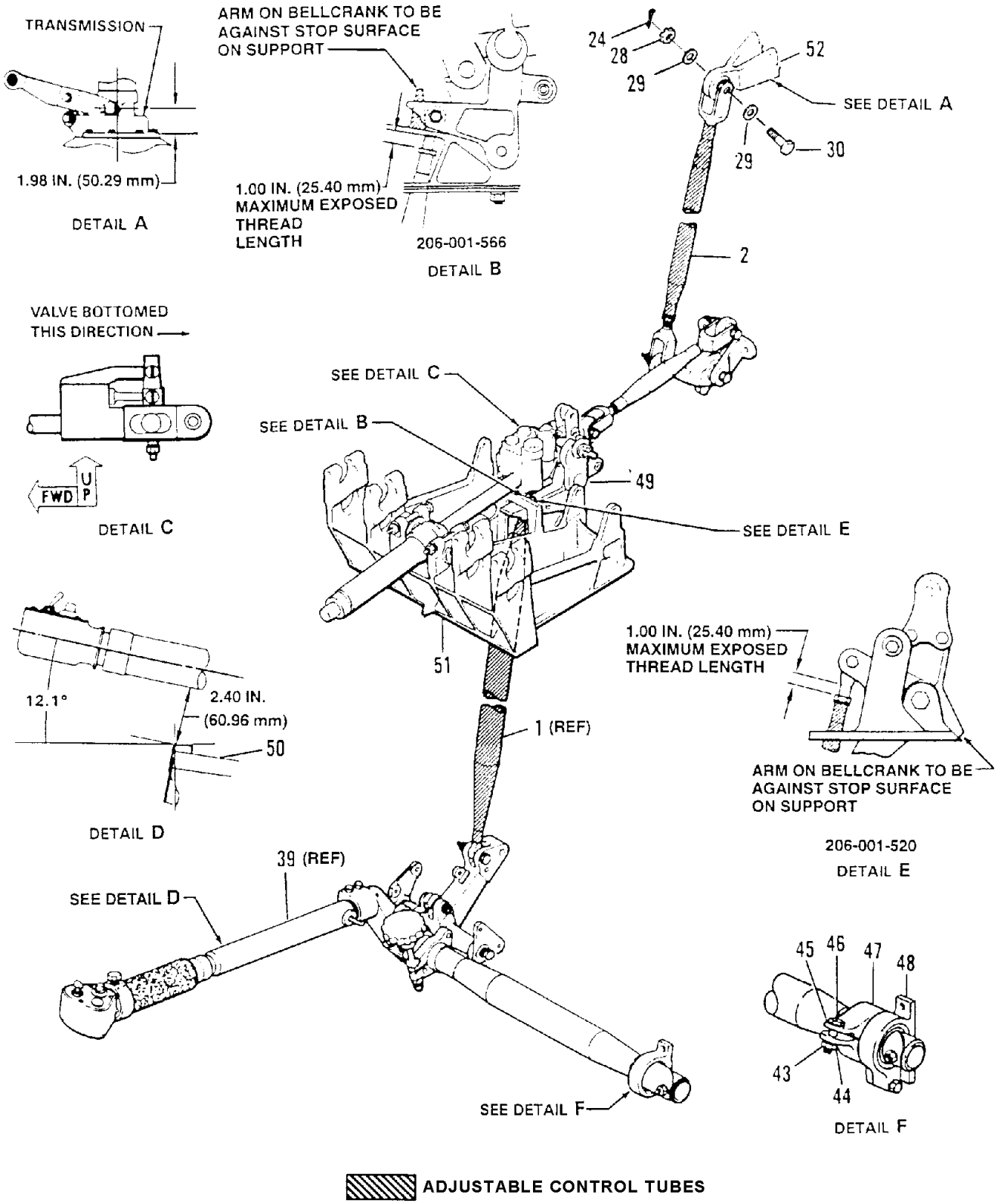

Figure 67-3. Collective Control Rigging (Sheet 2 of 3)

1. Control tube
2. Cotter pin
3. Nut
4. Washer
5. Bolt
6. Cotter pin
7. Nut
8. Plate assembly
9. Washer
10. Trunnion bearing
11. Plate assembly
12. Shim
13. Washer
14. Bolt
15. Lockwire
16. Cotter pin
17. Nut
18. Washer
19. Bolt
20. Bolt
21. Washer
22. Support assembly
23. Nut
24. Cotter pin
25. Nut
26. Washer
27. Shim
28. Bolt
29. Washer
30. Nut
31. Cotter pin
32. Support assembly
33. Bolt
34. Lever assembly
35. Nut
36. Washer
37. Screw
38. Link assembly
39. Pilot collective stick
40. Cover
41. Screw
42. Jackshaft assembly
43. Nut
44. Washer
45. Washer
46. Bolt
47. Clamp assembly
48. Support assembly
49. Bellcrank
50. Seat
51. Cylinder support assembly
52. Collective lever assembly

Figure 67-3. Collective Control Rigging (Sheet 3 of 3)

CAUTION!

ENSURE AN5 RIGGING BOLT INSTALLED IN STEP 3. IS REMOVED.

14. Check rigging of droop compensator controls (BHT-206-A/B-SERIES-MM-1 Chapter 76).

67-4. COLLECTIVE FRICTION ADJUSTMENT.

1. Remove pilot and copilot seats to expose collective control friction mechanism located at pilot seat and clamp assembly located below copilot seat.

2. Inspect left outboard end of jackshaft assembly (1, Figure 67-4) for the following:
   a. Jackshaft assembly (1) and support (2) and clamp assembly (3). Collective friction adjustment for this configuration shall be accomplished in accordance with step 4.

CAUTION!

DO NOT ALLOW GREASE TO CONTACT BEARING FRICTION SURFACE.

4. Accomplish friction adjustment with hydraulic boost off as follows:

   a. Secure pilot cyclic stick in neutral position.

   b. Completely relieve pilot collective friction adjuster (5) and minimum friction clamp assembly (3) under copilot seat.

NOTE

With hydraulic boost off, there is approximately 0.43 inch (10.92 mm) freeplay in the pilot collective stick that can be related to hydraulic servo actuator valve travel. Adjustment of the collective minimum friction will be accomplished within this freeplay band.

   c. Pull pilot collective stick up 1.0 to 2.0 inches (25.40 to 50.80 mm) from low collective rigged position.

   d. Adjust nut (10) on clamp assembly (3) until a breakout force of 3 to 5 pounds (13.34 to 22.24 N) is measured at center of the throttle grip on the pilot collective stick.

5. Install seats and any additional covers that were removed.

67-5. CYCLIC CONTROL SYSTEM.

The cyclic stick utilizes a linkage system to transmit movement to a swashplate, which actuates the rotating controls of the main rotor to control helicopter attitude and direction. Fore-aft and lateral control movements are taken from the cyclic control sticks to a yoke and intermixing bellcrank. From the mixing lever of the bellcrank, the control tube/ actuator assemblies work in unison with each other in movements of pitch and in opposition to each other in movements of roll. The control tube actuator assemblies provide two functions, one as push-pull control tubes in the cyclic control system and as series electro-mechanical linear actuators in the MINISTAB flight control system (FCS). The movements of the control tube actuators are connected to hydraulic servo actuators which reduce the feed effort required to work the cyclic controls and reduce feed back forces of the main rotor through the swashplate.

NOTE

For electrical operation of both damper units and control tube actuator assemblies, refer to chapter 22, Auto-Flight System.

67-6. REMOVAL–CYCLIC CONTROL STICK

NOTE

Removal procedures for pilots and copilots cyclic control sticks are almost identical.

1. Remove pilots (or copilots) seat panel and cushion.
2. Remove screws (3, Figure 67-5) attaching boot (4) and remove boot.
3. Disconnect electrical cables at connectors.
4. On pilots stick remove two bolts (5) on lever (6). On copilots stick uncouple collar nut attaching stick to lever assembly (39).
5. Pull stick(s) out of lever(s) and work electrical wires down through slot in lever.

67-7. INSTALLATION – CYCLIC CONTROL STICK.

NOTE

Installation procedures for pilots and copilots cyclic stick are almost identical.

1. Insert control stick(s) (2, Figure 67-5) in lever assemblies (6 and 39).
2. Secure pilots stick with two bolts (5). Secure copilots stick using collar nut.
3. Connect electrical cables.
4. Install boot (4) with screws (3).
5. Replace seat panel(s) and cushion(s).

67-8. CYCLIC STICK GRIP.

The cyclic stick grip incorporates four switches. One switch is located on the front of the grip and operates the ICS and radios. The first detent operates ICS, and second detent operates the radios. Another switch is located on the top left side of the grip and operates the force trim release. Depressing the FCS OFF switch when the automatic flight control is engaged, will disengage the system. When a cargo hook and associated system is installed, depressing the CARGO RELEASE button opens the cargo hook. (See Figure 67-9.)

67-9. ADJUSTMENT – CYCLIC FRICTION.

NOTE

Temperature, humidity, usage and bearing friction adjustment knob tightened for an extended period will cause friction setting to change.

1. Remove pilots seat cushion and seat support.
2. Apply hydraulic pressure to control system, using auxiliary hydraulic power unit.
3. Position cyclic stick assembly (2, Figure 67-5) in neutral position and using a spring scale check

For a breakaway force of 1.5 +/- 0.5 pounds, measured at center of grip.

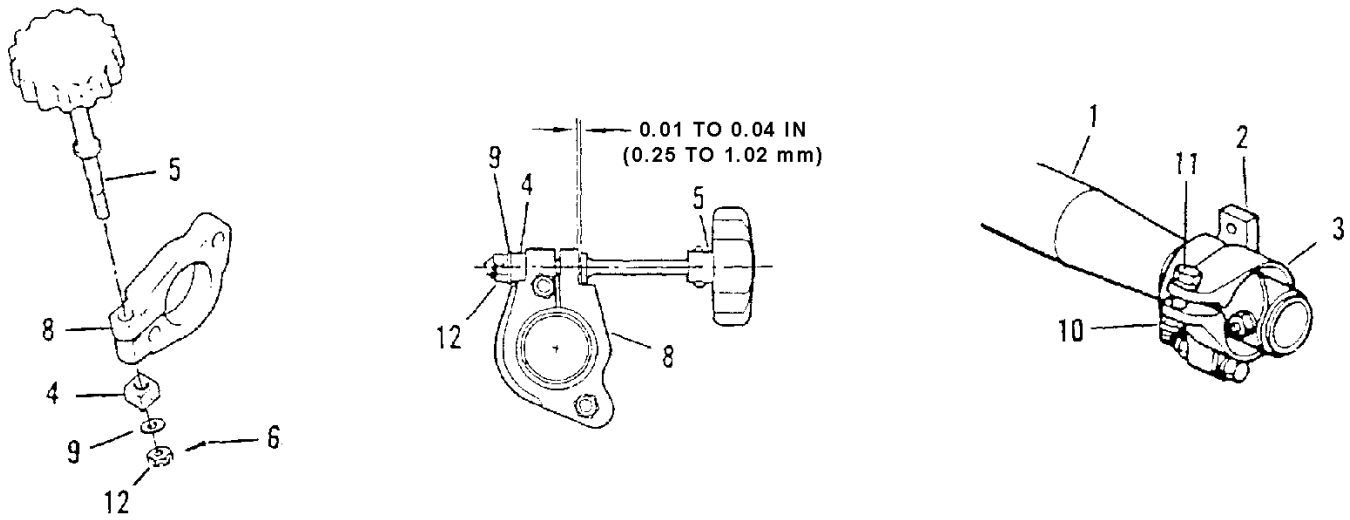

1. **Jachshaft Assembly**
2. **Support**
3. **Clamp Assembly**
4. **Square Nut**
5. **Friction Adjuster**
6. **Cotter Pin**
7. **Locknut**
8. **Bearing**
9. **Washer**
10. **Nut**
11. **Bolt**
12. **Nut**

Figure 67-4. Collective Friction Adjustment

4. If adjustment is required, remove cotter pin (42), nut (43), aluminum washer (44), barrel nut (45 and 46), knob (47), and shaft (48) from pivot support (41). Reassemble and adjust as follows:

   a. Hold large and small barrel nuts (46 and 45) to slots on pivot support (41). Insert knob and shaft through large barrel nut, until large threads on knob and shaft contact the large barrel nut, then back the knob and shat out of the small barrel nut 1-1/2 complete turns. Position and hold large barrel nut against the large threads of the knob and shaft, then thread the knob and shaft on large barrel nut until it is pulled into contact with pivot support slot.

   b. Accomplish step a, tightening knob and shaft into barrel nuts and pivot support, until required breakaway force is obtained.

   c. Hold knob and shaft stationary and install aluminum washers (44) (8 maximum), as required, nut (43), and cotter pin (42). Recheck breakaway force. With knob and shaft loosened, minimum breakaway force of 1 to 2 pounds must be maintained.

NOTE

Recheck cyclic friction on ground runup. If friction is not within 1 to 2 pounds, adjust friction again per steps above.

WARNING

CYCLIC FRICTION ABOVE 2 POUNDS CAN BE DETRIMENTAL TO THE OPERATION OF THE MICROSWITCH IN THE MINISTAB FORCE TRIM UNITS. WHEN THE STICK IS MOVED AGAINST THE FORCE GRADIENT SPRING EXCESSIVE FRICTION COULD PREVENT THE STICK FROM RETURNUNG TO THE CORRECT POSITION THEREBY INHIBITING THE ATTITUDE RETENTION FUNCTION.

67-10. CYCLIC CONTROL LINKAGE.

Linkage between the cyclic control stick and swashplate control horns includes control tubes, control tube actuators, bellcranks, jackshaft, and hydraulic servo actuators.

67-11. REMOVAL–CYCLIC CONTROL LINKAGE.

1. Parts of the control system can be removed separately as need occurs, or completely in practical sequence. (Refer to Figure 67-5.) Take precautions against damage by accidental movement of linkage while disconnected.

2. Remove seats and panels to gain access to forward section of controls.

3. Open vertical panel on aft side of center of support column for access to control tubes and bellcranks.

4. Remove control rods, control tube actuators, and bellcranks as necessary for replacement as required. Do not change length of any adjustable tubes. System will require rigging if any tube length is changed, or if tube is replaced.

67-12. INSTALLATION – CYCLIC CONTROL LINKAGE.

1. Install right pivot support (41, Figure 67-5) and lever (6) as follows.

   a. Apply tape (C-455) to faying surfaces of helicopter structure and base of right pivot support.

   b. Install right pivot support to structure with drilled flange for knob (47) and shaft (48) pointing inboard on the helicopter. Secure right pivot support to cabin floor with four bolts (52) and washers (51). Torque bolts (52) 40 to 50 inch-pounds.

2. Install lever (6) and lever (53) as follows:

   a. Install bearing (54) on lever (53).

   b. Position retainer (50) over bearing (54) and thread lever (53) into lever assembly (6). Torque lever 1100 to 1300 inch-pounds. Align drilled holes in levers and install MS20470AD4 rivet (7).

WARNING

CLEANING SOLVENT IS FLAMMABLE AND ITS FUMES ARE TOXIC.

c. Clean bearing bore pivot support (41) thoroughly with MPK (C-309) to remove oil, paint, and prime.

d. Spray a coat of dry lubricant (C-028) into bearing bore from a distance of approximately four inches. Protect surrounding area from overspray.

e. Allow lubricant to dry thoroughly, then lightly buff surface with a soft, clean cloth to improve lubricity.

f. Position bearing (54) into right pivot support (41) with split in outer race of bearing (54) and retainer (50) aligned with split in pivot support.

g. Install three screws (49) to secure bearing (54) and retainer (50).

3. Hold large and small barrel nuts (46 and 45) against slots in right pivot support (41). Thread knob (47) and shaft (48) through large barrel nut, pivot support and small barrel nut until large threads on knob and shaft contact large barrel nut. Hold large barrel nut approximately 0.030 inch from pivot support and thread knob and shaft into large barrel nut until it is pulled into contact with pivot support. Install aluminum washer (44) and nut (43) loosely.

NOTE

Adjust cyclic friction after completing cyclic controls installation. (Refer to paragraph 67-9).

4. Install lever assembly (39) and left pivot support (38) as follows:

a. Apply tape (C-455) to faying surfaces of helicopter structure and base of left pivot support (38).

b. Align holes in left pivot support with holes on cabin floor. Install four bolts (36) and washers (37). Torque bolts (36) 40 to 50 inch-pounds.

c. Install lever assembly (39) into left pivot support (38).

d. Install bolt (31), washers (32, 33) and nut (34). Torque nut (34) and secure with cotter pin (35).

5. Install torque tube (40) between lever assembly (6) and lever assembly (39). Connect tube to lever (6) using bolt (18) washers (19, 20) and nut (21). Torque nut (21) and secure with cotter pin (22).

6. Connect torque tube (40) to lever (39) using bolt (23) washers (24, 25)control rod (26) washer (27, 28) and nut (29). Torque nut (29) and secure with cotter pin (30).

7. Install yoke assembly (67,68) as follows:

a. Install right side of yoke (68) on lever assembly (6) and install bolt (8), washers (9, 10), spacer (11), washer (12), control rod (17), washers (13,14) and nut (15). Torque nut (15) and install cotter pin (16).

b. Install left side of yoke assembly (67) on lever assembly (39), and install eyebolt (60), washers (61, 62), and nut (63). Torque nut (63) and secure with cotter pin (64).

c. Align left and right sides of yoke assembly. Install bolts, washers, and nuts (65 and 66) through assembly and torque nuts.

8. Assemble and install mixing lever (74) as follows:

NOTE

The rotational force may be measured by inserting bolts (85) and (94) through each clevis (86) and bearing (82) and using a spring scale to determine force.

a. Install clevis (86) and thrust washer (73) on ear of mixing lever (74). Install washer (72), shims (71), and nut (70). Add or subtract shims (71) and torque nut (70) to provide a 0.002 inch gap between mixing lever (74) and washer (72), so that the force required to rotate clevis (86) in bushing (95) is 18 inch-ounces maximum. (Refer to Figure 67-8, detail A). Secure with cotter pin (69).

b. Repeat step a. for bearing (82), washer (81), washer (72), shims (71), nut (80), cotter pin (79), and bushing (95).

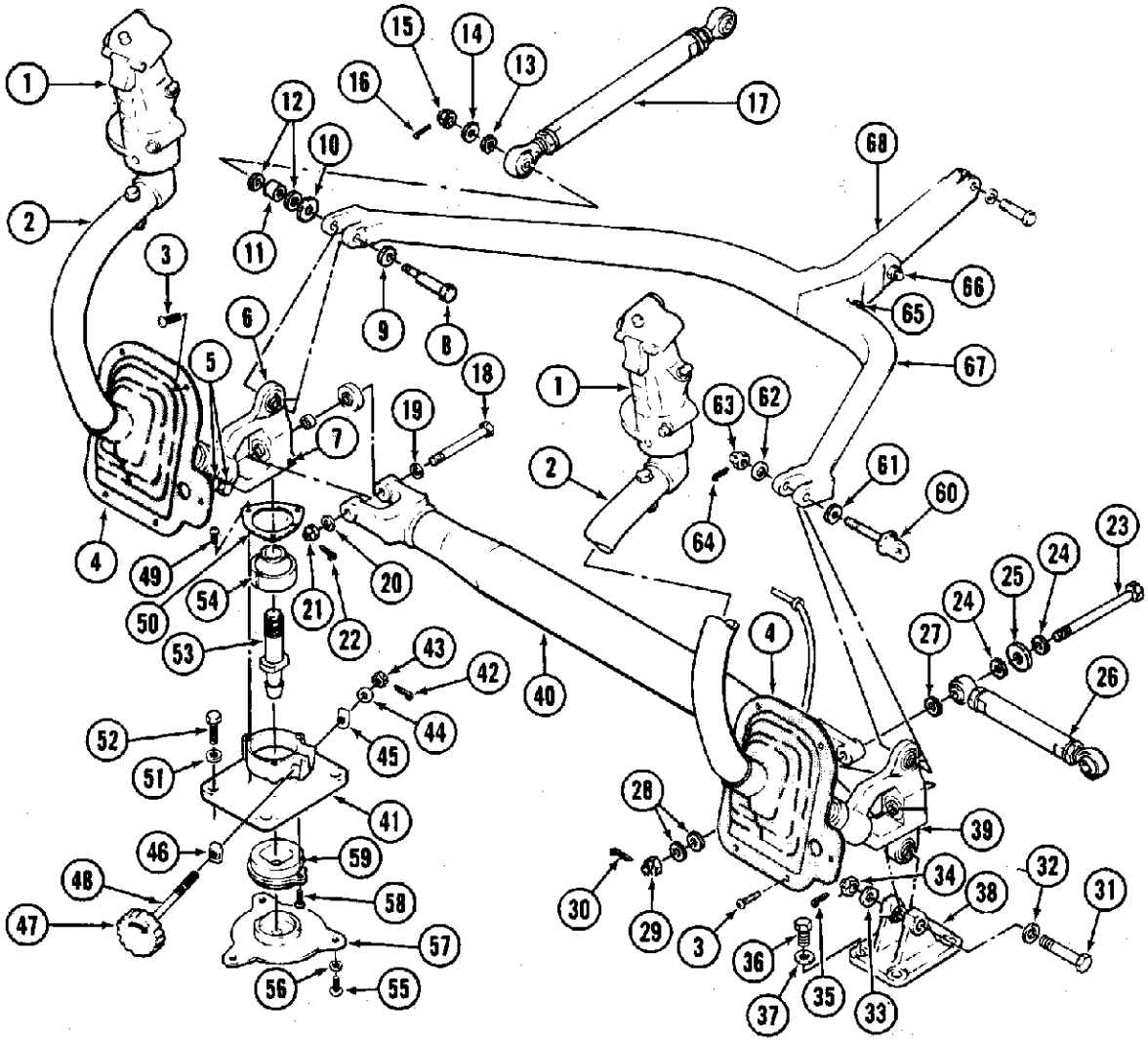

1. Grip
2. Stick
3. Screw
4. Boot
5. Bolt, Aluminum Washers, and Nut
6. Lever
7. Rivet
8. Bolt
9. Washer
10. Washer
11. Spacer
12. Washers
13. Washer
14. Washer, large O.D.
15. Nut
16. Cotter Pin
17. Control Rod
18. Bolt
19. Washer
20. Washer
21. Nut
22. Cotter Pin
23. Bolt
24. Washers
25. Washer, large O.D.
26. Control Rod
27. Washer
28. Washers
29. Nut
30. Cotter Pin
31. Bolt
32. Washer
33. Washer
34. Nut
35. Cotter Pin
36. Bolt
37. Washer
38. Pivot Support
39. Lever Assembly
40. Torque Tube
41. Pivot Support
42. Cotter Pin
43. Nut
44. Aluminum Washer
45. Barrel Nut
46. Barrel Nut
47. Knob
48. Shaft
49. Screw
50. Retainer
51. Washer
52. Bolt
53. Lever
54. Bearing
55. Screw
56. Washer
57. Cover
58. Screw
59. Sleeve
60. Eyebolt
61. Washer
62. Washer
63. Nut
64. Cotter Pin
65. Bolt, Washers, and Nut
66. Bolt, Washers, and Nut
67. Yoke-half
68. Yoke-half

Figure 67-5. Cyclic Control System (Sheet 1 of 3).

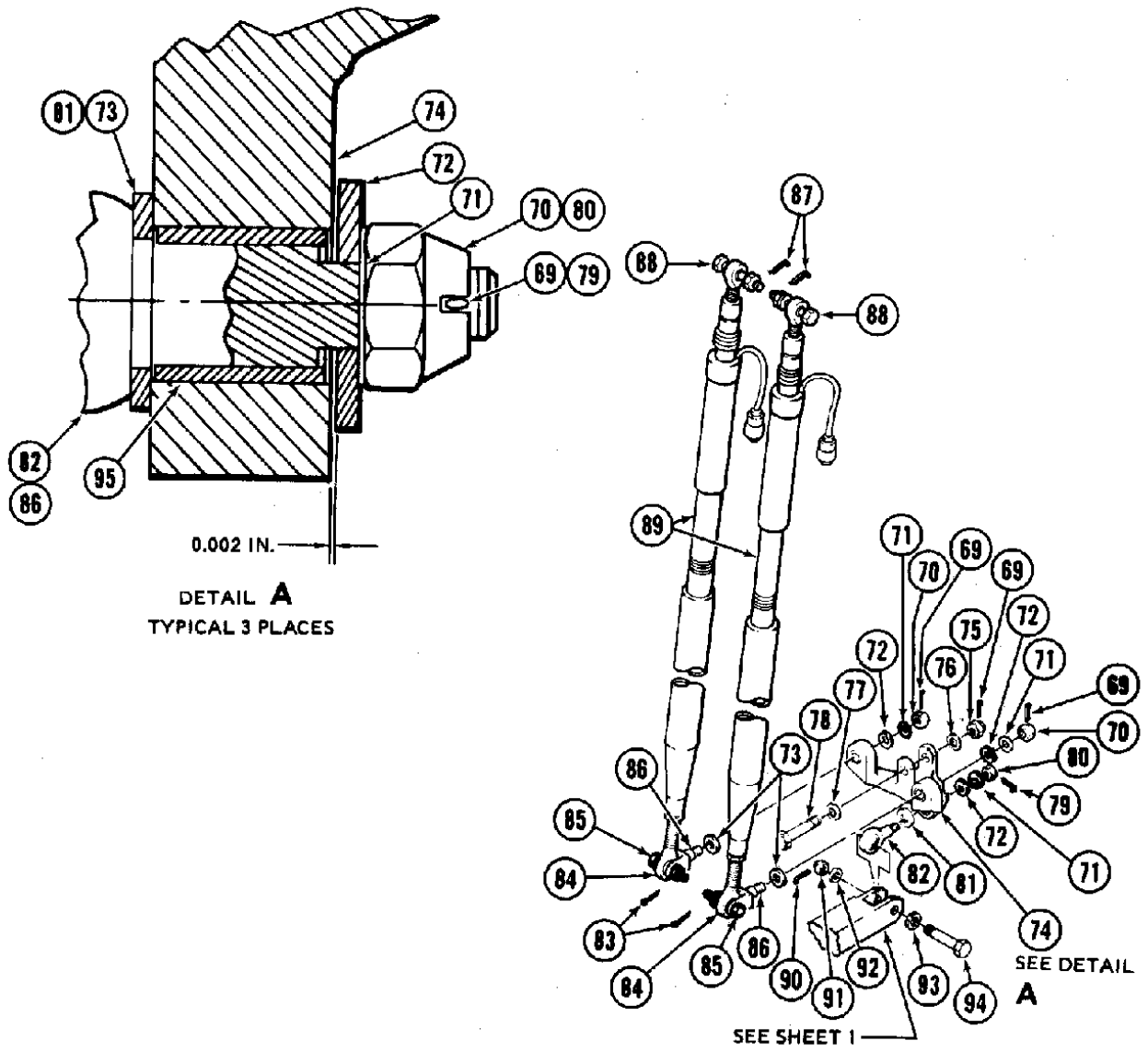

69.	Cotter Pin	78.	Bolt	87.	Cotter Pins
70.	Nut	79.	Cotter Pin	88.	Bolt, Washers, and Nut
71.	Shim	80.	Nut	89.	Control Tube Actuator
72.	Washer	81.	Washer	90.	Cotter Pin
73.	Thrust Washer	82.	Bearing	91.	Nut
74.	Mixing Lever	83.	Cotter Pin	92.	Washer
75.	Nut	84.	Rod-end	93.	Washer
76.	Washer	85.	Bolt, Washers, and Nut	94.	Bolt
77.	Washer	86.	Clevis	95.	Bushing

Figure 67-5. Cyclic Control System (Sheet 2 of 3).

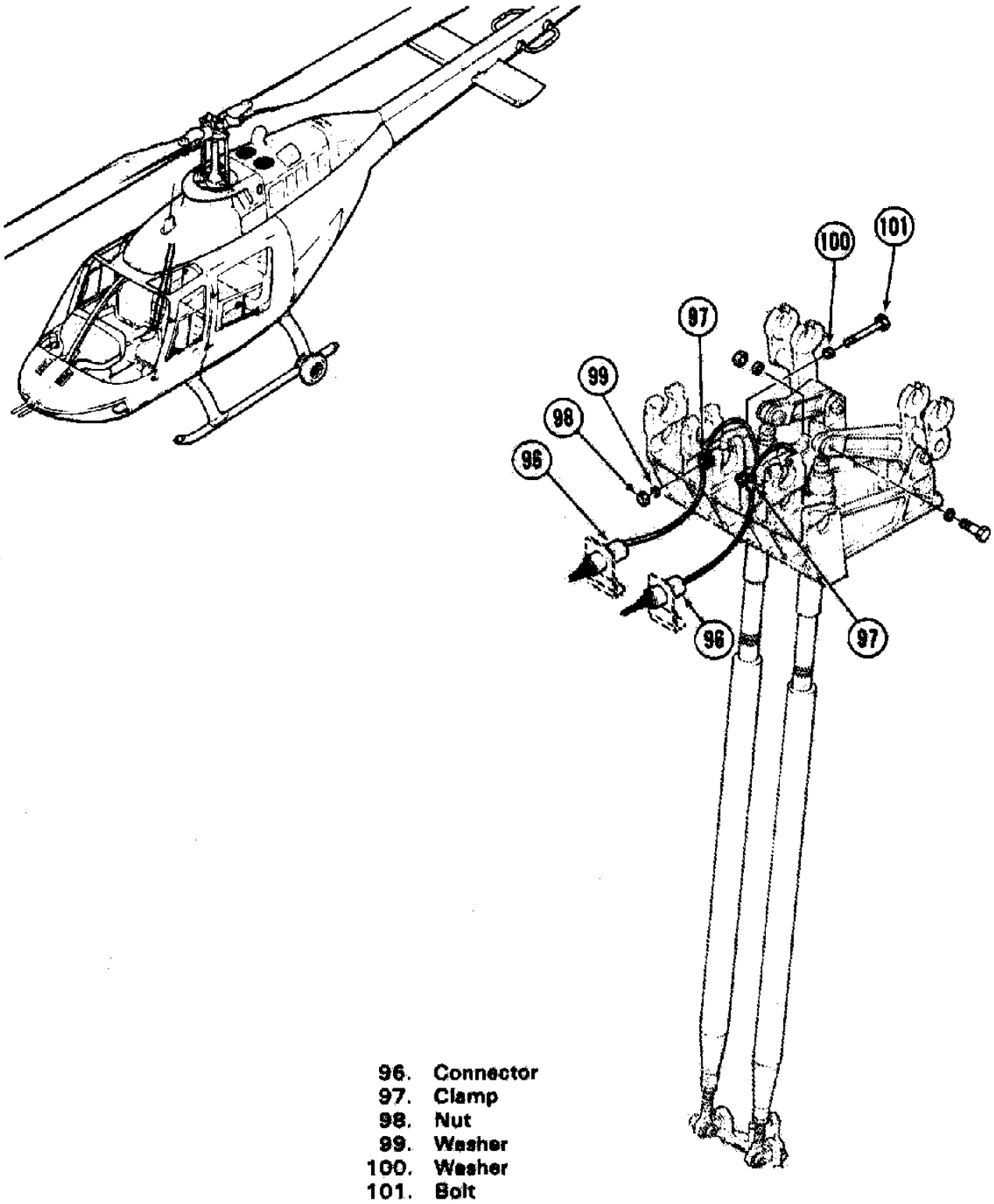

Figure 67-5. Cyclic Control System (Sheet 3 of 3).

c. Repeat step a. for clevis (86), thrust washer (73), thrust washer (72), shims (71), nut (70), cotter pin (69) and bushing (95).

d. Position mixing lever assembly to collective pitch lever assembly. Install bolt (78), washers (77, 76), and nut (75). Apply standard torque and secure with cotter pin (69).

e. Align yoke assembly and bearing (82). Install bolt (94), washers (93, 92), and nut (91). Apply standard torque and secure with cotter pin (90).

f. Install control tube actuator assemblies (89) with wire aft and positioned in clevis portion of bellcrank. (Refer to Figure 67-3, View F.) (Refer to paragraph 67-18.)

9. Adjust minimum cyclic friction. (Refer to paragraph 67-9.)

10. Rig cyclic pitch control system. (Refer to paragraph 67-18.)

67-13. CONTROL TUBE ACTUATOR ASSEMBLIES.

The control tube actuator assemblies are electromechanical devices installed in the cyclic control system between the mixing lever and the left and right hydraulic servo bellcranks. The tube actuators act as ordinary push-pull tubes in the control system, however, while the MINISTAB flight control system is operating, they also act as linear actuators responding to signals originating in the pitch and roll computers.

Each actuator assembly comprises a fixed length hollow tube connected at one end to a dc motor and jackscrew assembly. The permanent magnet dc motor, when excited, drives the jackscrew to either extend or shorten the length of the assembly. These actions are transmitted to the hydraulic servos, to correct the deviation in attitude detected “earlier” in the computers. The tube actuators work either in the same direction (pitch corrections) or in balanced, but opposite, directions (roll corrections).

Access to the actuators is through the door covering the aft side of the center-structure column.

The control tube actuator assemblies are interchangeable, therefore, prior to disconnecting the actuator electrical connectors ensure that the right hand actuator electrical connector and support bracket is legibly color coded with orange markings. If the cannon plug has not been previously color coded, proceed with the following steps:

a. Clean and prepare the knurled portion of the male half of the cannon plug and the support bracket for painting I/A/W NAVAIR 01-1A-509.

b. Paint cannon plug support bracket and knurled area of cannon plug orange. Allow adequate drying time.

67-14. REMOVAL – CONTROL TUBE ACTUATOR ASSEMBLY.

1. Remove forward roof fairing and vertical door on center support column.

2. Ensure the right hand actuator electrical connector is clearly marked with orange color coding. Disconnect actuator electrical connector (96, Figure 67-5).

3. Remove nut (98), washers (99, 100), bolt (101), and clamp (97) securing connector lead to structure.

4. Disconnect control tube actuator (89) by removing cotter pin (87), nut, washers and bolt (88).

NOTE

It is recommended two personnel be utilized during steps 5 and 6.

5. Disconnect control tube actuator assembly at lower end by removing cotter pin (83), nut, washers and bolt (85).

CAUTION!

ENSURE THERE IS NO CONTACT WITH STRUCTURE OR OTHER CONTROL RODS TO AVOID DAMAGE TO EQUIPMENT.

6. Remove control tube actuator assembly upward through cabin roof.

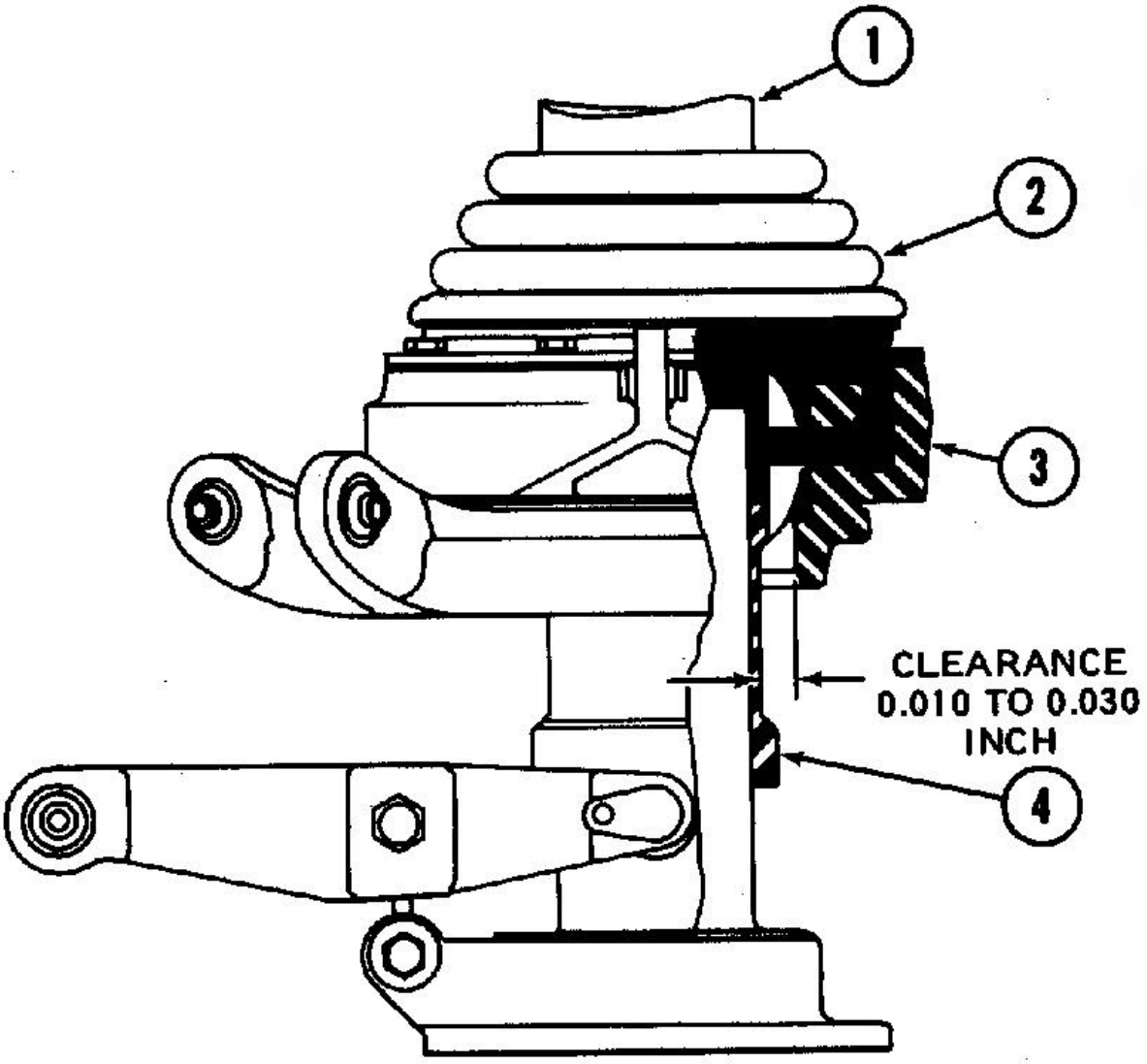

1. **Rotor Mast**
2. **Protective Boot**
3. **Inner Ring**
4. **Pivot Sleeve**

Figure 67-6. Inner Ring / Pivot Sleeve

NOTE

If control rod actuator assembly is not being replaced, omit the following step. Otherwise, proceed to step 7.

7. Remove upper rod end fitting and jamnut from actuator and retain for installation on new control rod actuator assembly.

67-15. INSPECTION – CONROL TUBE ACTUATOR ASSEMBLY.

1. Inspect control tube actuator assemblies for electrical, mechanical and corrosion damage, and joint wear. Control tube actuator assemblies damaged in excess of the following limits shall be replaced.

   a. Clean control tube actuator assemblies with cloth moistened in solvent (C-304). Do not allow solvent to enter bearings.

   b. Polish out acceptable damage; removing no more material than necessary, to blend repair smoothly into surrounding surface. Mechanical damage shall be polished out only deep enough to remove traces of damage or wear. Corrosion damage should be polished out to twice the depth of the deepest pit, provided the maximum limit is not exceeded.

      (1) Use No. 400 to No. 600 grit abrasive cloth or paper (C-423) to remove damage or wear to a scratch free surface. Do not attempt any repairs by using a grinding wheel.

      (2) Apply chemical film treatment (C-100) to repaired and bare areas and a protective coating of primer (C-204).

   c. No thread or surface damage is acceptable if repair will interfere with thread engagement.

   d. Inspect rod bearings for axial and radial wear. If wear in either direction exceeds the wear limits specified in BHT-All-SPM, the rod end shall be replaced.

2. Inspect actuator for damage to housing, cracked boot, electrical cable damage, and security of attachment on threaded end of control tube. If damage other than surface wear or corrosion exists, the control tube actuator assembly shall be replaced.

67-16. REPAIR – CONTROL TUBE ACTUATOR ASSEMBLY.

1. Replace control tube actuator assemblies which have dented, cracked or distorted control tube.

2. Refer to paragraph 67-18 for damage limits for actuator.

67-17. INSTALLATION – CONTROL TUBE ACTUATOR ASSEMBLY.

NOTE

If control tube actuator assembly is being replaced, perform steps 1 and 2. Otherwise, proceed to step 3.

1. If required, install lower rod end fitting with jamnut in the tube section of assembly, adjusting the fitting until a nominal dimension of 1.500 to 1.700 inch is obtained between end of tube and center of bearing. (See Figure 67-5). Torque jamnut to 80 to 100 in-lbs.

2. If required, install upper rod end fitting in actuator end of assembly with no more than one inch of thread-area exposed. Leave jamnut loose until rigging is complete.

CAUTION!

ENSURE THAT CONTROL ROD ACTUATOR ASSEMBLY DOES NOT CONTACT STRUCTURE OR OTHER CONTROL RODS TO AVOID DAMAGE TO EQUIPMENT.

NOTE

It is recommended that two personnel be utilized during steps 3 and 4.

3. Lower control tube actuator assembly (89) through roof. Align actuator so that electrical lead faces forward. (Refer to Figure 67-5, view F.)

4. This Instructional paragraph applies to both left and right actuators. Connect the lower rod end (84, Figure 67-5) to mixing lever (74) using bolt,

washers, and nut (85)ensuring the bolt is installed bolt head outboard. Torque nut 30 to 40 in-lbs. Install cotter pin (83). Torque rod end jam nut to 80 to 100 in-lbs.

5. Connect actuator electrical connector (96) to the appropriate roof mounted electrical connector. Ensure the orange color coded electrical connector is connected to the right hand actuator.

CAUTION!

PRIOR TO TIGHTENING CLAMP (97), ADJUST CONNECTOR LEAD, FOR A 7.5 INCH MEASUREMENT BETWEEN CLAMP (97) AND CONNECTOR TO AVOID DAMAGE TO CONNECTOR LEAD.

6. Secure connector lead to structure using clamp (97), bolt (101), washers (9, 100) and nut (98).

7. If control tube actuator assembly is being replaced, install spiral wrap along full length of actuator cable except under clamp (97).

8. Ensure that the actuator is in the electrical null position. (Refer to paragraph 67-20).

9. Carry out cyclic control rigging procedure. (Refer to paragraph 67-18).

67-18. RIGGING – CYCLIC CONTROLS.

NOTE

The rigging procedure which follows is to be performed if the cyclic system is thought to be out of rig, or if one, or more, components have been removed and replaced with new components or components with unadjusted lengths. The rigging procedure presupposes that all six control tubes in the system have been removed or are disconnected.

Collective controls shall be rigged prior to rigging cyclic controls. Refer to Paragraph 67-3.

1. Install cylinder extension tubes (18, Figure 67-7) with bolts, washers and nuts.

CAUTION!

ENSURE ADJUSTABLE CLEVIS-ENDS ON TUBES (2 AND 3) ARE INSTALLED ONTO BELLCRANKS (4 AND 5). ENSURE ATTACHING BOLTS ARE INSTALLED WITH HEADS FACING OUTBOARD TO PROVIDE CLEARANCE BETWEEN BOLTS AND PYLON LINKS (SEE VIEW B).

2. Connect adjustable control tubes (2 and 3) to bellcranks (4 and 5) with bolts, washers, and nuts. Leave upper ends free.

3. Center cyclic stick.

4. From underside of cabin install rigging tool (15) through cover into pilots control lever.

5. Increase cyclic stick friction using adjuster (11).

WARNING

HYDRAULIC POWER MUST BE REMOVED TO PREVENT INJURY WHILE WORKING WITH HYDRAULIC-POWERED CONTROLS.

6. Position the collective control stick to the full down position. Any movement of the collective control stick will tend to reposition cyclic controls.

7. Bottom hydraulic servo valves (See view D.)

8. Position two bellcranks (4 and 5) to a position where center line of lower bearing is 3.09 inches above cabin deck. (See view B.)

CAUTION!

MAXIMUM ALLOWABLE EXPOSED THREAD LENGTH ON ADJUSTABLE ROD END FITTINGS IS 1.0 INCH.

NOTE

If control tube actuator assembly is being replaced or reinstalled, perform the steps in paragaph 67-18, before proceeding with step 9. If control tube actuator assemblies are installed, perform the steps in paragaph 67-19, before proceeding with step 9.

9. Adjust upper rod ends of the tube actuators (7 and 8) to align with servo bellcranks. Ensure rod ends have sufficient thread engagement with actuator. Recheck bellcranks (4 and 5) to ensure measurement is still 3.09 inches above deck with adjustments of tube actuator assemblies. Connect rod ends to bellcranks using bolts, washers and nuts. Torque nuts to standard torque values. Install cotter pins. Torque rod end jamnuts to 80 to 100 in-lbs.

10. Remove and retain two sets of nuts, washers, and seals from transmission case studs (24).

11. Install rigging tools (22) on studs. Ensure rigging tools fit flush against transmission case.

NOTE

Rigging tools have threaded holes in base to fit stud threads.

12. Connect rigging tools to swashplate horns (16 and 17) using rigging bolts (25). Swashplate is now in rigging position.

13. Remove bolt (25) from right-hand rigging tool.

14. Adjust length of control tube (2) until bolt (25) passes easily through upper rod-end clevis and swashplate horn. Remove bolt (25). Secure control tube using appropriate bolt, washers and nut. Torque nut to standard torque values. Install cotter pin. Torque rod end jamnuts to 80 to 100 in-lbs.

CAUTION!

MAXIMUM ALLOWABLE EXPOSED THREAD LENGTH ON ADJUST-ABLE ROD END FITTINGS IS 1.0 INCH.

15. Repeat Step 14 to install left-hand control tube (3).

16. Remove rigging tools. Replace seals, washers, and nuts on transmission case studs.

17. Remove rigging tool (15) from cyclic stick.

NOTE

Ensure test set T-262-002 is connected in accordance with paragraph 67-20, before performing step 18.

18. Set METER INPUT SELECT switch on test set T-262-002 to EXTERNAL VOLTMETER position.

19. Apply external electrical power to the helicopter.

NOTE

It is recommended that two personnel be utilized during step 20, one at the swashplate inner ring and pivot sleeve are and one in pilot seat.

20. Remove cyclic friction.

21. Check clearance between swashplate inner ring and pivot sleeve (See Figure 67-7) with hydraulic boost ON as follows:

CAUTION!

SUBSTEPS a THROUGH e MUST BE ACCOMPLISHED IN A TIMELY MANNER TO AVOID DAMAGE TO THE COMPUTERS. DO NOT EXCEED 5 MINUTES.

NOTE

If substeps a through e cannot be completed within the specified time limits remove power from the flight control system and allow 20 minutes for system to cool down before proceeding.

a. Close FCD circuit breaker.

b. Set the LEFT toggle switch on test set to the EXTEND position.

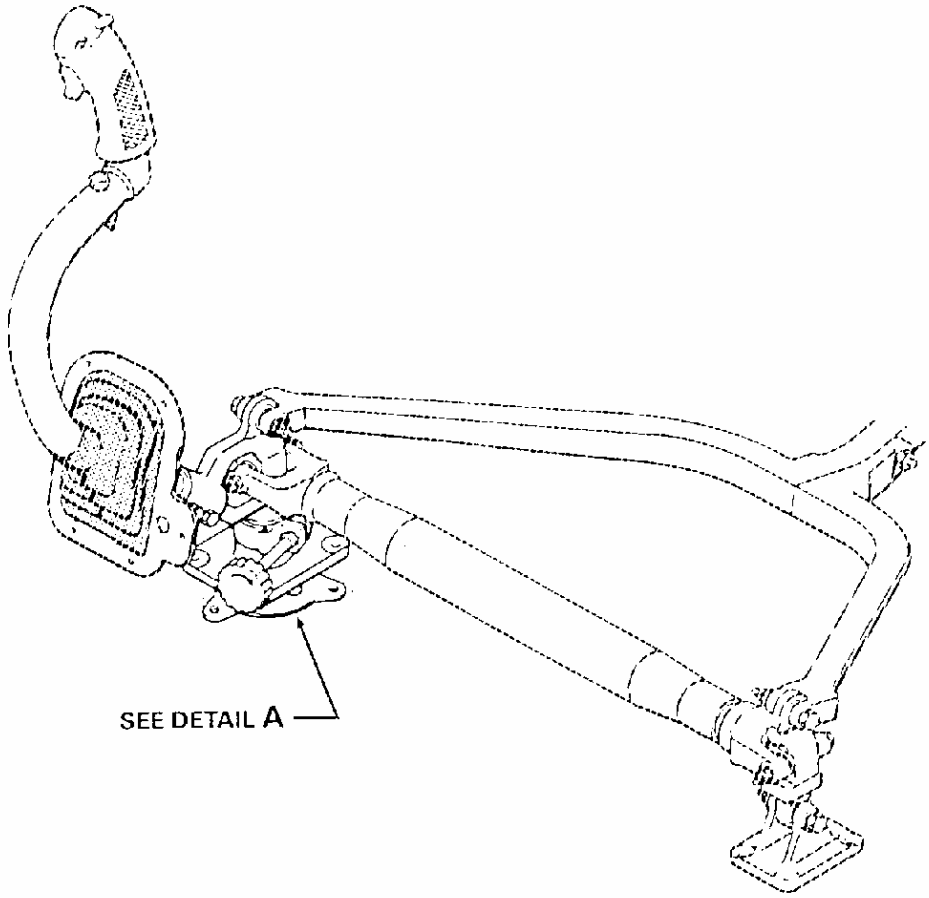

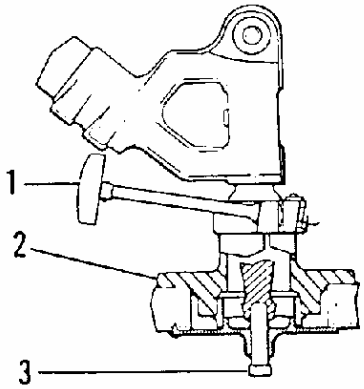

DETAIL A

1. **Cyclic Friction Adjuster**
2. **Pivot Support**
3. **AN5 Rigging Bolt**

Figure 67-7. Cyclic Control Rigging, (Sheet 1 of 4)

1. Swashplate Inner Ring
2. Control Tube
3. Control Tube
4. Bellcrank
5. Bellcrank
6. Cyclic Support
7. Control Tube Actuator
8. Control Tube Actuator
9. Yoke
10. Torque Tube
11. Cyclic Friction Adjuster
12. Cyclic Control Stick
13. Nut
14. Pivot Support
15. Rigging Tool P/N 11819-001
16. Right Horn
17. Left Horn
18. Cylinder Extension Tube
19. Trim Damper
20. Computer
21. Mixing Lever Assy

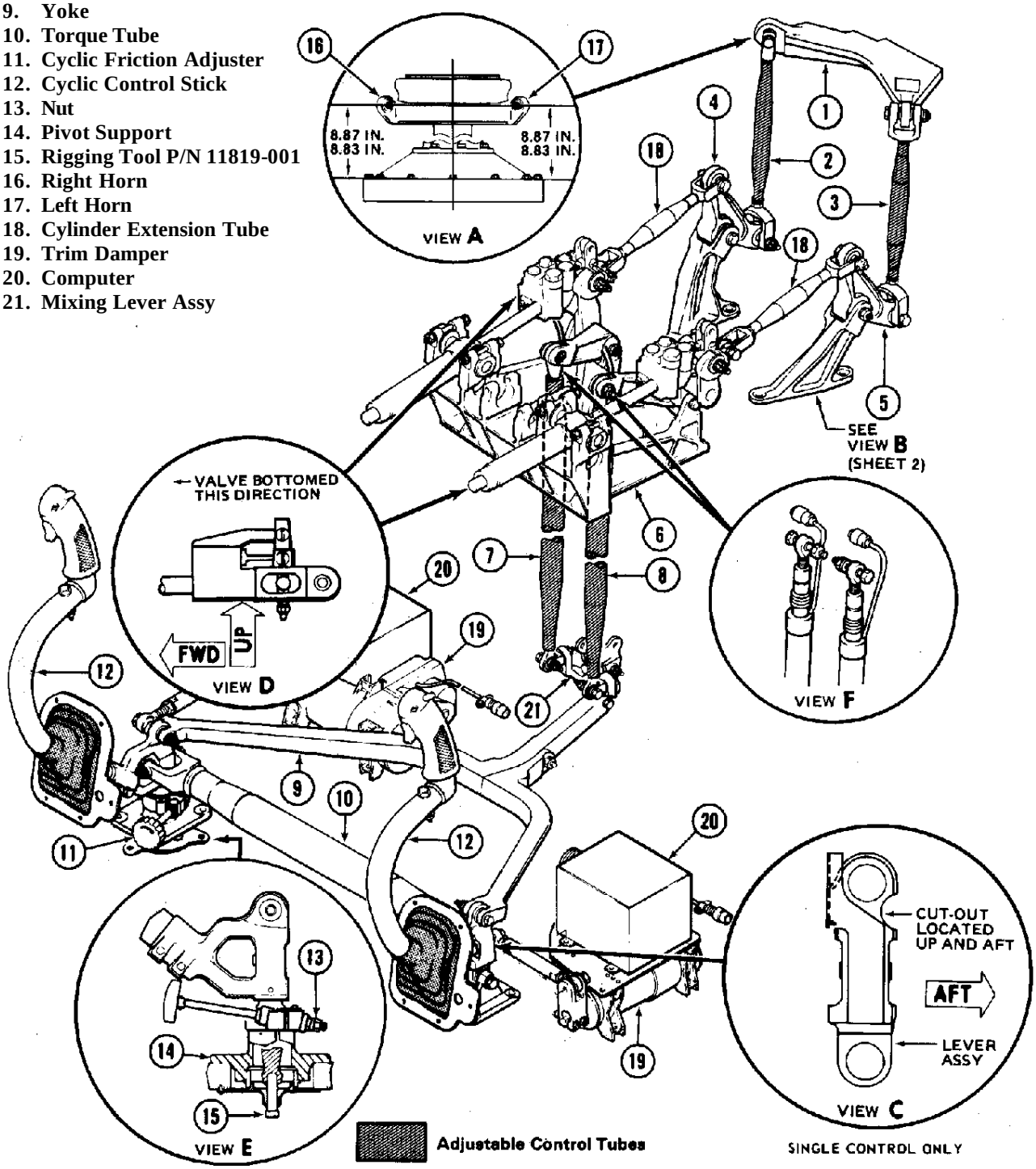

Figure 67-7. Cyclic Control Rigging (Sheet 2 of 4)

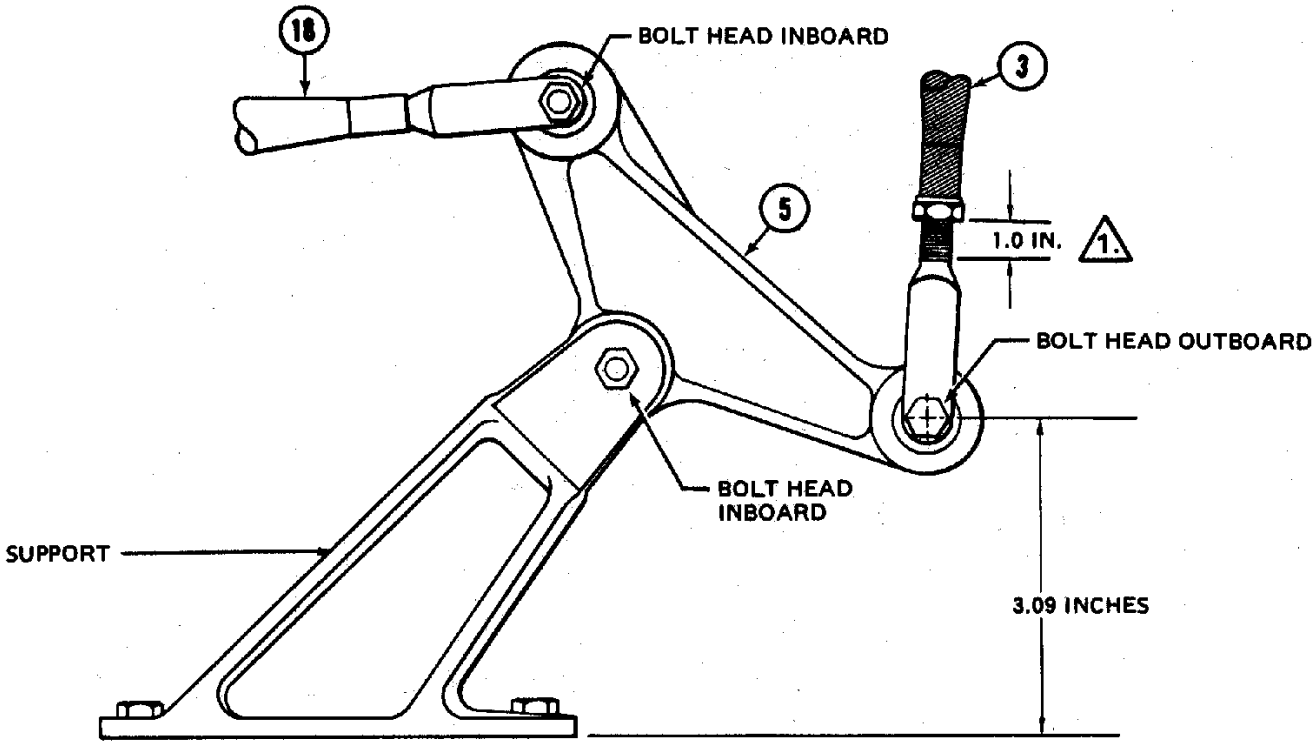

VIEW B

Adjustable Control Tube

LOOKING INBOARD FROM LEFT SIDE OF CYCLIC CONTROL BELLCRANK AND SUPPORT

Note

1. Ensure that clevis adjustment end of control tube (3) is installed onto the bellcrank (5), and that exposed threads maximum dimension does not exceed 1.0 inch.

Figure 67-7. Cyclic Control Rigging (Sheet 3 of 4)

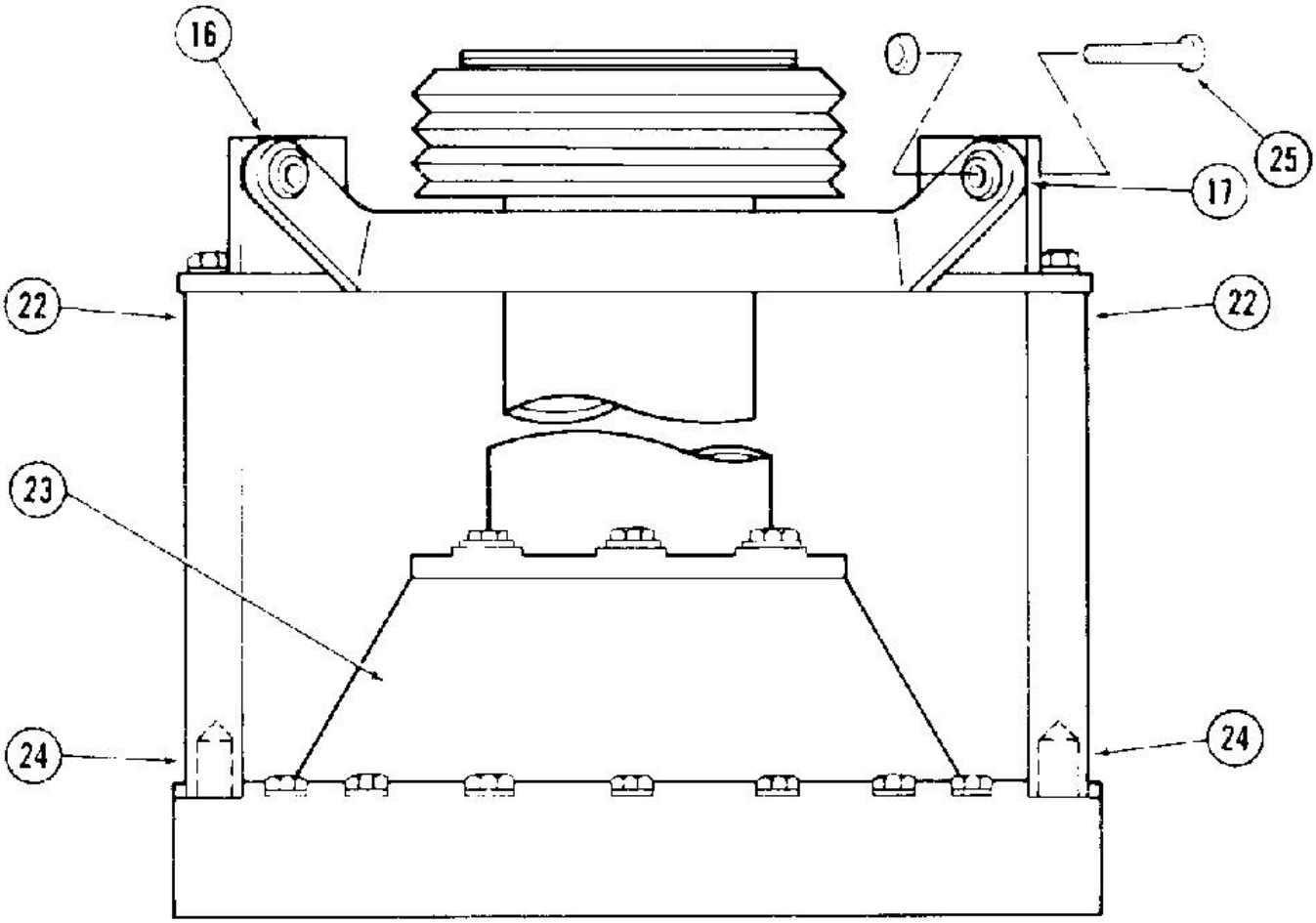

22. Rigging Tool P/N 080-10214 (2 Required)
23. Transmission
24. Studs
25. AN 5 Bolt (2 Required)

Figure 67-7. Cyclic Control Rigging (Sheet 4 of 4)

c. Move the cyclic stick to each of its four (4) extreme positions (fwd-right, fwd-left, aft-left and aft-right) while checking for clearance between swashplate inner ring and pivot sleeve. (See Figure 67-7).

d. Set the LEFT toggle switch on test set to the RETRACT position and repeat substep b.

e. Set LEFT toggle switch to NEUTRAL position.

f. Repeat steps a through d using RIGHT toggle switch on test set.

NOTE

If clearance is within limits proceed to step 24. Otherwise, proceed to step 22.

22. If contact between inner ring and pivot sleeve is noted on aft side, shorten both control tubes (2 and 3, Figure 67-7) equally to obtain 0.010 to 0.030 inch clearance when either actuator (but not both simultaneously) is retracted.

23. If contact is noted between inner ring and pivot sleeve on the forward side, lengthen both control tubes (2 and 3) equally to obtain 0.010 to 0.030 inch clearance when either actuator (but not both simultaneously) is extended or until the minimum clearance on the aft side is reduced to 0.010 inch.

24. Open FCS circuit breaker. Disconnect T-262-002 test set.

25. Disconnect external electrical power.

26. Disconnect hydraulic power.

CAUTION!

ENSURE ALL FLIGHT CONTROL LINKAGE IS CHECKED FOR PROPER TORQUE AND SAFTIES.

67-19. ADJUSTMENT OF PITCH ANGLE — MAIN ROTOR HUB AND BLADES

SPECIAL TOOLS REQUIRED

NUMBER	NOMENCLATURE
GS18217	Propeller Protractor

1. Adjust minimum pitch angle of main rotor blades to minus 3/4 degree as follows:

   a. Ensure that collective rigging is correct (Paragraph 67-4).

   b. Position collective control stick in full down position and secure with collective friction.

   c. Pull one blade down until hub static stop contacts mast.

   d. Using a GS18217 propeller protractor measure pitch angle of one blade on flat surface of grip, adjacent to blade bolt.

   e. While maintaining hub position (refer to step c), move protractor to opposite grip and measure pitch angle.

   f. Add both pitch angles algebraically, and divide the total by two.

   g. Adjust both pitch links equally, and in the same direction, until negative 3/4 degree pitch is obtained.

2. Apply corrosion preventive compound (C-101) to all threaded surfaces of pitch link assembly.

3. Lockwire jamnuts on 206-010-330 (Figure 67-8) and 206-010-342 (Figure 67-8) pitch link assemblies. If blades are not to be tracked immediately, secure with lockwire.

4. On 206-010-355 pitch link assemblies, secure barrel (6, Figure 67-8) to insert (4) with lockwire. On 206-010-360 pitch link, secure upper jamnut (5) to insert (4) with lockwire.

5. Track main rotor blades. (Refer to Chapter 18.)

67-20. ELECTRICAL NULL – CONTROL TUBE ACTUATOR ASSEMBLY.

NOTE

The upper rod end on control tube actuator assembly must be disconnected before performing the electrical null friction.

1. On lower circuit breaker panel, open FCS and FT circuit breakers.

2. Connect a hydraulic cart to the hydraulic system.

WARNING

DO NOT CONNECT TEST SET TO HELICOPTER WITH ELECTRICAL POWER ON OR CONNECTED THE HELICOPTER; OTHERWISE, SEVERE ELECTRICAL SHOCK TO PRESONNEL AND DAMAGE TO EQUIPMENT CAN RESULT.

3. Connect the test cable between connector J2 of test set T-262-002 and connector J7 located on copilots side of instrument console.

4. Set all switches on the test set in the OFF, NORMAL, or NEUTRAL position as applicable.

5. Set METER INPUT SELECT switch on test set to ACTUATOR POS position.

NOTE

Ensure proper circuit breakers have been opened before connecting external ground electrical power unit.

6. Perform the following steps:

   a. Connect external power to the helicopter.

   b. On upper circuit breaker panel, close ESS 1/ BUS SUPPLY circuit breaker.

   c. On lower circuit breaker panel, close ESS 1 BUS FEEDER/BAT circuit breaker.

NOTE

Power is now applied to the Essential 1 bus.

7. On lower circuit breaker panel, close FCS circuit breaker.

8. Set AXIS SELECT toggle switch on test set to PITCH position. The dc voltmeter shall indicate less than 0.1 volt (right actuator).

9. Set AXIS SELECT toggle switch on test set to ROLL position. The dc voltmeter shall indicate less than 0.1 volt (left actuator).

NOTE

The above values indicate each actuator is in the null position. If either value is not within limits, replace applicable control rod actuator assembly.

10. Open FCS circuit breaker.

11. Remove electrical power from helicopter.

67-21. ANTI-TORQUE CONTROLS.

Anti-Torque controls include control pedals, pedal adjuster, push pull tubes, bellcranks, yaw control tube actuator assembly, yaw trim damper unit, and a pitch control mechanism mounted through the tail rotor shaft. Pedal actuation causes an angular change of tail rotor blades to offset main rotor torque and provide directional control of helicopter.

67-22. TAIL ROTOR CONTROL PEDALS AND ADJUSTER.

Tail rotor control pedals mounted on the pilots compartment deck are connected under the center console to a bellcrank pedal adjuster which provides for manual adjustment of pedal position according to pilots needs.

67-23. REMOVAL – TAIL ROTOR CONTROL PEDALS AND ADJUSTER.

1. Disconnect links (36, Figure 67-9) to right and left pedals (1 and 4) by removing cotter pins (17), nuts (3), aluminum washers (2), spacers (37), and bolts (38).

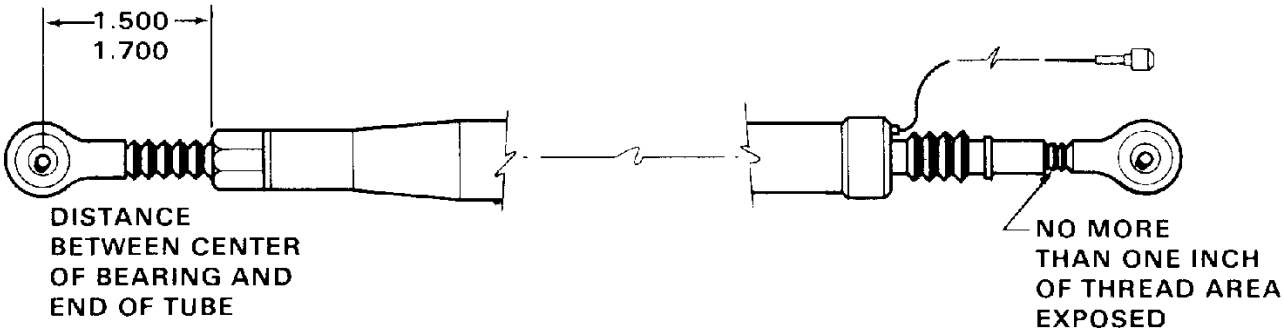

Figure 67-8. Rod End Fitting Adjustments / 206-010-360 Pitch Link Assembly (Sheet 1 of 2)

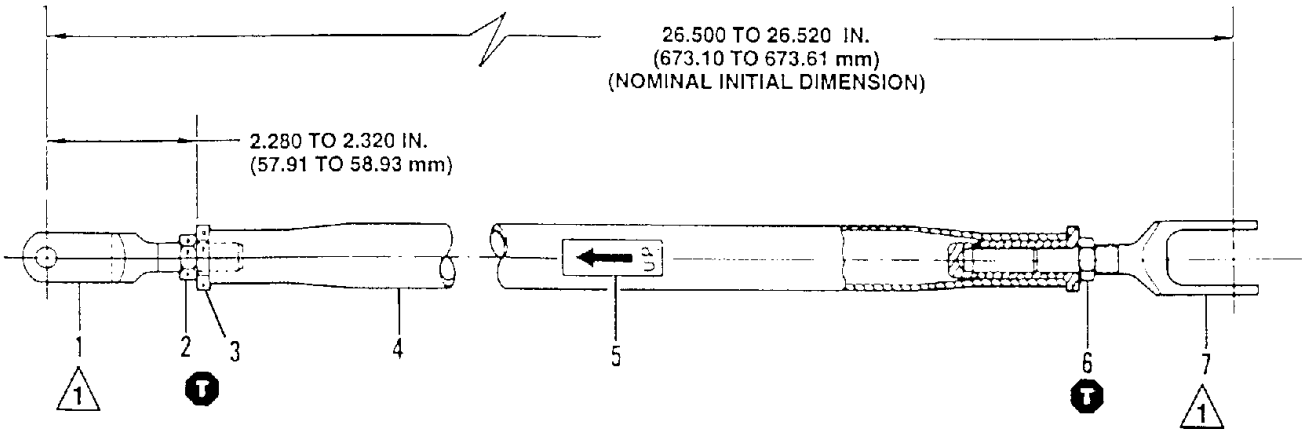

1. Clevis
2. Jamnut
3. Insert
4. Tube
5. Decal
6. Jamnut
7. Clevis

CAUTION

ENSURE THAT DECAL (5) IS POINTING UP

NOTES

1. Apply corrosion preventive compound (C-104) to all threads at each assembly.

T 150 TO 200 IN-LBS (16.95 TO 22.60 Nm)

Figure 67-8. Rod End Fitting Adjustments / 206-010-360 Pitch Link Assembly (Sheet 2 of 2)

2. Disconnect right and left pedals (1 and 4) by removing cotter pin (14), nuts (15), aluminum washers (16), and bolt (35). Lift pedals clear of support (13).

3. Disconnect tube assembly (23) from bellcrank (30) by removing cotter pin (27), nut (28), aluminum washer (29), spacer (31), and bolt (32).

4. Trace leads of pedal switch (10) to the forward section of pedestal and disconnect at butt splices. Tag wires for ease of installation. 5. Remove support (13) from cockpit floor by removing bolts (5), and aluminum washers (6).

6. Remove bellcrank (30) from clevis (18) by removing cotter pin (21), nut (20), aluminum washers (19), and bolt (34). If required remove links (36) from bellcrank (30) by removing cotter pins (25), nuts (26), aluminum washers (24), spacers (39), and bolts (40).

7. Remove pedal adjuster from support (13) by removing cotter pin (33), nut (22), thin washer (11), pedal switch (10), thick washer (9), and pulling bolt (8). Remove knob (120 and clevis (18).

67-24. INSPECTION – TAIL ROTOR CONTROL PEDALS AND ADJUSTER.

1. Inspect bearings and bushings in right and left pedals (1 and 4), Figure 67-12), support (13), clevis (18), tube assembly (23), bellcrank (30), and links (36) for wear and roughness. (Refer to BHT-All-SPM.)

2. Operate pedal adjuster by use of knob (12), through full travel and check for corrosion and binding. Knob should turn freely.

3. Inspect pedals (1 and 4) and pedal support (13) for nicks, scratches, and cracks.

67-25. INSTALLATION – TAIL ROTOR CONTROL PEDALS AND ADJUSTER.

1. Install pedal adjuster in support (13, Figure 67-9) as follows:

   a. Install clevis (18) into forward side of support (13).

   b. Thread knob (12) into aft side of support (13) until bottomed out and contacting clevis.

   c. Install one thick washer (7) under head of bolt (8). Insert bolt (8) through knob (12) and clevis (18).

NOTE

Ensure that leads of pedal switch (10) are facing inboard at installation.

   d. Install one thick washer (9), pedal switch (10), thin washer (11), and nut (22) on bolt (8) at end of clevis (18). Only tighten nut (22) finger tight.

NOTE

During the following adjustments ensure knob (12) is not against either stop. This will cause premature contact of pedal switch (10).

   e. Connect a multimeter across leads of pedal switch (10). Tighten nut (22) until multimeter reads continuity. Slowly back nut (22) off until multimeter ceases to read continuity.

   f. If nut (22) castellation and cotter pin hole in bolt (8) are aligned, install cotter pin (33). If nut castellation and cotter pin hole are not aligned, continue to back nut (22) off until cotter pin (33) can be installed. (Refer to Figure 67-9, section A-A.)

   g. Remove multimeter from pedal switch leads.

2. If filler pads in support (13) are loose or removed, bond with adhesive (C-324).

3. Install bellcrank (30) to clevis (18) and secure with bolt (34), aluminum washers (19), nut (20), and cotter pin (21).

4. Install right and left pedals)1 and 4) to support (13) and secure with bolt (35), aluminum washers (16), nut (15), and cotter pin (14).

5. Connect links (36) to bellcrank (30). Align links to top surface of bellcrank (30) and secure with bolts (40), spacers (39), aluminum washers (24), nuts (26), and cotter pin (25).

6. Connect links (36) to right and left pedals (1 and 4). Align links to pedals and secure with bolts (38), spacers (37), aluminum washers (2), nuts (3), and cotter pin (17).

7. Rotate pedals full left and right, checking for clearance between end of bolt (8) and bellcrank (30). If interference is observed, add thin washers (11) as needed under head of bolt (8) to ensure clearance. This may require reshimming between the pedal switch (10) and nut (22).

NOTE

At all times there must be a washer installed between the following:

a. Bolt head (8) on adjustment knob (12).

b. Clevis (18) and pedal switch (10). (Only a thick washer may be used here).

c. Pedal switch (10) and nut (22).

8. Position and align assembled pedals and support to mounting holes in cockpit floor and secure with bolts (5) and aluminum washers (6).

9. Connect tube (23) to top surface of bellcrank (30) and secure with bolt (32), spacer (31), aluminum washer (29), nut (28), and cotter pin (27).

10. Disconnect adjustable control tube (115) from overhead walking beam (111).

11. Remove access panel from underneath forward center of fuselage.

12. Adjust pedal friction as follows:

a. Place pilot pedals in neutral position.

b. Using a spring scale positioned perpendicular to an connected to pedals, check for a friction of 7 to 8 pounds to move pedals from their neutral position.

c. Adjust friction adjustment screw (53, Figure 67-9, View B) on friction clamp (51) until desired friction of 7 to 8 pounds is obtained. Do not exceed torque of 15 inch-pounds on friction adjustment screw (58) and nut (52).

NOTE

Pedal friction of 7 to 8 pounds is essential to correct pedal switch operation.

13. Connect multimeter across leads of pedal switch (10).

14. Slowly apply pressure to one pedal and verify multimeter reads continuity before pedal movement. Continue applying pressure and move pedal through its entire travel. Monitor the multimeter and ensure continuity exists throughout complete pedal travel. Continuity should cease when pedals are centered. Check both directions of pedal movement.

15. Remove multimeter from leads of pedal switch (10).

16. Install access panel on underneath forward center of fuselage.

17. Reconnect adjustable control tube (115) to overhead walking beam (111).

18. Connect leads of pedal switch (10) to wire harness as noted and remove tags.

67-26. CONNECTING LINKAGE - TAIL ROTOR CONTROL SYSTEM.

Connecting linkage consists of push-pull tubes, bellcranks, yaw control tube actuator assembly, yaw trim damper unit, levers, and supports that connect pilots tail rotor control pedals to the tail rotor pitch change mechanism.

67-27. REMOVAL - CONNECTING LINKAGE.

1. Remove components in any sequence. (Refer to Figure 67-10 and 67-11).

2. Remove attaching hardware as required.

67-28. INSPECTION - CONNECTING LINKAGE.

NOTE

For detailed inspection and repair procedures, refer to BHT 206AB-SERIES-CR&O manual.

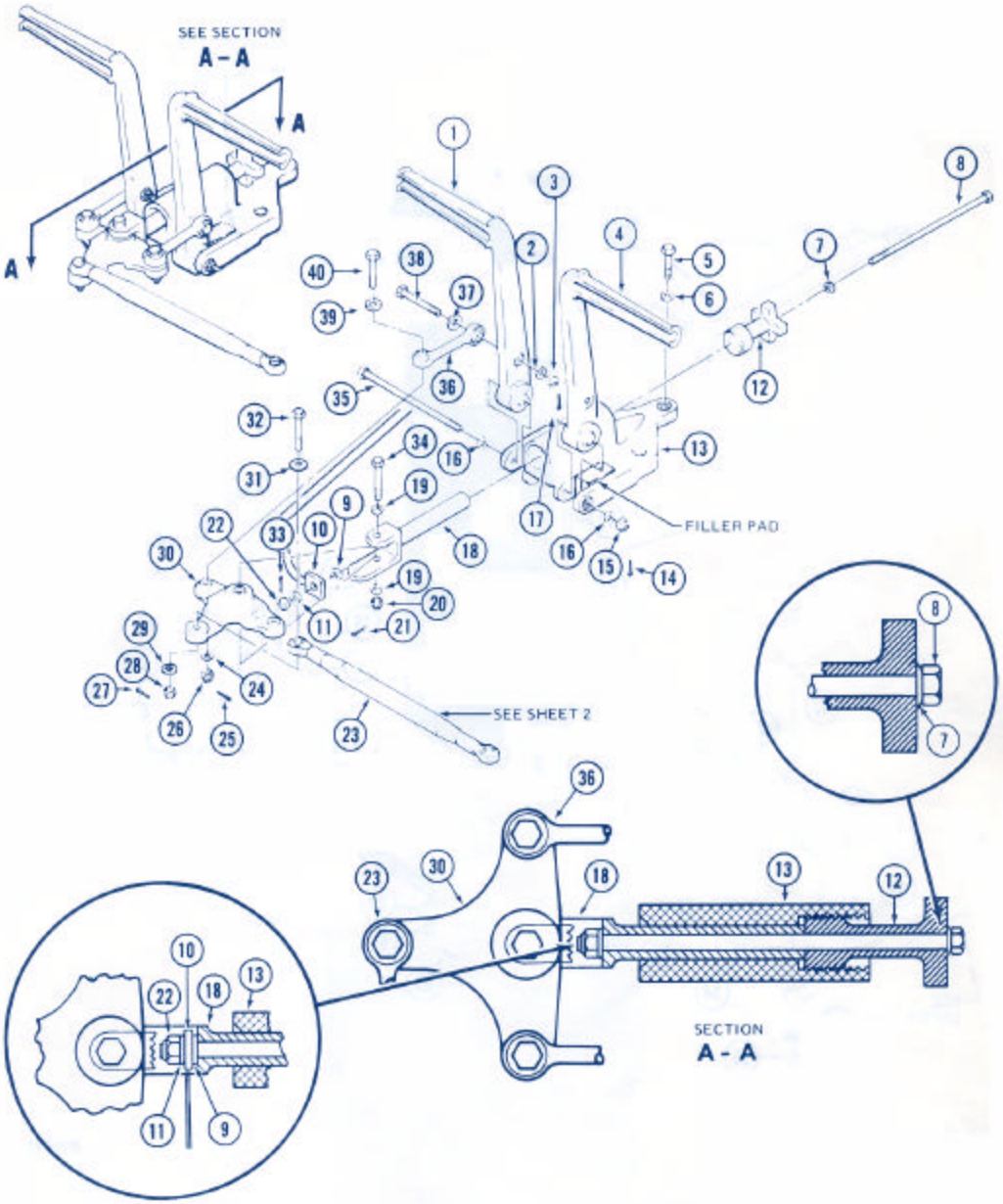

Figure 67-9. Tail Rotor Pitch Control System (Sheet 1 of 4)

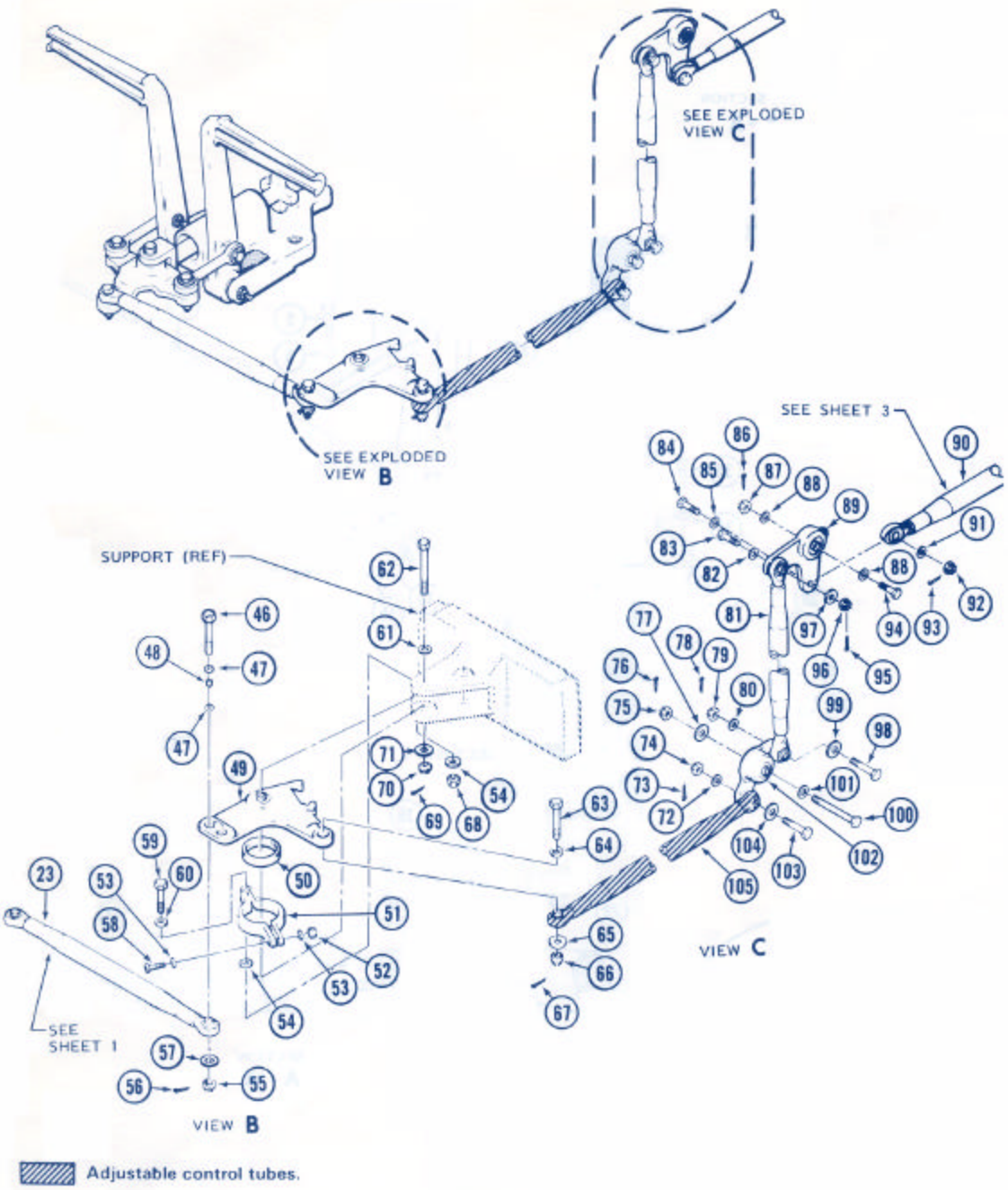

Figure 67-9. Tail Rotor Pitch Control System (Sheet 2 of 4)

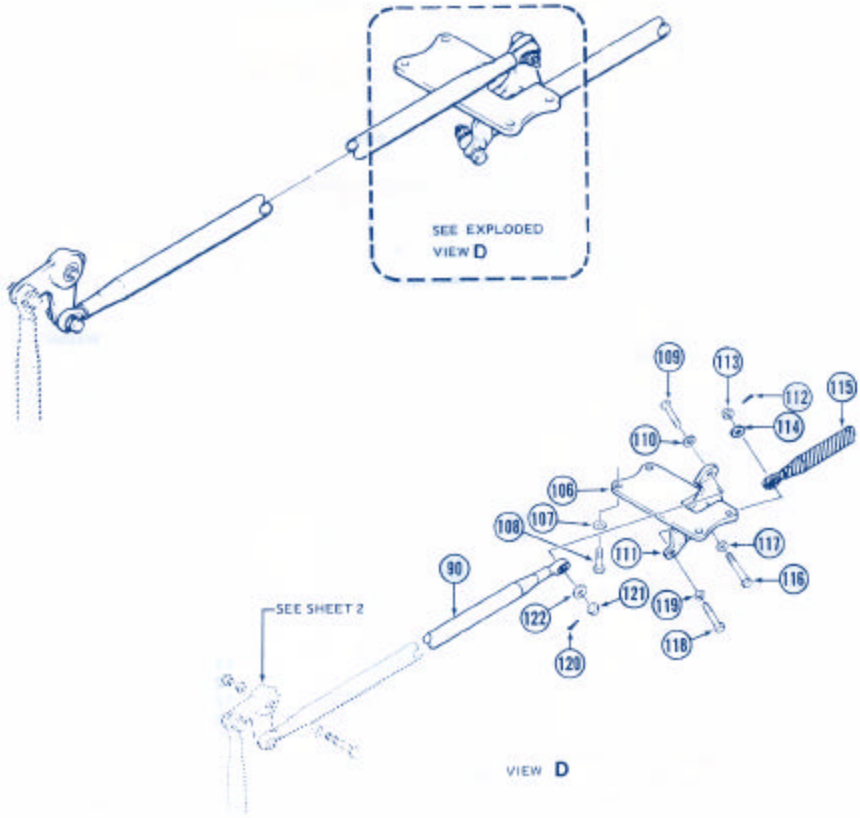

Figure 67-9. Tail Rotor Pitch Control System (Sheet 3 of 4)

1. Right Pedal
2. Aluminum Washer
3. Nut
4. Left Pedal
5. Bolt
6. Aluminum Washer
7. Thick Washer
8. Bolt
9. Thick Washer
10. Pedal Switch
11. Thin Washer
12. Knob
13. Support
14. Cotter Pin
15. Nut
16. Aluminum Washer
17. Cotter Pin
18. Clevis
19. Aluminum Washer
20. Nut
21. Cotter Pin
22. Nut
23. Tube
24. Aluminum Washer
25. Cotter Pin
26. Nut
27. Cotter Pin
28. Nut
29. Aluminum Washer
30. Bellcrank
31. Spacer
32. Bolt
33. Cotter Pin
34. Bolt
35. Bolt
36. Link
37. Spacer
38. Bolt
39. Spacer
40. Bolt
41. Deleted
42. Deleted
43. Deleted
44. Deleted
45. Deleted
46. Bolt
47. Aluminum Washer
48. Spacer
49. Interconnect Bellcrank
50. Sleeve Bearing
51. Clamp
52. Nut
53. Washer
54. Aluminum Washer
55. Nut
56. Cotter Pin
57. Spacer
58. Friction Adjustment Screw
59. Bolt
60. Washer
61. Aluminum Washer
62. Bolt
63. Bolt
64. Aluminum Washer
65. Spacer
66. Nut
67. Cotter Pin
68. Nut
69. Cotter Pin
70. Nut
71. Spacer
72. Aluminum Washer
73. Cotter Pin
74. Nut
75. Nut
76. Cotter Pin
77. Washer
78. Cotter Pin
79. Nut
80. Thin Aluminum Washer
81. Tube
82. Aluminum Washer
83. Bolt
84. Bolt
85. Aluminum Washer
86. Cotter Pin
87. Nut
88. Aluminum Washer
89. Bellcrank
90. Tube
91. Spacer
92. Nut
93. Cotter Pin
94. Bolt
95. Cotter Pin
96. Nut
97. Spacer
98. Bolt
99. Spacer
100. Bolt
101. Aluminum Washer
102. Bellcrank
103. Bolt
104. Spacer
105. Tube
106. Support
107. Aluminum Washer
108. Bolt
109. Bolt
110. Aluminum Washer
111. Walking Beam
112. Cotter Pin
113. Nut
114. Spacer
115. Tube
116. Bolt
117. Aluminum Washer
118. Bolt
119. Aluminum Washer
120. Cotter Pin
121. Nut
122. Spacer.

Figure 67-9. Tail Rotor Pitch Control System (Sheet 4 of 4)

1. Clean control tubes with cloth moistened with solvent (C-304). Do not allow solvent to enter bearings.

2. Inspect control tubes for mechanical and/or corrosion damage.

3. Inspect bearings for security, smooth operation, and axial and radial wear. If wear in either direction exceeds the wear limits specified in BHT-ALL-SPM, the bearing or part shall be replaced.

4. Tag or otherwise identify parts which do not meet inspection standards to ensure that part is repaired. or scrapped, as applicable.

67-29. INSTALLATION - TAIL ROTOR CONTROL LINKAGE.

NOTE

The following procedure provides installation instructions for the complete tail rotor control system linkage. It is recommended that those control tubes that have adjustable rod ends be connected but not secured until the rigging procedure is accomplished.

1. Install interconnect bellcrank (49, Figure 67-10) and control linkage to anti-torque support as follows: (Refer to Figure 67-8, sheet 2, view B.)

   a. If sleeve bearing (50) was removed, press new sleeve bearing onto interconnect bellcrank (49).

   b. Position clamp (51) over sleeve bearing (50) on interconnect bellcrank (49). Loosely assemble screw (58), washers (53), and nut (52) to open end of clamp (51). Open side of clamp should be positioned to the left side of the helicopter. Clamp tension shall be adjusted during rigging procedures.

   c. Insert interconnect bellcrank (49) with installed clamp (51) and sleeve bearing (50) into anti-torque support located on lower cabin forward panel. Secure interconnect bellcrank (49) with bolt (62), aluminum washer (61), spacer (71), nut (70), and cotter pin (69).

   d. Reposition clamp (51) in anti-torque support and secure with bolt (59), washer (60), above clamp, aluminum washers (54) on each side of anti-torque support, and nut (68).

   e. Align rod end of tube (23) to right hole of large arm on interconnect bellcrank (49). Install bolt (46) with aluminum washers (47) and spacer (48) through top surface of interconnect bellcrank (49) into rod end bearing of tube (23), and secure with spacer (57), nut (55), and cotter pin (56).

   f. Position fixed end of tube (105) to left lower side of interconnect bellcrank (49) at small arm. Secure with bolt (63), aluminum washer (64), spacer (65), nut (66), and cotter pin (67).

2. Install bellcranks (89 and 102) with connecting control linkage as follows:

   a. Install lower bellcrank (102) to support and secure with bolt (100), aluminum washers (101) and washers (77), nut (75) and cotter pin (76).

   b. Position tube (105) to lower arm of bellcrank (102), and secure with bolt (103), spacer (104), aluminum washer (72), nut (74), and cotter pin (73).

   c. Install vertical tube (81) and secure to lower bellcrank (102) with bolt (98), spacer (99), thin aluminum washer (80), nut (79), and cotter pin (78).

   d. Install upper bellcrank (89) to support and secure with bolt (94), aluminum washers (88), nut (87), and cotter pin (86). Connect vertical tube (81) to upper bellcrank (89) with bolt (83), aluminum washer (82), spacer (97), nut (96), and cotter pin (95).

   e. Install tube (90) and secure to lower arm of bellcrank (89), with bolt (84), aluminum washer (85), spacer (91), nut (92), and cotter pin (93).

3. Install walking beam (111) and support (106) with connecting control linkage as follows:

   a. Install walking beam (111) in support (106) and secure with bolt (116), and aluminum washer (117). Secure head of bolt to small hole in ear of support (106) with lockwire (C-405).

b. Install support (106) to airframe and secure with bolts (108) and aluminum washers (107).

c. Position tube (90) to upper arm of walking beam (111) and secure with bolt (109), aluminum washer (110), spacer (122), nut (121), and cotter pin (120).

d. Position fixed end of tube (115) to lower arm of walking beam (111) and secure with bolt (118), aluminum washer (119), spacer (114), nut (113), and cotter pin (112). Ensure adjustable rod end of tube (115) is aft and that exposed thread length does not exceed 1.0 inch.

4. Install control tube actuator assembly (8, Figure 67-9), walking beam (24) and control rod linkage as follows:

NOTE

Ensure that adjustable rod end of tube (1) is located at arm (9) and that rod end exposed thread length does not exceed 1.0 inch.

a. Connect tube (1) and control tube actuator assembly (8) to arm (9) and secure with bolts (7), spacers (6), washers (5), spacers (4), nuts (3), and cotter pins (2).

b. Install walking beam (24) in support structure and secure with bolt (23), aluminum washers (22), nut (21), and cotter pin (20)1.

c. Connect control tube actuator assembly (8) to lower arm of walking beam (24) and secure with bolt (15), shim (14), spacer (13), washer (12), nut (11), and cotter pin (10).

d. Position tube (30) to support arm of walking beam (24) and secure with bolt (29), aluminum washer (28), spacer (27), nut (26), and cotter pin (25).

CAUTION!

USE ONLY MS17825-4 NUT (38) ON BOLT (40). NO SUBSTITUTION PERMITTED AT THIS LOCATION. BOLT (40) MUST BE INSTALLED FROM LOWER SIDE.

e. Install bellcrank (36) to support structure with long arm to right side of helicopter and secure with bolt (40), aluminum washers (39), nut (38), and cotter pin (37).

f. Position tube (30) on top of long arm of bellcrank (36) and secure with bolt (35), spacer (34), aluminum washer (33), nut (32), and cotter pin (31).

g. Connect control tube actuator assembly (8) electrical connector J10 to bracket mounted electrical connector P10.

5. Install tail rotor pitch change mechanism.

6. Rig tail rotor controls. (Refer to paragraph 67-30.)

67-30. RIGGING - TAIL ROTOR CONTROLS.

CAUTION!

MAXIMUM OF 1.0 INCH EXPOSED THREADS ALLOWED ON ALL ADJUSTABLE ROD END BEARINGS. TOLERANCE ON RIGGING DIMENSIONS ARE PLUS OR MINUS 0.03 INCH, UNLESS OTHERWISE STATED.

NOTE

Rigging procedures require the use of a work aid and a propeller protractor or inclinometer to set the proper mean tail rotor blade angle.

Control tube actuator assembly (13, Figure 67-14) is preadjusted to specifications. No adjustment of this assembly is required.

1. Ensure that the control tube actuator assembly is in the electrical null position as follows:

a. On lower circuit breaker panel, open FCS and FORCE TRIM circuit breakers.

b. On upper circuit breaker panel, open YAW FCS, FORCE TRIM, and AVIONICS INV circuit breakers.

c. On upper circuit breaker panel, set AVIONICS MASTER switch to OFF.

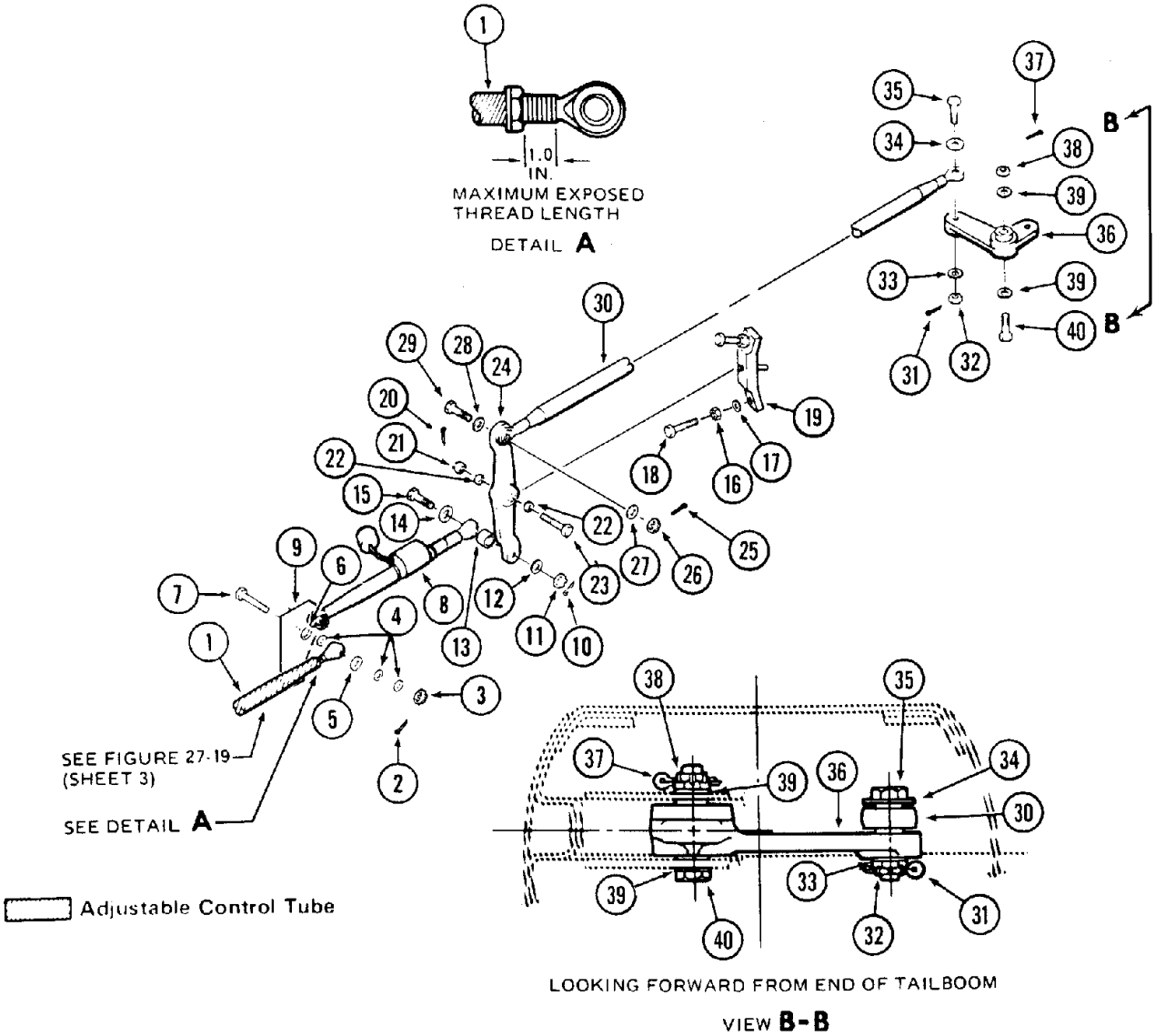

1. Tube
2. Cotter Pin
3. Nut
4. Washer
5. Spacer
6. Spacer
7. Bolt
8. Control Tube Actuator Assy.
9. Arm
10. Cotter Pin
11. Nut
12. Washer
13. Spacer
14. Shim
15. Bolt
16. Nut
17. Washer
18. Bolt
19. Stops Assy
20. Cotter Pin
21. Nut
22. Aluminum Washer
23. Bolt
24. Walking Beam
25. Cotter Pin
26. Nut
27. Spacer
28. Aluminum Washer
29. Bolt
30. Tube
31. Cotter Pin
32. Nut
33. Aluminum Washer
34. Spacer
35. Bolt
36. Bellcrank
37. Cotter Pin
38. Nut
39. Aluminum Washer
40. Bolt

Figure 67-10. Tail Rotor Aft Pitch Control System

WARNING

DO NOT CONNECT TEST SET TO HELICOPTER WITH ELECTRICAL POWER ON OR CONNECTED TO THE HELICOPTER: SEVERE ELECTRICAL SHOCK TO PERSONNEL AND DAMAGE TO EQUIPMENT CAN RESULT.

d. Connect the test cable between connector J2 of test set T-262-002 and connectors J7 and J23 located on copilot side of instrument console.

e. Set all switches on the test set to OFF, NORMAL, or NEUTRAL position as applicable.

f. Set METER INPUT SELECT switch on test set to ACTUATOR POS.

CAUTION!

ENSURE APPROPRIATE CIRCUIT BREAKERS HAVE BEEN PULLED BEFORE CONNECTING EXTERNAL GROUND ELECTRICAL POWER UNIT, TO PRECLUDE POSSIBLE DAMAGE TO EQUIPMENT.

g. Perform the following steps:

(1) Connect external power to the helicopter.

(2) On upper circuit breaker panel, close ESS 1/BUS SUPPLY circuit breaker.

(3) On lower circuit breaker panel, close ESS 1 BUS FEEDER/BAT circuit breaker.

NOTE

Power is now applied to the essential 1 bus.

(4) On upper circuit breaker panel, close ESS 2 BUS SUPPLY/BAT circuit breaker.

NOTE

Power is now applied to the essential 2 bus.

h. On upper circuit breaker panel, close YAW FCS and AVIONICS INV circuit breakers.

i. On upper circuit breaker panel, set AVIONICS MASTER switch to ON.

j. On lower circuit breaker panel, close FCS and FORCE TRIM circuit breakers.

k. Depress STAB switch to ON then OFF.

l. Set AXIS SELECT toggle switch on test set to YAW position. The do voltmeter shall indicate less than 0.1 volt.

NOTE

The above value indicates actuator is in the null position. If value is not as specified, replace control rod/actuator assembly.

m. Set AVIONICS MASTER switch to OFF.

n. Open FCS, FORCE TRIM, YAW FCS, and AVIONICS INV circuit breakers.

o. Remove electrical power from helicopter.

2. Remove access panel from underneath forward center of fuselage.

3. Set pedals (1, Figure 67-11) to midtravel with pedal adjuster (2). Install forward rigging pin (3, view A).

4. Ensure all fixed length control tubes (4, 7, and 8) and control tube/actuator assembly (13) are installed and connected. Refer to Detail B, sheet 1, Figure 67-10 for typical rod end bearing installation.

5. Disconnect adjustable control tube (5) from bellcrank (6), adjustable control tube (9) from yaw trim damper unit arm (12) and adjustable rod assembly (21) from bellcrank (20). Disconnect safety wires from stop assembly jamnuts (16) in tail section and run stops (17) in against mount (18).

6. Hold left pedal (1) forward against rigging pin (3). Set bellcrank (6) to a dimension of 1.46 inches from floor line as shown in Detail C. Adjust control tube (5) to fit bellcrank (6) and connect. Torque control tube (5) rod end bearing jamnut 80 to 100 inch-pounds.

7. Temporarily connect adjustable rod assembly (21) at bellcrank (20) to tail rotor pitch change lever.

8. Adjust control tube (9) at trim damper unit arm (12) until bellcrank (20) is set 0.17 to 0.23 inch from adjustable rod assembly (21) as shown in Detail D. During this adjustment, make certain the tail rotor blades do not bottom out in the yoke. If necessary, readjust rod assembly (21) to prevent blades from bottoming. Connect control tube (9) to trim damper unit arm (12) and torque control tube (9) rod end bearing jamnut 80 to 100 inch-pounds.

9. Pull the flapping stop bumper over on the outboard side of the flapping stop. Insert the flapping alignment work aid, tapered side outboard, between the flapping stop and the outboard side of the tail rotor yoke, to position and hold the hub and blade assembly perpendicular to the gearbox output shaft.

10. Rotate the tail rotor hub and blades (22) within 0.5 degrees of horizontal position, as shown in View F,. Use a level or protractor on leading edge of forward blade to level horizontally. A stand or prop may be used to hold the blade in this position if the main rotor is not installed.

11. Install the work aid 5.0 inches from tip on forward blade of the tail rotor hub and blades (22) as shown in view F and Section G-G. Secure tool with elastic retainers or wing nuts.

12. With the tail rotor hub and blades (22) positioned in accordance with Steps 10 and 11, place a propeller protractor or inclinometer on the outboard surface of the work aid as shown in Section G-G. Adjust rod assembly (21) to set the forward blade angle to read 17.5 to 18 degrees.

13. Remove the work aid from the forward blade and install it 5.0 inches from the tip of the aft blade. Using a protractor or inclinometer, measure and record the angle of the aft blade. Add the angle setting of the forward blade and the angle obtained from the aft blade together and divide by two to determine the mean blade angle. Readjust rod assembly (21) as necessary to obtain the required mean blade angle listed in Step 12. Connect rod assembly (21) to bellcrank (20) and torque rod end bearing jamnut 80 to 100 inch-pounds.

14. Remove work aids from tail rotor hub and blade assembly. Install bumper behind stop. Check for freedom of operation of each pitch link, with tail rotor blades flapped to both extreme positions. Check with pedal assembly full right, then at full left position.

15. Coat rod end bearing threads and jamnuts on adjustable control tubes (5, 9) and rod assembly (21) with corrosion preventive compound (C-101).

16. Adjust stop assembly (15) as follows:

    a. Holding left pedal (1) forward against rigging pin (3), adjust upper stop (17) for a clearance of 0.001 to 0.005 between stop (17) and walking beam (14). Tighten jamnut (16) against mount (18) and lockwire (C405).

    b. Holding right pedal (1) forward against rigging pin (3), adjust lower stop (17) for a clearance of 0.001 to 0.005 between stop (17) and walking beam (14). Tighten jamnut (16) against mount (18) and lockwire (C405).

    c. Remove rigging pin (3).

17. Disconnect adjustable control tube (9) from overhead walking beam.

18. Adjust pedal friction as follows:

    a. Place pilot pedals in neutral position.

    b. Using a spring scale positioned perpendicular to and connected to pedals, check for a friction force of 7 to 8 pounds to move pedals from their neutral position.

    c. Adjust friction adjustment screw (10, view A) on friction clamp (11) until desired friction of 7 to 8 pounds is obtained. Do not exceed torque of 15 inch-pounds on friction adjustment screw (10) and nut.

19. Reinstall access panel.

20. Reconnect adjustable control tube (9) to overhead walking beam.

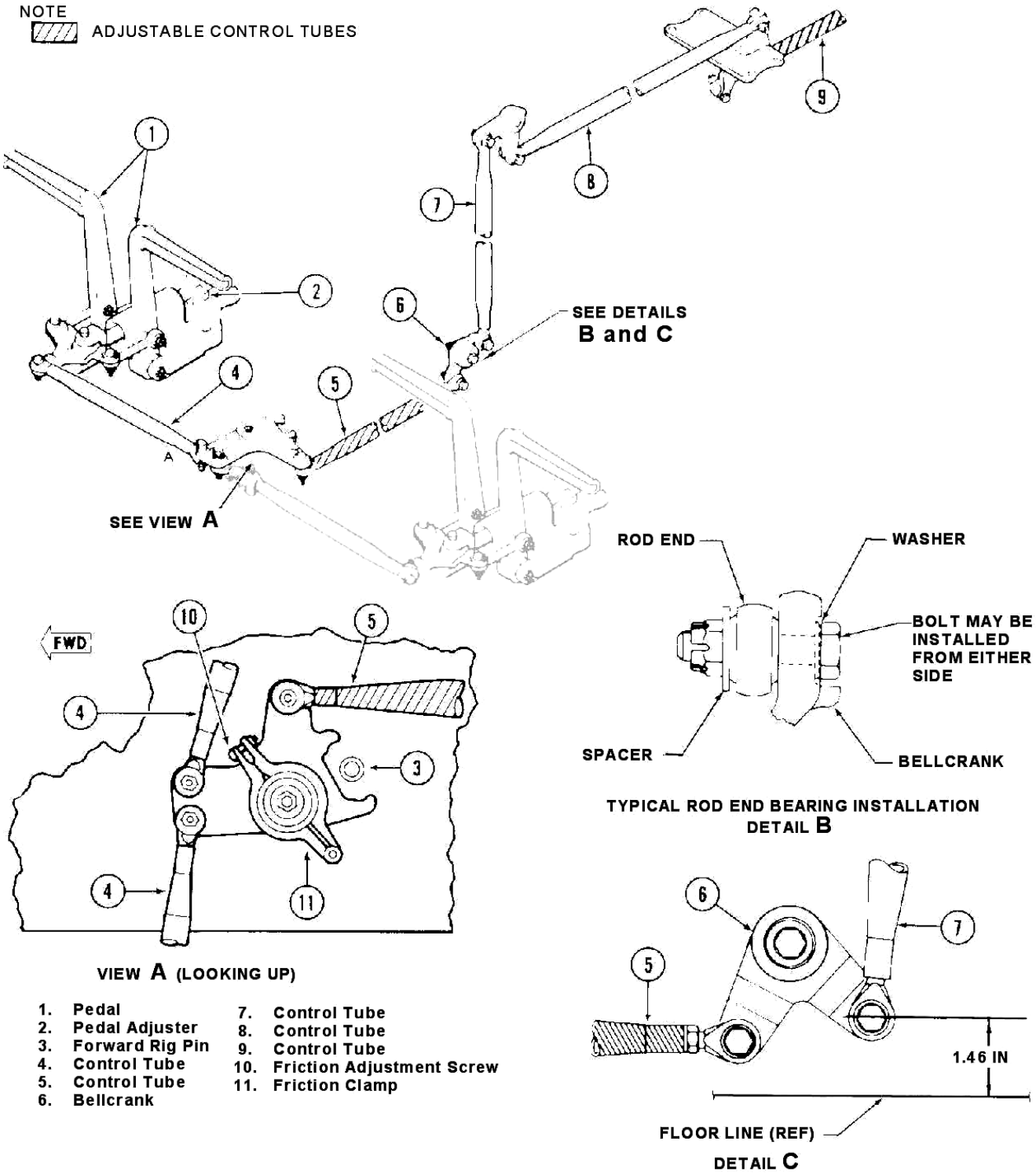

1. Pedal
2. Pedal Adjuster
3. Forward Rig Pin
4. Control Tube
5. Control Tube
6. Bellcrank
7. Control Tube
8. Control Tube
9. Control Tube
10. Friction Adjustment Screw
11. Friction Clamp

Figure 67-11. Anti-Torque Control System Rigging (Sheet 1 of 3)

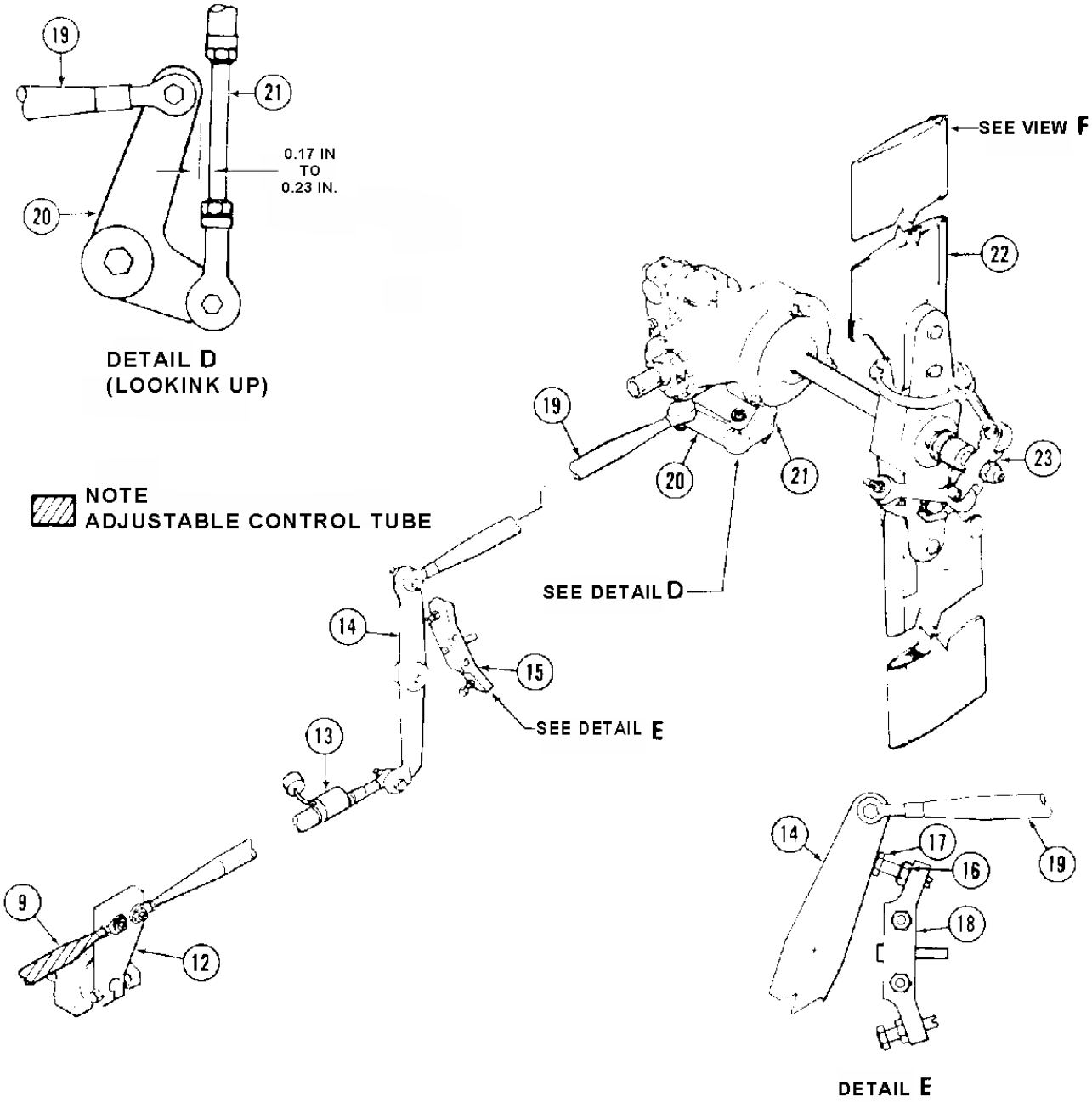

12. Yaw Trim Damp Unit Arm
13. Control Tube Actuator Assembly
14. Walking Beam
15. Stop Assembly
16. Jam Nut
17. Stop
18. Mount
19. Control Tube
20. Bellcrank
21. Rod Assembly
22. Tail Rotor Hub and Blade
23. Crosshead

Figure 67-11. Anti-Torque Control System Rigging (Sheet 2 of 3)

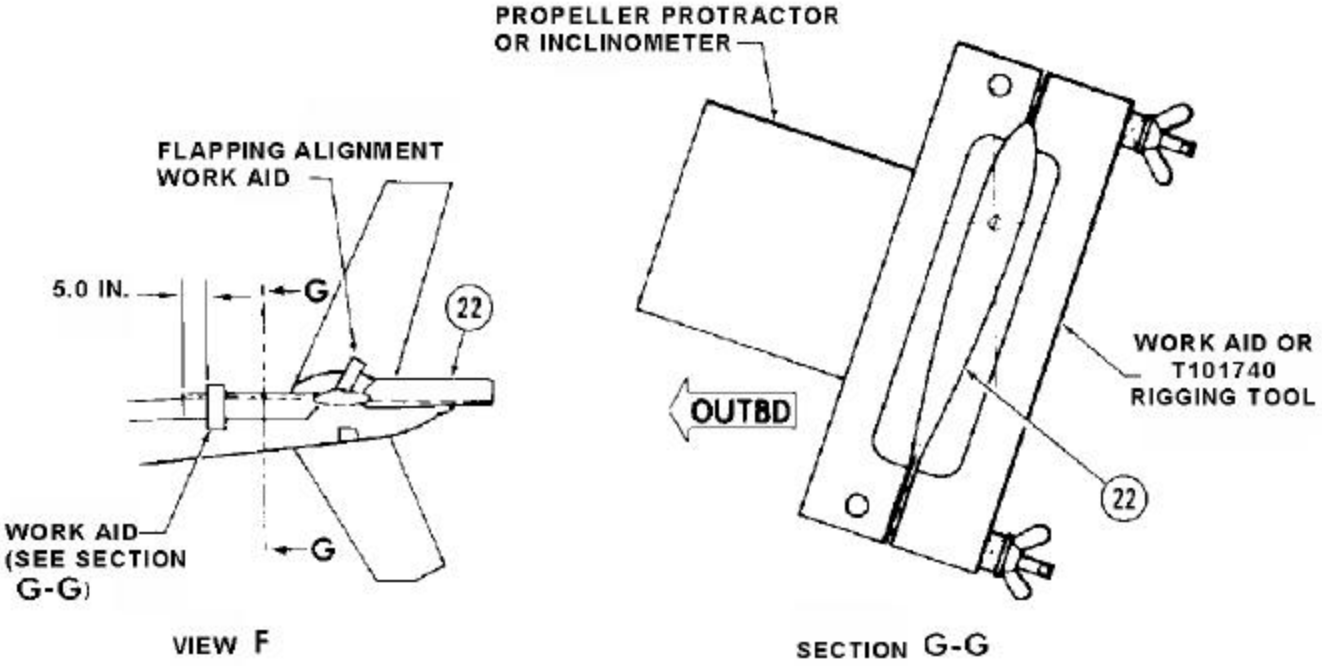

Figure 67-11. Anti-torque Control System Rigging (Sheet 3 of 3).

21. Check complete anti-torque control system to ensure that all safety devices (cotter pins, lock-wire, jamnuts, etc.) are installed and secured. Check controls for freedom of movement without binding or interference with tail rotor hub and blades flapped in both extreme positions.

22. During ground run-up, balance tail rotor pedal forces in accordance with paragraph 67-31.

23. Dynamic balance tail rotor hub and blades using Chadwick-Helmuth track and balance equipment or procedures.

67-31. DYNAMIC BALANCING - TAIL ROTOR PEDAL FORCES (Without Tail Rotor Boost Kit.)

1. Remove access panel from underneath forward center of fuselage.

2. Loosen screw (9, Figure 67-12, View B) and nut (10) on clamp (12) until all friction is relieved on bellcrank (11). Reinstall access panel.

NOTE

Eyebolt (7), spring (8) and bracket (13) are not used in this configuration.

3. Check pitch horns (3, View A) on each tail rotor blade (6) to ensure that correct quantity of counterweight washers (2) are installed. Each hub and blade assembly must contain 40 counterweight washers (20 on each pitch horn) with five on each side of the lugs. If counterweight washers arrangement is incorrect, accomplish the following:

   a. Remove cotter pin (5), nut (4), counterweight washers (2), and bolts (1) from two locations on each pitch horn (3).

   b. Assemble 40 AN970-3 counterweight washers (2) in eight stacks.

   c. Position five counterweight washers (2) next to head of bolts (1) and install from inboard side of lugs on pitch horns (3). Install five counterweight washers to outboard side with nuts (4). Torque nuts 15 to 30 inch-pounds and secure with cotter pins (5).

   d. Accomplish counterweight washer installation on lugs of opposite pitch horn.

4. Prepare helicopter for ground runup. Position helicopter into wind and ground run at 100 percent N2.

5. Place tail rotor pedals in neutral position and observe if pedals creep when not held by foot pressure.

6. If left pedal creeps forward, counterweight washers (2) are too heavy and shall be adjusted in accordance with step 7. Displace pedals approximately 1.0 inch from neutral and recheck for creep. If pedals do not creep proceed to step 8.

CAUTION!

TO PREVENT UNBALANCING TAIL ROTOR HUB AND BLADE ASSEMBLY, MEASURE EACH COUNTERWEIGHT WASHER AS IT IS REMOVED TO ENSURE AN EQUAL THICKNESS AND QUANTITY OF WASHERS ARE REMOVED AT ALL FOUR POINTS ON THE TWO PITCH HORNS.

7. Adjust by removing counterweight washers (2) equally at four lugs on pitch horns (3). Replace removed AN970-3 washers with AN960PD10 washers equally at four lugs on pitch horns. Use NAS1303-13D through NAS1303-19D bolts (1) to obtain correct thread engagement. Quantity and type of washers and bolts must be the same on all four lugs of pitch horns.

8. Perform test flight and recheck pedal balance at normal cruise airspeed. Readjust as desired by the pilot in accordance with steps 6 and 7.

9. Adjust pedal friction as follows:

   a. Remove access panel from underneath forward center of fuselage.

   b. Disconnect adjustable control tube (9, Figure 67-10) from overhead walking beam.

   c. Place pilots pedals in neutral position.

   d. Using a spring scale positioned perpendicular to and connected to pedals, check for a friction force of 7 to 8 pounds to move pedals from their neutral position.

   e. Adjust nut (10, Figure 67-11, View B) on screw (9) at clamp (12) until desired friction of 7 to 8 pounds is obtained. Do not exceed torque of 15 inch-pounds on screw and nut. Reinstall access panel.

   f. Reconnect adjustable control tube (9, Figure 67-10) to overhead walking beam.

67-32. FLIGHT CONTROLS

This chapter contains information and maintenance instructions for the differences in TH-57B flight controls installation. The differences include the pilot and copilot cyclic stick grips, pivot at base of pilots cyclic stick, lever at base of copilots cyclic stick, pilots collective stick control box, quick disconnect copilot cyclic and collective sticks, copilots directional control pedals and cyclic stick trim system. Two force gradient springs, with magnetic brakes, are incorporated for artificial control feel and stabilization of controls. For basic flight control maintenance instructions, refer to Chapter 67.

67-33. COLLECTIVE PITCH STICK.

The collective stick incorporates a twist grip throttle (6, Figure 67-2) for control of engine power in cutoff, ground idle release control (5) allows twist grip to pass flight idle and move to full open. Switches are installed on the switch plate for control of starter (2), landing light (3), and GOV RPM (4). Switch guard (1) is located over started switch and is spring loaded closed. Refer to Chapter 76 for throttle rigging.

67-34. CYCLIC STICK GRIP.

The cyclic stick grip incorporates two switches. One switch is located on the front of the grip and operates ICS, and the second detent operates the radios. The other switch is located on the top left side of the grip and operates the force trim release. (See Figure 67-8.)

67-35. FORCE TRIM.

Electrically operated force trim consisting of magnetic brakes and force gradient, and are connected to cyclic for stabilizing controls and force trim functions. The magnetic brakes are identical for lateral and fore and aft except for position of the arm on the magnetic brake shaft. (Refer to Figure 67-4.)

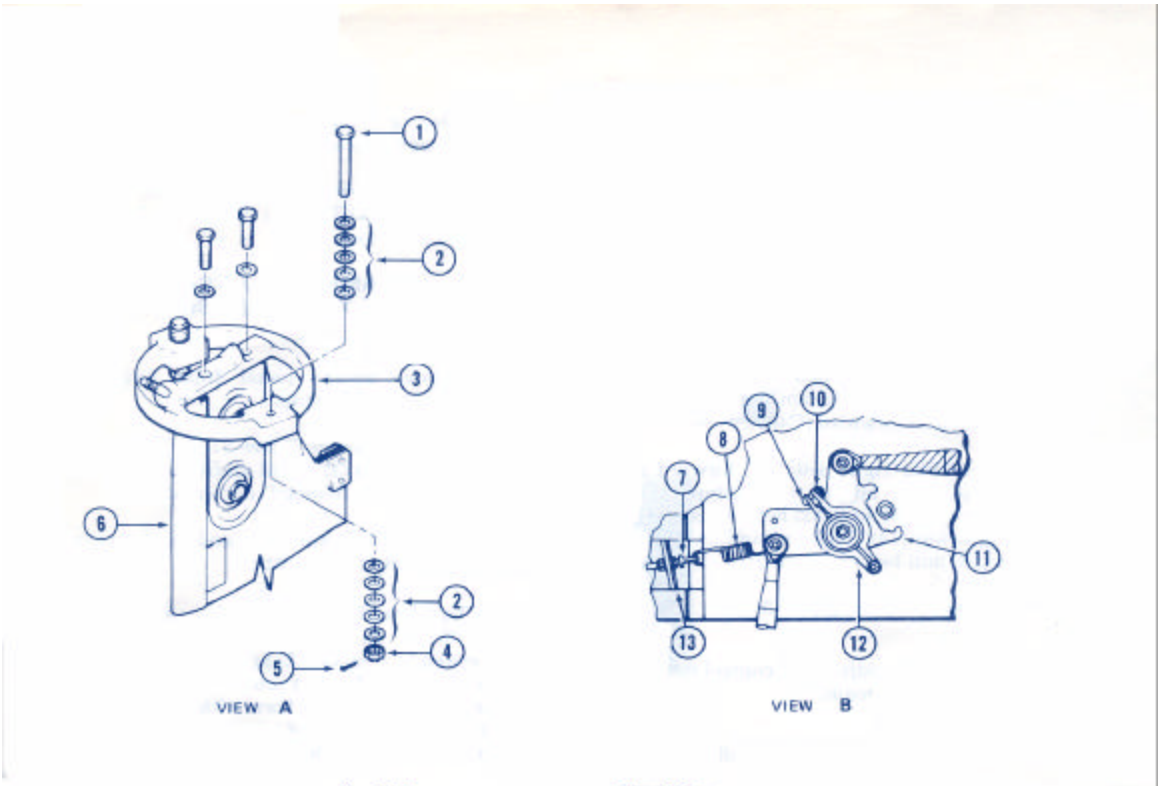

1. Bolt
2. Counterweight Washers
3. Pitch Horn
4. Nut
5. Cotter Pin
6. Tail Rotor Blade
7. Eyebolt
8. Spring
9. Screw
10. Nut
11. Bellcrank
12. Clamp
13. Bracket

Figure 67-12. Balance of Tail Rotor Pedal Forces

67-36. RIGGING — FORCE TRIM.

1. Center cyclic stick force trim by installing AN5 rigging bolt (22, view D Figure 67-4) and apply friction to keep stick from being moved.

2. For lateral system, place cyclic stick full left with force gradient (11, Figure 67-5) disconnected from pivot (20, Figure 67-4) view D. Install arm on magnetic brake as shown in view C with force gradient attached to magnetic brake arm. Adjust tube (15) to overtravel attaching point in pivot by one diameter of bolt hole.

3. Move cyclic stick full right. Move force gradient and magnetic brake arm full right. Check that tube (15) overtravels attaching point in pivot by one diameter of bolt hole. If not, readjust tube (15) to have approximately equal overtravel. Tighten jamnut on tube (15) and connect to pivot.

4. For fore and aft system, move cyclic stick full forward with force gradient (3, Figure 67-5) disconnected from pivot. Install arm on magnetic brake as shown in view E with force gradient connected to arm. Adjust tube (23, Figure 67-4) to overtravel attaching point in pivot by one diameter of bolt hole.

5. Move cyclic stick full aft. Move force gradient and magnetic brake arm full aft. Check that tube (23) overtravels attaching point in pivot by one diameter of bolt hole. If not, readjust tube (23) to have approximately equal overtravel. Tighten jamnut on tube (23) and connect to pivot.

6. Remove rigging bolt (22).

67-37. REMOVAL — MAGNETIC BRAKE.

1. Remove forward seats and access panels.

2. Disconnect electrical connection.

3. Disconnect force gradient (3 and 11, Figure 67-5) from magnetic brake arm. Remove bolts and washers attaching magnetic brake (9 and 12) to airframe.

67-38. INSPECTION — MAGNETIC BRAKE

1. Inspect magnetic brakes (9 and 12, Figure 67-5) for corrosion, unobstructed travel, security of electrical connector and security of mounting.

2. Inspect shaft, splines and arm for nicks and excessive wear.

3. Inspect case and arm for freedom of movement and full travel.

67-39. INSTALLATION — MAGNETIC BRAKE.

CAUTION!

IF BRAKE OR ARM IS REPLACED, INDEX ARM ON BRAKE IN ACCORDANCE WITH PARAGRAPH 67-6.

1. Check position of arm on brake assembly.

2. Position magnetic brake (9 or 12, Figure 67-5) over mounting hole in airframe and install four bolts (6 or 13) and washers (7 or 14).

3. Install spacer (8) on brake arm stud, install force gradient (3 or 11) on arm, install spacer (2), nut (5), and cotter pin (4).

4. Connect electrical power lead to magnetic brake (9 or 12) and lockwire (C405).

5. Apply electrical power to magnetic brake (9 or 12) and check operation.

6. Install all access covers and panels. Install forward seats.

67-40. REMOVAL — FORCE GRADIENT.

CAUTION!

DO NOT INTERMIX FORCE GRADIENT ASSEMBLIES. REPLACE WITH CORRECT PART NUMBER.

1. Remove forward seats and panels to gain access to cyclic system.

2. Remove nuts, bolts, and spacers from each end of force gradient. Remove force gradient.

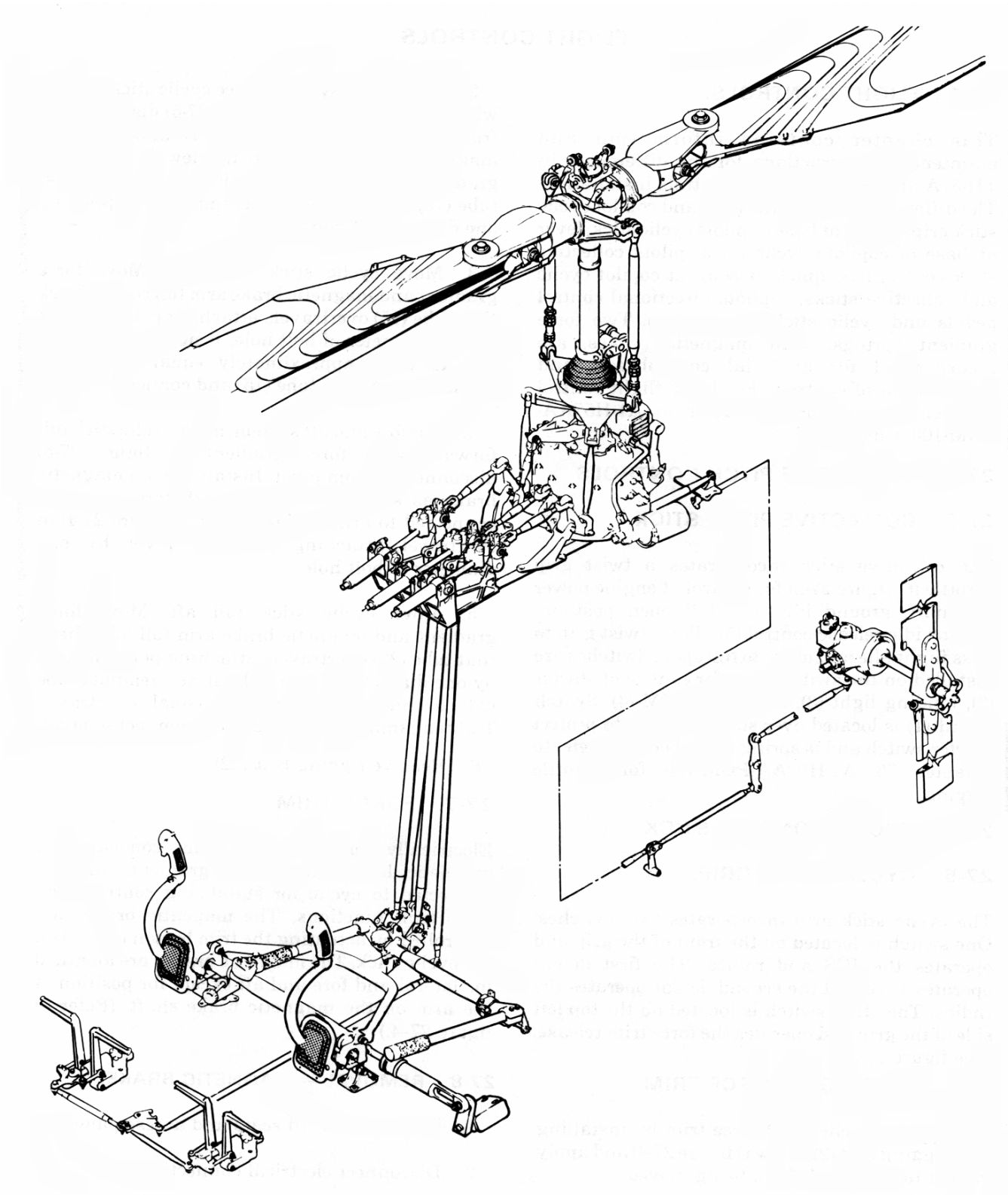

Figure 67-13. Flight Control System

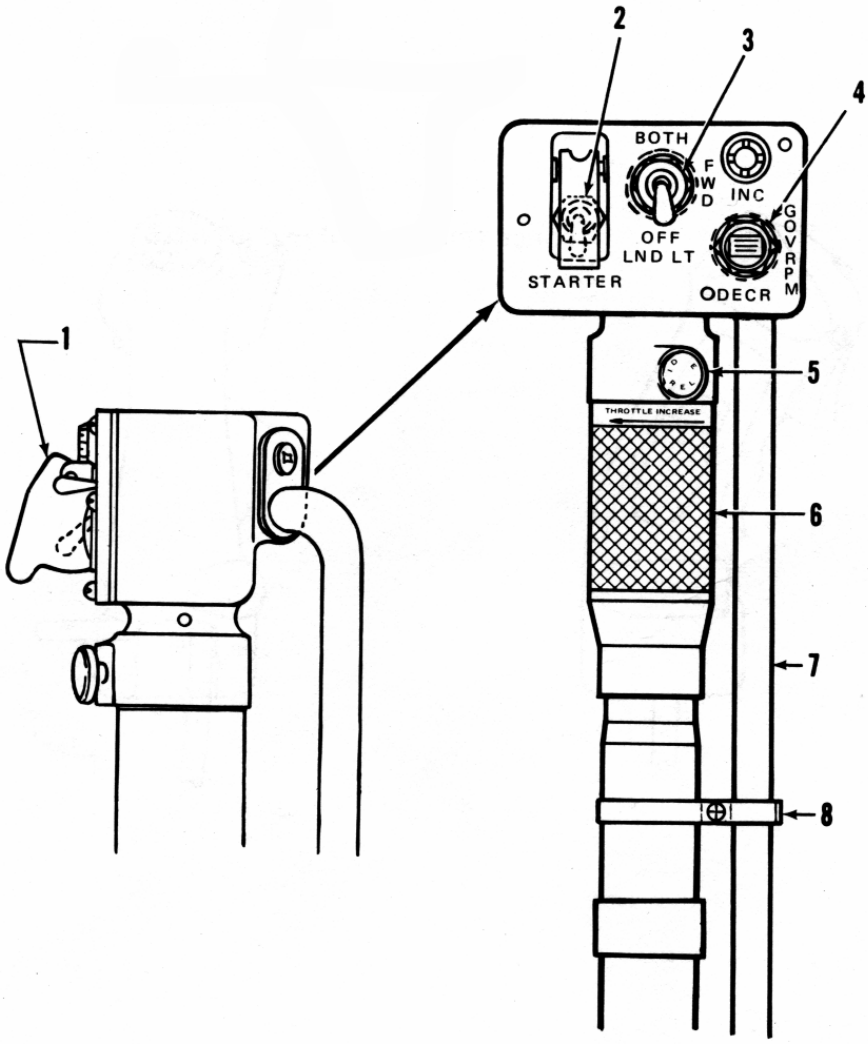

1. Guard
2. Starter switch
3. Landing lights
4. Governor switch
5. Engine idle release control
6. Throttle
7. Conduit
8. Clamp

Figure 67-14. Collective Stick

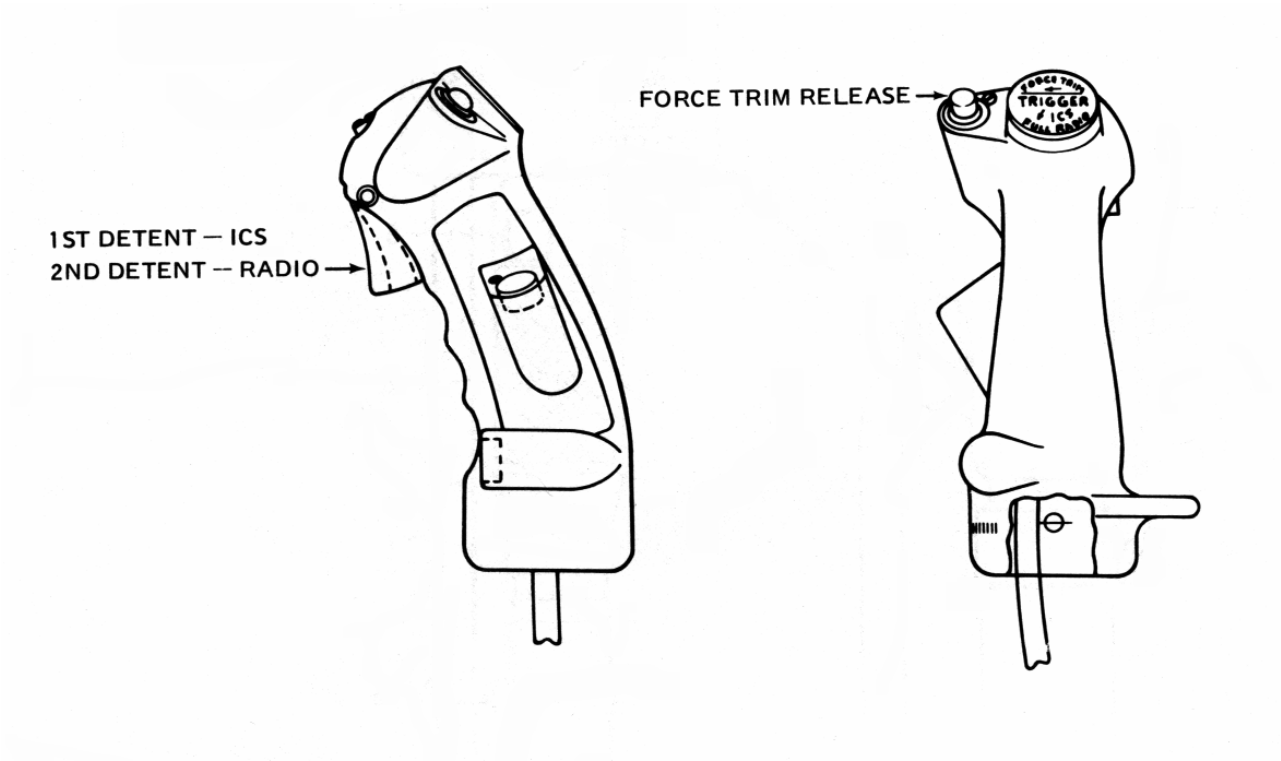

Figure 67-15. Cyclic Stick Grip

67-41. INSPECTION — FORCE GRADIENT.

1. Inspect bearing for freedom of movement.
2. Inspect housing for cracks.
3. Inspect shaft for thread condition.

67-42. DISASSEMBLY — FORCE GRADIENT ASSEMBLY.

1. Cut lockwire and unscrew threaded cap (2, Figure 67-6 and 67-7) from cylinder assembly.
2. Remove spring assembly (1) from cylinder assembly (4).

67-43. INSPECTION — FORCE GRADIENT ASSEMBLY.

Inspect threads on cap and in cylinder assembly.

67-44. REPAIR OR REPLACEMENT — FORCE GRADIENT ASSEMBLY.

1. Replace cap and cylinder assembly if threads are stripped, worn or otherwise damaged.
2. Replace cylinder bearing if it is loose, rough, or binding. Center new bearing within 0.030 inch and roll stake to cylinder.
3. Check spring assembly (1, Figures 67-16) for 2.6 to 3.6 pounds of force for fore and aft gradient assembly and 3.7 to 4.7 pounds of force for lateral gradient assembly. If force cannot be obtained by adjusting nut (9), replace spring (1) in either gradient.

67-45. REASSEMBLY — FORCE GRADIENT ASSEMBLY.

1. Adjust spring assembly (1, Figures 67-16 and 67-17) for 2.6 to 3.6 pounds of force, by adjusting check nuts (9) for fore and aft gradient and 3.7 to 4.7 pounds for lateral gradient.
2. Position spring assemble (1) in cylinder assembly (4) and install cap (2). Screw cap (2) in until all noticeable end play of spring assembly is eliminated.
3. Install lockwire (C-405) on cap (2) in both directions (Figures 67-16 and 67-17.)
4. Recheck for noticeable end play of spring assembly.

67-46. INSTALLATION – FORCE GRADIENT.

CAUTION!

DUE TO DIFFERENT PRELOADS AND LENGTHS, ENSURE THAT THE CORRECT PART NUMBER FORCE GRADIENT IS INSTALLED.

NOTE

If a new force gradient or rod end is installed, set correct length in accordance with rigging.

1. Install lateral force gradient (11, Figure 67-16) as follows:
   a. Install spacer (8) on brake arm shaft, position force gradient (11) on shaft and secure with spacer (2), nut (5), and cotter pin (4).
   b. Install spacer (2) on bolt (10), install bolt through force gradient (11) and torque tube, secure with washer (15), nut (5), and cotter pin (4).
2. Install fore and aft force gradient (3) as follows:
   a. Install spacer (8) on brake arm shaft, position force gradient (3) on shaft and secure with spacer (2), nut (5), and cotter pin (4).
   b. Position a spacer (2 and 16) on each side of rod end fitting and insert bolt (1) through rod end pivot assembly. Secure with washer (15), nut (5), and cotter pin (4).

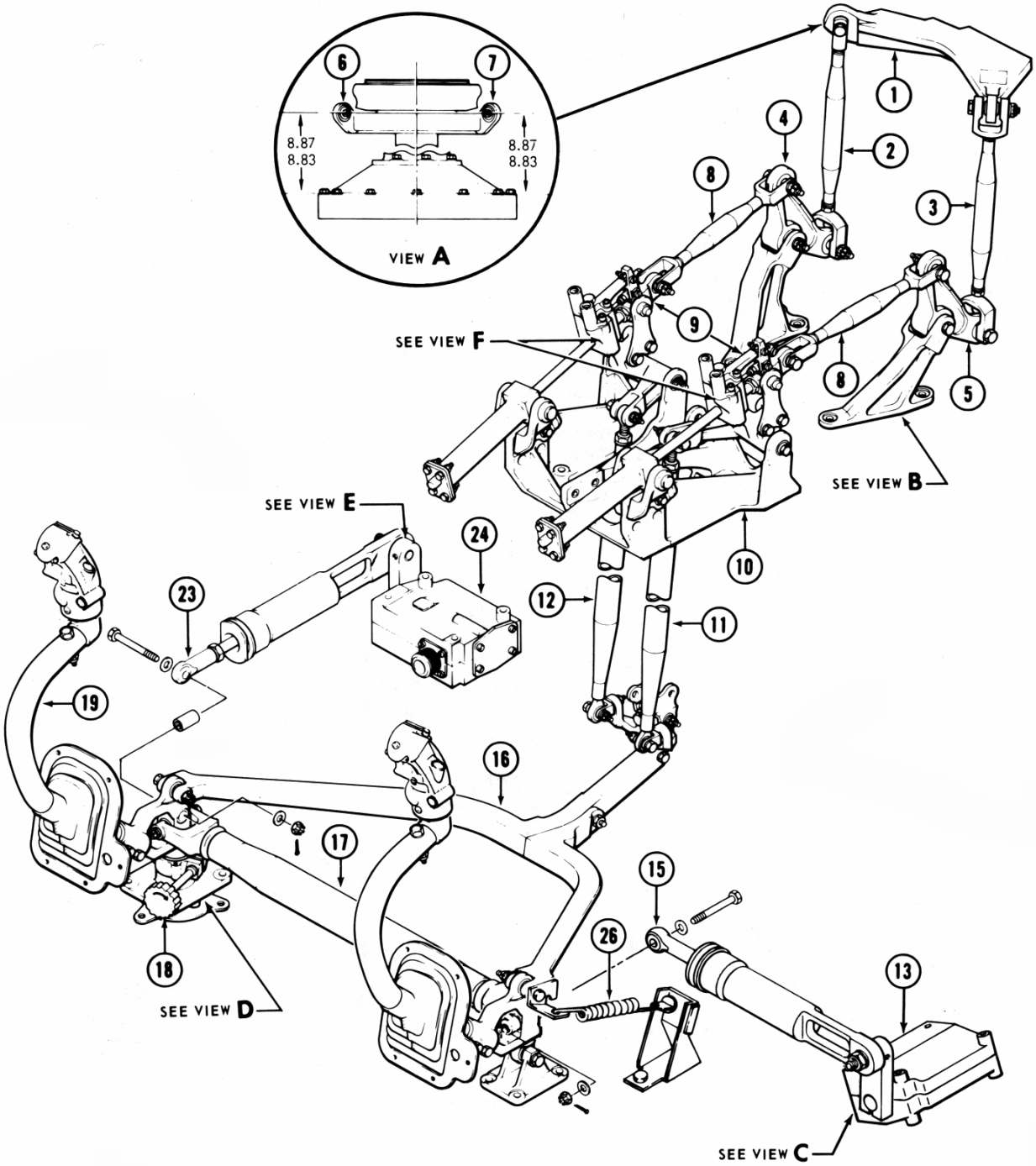

Figure 67-16. Cyclic Control Rigging (Sheet 1 of 2)

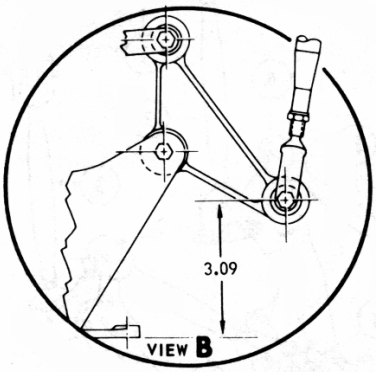

1. Swashplate Inner Ring
2. Control Tube
3. Control Tube
4. Bellcrank
5. Bellcrank
6. Right Horn
7. Left Horn
8. Cylinder Extension Tube
9. Cylinder Valve
10. Cylinder Support Assembly
11. Control Tube
12. Control Tube
13. Magnetic Brake
14. Arm
15. Tube
16. Yoke
17. Torque Tube
18. Cyclic Friction Adjuster
19. Pilot's Cyclic Control
20. Pivot Assembly
21. Deleted
22. Bolt, Rigging
23. Tube
24. Magnetic Brake
25. Arm
26. Spring Assembly

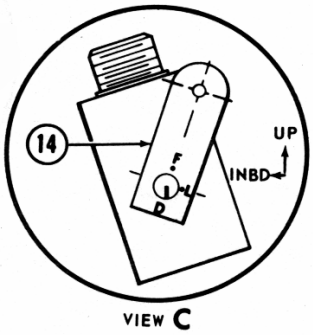

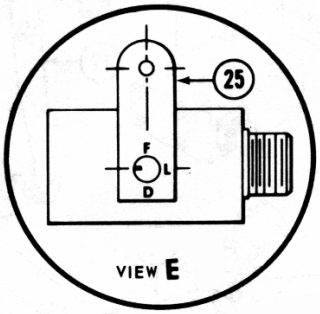

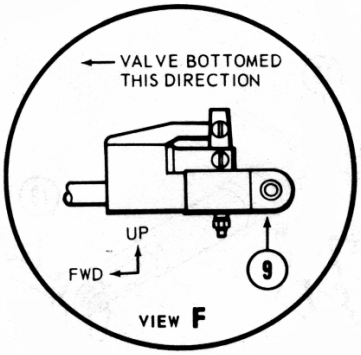

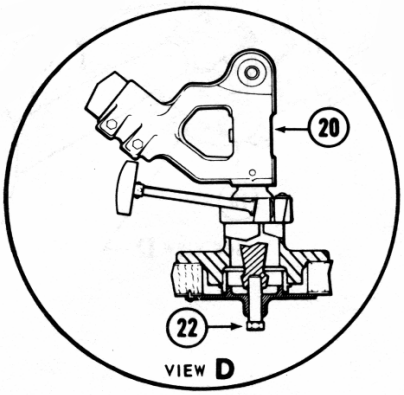

Figure 67-16. Cyclic Control Rigging (Sheet 2 of 2)

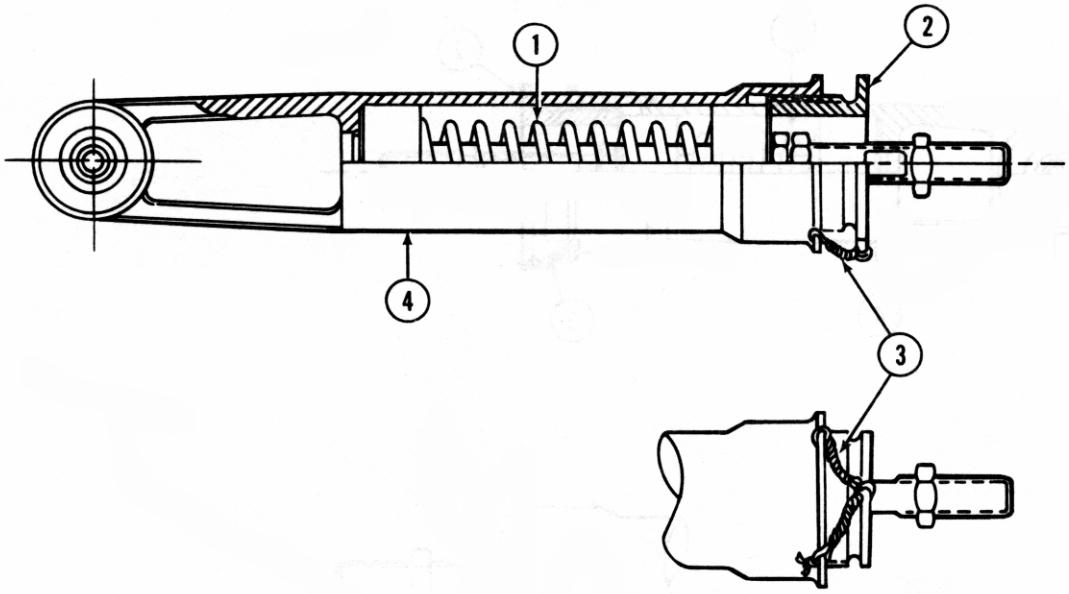

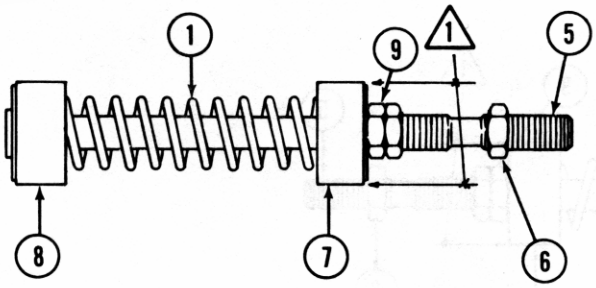

NOTE:

1 **Apply 2.6 to 3.6 pounds force before positioning locknuts in locked position.**

1. **Spring**
2. **Cap**
3. **Lockwire**
4. **Cylinder**
5. **Shaft**
6. **Nut**
7. **Front guide**
8. **Aft guide**
9. **Locknuts**

Figure 67-17. Fore, Aft and Lateral Force Gradient (Sheet 1 of 2)

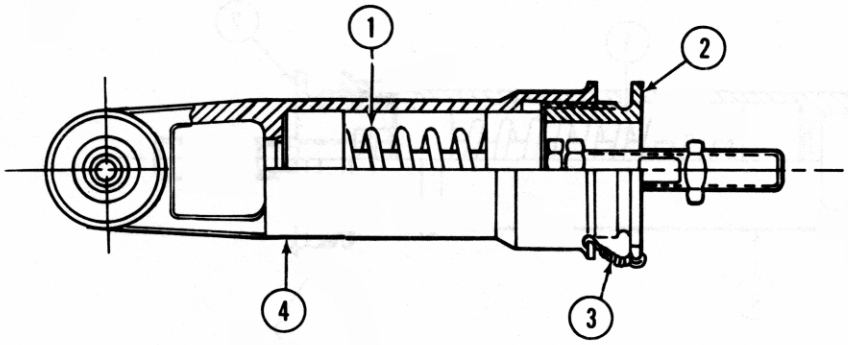

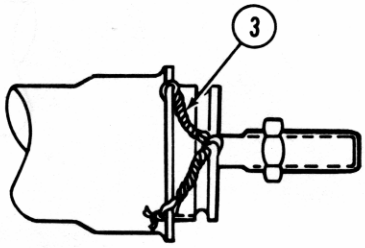

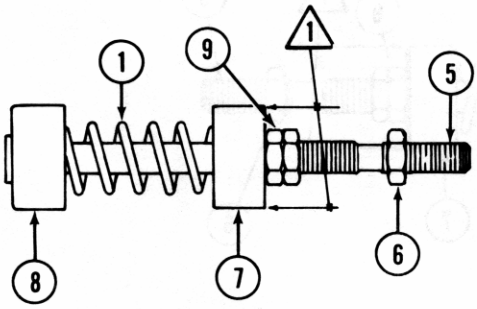

NOTE:

1 **Apply 3.7 to 4.7 pounds force before positioning locknuts in locked position.**

1. **Spring**
2. **Cap**
3. **Lockwire**
4. **Cylinder**
5. **Shaft**
6. **Nut**
7. **Front guide**
8. **Aft guide**
9. **Locknuts**

Figure 67-17. Fore, Aft and Lateral Force Gradient (Sheet 2 of 2)