NAVAIR 02B-5DG-6-2
1 September 2005
Change 5 - 1 March 2012

TECHNICAL MANUAL

DEPOT MAINTENANCE

TURBOPROP ENGINE

NAVY MODEL
T56-A-427

This manual is supplemented by and is incomplete without NAVAIR 02B-5DG-6-1 and NAVAIR 02B-5DG-6-1-1 for the depot level maintenance of T56-A-427 turboprop engines.

DISTRIBUTION STATEMENT C. Distribution authorized to U.S. Government agencies only and their contractors to protect publications required for official use or for administrative or operational purposes only (1 September 2005). Other requests for this document shall be referred to Commander, Naval Air Systems Command (PMA-231), 47123 Buse Rd, Patuxent River, MD 20670-1547.

DESTRUCTION NOTICE - For unclassified, limited documents, destroy by any method that will prevent disclosure of contents or reconstruction of the document.

PUBLISHED BY DIRECTION OF
COMMANDER, NAVAL AIR SYSTEMS COMMAND

0802LP1121720

NUMERICAL INDEX OF EFFECTIVE WORK PACKAGES/PAGES

List of Current Changes

Original 0	1 September 2005	Change 3	1 March 2010
Change 1	1 May 2008	Change 4	15 February 2012
Change 2	1 May 2009	Change 5	1 March 2012

Only those work packages assigned to the manual are listed in this index. Dispose of superseded work packages. If changed pages are issued to a work package, insert the changed pages in the applicable work package. The portion of text affected in a changed or revised work package is indicated by change bars in the outer margin of each column of text. Changes to illustrations are indicated by pointing hands or change bars, as applicable.

Total number of pages in this manual is 1158 consisting of the following:

WP/ Page No.	Change No.
Title	5
A - E	5
TPDR-1	5
TPDR-2 (blank)	5
HMWS-1 - HMWS-13	0
HMWS-14 (blank)	0
WP 001 00	
1	1
2 thru 36	0
WP 002 00	
1 thru 9	0
10 (blank)	0
WP 003 00	
1 thru 3	0
4 (blank)	0
WP 004 00	
1 thru 17	0
18 (blank)	0
WP 005 00	
1 thru 10	0
WP 006 00	
1 thru 2	2
WP 007 00	
1 thru 5	0
6 (blank)	0
WP 008 00	
1 thru 11	0
12 (blank)	0
WP 009 00	
1 thru 4	0
WP 010 00	
1 thru 2	0
WP 011 00	
1 thru 3	0
4 (blank)	0
WP 012 00	
1 thru 2	0
WP 013 00	
1 thru 2	0
WP 014 00	
1 thru 5	0
6 (blank)	0
WP 015 00	
1 thru 6	0
WP 016 00	
1 thru 3	0
4 (blank)	0
WP 017 00	
1 thru 10	0
WP 018 00	
1	5
2 thru 14	0
15 thru 16	5
17	0
18	5
19	0
20	5
21 thru 22	0
23	4
24	5
25 thru 28	0
29	1
30 thru 32	0
WP 019 00	
1 thru 3	0
4 (blank)	0
WP 020 00	
1 thru 9	0
10 (blank)	0
WP 021 00	
1	1
2 thru 29	0
30	1
31 thru 33	0
34 (blank)	0
WP 022 00	
1	2
2	0
3	2

NUMERICAL INDEX OF EFFECTIVE WORK PACKAGES (CONT)

WP/ Page No.	Change No.
4 thru 5	0
6 (blank)	0
WP 023 00	
1 thru 2	0
WP 024 00	
1 thru 3	0
4 (blank)	0
WP 025 00	
1 thru 5	0
6 (blank)	0
WP 026 00	
1 thru 15	0
16 (blank)	0
WP 027 00	
1 thru 2	0
WP 028 00	
1 thru 5	0
6 (blank)	0
WP 029 00	
1 thru 2	1
3 thru 12	0
WP 030 00	
1	2
2	1
3 thru 4	0
5	2
6 thru 9	0
10 thru 12	2
13 thru 15	0
16	2
17 thru 18	0
19	2
20	0
WP 031 00	
1 thru 3	0
4 (blank)	0
WP 032 00	
1 thru 13	0
14 (blank)	0
WP 033 00	
1	3
2 thru 5	0
6	3
7	1
8 thru 40	0
WP 034 00	
1 thru 2	0
WP 035 00	
1 thru 3	0
4 (blank)	0
WP 036 00	
1 thru 6	0
WP 037 00	
1 thru 27	0
28 (blank)	0
WP 038 00	
1 thru 9	0
10 (blank)	0
WP 039 00	
1	1
2 thru 7	0
8	1
WP 040 00	
1 thru 5	0
6 (blank)	0
WP 041 00	
1 thru 23	0
24 (blank)	0
WP 042 00	
1 thru 14	0
WP 043 00	
1	5
2 thru 3	0
4	5
5 thru 10	0
WP 044 00	
1 thru 2	0
WP 045 00	
1 thru 5	0
6 (blank)	0
WP 046 00	
1 thru 3	0
4 (blank)	0
WP 047 00	
1 thru 10	0
WP 048 00	
1 thru 3	0
4 (blank)	0
WP 049 00	
1 thru 2	0
WP 050 00	
1 thru 6	0
WP 051 00	
1 thru 6	0
WP 052 00	
1 thru 5	0
6 (blank)	0
WP 053 00	
1 thru 2	0

NUMERICAL INDEX OF EFFECTIVE WORK PACKAGES (CONT)

WP/ Page No.	Change No.
8 (blank)	0
WP 054 00	
1 thru 3	0
4 (blank)	0
WP 055 00	
1 thru 7	0
8 (blank)	0
WP 056 00	
1 thru 2	0
WP 057 00	
1 thru 2	0
WP 058 00	
1 thru 2	0
WP 059 00	
1 thru 3	0
4 (blank)	0
WP 060 00	
1 thru 4	0
WP 061 00	
1 thru 3	0
4 (blank)	0
WP 062 00	
1 thru 5	0
6 (blank)	0
WP 063 00	
1 thru 6	0
WP 064 00	
1 thru 12	0
WP 065 00	
1 thru 15	0
16 (blank)	0
WP 066 00	
1 thru 4	0
WP 067 00	
WP 056 00	
1	1
2 thru 5	0
6	1
6A	1
6B (blank)	1
7 thru 10	0
WP 068 00	
1 thru 24	0
WP 069 00	
1 thru 7	0
8 (blank)	0
WP 070 00	
1 thru 4	0
WP 071 00	
1 thru 14	0
WP 072 00	
1 thru 3	0
4 (blank)	0
WP 073 00	
1 thru 2	4
WP 074 00	
1	5
2 thru 11	0
12	5
13	0
14 (blank)	0
WP 075 00	
1 thru 8	0
WP 076 00	
1 thru 4	0
WP 077 00	
1 thru 9	0
10 (blank)	0
WP 078 00	
1 thru 2	0
WP 079 00	
1 thru 2	0
WP 080 00	
1 thru 3	0
4 (blank)	0
WP 081 00	
1	1
2 thru 14	0
15	1
16 thru 19	0
20 (blank)	0
WP 082 00	
1 thru 8	0
WP 083 00	
1 thru 4	0
WP 084 00	
1 thru 2	0
WP 085 00	
1 thru 2	0
WP 086 00	
1 thru 3	0
4 (blank)	0
WP 087 00	
1 thru 5	0
6 (blank)	0
WP 088 00	
1	1
2	0
3	1
4 thru 10	0
WP 089 00	
1 thru 3	0

NUMERICAL INDEX OF EFFECTIVE WORK PACKAGES (CONT)

WP/ Page No.	Change No.
WP 090 00	
1 thru 7	0
8 (blank)	0
WP 091 00	
1 thru 5	0
6 (blank)	0
WP 092 00	
1	1
2 thru 7	0
8	1
9	0
10 (blank)	0
WP 093 00	
1	4
2 thru 5	0
6 thru 7	1
8	4
9 thru 10	0
WP 094 00	
1 thru 4	0
WP 095 00	
1 thru 2	0
WP 096 00	
1 thru 4	4
5 thru 7	0
8 (blank)	0
WP 097 00	
1 thru 5	0
6 (blank)	0
WP 098 00	
1 thru 3	5
4 thru 20	0
WP 099 00	
1	1
2 thru 5	0
6	1
7 thru 8	0
WP 100 00	
1 thru 6	0
WP 101 00	
1 thru 13	0
14 (blank)	0
WP 102 00	
1 thru 6	0
WP 103 00	
1 thru 5	0
6 (blank)	0
WP 104 00	
1 thru 2	4
3 thru 4	0
WP 105 00	
1 thru 4	0
WP 106 00	
1 thru 6	0
WP 107 00	
1	1
2	0
3	1
4 (blank)	1
WP 108 00	
1 thru 2	4
3 thru 12	0
WP 109 00	
1 thru 7	0
8 (blank)	0
WP 110 00	
1	1
2	0
3	1
4 (blank)	1
WP 111 00	
1 thru 9	0
10 (blank)	0
WP 112 00	
1 thru 3	0
4 (blank)	0
WP 113 00	
1 thru 5	0
6 (blank)	0
WP 114 00	
1 thru 13	0
14 (blank)	0
WP 115 00	
1 thru 6	0
WP 116 00	
1 thru 6	0
WP 117 00	
1 thru 3	0
4 (blank)	0
WP 118 00	
1 thru 6	0
WP 119 00	
1 thru 3	0
4 (blank)	0
WP 120 00	
1 thru 4	0
WP 121 00	
1 thru 7	0
8 (blank)	0
WP 122 00	
1 thru 4	0
WP 123 00	
1 thru 3	0
4 (blank)	0

NUMERICAL INDEX OF EFFECTIVE WORK PACKAGES (CONT)

WP/ Page No.	Change No.
WP 124 00	
1 thru 3	0
4 (blank)	0
WP 125 00	
1 thru 2	0
WP 126 00	
1 thru 2	0
WP 127 00	
1 thru 3	0
4 (blank)	0
WP 128 00	
1 thru 9	0
10 (blank)	0
WP 129 00	
1 thru 3	0
4 (blank)	0
WP 130 00	
1 thru 32	0
WP 131 00	
1 thru 3	0
4 (blank)	0
WP 132 00	
1 thru 6	0
WP 133 00	
1 thru 2	0
WP 134 00	
1 thru 11	0
12 (blank)	0
WP 135 00	
1 thru 3	0
4 (blank)	0
WP 136 00	
1 thru 8	0
WP 137 00	
1 thru 13	0
14 (blank)	0
WP 138 00	
1 thru 9	0
10 (blank)	0
11	0
12 (blank)	0
13	0
14 (blank)	0
15	0
16 (blank)	0
17	0
18 (blank)	0
19 thru 30	0
WP 139 00	
1 thru 3	0
4 (blank)	0
WP 140 00	
1 thru 2	0

LIST OF TECHNICAL PUBLICATIONS DEFICIENCY REPORTS INCORPORATED

DEPOT MAINTENANCE

TURBOPROP ENGINE

MODEL T56-A-427

The List of Technical Publications Deficiency Reports (TPDR) is not cumulative. At each change to the manual, the list is revised to delete previous entries. If no TPDR data is applicable to the current change, the word “None” is entered in the report control number column.

Valid TPDR data incorporated in the current change will be entered by reporting activity TPDR originator report control number in the Report Control Number column and the location of the data in the Location column. Incorporated data is identified by work package number (WP), page number (Pg), paragraph number (P), figure number (F) and table number (T) as appropriate.

Report Control Number	Location
N65886-12-7818	WP 018 00 Pgs 15, 16,18, 20, 24, WP 043 00 Pgs 4, WP 074 00 Pg 12 WP 098 00 Pg 2

WARNINGS APPLICABLE TO HAZARDOUS MATERIALS

Warnings in this manual alert personnel to hazards associated with the use of hazardous materials. Additional information related to hazardous materials is provided in OPNAVINST 5100.23, Navy Occupational Safety and Health (NAVOSH) program manual, NAVSUPINST 5100.27, Navy Hazardous Material Control Program, and the DOD 6050.5, Hazardous Materials Information System (HMIS) series publications. For each hazardous material used within the Navy, a Material Safety Data Sheet (MSDS) must be provided and available for review by users. Consult your local safety and health staff concerning any questions regarding hazardous materials, MSDS, personal protective equipment requirements, appropriate handling and emergency procedures, and disposal guidance.

Under the heading **HAZARDOUS MATERIALS WARNINGS**, complete warnings, including related icon(s) and a numeric identifier, are provided for hazardous materials used in this manual. Each hazardous material is assigned only one numeric identifier. Since only those hazardous materials addressed in this manual will be listed, the numeric identifiers may not appear in sequential order.

In the text of the manual, the caption **WARNING** is not used for hazardous material warnings. Hazards are cited with appropriate icon(s), the nomenclature of the hazardous material, and the numeric identifier that relates to the complete warning. Users of hazardous materials shall refer to the complete warnings, as necessary.

EXPLANATION OF HAZARDOUS MATERIALS ICONS

Biological

The abstract symbol bug shows that a material may contain bacteria or viruses that present a danger to life or health.

Chemical

The symbol of a drop of a liquid burning a hand shows a material that causes burns to human skin or tissue.

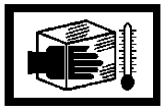

Cryogenic

The symbol of a hand in a block of ice shows that the material is extremely cold and can injure human skin or tissue.

Explosion

This rapidly expanding symbol shows that the material may explode if subjected to high temperature, sources of ignition, or high pressure.

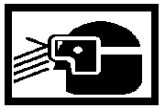

Eye Protection

The symbol of a person wearing goggles shows a material that can injure your eyes.

Fire

The symbol of a fire shows that a material can ignite and burn you.

Poison

The symbol of skull and crossbones shows that a material is poisonous or is a danger to life.

Radiation

The symbol of a human figure in a cloud shows that material vapors present a danger to life or health.

Vapor Hazard

The symbol of a human figure in a cloud shows that breathing this material can present a health hazard.

HAZARDOUS MATERIALS WARNINGS

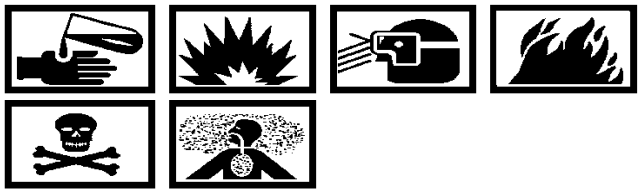

Carbon Removing Compound
MIL−C−25107 **1**

Carbon Removing Compound MIL−C−25107, is flammable, toxic and has harmful vapor. Keep container tightly closed when not in use. Keep away from heat, sparks and open flames. Use in well−ventilated area. Wear chemical splashproof goggles and gloves. Avoid contact with clothing, eyes and skin. Wash hands thoroughly with soap and water after use.

Lubricating Oil, MIL−PRF−23699 **2**

Lubricating Oil MIL−PRF−23699, if decomposed by heat, toxic gases are released. Prolonged contact with liquid or mist may cause dermatitis and irritation. The tri−cresyl−phosphate additive of synthetic oil conforming to Spec MIL−PRF−23699 is readily absorbed by the skin and is highly toxic. Any part of the body that comes in contact with the oil shall be cleaned immediately. In case of prolonged contact with skin, wash with soap and water. Remove saturated clothing. Eye contact: Flush with water immediately. Ingestion: Do not induce vomiting; get medical attention. When handling liquid, wear rubber gloves. If prolonged contact with mist is likely, wear approved respirator.

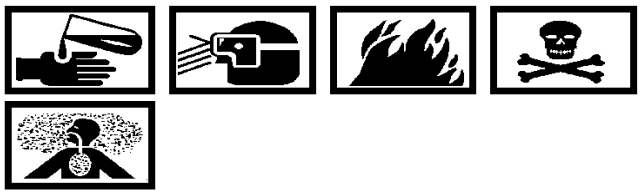

Dry Cleaning Solvent
MIL−PRF−680, Type II **3**

Dry Cleaning Solvent MIL−PRF−680, Type II, is flammable, toxic, a skin irritant and an inhalation hazard. Keep away from heat, sparks and open flames. Do not use synthetic cloth for wiping with dry cleaning solvent. Metal containers of solvent shall be grounded to prevent sparking and fires. Do not smoke, eat or drink when using solvent. Use in well−ventilated area. Avoid prolonged breathing of vapor and skin contact, which can cause dermatitis, irritated nose and throat and dizziness. Ingestion will cause gastrointestinal irritation. Wear approved gloves, goggles, coveralls and respirator. Inhalation: Remove to fresh air if vapor causes dizziness. Skin contact: Flush with water; remove solvent−saturated clothing. Get medical attention.

Dry Cleaning Solvent
Envirosolv CRX−2−5313 **4**

Dry Cleaning Solvent Envirosolv CRX−2−5313, is toxic, a skin irritant and an inhalation hazard. Keep away from heat, sparks and open flames. Do not smoke, eat or drink when using solvent. Use in well−ventilated area. Avoid prolonged breathing of vapor and skin contact. Skin contact may cause defatting and irritation of eyes, nose, throat and skin. Inhalation of high concentration of vapor may cause drowsiness and irritation of respiratory tract, which can cause dermatitis, irritated nose and throat and dizziness. Ingestion will cause gastrointestinal irritation. Wear approved gloves, goggles, coveralls and respirator. Inhalation: Remove to fresh air if vapor causes drowsiness. Skin contact: Flush with water; remove solvent−saturated clothing. Get medical attention.

Carbon Removing Compound P−C−111 **5**

Carbon Removing Compound P−C−111, is toxic and is harmful to skin and eyes. Store indoors or in area well protected against weather. Store below 27°C (80°F). Open cautiously to avoid injury. Avoid breathing vapor. Use in well−ventilated area. Keep away from heat, sparks or open flames. Wear splashproof goggles, solvent resistant gloves and coveralls. Eye contact: Flush with water; get medical attention.

Corrosion Preventative Compound MIL−C−6529 **6**

Corrosion Preventative Compound MIL−C−6529, is flammable, toxic and has harmful vapor. Keep container tightly closed when not in use. Keep away from heat, sparks and open flames. Use in well−ventilated area. Wear chemical splashproof goggles and gloves. Avoid contact with clothing, eyes and skin. Wash hands thoroughly with soap and water after use.

Lubricating Oil, MIL−PRF−6081, (Grade 1010) **7**

Lubricating Oil MIL−PRF−6081 Grade 1010, is flammable, toxic and an irritant. Keep away from heat, sparks and open flames. Use in well−ventilated area, especially when exposure to hot oil or mist is possible. Eye contact: Flush with water for 15 minutes; get medical attention. Skin contact: Wash with soap and water. Inhalation: Remove to fresh air; get medical attention. Ingestion: Do not induce vomiting; get medical attention. Wash hands with soap and water after use and before eating, drinking or smoking.

Paint Thinner TT−T−291 **8**

Paint Thinner TT−T−291, is toxic and combustible. Overexposure may produce headache, dizziness, nausea, and severe skin and eye irritation. Protection: Chemical splashproof goggles, gloves, and good ventilation. Keep container closed. Keep sparks, flames, and heat away. Keep off skin, eyes, and clothes. Do not breathe vapors. Respiratory protection may be required depending on work task(s) and location. Insure good personal hygiene prior to eating, drinking, or smoking.

Dry Cleaning Solvent MIL−M−7752 **9**

Dry Cleaning Solvent MIL−M−7752, is a high flash point dry cleaning solvent and is toxic, a skin irritant and an inhalation hazard. Keep away from heat, sparks and open flames. Do not smoke, eat or drink when using solvent. Use in well−ventilated area. Avoid prolonged breathing of vapor and skin contact. Skin contact may cause defatting and irritation of eyes, nose, throat and skin. Inhalation of high concentration of vapor may cause drowsiness and irritation of respiratory tract, which can cause dermatitis, irritated nose and throat and dizziness. Ingestion will cause gastrointestinal irritation. Wear approved gloves, goggles, coveralls and respirator. Inhalation: Remove to fresh air if vapor causes drowsiness. Skin contact: Flush with water; remove solvent−saturated clothing. Get medical attention.

Trichloroethane MIL−T−81533 **10**

Trichloroethane MIL−T−81533, is not flammable, but is corrosive to aluminum and magnesium in the presence of water, heat and small metallic particles such as vapor degreasers. Do not atomize. Use only as wipe or dip solvent in cold or ambient conditions or in authorized vapor degreasers. Use in well−ventilated area. Avoid breathing vapor and eye and skin contact. Eye or skin contact: Flush with water; get medical attention.

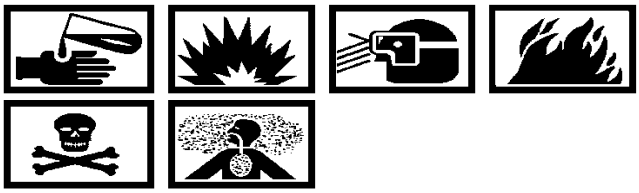

Actithane Paint WC 100 **11**

Actithane Paint WC 100, is flammable, toxic and an inhalation hazard. Keep away from heat, sparks and open flames. Wear goggles or face shield, air−supplied or cartridge respirator, rubber gloves and coveralls during all paint mixing and spraying operations. Avoid prolonged breathing of vapor. Prolonged or repeated skin contact can have a toxic effect on affected skin areas.

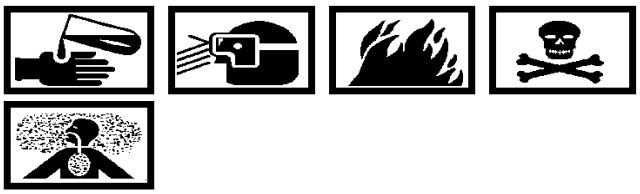

Deft Polyurethane Gray
03−GY−401 **12**

Deft Polyurethane Gray, 03−GY−401, is toxic and flammable. Flammable. Protection: Chemical splashproof goggles, gloves, and good ventilation. Keep container closed. Keep sparks, flames and heat away. Keep compound off skin, eyes, and clothes. Do not breathe vapors. Respiratory protection is required when using this material. Some colors may contain lead. Tyvek − type coveralls or other clothing shall be worn in lieu of street garments or uniforms. Symptoms of overexposure may include severe allergic or asthma−like responses. Prior to spraying, personnel should receive pre−placement isocyanate physicals. Insure good personal hygiene prior to eating, drinking, or smoking.

Magnesium Treatment (Chrome Pickle)
MIL−M−3171, Type III (Dow 19) **13**

Magnesium Treatment (Chrome Pickle) MIL−M−3171, Type III (Dow 19), is a strong oxidizer which supports combustion to skin, eyes and mucous membranes. It can also cause irritation and ulcers of the nasal septum as well as irritation and damage to the respiratory system. Wear neoprene gloves, chemical goggles and rubber apron during magnesium treatment operation. Wear respirator when handling the material in powder form and during spraying operations.

Silicone Resin R−671 **14**

Silicone Resin R−671, is toxic and is an inhalation hazard. Avoid prolonged breathing of vapor. Excessive or repeated skin contact can cause toxic effects, dermatitis and eye and throat irritation. Skin or eye contact: Flush with water. Inhalation: Remove to fresh air if vapor causes dizziness.

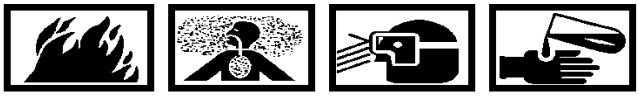

Alodine Solution No. 1201
MIL−C−81706 **15**

Alodine Solution No. 1201 MIL−C−81706 is highly reactive, do not mix with oxidizable materials such as cloth, paper, and wood. When mixing solutions, add acid to water, not water to acid. Contact with powder can cause severe skin and eye irritation, and skin ulcers. Inhalation or ingestion can result in nasal and kidney damage. If any liquid or powder contacts skin or eyes, immediately flush area thoroughly with water. Immediately change any contaminated clothing. If skin disorders appear, get medical attention. When handling powder at air−exhausted workbench or tank, wear approved gloves and apron. When handling or mixing it into solution at unexhausted workbench, wear approved respirator, gloves, and apron. Do not eat, smoke, or carry smoking materials in areas where powder is handled. Contains chromates. Follow approved toxic waste disposal procedures.

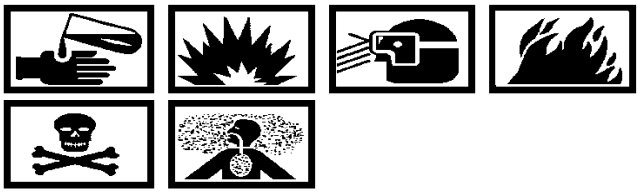

Polyamide Epoxy Primer MIL−P−23377 **16**

Polyamide Epoxy Primer MIL−P−23377, is toxic and flammable. Contains chromium compounds which may cause cancer and is irritating to eyes and skin. Overexposure may cause lightheadedness, nausea, narcosis, etc. Protection: Chemical splashproof goggles, gloves, and good ventilation (or respirator). Keep container closed. Keep sparks, flames and heat away. Keep primer off skin, eyes and clothes. Do not breathe vapors. Insure good personal hygiene prior to eating, drinking, or smoking.

Chromic Acid O−C−303 **17**

Chromic Acid O−C−303, is highly reactive − do not mix with combustible organics or other oxidizable materials such as wood, paper and cloth. When heated, toxic gases are released. Contact of skin with liquid or inhalation of mist can cause severe burns, respiratory tract irritation and chronic bronchitis. When handling solution or concentrated liquid in open tank, wear approved respirator, full−body clothing, gloves and goggles.

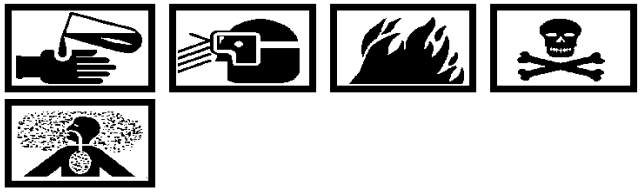

Fluorescent Penetrant ZA−43 18

Fluorescent Penetrant ZA−43, is flammable, toxic and an irritant. Keep away from heat, sparks and open flames. Use in well−ventilated area. Eye contact: Flush with cold water; get medical attention. Skin contact: Wash with soap and water. Inhalation: Remove to fresh air; get medical attention. Ingestion: Do not induce vomiting; get medical attention. Wash hands with soap and water after use and before eating, drinking or smoking.

Molybdenum Disulfide Lubricant MIL−M−7866 19

Molybdenum Disulfide Lubricant MIL−M−7866, is toxic and an irritant. Avoid skin and eye contact, do not breathe dust or swallow. Eye contact: Flush with water for 15 minutes; get medical attention. Inhalation: Remove to fresh air; get medical attention. Skin contact: Wash with soap and water, remove contaminated clothing; get medical attention if irritation persists. Ingestion: Do not induce vomiting; get medical attention. Wash hands with soap and water after use and before eating, drinking or smoking.

General Purpose Grease MIL−PRF−23827 20

General Purpose Grease MIL−PRF−23827, is toxic and is an irritant to the eyes and skin. Protection: Safety glasses, oil−resistant gloves, and good ventilation. Keep sparks, flames, and heat away. Keep off skin, eyes, and clothes. Do not breathe vapors. Insure good personal hygiene prior to eating, drinking, or smoking.

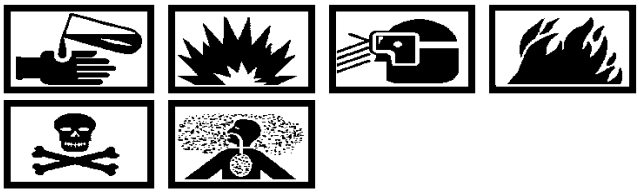

Zinc Chromate Primer TT−P−1757 21

Zinc Chromate Primer TT−P−1757, is flammable, toxic and an inhalation hazard. Keep away from heat, sparks and open flames. Wear goggles or face shield, air−supplied or cartridge respirator, rubber gloves and coveralls during all primer mixing and spraying operations. Primer contains zinc chromate corrosion inhibiting pigments. Airborne mist is toxic. Avoid prolonged breathing of vapor. Prolonged or repeated skin contact can have a toxic effect on affected skin areas.

Corrosion Preventative Compound MIL−C−16173 Grade 1 22

Corrosion Preventative Compound MIL−C−16173 Grade 1, is flammable, toxic and has harmful vapor. Keep container tightly closed when not in use. Keep away from heat, sparks and open flames. Use in well−ventilated area. Wear chemical splashproof goggles and gloves. Avoid contact with clothing, eyes and skin. Wash hands thoroughly with soap and water after use.

Dry Nitrogen BB−N−411 Type I Grade A or B Class 1 23

Dry Nitrogen BB−N−411 Type I Grade A or B Class 1, can displace air, causing asphyxiation, and pressurized nitrogen can accelerate particles which can cause injury if they strike eyes. Use in well−ventilated area. Wear eye protection if nitrogen is under pressure.

Denatured Ethyl Alcohol MIL−A−6091 24

Denatured Ethyl Alcohol MIL−A−6091, is flammable and toxic. Avoid breathing vapor. Use in well−ventilated area. Keep away from heat, sparks or open flames. Wear splashproof goggles, solvent resistant gloves and other protective gear. Eye contact: Flush with water; get medical attention.

Hydraulic Fluid MIL−H−83282 25

Hydraulic Fluid MIL−H−83282, is toxic. Protection: Chemical splashproof goggles and gloves. Keep fluid off skin, eyes and clothes. Wear gloves and oil−impervious apron when feasible. Wash affected area, change clothing if applicable. Avoid prolonged skin exposure. Insure good personal hygiene prior to eating, drinking, or smoking.

Cleaning Compound B And B 3100 26

Cleaning Compound B And B 3100, is a petroleum distillate containing aromatic and aliphatic hydrocarbons. It is combustible and an inhalation hazard. Keep away from heat, sparks and open flames. Avoid prolonged breathing of vapor and contact with skin because it can cause dermatitis, irritated nose and throat and dizziness. Wear approved gloves and goggles.

Methyl Ethyl Ketone TT−M−261 27

Methyl Ethyl Ketone TT−M−261, is toxic, flammable, and irritating to eyes and skin. May cause dizziness, narcosis, nausea and vomiting (overexposure). Do not use in confined areas. Protection: Chemical splashproof goggles, gloves, and good ventilation. Keep container closed. Keep sparks, flames, and heat away. Keep MIBK off skin, eyes, and clothes. Do not breathe vapors. Use of respiratory protection may be required, depending on work task(s) and location. Insure good personal hygiene prior to eating, drinking, or smoking.

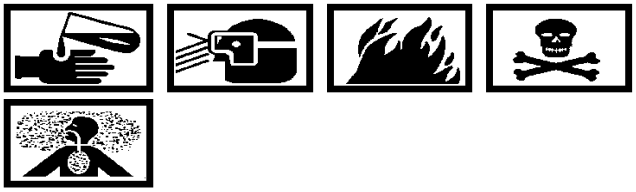

RTV Silicone Rubber RTV−732 28

Silicone Rubber RTV 732, vapor released during curing is combustible. Do not use near open flames, near welding areas, or on hot surfaces. Vapor is corrosive. Contact of vapor with skin or eyes will cause burns. Inhalation of vapor may cause severe nose and throat irritation; repeated inhalation may result in chronic bronchitis. If any vapor contacts skin or eyes, immediately flush affected area thoroughly with water. If vapors cause irritation, go to fresh air. Get medical attention. When mixing uncured rubber, and during curing of rubber wear approved respirator, gloves, and goggles or face shield.

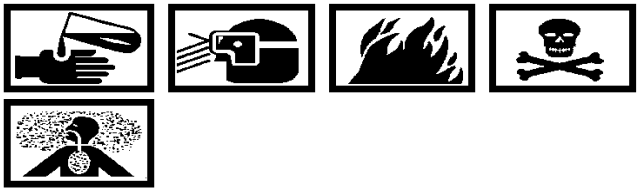

Silicone Rubber Adhesive GE−102 29

Silicone Rubber GE−102, vapor released during curing is combustible. Do not use near open flames, near welding areas, or on hot surfaces. Vapor is corrosive. Contact of vapor with skin or eyes will cause burns. Inhalation of vapor may cause severe nose and throat irritation; repeated inhalation may result in chronic bronchitis. If any vapor contacts skin or eyes, immediately flush affected area thoroughly with water. If vapors cause irritation, go to fresh air. Get medical attention. When mixing uncured rubber, and during curing of rubber wear approved respirator, gloves, and goggles or face shield.

Chemical Conversion Coating MIL−C−5541 **30**

Chemical Conversion Coating MIL−C−5541, is toxic and flammable. Avoid contact with skin and eyes. Avoid breathing vapors; upper respiratory tract irritation or damage may occur. May be harmful or fatal if swallowed. Contains chromic acid, a systemic poison and may aggravate pre−existing conditions. Wash hands and face with soap and water after use and before smoking or eating. Immediately remove contaminated clothing and launder before re−use. Avoid humidity, strong acids, alkalis, reducing compounds, flammable or combustible material. Store in a dry area in tightly closed containers. Store away form oils, greases, and corrosives. When mixing; add slowly to water while mixing. Protection: rubber gloves, chemical goggles, faceshield, and laboratory apron; respirator with acid/organic vapor cartridge and mist prefilter is required during spray operations or in poorly ventilated areas.

Anti−seize Compound (Never Seez) NS165 **31**

Anti−seize Compound (Never Seez) NS165, is somewhat flammable, toxic and an irritant. Keep away from heat, sparks and open flames. Use in well−ventilated area. Eye contact: Flush with water; get medical attention. Skin contact: Wash with soap and water. Ingestion: Do not induce vomiting; get medical attention. Wash hands with soap and water after use and before eating, drinking or smoking.

Petrolatum VV−P−236 **32**

Petrolatum VV−P−236, is toxic and heated can emit harmful fumes. Avoid contact with skin, eyes and clothing. Wash hands with soap and water after use.

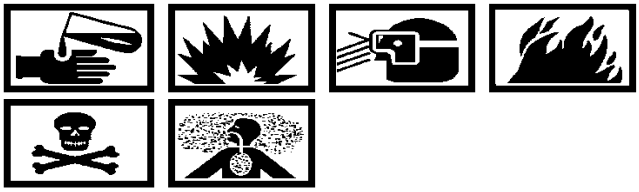

Sealing Compound Permatex 1372 or Loctite 30588 **33**

Sealing Compound Permatex 1372 or Loctite 30588, is flammable and toxic. Keep product and its vapor away from heat, sparks and open flames. Use in well−ventilated area. Avoid prolonged breathing of vapor. Avoid contact with eyes and skin. Keep container tightly closed when not in use.

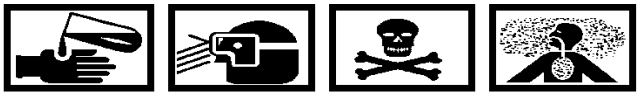

Epoxy Resin Armstrong A **34**

Epoxy Resin Armstrong A, is a skin, eye and respiratory tract irritant. When heated, toxic gases are released. Cure mixture in an exhausted oven. Material is a strong irritant. Prolonged or repeated contact with material can cause skin irritation. Wear approved gloves and goggles (or face shield) when handling material. If there is prolonged contact with skin, wash contacted area with soap and water. If liquid contacts eyes, flush eyes with water immediately. Inhalation of vapors can cause irritation to the respiratory system. If vapors cause irritation, go to fresh air. If prolonged contact with vapor is likely, wear approved respirator or work at/on exhausted workbench.

Epoxy Resin Armstrong A−2 35

Epoxy Resin Armstrong A−2, may cause skin sensitization or other allergic reaction. Use in well−ventilated area. Use personal protective equipment. Skin contact: Wash immediately with soap and water. Get medical attention for any eye or internal contact.

Methyl Ethyl Ketone MIL−M−13999 36

Methyl Ethyl Ketone MIL−M−13999, is flammable and toxic. Keep away from heat, sparks and open flames. Use in well−ventilated area. Wear splashproof goggles, solvent resistant gloves and coveralls. Eye contact: Flush with water; get medical attention.

General Purpose Aircraft Grease MIL−PRF−81322 37

General Purpose Aircraft Grease MIL−PRF−81322, is combustible. It is an eye irritant and upon prolonged exposure, a skin irritant. Keep away from flames, high temperatures and oxidizing agents. Store in a cool dry place. Protection: Neoprene gloves, and chemical goggles. Insure good personal hygiene prior to eating, drinking, or smoking.

Polyurethane Coating MIL−C−81773 38

Polyurethane Coating MIL−C−81773, is toxic and flammable. Flammable. Protection: Chemical splashproof goggles, gloves, and good ventilation. Keep container closed. Keep sparks, flames and heat away. Keep compound off skin, eyes, and clothes. Do not breathe vapors. Respiratory protection is required when using this material. Some colors may contain lead. Tyvek − type coveralls or other clothing shall be worn in lieu of street garments or uniforms. Symptoms of overexposure may include severe allergic or asthma−like responses. Prior to spraying, personnel should receive pre−placement isocyanate physicals. Insure good personal hygiene prior to eating, drinking, or smoking.

Resin Coating Thinner MIL−PRF−3043 39

Resin Coating Thinner MIL−PRF−3043, is flammable and toxic. Keep away from heat, sparks and open flames. Use in well−ventilated area. Wear solvent−resistant gloves, splashproof goggles and coveralls. Eye contact: Flush with water; get medical attention.

Sealing Compound PL32M Hylomar 40

Sealing Compound PL32M Hylomar, is flammable and toxic. Keep product and its vapor away from heat, sparks and open flames. Use in well−ventilated area. Avoid prolonged breathing of vapor. Avoid contact with eyes and skin. Keep container tightly closed when not in use.

Dry Cleaning Solvent MIL−C−5546 41

Dry Cleaning Solvent MIL−C−5546, is a high flash point dry cleaning solvent and is toxic, a skin irritant and an inhalation hazard. Keep away from heat, sparks and open flames. Do not smoke, eat or drink when using solvent. Use in well−ventilated area. Avoid prolonged breathing of vapor and skin contact. Skin contact may cause defatting and irritation of eyes, nose, throat and skin. Inhalation of high concentration of vapor may cause drowsiness and irritation of respiratory tract, which can cause dermatitis, irritated nose and throat and dizziness. Ingestion will cause gastrointestinal irritation. Wear approved gloves, goggles, coveralls and respirator. Inhalation: Remove to fresh air if vapor causes drowsiness. Skin contact: Flush with water; remove solvent−saturated clothing. Get medical attention.

Paint Thinner Actithane H 251 **42**

Paint Thinner Actithane H 251, is toxic and combustible. Overexposure may produce headache, dizziness, nausea, and severe skin and eye irritation. Protection: Chemical splashproof goggles, gloves, and good ventilation. Keep container closed. Keep sparks, flames, and heat away. Keep off skin, eyes, and clothes. Do not breathe vapors. Respiratory protection may be required depending on work task(s) and location. Insure good personal hygiene prior to eating, drinking, or smoking.

Chemical Conversion Coating
MIL−C−81706 (1) Type I Class A **43**

Chemical Conversion Coating MIL−C−81706 (1) Type I Class A, is a strong oxidizer which supports combustion to skin, eyes and mucous membranes. It can also cause irritation and ulcers of the nasal septum as well as irritation and damage to the respiratory system. Wear neoprene gloves, chemical goggles and rubber apron during conversion coating operation. Wear respirator when handling the material in powder form and during spraying operation.

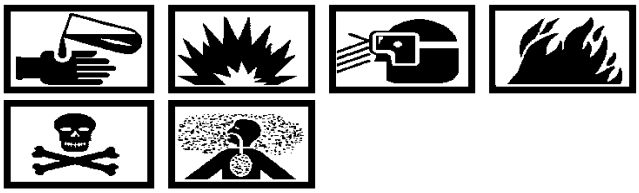

Sealing Compound, Buna−N
MIL−S−4383 **44**

Sealing Compound, Buna−N, MIL−S−4383, is flammable and toxic. Keep product and its vapor away from heat, sparks and open flames. Use in well−ventilated area. Avoid prolonged breathing of vapor. Avoid contact with eyes and skin. Keep container tightly closed when not in use.

Antiseize TT−S−1732 **45**

Antiseize TT−S−1732, is somewhat flammable, toxic and an irritant. Keep away from heat, sparks and open flames. Use in well−ventilated area. Eye contact: Flush with water; get medical attention. Skin contact: Wash with soap and water. Ingestion: Do not induce vomiting; get medical attention. Wash hands with soap and water after use and before eating, drinking or smoking.

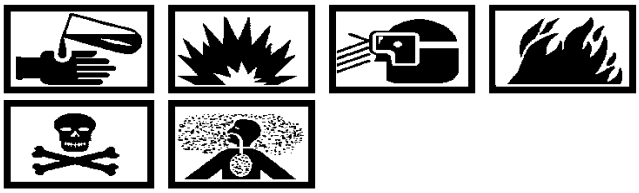

Silicone Enamel Lankote 620 **46**

Silicone Enamel Lankote 620, is flammable, toxic and an inhalation hazard. Keep away from heat, sparks and open flames. Wear goggles or face shield, air−supplied or cartridge respirator, rubber gloves and coveralls during all paint mixing and spraying operations. Avoid prolonged breathing of vapor. Prolonged or repeated skin contact can have a toxic effect on affected skin areas.

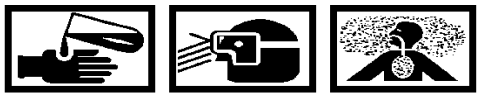

Ultrachem Assembly Fluid **47**

Ultrachem Assembly Fluid, is non−toxic and non−flammable. May cause skin irritation seen as local redness and/or burns. May cause eye irritation seen as excess redness of the conjunctive and/or burns. Avoid contact with skin and eyes. Avoid inhaling vapors, may cause irritation of the nose and throat, accompanied by cough and chest discomfort. Keep containers closed when not in use. Protection: Chemical splashproof goggles, gloves, and good ventilation. Wash hands thoroughly with soap and water prior to eating, drinking, or smoking.

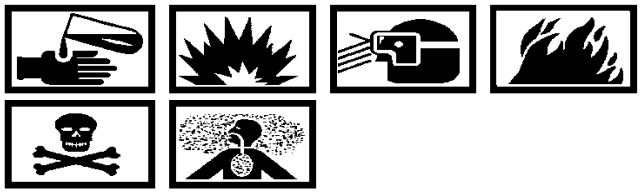

Lacquer Krylon No. 1303 **48**

Lacquer Krylon No. 1303, is toxic and flammable. It is irritating to eyes and skin. Overexposure may cause lightheadedness, nausea, and narcosis. Protection: Chemical splashproof goggles, gloves, and good ventilation (or respirator). Keep container closed. Keep sparks, flames, and heat away. Keep off skin, eyes, and clothes. Do not use in enclosed or confined spaces. Do not breathe vapors. Insure good personal hygiene prior to eating, drinking, or smoking.

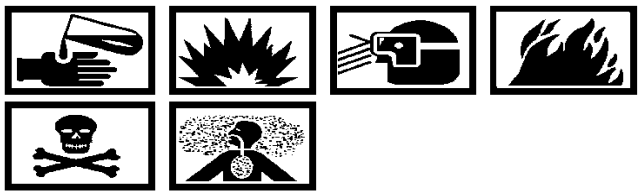

Sealant R52C3395 **49**

Sealant R52C3395, is toxic and flammable. Keep away from heat, sparks and open flames. Use in well−ventilated area. Avoid prolonged breathing of vapor and eye and skin contact. Keep container tightly closed when not in use.

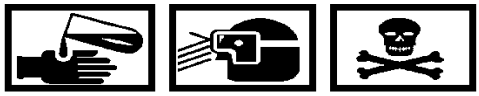

Loctite No. 79 MIL−S−22473 Grade AA **50**

Loctite No. 79 MIL−S−22473 Grade AA, excessive or repeated skin contact with anaerobic adhesive may cause skin irritation in sensitive persons. In case of contact with sensitive skin, remove promptly by washing with soap and water. If skin reaction persists, get medical attention. In case of eye contact with retaining compounds, flush with water for 15 minutes and get medical attention.

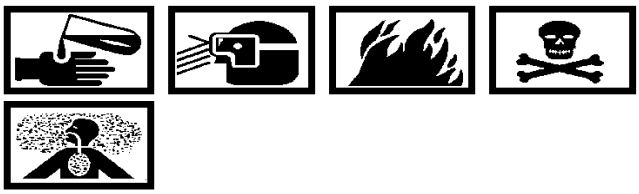

Penetrating Oil A−A−50493 **51**

Penetrating Oil A−A−50493, is flammable, toxic and an irritant. Avoid breathing vapor or mist. Avoid contact with skin and eyes. Eye contact: Flush with cold water; get medical attention. Skin contact: Wash with soap and water. Inhalation: Remove to fresh air; get medical attention. Ingestion: Do not induce vomiting; get medical attention. Wash hands with soap and water after use and before eating, drinking or smoking.

High Temperature Lubricating Grease MIL−L−15719 **52**

High Temperature Lubricating Grease MIL−L−15719, is toxic and when heated can emit harmful fumes. Avoid contact with skin, eyes and clothing. Wash hands with soap and water after use.

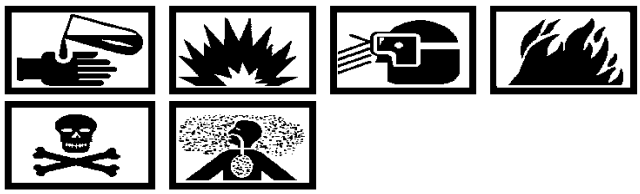

Aviation Turbine Fuel MIL−T−5624 (Grade JP−4, JP−5) **53**

Aviation Turbine Fuel MIL−T−5624 (Grade JP−4, JP−5) MIL−T−83133A (Grade JP−8), is flammable, toxic and an irritant. Vapor can form explosive mixture with air. Keep away from heat, sparks and open flames. Dispose of saturated rags or paper properly to avoid spontaneous combustion. Use in well−ventilated area. Ingestion: Do not induce vomiting; get medical attention. Eye contact: Flush with water; get medical attention. Skin contact: Wash with soap and water. Remove clothing wet with aviation turbine fuel and launder before reuse. Inhalation: Remove to fresh air; get medical attention. Wash hands with soap and water after use and before eating, drinking or smoking.

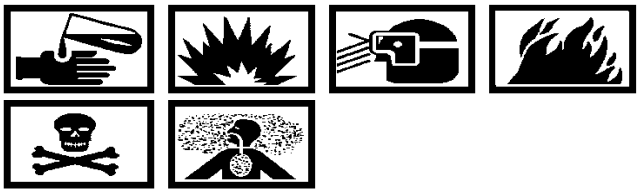

Alseal 500 **54**

Alseal 500, is flammable, toxic and an inhalation hazard. Keep away from heat, sparks and open flames. Wear goggles or face shield, air−supplied or cartridge respirator, rubber gloves and coveralls during all primer mixing and spraying operations. Primer contains zinc chromate corrosion inhibiting pigments. Airborne mist is toxic. Avoid prolonged breathing of vapor. Prolonged or repeated skin contact can have a toxic effect on affected skin areas.

Dry Ice, BB−C−104 **55**

Solid Carbon Dioxide, BB−C−104 (Dry Ice), can cause frostbite and blistering upon contact with skin or eyes, and severe internal injury if ingested. Dry ice evaporates to form carbon dioxide gas which can displace air, causing asphyxiation. Use in well−ventilated area or wear self−contained respirator. Wear splashproof goggles and approved insulating gloves. Skin or eye contact: Get medical attention.

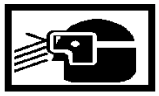

Compressed Air **56**

Compressed Air, used for any cleaning or drying operation, do not exceed 30 psig at the nozzle. Eyes can be permanently damaged by contact with liquid or large particles propelled by compressed air. Inhalation of air blown particles or solvent vapor can damage lungs. When using air for drying or cleaning at an air−exhausted workbench, wear approved goggles or face shield. When using air for drying or cleaning at an unexhausted workbench, wear approved respirator and goggles.

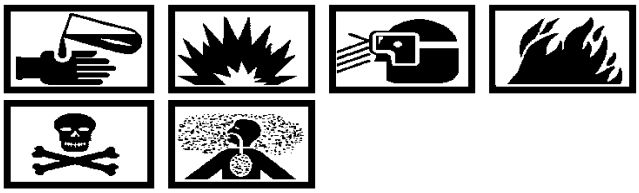

Calibrating Fluid MIL−C−7024, Type II **57**

Calibrating Fluid MIL−C−7024 Type II, is combustible do not use near open flames, near welding areas, or on hot surfaces. Prolonged contact with skin may cause irritation. Prolonged inhalation of vapor can cause dizziness, headache, and intoxication. If there is any prolonged contact with skin, wash affected area with soap and water. If liquid contacts eyes, flush eyes thoroughly with water. Remove solvent−saturated clothing. If vapors cause light−headedness, go to fresh air. If liquid is swallowed, do not try to vomit. Get medical attention. When handling or when applying liquid at an air−exhausted workbench, wear approved gloves. When handling or when applying liquid at an unexhausted workbench, wear approved gloves and goggles. Dispose of liquid−soaked rags in approved metal container.

Methyl Alcohol O−M−232 **58**

Methyl Alcohol O−M−232, is highly flammable and toxic. Avoid breathing vapor. Use in well−ventilated area. Keep away from heat, sparks or open flames. Eye contact: Flush with water; get medical attention.

Compound, thread, anti−seize MIL−A−907 **59**

Compound, thread, Anti−seize MIL−A−907, is somewhat flammable, toxic and an eye irritant. Keep away from heat, sparks and open flames. Use in well−ventilated area. Eye contact: Flush with water; get medical attention. Skin contact: Wash with soap and water. Ingestion: Do not induce vomiting; get medical attention. Wash hands with soap and water after use and before eating, drinking or smoking.

Sodium Hydroxide O−S−598 **60**

Sodium Hydroxide O−S−598, causes severe burns; do not get in eyes, on skin, or on clothing. Wear gloves and goggles or face shield when handling.

Acetone O−A−51 **61**

Acetone O−A−51 is flammable do not use near open flames, near welding areas, or on hot surfaces. Do not smoke while using it, and do not use it where others are smoking. Prolonged inhalation of vapor can irritate eyes and mucous membranes and can cause dizziness, and headache. If any liquid contacts skin immediately remove solvent−saturated clothing. If vapors cause drowsiness, go to fresh air. When handling large quantities of liquid (more than a gallon), use at air exhausted workbench. Wear approved gloves. Store solvent and dispose of liquid−soaked rags in approved metal safety container. Metal containers of solvent must be grounded to maintain electrical continuity.

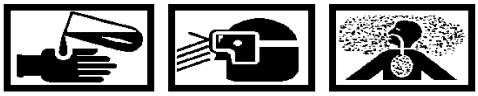

Nitric Acid O−N−350 **62**

Nitric Acid O−N−350, is highly reactive, do not mix with combustible organics or other oxidizable materials such as wood, paper, and cloth. When heated, toxic gases are released. When mixing solutions, add acid to water, not water to acid. Contact of skin with liquid or inhalation of mist can cause severe burns, respiratory tract irritation, and chronic bronchitis. If any solution, liquid, or mist contacts skin or eyes, flush affected area thoroughly with water. Immediately change any contaminated clothing. If mist is inhaled, go to fresh air. Immediately get medical help. If handling solution or concentrated liquid in air-exhausted covered tank, wear approved gloves and apron, and wear goggles or face shield. When handling solution or concentrated liquid in open tank, wear approved respirator, full-body clothing, gloves, and goggles.

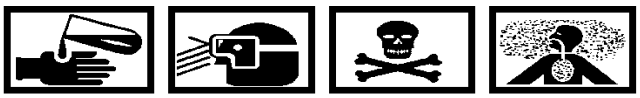

Carbon Remover Compound MIL−C−19853 **63**

Carbon Remover Compound MIL−C−19853, is toxic and is harmful to skin and eyes. Store indoors or in area well protected against weather. Store below 27°C (80°F). Open cautiously to avoid injury. Avoid breathing vapor. Use in well−ventilated area. Keep away from heat, sparks or open flames. Wear splashproof goggles, solvent resistant gloves and coveralls. Eye contact: Flush with water; get medical attention.

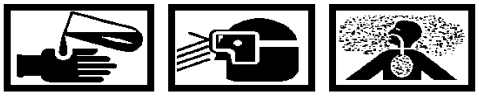

Tetrachloroethylene O−T−236 **64**

Tetrachloroethylene O−T−236, repeated or prolonged contact with liquid or inhalation of vapor can cause skin and eye irritation, dermatitis, narcotic effects, and liver and kidney damage. After prolonged skin contact, wash contacted area with soap and water. Remove contaminated clothing. If vapors cause irritation, go to fresh air. For prolonged over-exposure, get medical help. When handling liquid in vapor-degreasing tank with hinged cover and air exhaust, or at air-exhausted workbench, wear approved gloves and goggles to prevent contact with liquid. When handling liquid at open, unexhausted workbench, wear approved respirator, gloves, and goggles. Dispose of liquid-soaked rags in approved metal container.

Denatured Alcohol (Ethanol) O−E−760 **65**

Denatured Alcohol (Ethanol) O−E−760, Type III, is poisonous, flammable, harmful to eyes, skin, and breathing passages. Keep ignition sources away, provide adequate ventilation and wear protective clothing.

Preservative Oil VV−L−800 **66**

Preservative Oil VV−L−800, is toxic. Avoid breathing vapor or mist. Use in well−ventilated area. Wear chemical splashproof goggles and gloves. Wash hands with soap and water after use.

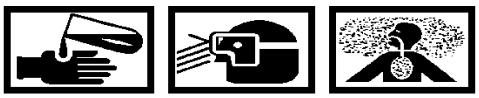

Dry Film Lubricant Molykote 321 **67**

Dry Film Lubricant Molykote 321, handling solid at air-exhausted workbench, wear approved gloves. When handling solid at unexhausted workbench, wear approved respirator and gloves.

DEPOT MAINTENANCE

ALPHABETICAL INDEX

Title	WP Number
Accessory Drive Housing Assembly	034 00
Assembly	034 00
Filter Bypass Valve Test	034 00
Accessory Drive Housing Assembly	067 00
Inspection	067 00
Repair	067 00
Lockwire Holes, Mounting Pad, and Mounting Stud Holes Bosses	067 00
Mounting Stud Holes Bosses Repair (Alternate Procedure)	067 00
External Oil Scavenge Pump Mounting Surface and Bore Repair	067 00
External Scavenge Oil Tube Union Thread Repair (P/N 23008237 housing only)	067 00
Filter Bypass Valve Installation and Testing	067 00
Fuel Pump Mounting Pad Repair	067 00
Speed Sensitive Valve Mounting Pad Repair	067 00
Accessory Drive Shafts and Small Gears	046 00
Inspection	046 00
Repair	046 00
Accessories Overhaul − List of Separate Manuals	006 00
Actuator Rod, Reverse (Negative) Torque Switch	059 00
Conical Tip Wear Repair	059 00
Inspection and Repair	059 00

Title	WP Number
Air Hose Assemblies	135 00
Cleaning	135 00
Inspection	135 00
Installation	135 00
Repair	135 00
Test Requirements	135 00
Air Inlet Housing Assembly	068 00
Anti−icing Air Passages Rework	068 00
Anti−icing Valve Mounting Pad Repair	068 00
Anti−icing Valve Mounting Pad Rework	068 00
Crack Repair	068 00
Inlet Vane O−ring Seal Groove Repair	068 00
Inspection	068 00
Metallizing of Extension Shaft Housing Bore	068 00
Mounting Pad Bores Repair	068 00
Pilot Lip or Ring Replacement	068 00
Pressure Test	068 00
Repair	068 00
Rework	068 00
Temperature Probe Assembly Pad Bore Rework	068 00
Strut Corrosion Repair	068 00
Strut Repair (Excluding Corrosion Damage)	068 00
Surface Refinishing	068 00
Anti−Friction Bearings	138 00
Cleaning	138 00
Copper Plated Bearing Inner Ring Repair	138 00
Demagnetization	138 00
Inspection	138 00
Internal Clearance Limits	138 00
Compressor Extension Shaft Bearing	138 00
Compressor Front Bearing	138 00
Compressor Rear Bearing	138 00
Main Drive Gear Bearing	138 00
Pinion Gear Front Bearing	138 00
Pinion Gear Rear Bearing	138 00
Planet Gear and Bearing Assembly	138 00
Propeller Shaft Bearing	138 00

Title	WP Number
Rear Carrier Bearing	138 00
Torquemeter Mid−Bearing	138 00
Turbine Front Bearing	138 00
Turbine Rear Bearing	138 00
Internal Diametral Clearance Measurement	138 00
Removal and Disassembly	138 00
Separator Wear	138 00
Visual Inspection, Definitions, and Limits	138 00
Anti−Icing Air Valve	122 00
Assembly	122 00
Cleaning	122 00
Disassembly	122 00
Inspection	122 00
Testing	122 00
Bearing Cage	011 00
Housing Bore Metal Spray Repair	011 00
Inspection	011 00
Repair	011 00
Replacement	011 00
Bearing Journal	012 00
Repair	012 00
Bearings, Linkage Rod−End	139 00
Cleaning	139 00
Inspection	139 00
Lubrication	139 00
Bearing Lock Tube	063 00
Inspection and Repair	063 00
Bearing Outer Ring Lock Key	063 00
Inspection and Repair	063 00
Bleed Air Collectors	072 00
Inspection	072 00
Repair	072 00

Title	WP Number
Bolt, Special Muted Machine	057 00
Bonded Rubber Mute Replacement	057 00
Inspection and Repair	057 00
Burner Drain Valve	119 00
Assembly	119 00
Disassembly	119 00
Inspection and Repair	119 00
Testing	119 00
Bushing	014 00
Replacement	014 00
Carrier Oil Delivery Flange Assembly	054 00
Bushing Replacement	054 00
Inspection	054 00
Repair	054 00
Carrier Oil Lube Tube	055 00
Inspection and Repair	055 00
Pilot Journal Wear and Scoring Repair	055 00
Cleaning	055 00
Carrier Rear Bearing Retaining Segment Plates and Keyed Segment Plate	039 00
Inspection	039 00
Repair	039 00
Chrome Plate Repair	039 00
Check Valve	123 00
Assembly	123 00
Cleaning	123 00
Disassembly	123 00
Inspection	123 00
Testing	123 00
Cleaning Procedures	008 00
Combustion Liner Assembly and Crossover Tube Cleaning	008 00
Compressor Assembly	008 00
Case Assembly Cleaning (Alternate Method)	008 00

Title	WP Number
Case Cleaning	008 00
Diffuser Cleaning	008 00
Rotor Assembly Cleaning	008 00
Rotor Assembly Tie Bolt Cleaning	008 00
Vane Assembly Cleaning	008 00
Wheel and Blade Cleaning	008 00
Wheel Spacer Cleaning	008 00
Turbine Assembly	008 00
Blade and Vane Cleaning	008 00
Clamp Bolt and Nut Cleaning	008 00
Cleaning Blades without Alpak Coating	008 00
Inlet Casing, Rear Bearing Support, and Vane Case Cleaning	008 00
Wheel and Blade Assembly Cleaning	008 00
Wheel Cleaning	008 00
Wheel Spacer Cleaning	008 00
Torquemeter Assembly	008 00
Inner and Outer Shaft and Safety Coupling Cleaning	008 00
Coil Springs	140 00
Testing	140 00
Combustion Chamber Inner Casing	090 00
Inspection	090 00
Repair	090 00
Combustion Chamber Inner Casing Liner	091 00
Body and Flange Crack Weld Repair	091 00
Body Weld Repair	091 00
Flange Weld Repair	091 00
Inspection	091 00
Pressure Testing	091 00
Repair	091 00
Combustion Chamber Outer Casing	087 00
Crack Repair	087 00
Inspection	087 00
Repair	087 00
Tapped Hole Repair	087 00
Weld Repair (Titanium)	087 00

Title	WP Number
Combustion Liner Assemblies	088 00
Fuel Nozzle Ferrule Replacement	088 00
Igniter Ferrule Replacement	088 00
Inspection	088 00
Repair	088 00
Weld Repair	088 00
Combustion Liner Support and Crossover Tubes	089 00
Combustion Liner Support and Crossover Tubes Weld Repair	089 00
Inspection	089 00
Repair	089 00
Components Covered in Separate Publications	006 00
Component Marking and Time Coding	007 00
Compressor Air Inlet Vane Assembly	070 00
Inspection	070 00
Loose Vane Repair	070 00
Repair	070 00
Vane Slot Repair	070 00
Compressor Bleed Air Filter	131 00
Assembly	131 00
Cleaning	131 00
Disassembly	131 00
Inspection	131 00
Testing	131 00
Compressor Bleed Air Valves	120 00
Assembly	120 00
Cleaning	120 00
Disassembly	120 00
Inspection and Repair	120 00
Testing	120 00

Title	WP Number
Compressor Case	071 00
Front Flange Face Repair	071 00
Inspection	071 00
Machining	071 00
Pilot Diameter Repair	071 00
Post Machining Measurement	071 00
Recoating	071 00
Coating Application	071 00
Surface Preparation	071 00
Repair	071 00
Compressor Case and Vane Assembly	027 00
Disassembly	027 00
Compressor Case and Vane Assembly	028 00
Assembly	028 00
Compressor Diffuser Assembly	081 00
Alseal No. 585 Application	081 00
Bleed Port and Oil Tube Attaching Weld Repair	081 00
Combustion Inner Casing Sleeve Replacement	081 00
Dimensional Inspection	081 00
Front Baffle Installation	081 00
Front Ring and Baffle Installation	081 00
Front Ring and Baffle Machining	081 00
Inspection	081 00
Nickel−Cadmium Plating Stripping	081 00
Oil Tube Weld Repair	081 00
Pressure and Scavenge Oil Tubes and Vent Tube Repair	081 00
Pressure and Scavenge Oil Tubes Replacement	081 00
Pressure Test	081 00
Repair	081 00
Repair Weld Shot Peening Procedure	081 00
Scavenge Oil Drain Pad and Drain Tube Pad Weld Repair	081 00
Stress Relief Procedure	081 00
Sump Scavenge Oil Tube Replacement	081 00
Weld and Crack Repair	081 00
Weld Repair Access Improvements	081 00

Title	WP Number
Compressor Extension Shaft and Housing	077 00
Inspection	077 00
Repair	077 00
OD Repair	077 00
Rear Face and OD Combined Repair	077 00
Rear Face Repair	077 00
Compressor Front Bearing Oil Jet	083 00
Inspection	083 00
Repair	083 00
Compressor Front Labyrinth Seal Assembly	069 00
Babbitt Lining Replacement	069 00
Inspection	069 00
Repair	069 00
Compressor Rear Bearing Labyrinth Seat	082 00
Chrome Plating	082 00
Inspection	082 00
Repair	082 00
Compressor Rear Bearing Oil Jet	083 00
Diameter B Repair	083 00
Inspection	083 00
Repair	083 00
Compressor Rotor Assembly	025 00
Disassembly	025 00
Compressor Rotor Assembly	026 00
Assembly	026 00
Blade Identification	026 00
Blade Installation	026 00
Dynamic Balancing	026 00
Final Grinding	026 00
Inspection	026 00
Wheel Assembly Static Balance	026 00

Title	WP Number
Compressor Rotor Blades	075 00
Inspection	075 00
Repair	075 00
Rework	075 00
Compressor Rotor Wheels	074 00
Corrosion Inspection Limits	074 00
First−Stage Wheel Shot Peen Repair	074 00
Fourteenth−Stage Hub Repair	074 00
Fourteenth−Stage Wheel Repair	074 00
Inspection	074 00
Plating Repair	074 00
Repair	074 00
Thirteenth−Stage External Spline Inspection	074 00
Compressor Side Gear	080 00
Inspection	080 00
Repair	080 00
Compressor Stator Vanes	073 00
Inspection	073 00
Compressor Wheel Tie Bolt	076 00
Inspection	076 00
Repair	076 00
Coordinator Control	130 00
Assembly	130 00
Lever Installation	130 00
Cleaning, Inspection, and Repair	130 00
Bearing and Cam Journal Metallizing Repair	130 00
Bushing and Sleeve Bearing Replacement	130 00
Coordinator Cover Pin Replacement	130 00
Feather Control Cam and Helical Spring	130 00
Feathering Shaft Assembly	130 00
Latch and Cam Track Clearance Check	130 00
Main Shaft and Gear Assembly	130 00
Propeller Coordinator Shaft Assembly and Propeller Coordinator Latch	130 00
Variable Resistor and Gear Assembly Repair	130 00

Title	WP Number
Variable Resistor Gear Replacement or Transfer	130 00
Disassembly	130 00
Lubrication	130 00
Predisassembly Test	130 00
Testing	130 00
Coordinator Control Testing Using 6799286 Test Stand	130 00
Coordinator Control Testing Using 6872414 or 6893547 Test Stand	130 00
Linearity Test of Variable Resistor	130 00
Cross Manual Reference	003 00
Double Paper Element Fuel Filter Assembly	136 00
Assembly	136 00
Disassembly	136 00
Inspection	136 00
Nick and Gouge Repair	136 00
Repair	136 00
Safety Wire Clip Repair	136 00
Scratch Repair	136 00
Test Requirements	136 00
Valve Seat Damage Repair	136 00
Electrical Feather Solenoid	134 00
Assembly	134 00
Cleaning	134 00
Disassembly	134 00
Inspection	134 00
Plunger Assembly Recoating	134 00
Repair	134 00
Testing	134 00
Engine Mount Brackets	085 00
Engine Rear Mount Bracket	085 00
Inspection	085 00
Repair	085 00
Engine Side Mount Forward and Rear Bracket	085 00
Inspection	085 00
Repair	085 00

Title	WP Number
Engine Test	021 00
Engine Functional Run Before Engine Test	021 00
Anti−Icing Air Valve Operation Check	021 00
Compressor and Turbine Seal Break−In	021 00
Compressor and Turbine Seal Break−in Schedule	021 00
Digital Electronic Trim Control Check	021 00
Digital Electronic Trim Control Torque Calibration	021 00
Electrical Engine Shutdown and Negative Torque System (NTS) Check	021 00
Engine Fuel and Oil Leakage Check	021 00
Final Control Check	021 00
Fuel Control Governor Check	021 00
Mechanical Fuel Shut−Off	021 00
On−Board Engine Transducer Check	021 00
Prestarting Adjustments and Checks	021 00
Propeller Brake System Check	021 00
Reverse Thrust Operation Check	021 00
Starting Procedure	021 00
Thrust Sensitive Signal (TSS) System Check	021 00
Torquemeter Setting	021 00
Transient Vibration Check	021 00
Engine Inspection After Test	021 00
Compressor Rotor Blade−to−Compressor Case Rub	021 00
Leakage Checks	021 00
Visual Inspections	021 00
Engine Performance Evaluation	021 00
Data Correction Method	021 00
Compensated Turbine Measured Temperature	021 00
Determination of Acceptable Engine	021 00
Determination of Percent Variance from Specification Values	021 00
Fuel Flow	021 00
Horsepower	021 00
Plotting Horsepower and Fuel Flow	021 00
Specific Fuel Consumption Correction	021 00
Performance Limits	021 00
Engine Fuel System Preservation and Removal from Test Cell	021 00
Engine Starting and Shutdown Procedures	021 00

Title	WP Number
Engine Test	021 00
Acceptance Test Run Schedule	021 00
Penalty Run Schedules	021 00
Test Data to be Recorded	021 00
Engine Test Requirements	021 00
Compensated Turbine Measured Temperature	021 00
Diffuser Sump Pressure	021 00
Fuel and Oil Leakage Limits	021 00
Fuel Specification	021 00
Fuel System Operating Parameters	021 00
Fuel Inlet Pressure	021 00
Fuel Pressure Fluctuation	021 00
Maximum and Minimum Fuel Flow Limits	021 00
Governor Speed	021 00
Maximum Shaft Horsepower	021 00
Oil Specification	021 00
Oil System Operating Parameters	021 00
Oil Boost Pressure	021 00
Oil Consumption	021 00
Oil Flow	021 00
Oil Inlet Pressure	021 00
Oil Inlet Temperature	021 00
Oil Pressure	021 00
Oil Pressure Fluctuation	021 00
Oil Vapor	021 00
Scavenge Oil Pressure	021 00
Power Transients	021 00
Safety Coupling	021 00
Speed Control	021 00
Turbine Flange Air Leakage	021 00
Test Cell Operating Precautions	021 00
Vibration (Engine Monitoring System)	021 00
Vibration (Support Equipment System)	021 00
Extension Shaft Bearing Cage	079 00
Inspection	079 00
Extension Shaft Bearing Retaining Ring	078 00
Inspection and Repair	078 00

Title	WP Number
Forward Flowpath Inner Shroud	102 00
Crack Weld Repair	102 00
Inside (slotted) Diameter Wear Repair	102 00
Inspection	102 00
Mounting Flange Bolt Hole Repair	102 00
Repair	102 00
Front Reverse Torque Indicator Plate	044 00
Inspection	044 00
Repair	044 00
Fuel Hose Assemblies	135 00
Cleaning	135 00
Inspection	135 00
Installation	135 00
Repair	135 00
Test Requirements	135 00
Fuel Spray Nozzle	124 00
Cleaning	124 00
Testing	124 00
Air Blast Circuit Test	124 00
Flow Calibration Test	124 00
Hysteresis, Check	124 00
Patternator Test	124 00
Pressure Test	124 00
Spray Angle Test	124 00
Gears	016 00
Inspection	016 00
Harness Assemblies	128 00
Power Unit Left Hand (LH) (W/EMS) Shielded Branched Wiring Harness Assembly, Right Hand (RH) Wiring Harness Assembly, and Shielded Interconnecting Wiring Harness Assembly	128 00
Assembly	128 00
Cleaning	128 00
Disassembly and Repair	128 00
Inspection	128 00

Title	WP Number
Testing	128 00
Spark Igniter Lead Assemblies	128 00
Cleaning	128 00
Disassembly	128 00
Inspection	128 00
Repair and Assembly	128 00
Testing	128 00
Turbine Thermocouple Wiring Harness	128 00
Assembly	128 00
Cleaning	128 00
Disassembly	128 00
Inspection	128 00
Repair	128 00
Testing	128 00
Helical Spline Coupling	045 00
Inspection	045 00
Repair	045 00
Ignition Relay	126 00
Testing	126 00
Inner Rear Exhaust Cone Assembly	102 00
Crack Weld Repair	102 00
Inspection	102 00
Mounting Bolt Hole Repair	102 00
Outside (slotted) Diameter Wear Repair	102 00
Repair	102 00
Threaded (puller) Plug Replacement	102 00
Introduction	002 00
Magnetic Particle and Fluorescent Penetrant Inspection	017 00
Fluorescent Penetrant Inspection	017 00
Procedure	017 00
Magnetic Particle Inspection	017 00
Compressor Wheels	017 00
Compressor Wheels with Blades Installed	017 00

Title	WP Number
Blade Defects	017 00
Wheel Defects	017 00
Inspection Fluid Requirements	017 00
Main Drive Gear	017 00
Pinion Gear	017 00
Planet Gear	017 00
Procedure	017 00
Small Gears	017 00
Sun Gear	017 00
Magnetic Plugs	133 00
Inspection	133 00
Testing	133 00
Main Diaphragm Assembly	039 00
Inspection	039 00
Repair	039 00
Bearing Bore Alignment Check	039 00
Carrier Rear Bearing Cage − Replacement	039 00
Oil Jet Nozzle Mounting Area Fretting − Repair	039 00
Pinion Gear Front Bearing Cage − Replacement	039 00
Pinion Gear Oil Jet Tube Pilot Hole − Repair	039 00
Main Drive Gear Assembly	043 00
Bearing Bore Repair	043 00
Inspection	043 00
Plasma Spray Coating (Molybdenum) Application	043 00
Plasma Spray Coating (Molybdenum) Removal	043 00
Repair	043 00
Static Balance	043 00
Sun Gear Hub Flange Mounting Bolt Hole Repair	043 00
Main Pressure and Scavenge Oil Pump	111 00
Assembly	111 00
Disassembly	111 00
Inspection	111 00
Repair	111 00
Testing	111 00

Title	WP Number
Materials Required − Alphabetical Listing	005 00
Negative Torque Indicator Plunger	059 00
Inspection and Repair	059 00
Negative Torque System Spline Ring	045 00
Inspection	045 00
Repair	045 00
Nose Bearing Plate	053 00
Front Surface Repair	053 00
Inspection	053 00
Repair	053 00
Oil Seal Assemblies	062 00
Oil Seal Assembly (Piston Ring Type)	062 00
Cleaning	062 00
Inspection and Repair	062 00
Plain Encased (Oil) Seals (Carbon Ring Type)	062 00
Anti−Rotation Spring Pin Replacement	062 00
Binding Carbon Ring Cleaning	062 00
Inspection and Repair	062 00
Repair Using Kitted Parts	062 00
Oil Seal Plug Replacement	048 00
Hydraulic Pump and Generator Drive Shaft	048 00
Hydraulic Pump Idler Drive Shaftgear	048 00
Side Accessory Drive Shaft	048 00
Tachometer Drive Gear	048 00
Tachometer Drive Shaft	048 00
Oil Tubes	055 00
Carrier Oil Lube Tube	055 00
Inspection and Repair	055 00
Pilot Journal Wear and Scoring Repair	055 00
Cleaning	055 00
Pinion Gear Oil Jet Tube Assembly	055 00
Inspection and Repair	055 00
Pilot Journal Wear Repair	055 00

Title	WP Number
Propeller Brake Oil Tube	055 00
Inspection and Repair	055 00
Pilot Journal Wear and Scoring Repair	055 00
Sun Gear Lube Tube Assembly	055 00
Cleaning	055 00
Inspection and Repair	055 00
Tach Bearing Oil Tube Assembly	055 00
Inspection and Repair	055 00
Pinion Gear Assembly	042 00
Assembly	042 00
Bearing Inspection	042 00
Cleaning − Parts	042 00
Coupling Outer Member Shaft	042 00
Inspection	042 00
Repair	042 00
Disassembly	042 00
Pinion and Main Accessory Drive Shaftgear	042 00
Inspection	042 00
Repair	042 00
Replacement − Flanged Bushing	042 00
Runout Check	042 00
Scavenge Pump Drive Pinion Gear	042 00
Inspection	042 00
Repair	042 00
Runout Check	042 00
Planet Gear and Bearing Assembly	051 00
Assembly	051 00
Detail Parts Inspection	051 00
Detail Paris Repair	051 00
Disassembly	051 00
Planet Gear and Bearing Journal − Front and Rear Journal Repair	051 00
Planet Gear and Bearing Journal − Inside Diameter (Plug end) Repair	051 00
Planet Rear Carrier	050 00
Bearing Journal Repair	050 00
Flange and Planet Gear Bores Repair	050 00
Repair	050 00

Title	WP Number
Inspection	050 00
Plunger, Negative Torque Indicator	059 00
Inspection and Repair	059 00
Plating and Surface Treatment of Parts	018 00
Actithane WC 100 Paint	018 00
Surface Preparation and Painting	018 00
Touch−up Procedure	018 00
AEP 32 / AEP 100	018 00
Diffusion Heat Treating	018 00
Quality and Inspection Procedures	018 00
Surface Preparation and Coating	018 00
Alseal 500 or Alseal 518	018 00
Surface Preparation and Coating	018 00
Touch−up Procedure	018 00
Alseal 585	018 00
Coating Removal	018 00
Surface Preparation and Coating	018 00
Touch−up Procedure	018 00
Aluminum Alloy	018 00
Aluminum Paint	018 00
Surface Preparation and Painting	018 00
Touch−up Procedure	018 00
Black Oxide and Black Phosphate Processed Steel Parts	018 00
Cadmium Touch Up Plating	018 00
CoCrAlY	018 00
Corrosion Preventive Resin Coating	018 00
Chrome Plate	018 00
Double Shot Peen Repair	018 00
Plating Procedure	018 00
Stripping Procedure	018 00
Copper Brush Selective Plating with Dalic or Selectronic	018 00
Plating Procedure	018 00
Surface Preparation	018 00
Hard−Faced Electroless Nickel Plating	018 00
Plating Procedure	018 00
Plating Quality	018 00
Surface Preparation	018 00

Title	WP Number
Magnesium Alloy	018 00
Metal Spray Coating	018 00
Nickel−Cadmium Diffused Plating	018 00
Nickel Plate−General Purpose	018 00
SerMetel W	018 00
Touch−up Procedure	018 00
Surface Preparation and Coating	018 00
Silver Plate−General Purpose	018 00
Splitline Coating	018 00
Power Section External Scavenge Oil Pump	113 00
Assembly	113 00
Disassembly	113 00
Inspection and Repair	113 00
Testing	113 00
Power Section Oil Filter	118 00
Assembly	118 00
Cleaning	118 00
Disassembly	118 00
Inspection and Repair	118 00
Testing	118 00
Preparation for Test	020 00
Engine Assembly Installation on Test Dolly	020 00
Engine Drain Connections	020 00
Engine Linkage Installation	020 00
Engine Speed and Torquemeter Output Instrumentation Connections	020 00
Mounting Test Dolly and Engine Assembly on Test Dolly Support	020 00
Pressure and Temperature Test Point Fittings and Adapters	020 00
Pressure Test Point Fittings and Adapters Installation	020 00
Temperature Test Point Adapters Installation	020 00
Pressure Sensing Connections	020 00
Prestart Checks and Adjustments	020 00
Service Connections	020 00
Slave Starter and Tachometer Generators Installation	020 00
Temperature Sensing Connections	020 00
Vibration Transducers (Pickups) Installation	020 00
Test Cell Electrical Power and Instrumentation Configuration Requirements	020 00

Title	WP Number
Pressure (Fluid and Air) Test Point Locations	020 00
Temperature (Fluid and Air) Test Point Locations	020 00
Test Cell Electrical Power Requirements	020 00
Alternating Current (AC) Power Requirements	020 00
Direct Current (DC) Power Requirements	020 00
Test Cell Instrumentation Requirements	020 00
Propeller Brake Assembly, Cone Type	041 00
Assembly for Bench Test	041 00
Balance Propeller Brake Assembly	041 00
Assembly for Dynamic Balance	041 00
Disassembly	041 00
Dynamic Balance	041 00
Bearing Inspection	041 00
Bench Test	041 00
Cleaning	041 00
Disassembly	041 00
Inner Propeller Brake Cone Grinding	041 00
Inner Propeller Brake Cone Inspection	041 00
Inner Propeller Brake Cone Repair	041 00
Matched Set Component Description	041 00
Outer Member Assembly Facing (Lining) Replacement	041 00
Outer Member Assembly Inspection	041 00
Outer Member Assembly Repair	041 00
Starter Shaft Assembly Inspection	041 00
Starter Shaft Assembly Repair	041 00
Starter Shaft Internal Spline Inspection	041 00
Starter Shaft Plug Transfer Tube Bore Repair	041 00
Starter Spur Gear Inspection	041 00
Starter Spur Gear Rear Face Repair	041 00
Starter Spur Gear Repair	041 00
Starter Shaft Bearing Flange Inspection	041 00
Starter Shaft Bearing Flange Repair	041 00
Propeller Brake Oil Tube	055 00
Inspection and Repair	055 00
Pilot Journal Wear and Scoring Repair	055 00

Title	WP Number
Propeller Control Linkage	061 00
Inspection	061 00
Repair	061 00
Propeller Shaft	036 00
Inspection	036 00
Inspection for Presence of Chrome−Plate Repairs	036 00
Propeller Shaft Flange and Planet Gear Bores Repair	036 00
Repair	036 00
Propeller Shaft (Oil) Seal Assembly	056 00
Inspection and Repair	056 00
Propeller Shaft Thrust Bearing Nut	058 00
Inspection and Repair	058 00
Outside Diameter Plating Repair	058 00
Rear Reverse Torque Indicator Ring	044 00
Inspection	044 00
Repair	044 00
Reduction Gear Assembly−Assembly	033 00
Front Housing Assembly	033 00
Front Housing External Components	033 00
Electrical (Propeller) Feather Solenoid Assembly Installation	033 00
Propeller Control Linkage Installation	033 00
Reduction Gear Eyebolt and Strut Installation	033 00
Thrust Sensitive Signal System Actuator Installation	033 00
Thrust Sensitive Switch Assembly Installation	033 00
General Instructions and Information	033 00
Assembly Fit Limits	033 00
Assembly Torque Requirements	033 00
Cup Washer installation	033 00
Lubrication and Sealant Compound Requirements	033 00
Spanner Nut Face Lapping	033 00
Handling Heated and Super−Chilled Parts	033 00
Main Diaphragm Assembly	033 00
Main Diaphragm Assembly and Installation	033 00
Pinion Gear Assembly, Main Drive Gear, and Sun Gear Installation	033 00

Title	WP Number
Propeller Shaft and Planetary Gear Assembly	033 00
Carrier Oil Delivery Flange and Sun Gear Lube Tube Assemblies Installation	033 00
Planet Gear and Bearing Assemblies, Rear Carrier, and Rear Carrier Front Bearing Inner Ring Installation	033 00
Propeller Shaft and Planetary Gear Assembly Installation	033 00
Propeller Shaft, Drive Gear, Nose Bearing Plate and Scavenge Pump Assembly, Thrust Ball Bearing, Roller Bearing Inner Ring, and Thrust Signal Bracket and Lever Assembly	033 00
Propeller Shaft Axial Movement (End Play) Check	033 00
Rear Housing and (inner) Diaphragm Assembly	033 00
Alternator Drive Gear Assembly Installation	033 00
Cone Type Propeller Brake Assembly Installation	033 00
Generator Shaft and Hydraulic Pump Drive Gear Installation	033 00
Hydraulic Pump Drive Gear Assembly Installation	033 00
Hydraulic Pump Drive Idler Gear Installation	033 00
Hydraulic Pump Idler Gear Installation	033 00
Inner Diaphragm Installation	033 00
Main Idler Gear Installation	033 00
Oil Pump Drive Gear Installation	033 00
Oil Pump Idler Gear Installation	033 00
Rear Housing Installation into Turnover Stand, and Plugs and Oil Pressure Relief Valve Installation	033 00
Tachometer Drive Gear Installation (Two Places)	033 00
Tachometer Drive Idler Gear Installation	033 00
Rear Housing Assembly Installation	033 00
Rear Housing External Components	033 00
Accelerometer (Electric Piezo) and Mounting Bracket Installation	033 00
Mounting Pad Cover Installation	033 00
Oil Pressure Relief Valve Assembly Installation	033 00
Oil Pump and Filter Assembly Installation	033 00
Scavenge Oil Outlet Magnetic Plug Body Assembly Installation	033 00
Reduction Gear Plugs	033 00
Front Housing Plugs Installation	033 00
Rear Housing Plugs Installation	033 00
Reduction Gear Assembly−Disassembly	032 00
Front Housing Assembly and Components Disassembly	032 00
Installation of Reduction Gear Assembly into Turnover Stand	032 00
Pinion Shaftgear, Main Drive Gear Assembly, Sun Gear, and Main Diaphragm Assembly Removal	032 00
Main Diaphragm Assembly Removal and Disassembly	032 00

Title	WP Number
Main Drive Gear Assembly and Sun Gear Removal	032 00
Pinion Shaftgear (And Bearings) Removal	032 00
Propeller Shaft and Planetary Gears Removal and Disassembly	032 00
Propeller Shaft Thrust Bearing Nut Removal	032 00
Rear Housing and (Inner) Diaphragm Assembly and Components Disassembly	032 00
Alternator Drive Gear Assembly Removal	032 00
Alternate Hydraulic Pump Drive Idler Gear Removal	032 00
Cone Type Propeller Brake Assembly Removal	032 00
Generator Drive Shaft and Hydraulic Pump Drive Gear Removal	032 00
Hydraulic Pump Idler Gear Removal	032 00
Hydraulic Pump Drive Shaft, Drive Gear, and Tachometer Drive Take-Off Gear Removal	032 00
Loosening of Accessory Drive Spanner Nuts and Removal of (Inner) Diaphragm	032 00
Main Idler Gear Removal	032 00
Oil Pump Drive Idler Journal and Pump Drive Idler Gear Removal	032 00
Oil Pump Drive Shaft and Oil Pump Drive Gear Removal	032 00
Oil Seals Removal	032 00
Tachometer Drive Idler Gear Removal	032 00
Tachometer Drive Shafts and Drive Gears Removal	032 00
Rear Housing and (Inner) Diaphragm Assembly Removal	032 00
Reduction Gear Assembly Test	022 00
Preparation for Storage	022 00
Propeller Shaft Axial Movement (End Play) Check	022 00
Removal From Test Stand	022 00
Test	022 00
Acceptance Test Limits	022 00
Acceptance Test Run	022 00
Inspection After Acceptance Test	022 00
Oil Leakage Limits	022 00
Preliminary Run	022 00
Preparation For Test	022 00
Service Connections	022 00
Reduction Gear Eyebolt	060 00
Inspection	060 00
Repair	060 00

Title	WP Number
Reduction Gear Eyebolt Pin	060 00
Inspection	060 00
Repair	060 00
Reduction Gear Front and Rear Housing Assemblies and Main Diaphragm Assembly	040 00
Painting (Respray) Procedure	040 00
Touch−Up Painting Procedure	040 00
Reduction Gear Front Housing Assembly	038 00
Inspection	038 00
Repair	038 00
Bearing Cage − Replacement	038 00
Drain Plug Threaded Insert − Replacement	038 00
Front Face − Corrosion Repair	038 00
Negative Torque System Actuator Rod Seal Bore − Rework	038 00
Negative Torque System Actuator Rod Bushing − Replacement	038 00
Screw Bushing Boss Crack − Magnesium Plug Repair	038 00
Screw Bushing Boss Crack − Weld Repair	038 00
Reduction Gear Main Scavenge Oil Pump	116 00
Assembly	116 00
Disassembly	116 00
Inspection and Repair	116 00
Test	116 00
Reduction Gear Oil Filter	115 00
Assembly	115 00
Cleaning	115 00
Disassembly	115 00
Inspection and Repair	115 00
Reduction Gear Oil Pressure Relief Valves	117 00
Assembly	117 00
Disassembly	117 00
Inspection	117 00
Testing	117 00

Title	WP Number
Reduction Gear Oil Pump Assembly	114 00
Assembly	114 00
Cleaning	114 00
Disassembly	114 00
Inspection	114 00
Repair	114 00
Cover Repair	114 00
Drive Gear, Idler Gear, and Bushing Replacement	114 00
Guide Repair	114 00
Pump Body Repair	114 00
Testing	114 00
Reduction Gear Rear Housing and Inner Diaphragm Assembly	037 00
Bearing Bore Alignment Check	037 00
Inner Diaphragm Assembly	037 00
Boss Height − Inspection	037 00
Boss Height − Repair	037 00
Inspection	037 00
Mounting Pads − Repair	037 00
Repair	037 00
Rear Housing Assembly	037 00
Alternator, Generator, and Hydraulic Pump Pad − Seal Bore Repair	037 00
Alternator and Hydraulic Pump Pad − Repair Using Service Repair Ring	037 00
Alternator Pad − Flange Repair	037 00
Inspection	037 00
Lockwire Lug (Propeller Brake Oil Port) − Damaged (Break−Out) Hole Repair	037 00
Pinion Gear Bearing Cage− Replacement	037 00
Repair	037 00
Side Mount Bore − Repair	037 00
Starter and Hydraulic Pump Pad − Flange Repair	037 00
Starter Pad and Bore − Corrosion Repair	037 00
Starter Pad Bore − Repair Using Service Repair Ring	037 00
Strut Eyebolt Boss and Hole − Repair	037 00
Tachometer Drive Bearing Cages, Oil Pump Drive Idler Journal, and Oil Pump Drive Bearing Cage Mounting Bosses − Fretting and Wear Repair	037 00
Tachometer Pad − Bore Repair	037 00
Torquemeter Housing − Pilot Diameter Repair	037 00
Rear Housing Oil Seals − Removal	037 00

Title	WP Number
Reduction Gear to Power Section Strut Assembly	035 00
Inspection	035 00
Repair	035 00
Reverse (Negative) Torque Switch Actuator Rod	059 00
Conical Tip Wear Repair	059 00
Inspection and Repair	059 00
Ring Gear	045 00
Inspection	045 00
Repair	045 00
Ring Gear Coupling	045 00
Inspection	045 00
Repair	045 00
Ring Gear Front, Intermediate, and Rear Retaining Springs	045 00
Inspection	045 00
Inspection for Distortion	045 00
Repair	045 00
Ring Gear Intermediate Coupling	045 00
Inspection	045 00
Repair	045 00
Safety Coupling Assembly	065 00
Assembly	065 00
Decoupling Torque Check	065 00
Disassembly	065 00
Parts Cleaning	065 00
Coupling Housing	065 00
Inspection	065 00
Repair	065 00
Coupling Inner, Outer, and Intermediate Members	065 00
Inspection	065 00
Repair	065 00
Coupling Spring Seats, Spacer, and Internal and External Rings	065 00
Inspection and Repair	065 00

Title	WP Number
Safety Coupling Spline Teeth	065 00
Intermediate Member Tooth Root Radius Inspection	065 00
Lapping Procedure	065 00
Sheet Metal Parts	010 00
General Repair of Sheet Metal Parts	010 00
Single Element High Pressure Fuel Filter	121 00
Assembly	121 00
Cleaning	121 00
Disassembly	121 00
Inspection	121 00
Repair	121 00
Testing	121 00
Spark Igniters	125 00
Cleaning	125 00
Inspection and Repair	125 00
Testing	125 00
Special Muted Machine Bolt	057 00
Bonded Rubber Mute Replacement	057 00
Inspection and Repair	057 00
Speed Sensitive Valve	137 00
Assembly	137 00
Cleaning	137 00
Disassembly	137 00
Inspection and Repair	137 00
Testing	137 00
Splines, Internal and External	047 00
Compressor Side Gear Internal Spline Repair	047 00
External Spline Pitch Diameter Measurement − Alternate Method	047 00
External Splines Inspection	047 00
External Splines Repair	047 00
Internal Spline Pitch Diameter Measurement − Alternate Method	047 00
Internal Splines Inspection	047 00
Internal Splines Repair	047 00

Title	WP Number
Spray Shield Baffle and Baffle Ring	084 00
Inspection	084 00
Repair	084 00
Weld Repair	084 00
Spring Tension Washers	049 00
Inspection	049 00
Repair	049 00
Standard Practices	009 00
General Repair and Replacement Procedures	009 00
AN and MS Standard Parts Repair and Replacement	009 00
Definitions	009 00
Weld Repair	009 00
Special Inspection Requirements	009 00
Strut Clevis Bolt	060 00
Inspection	060 00
Repair	060 00
Stud Replacement	015 00
Lubrication	015 00
Oversizes	015 00
Retapping	015 00
Selection	015 00
Sun Gear	052 00
Inspection	052 00
Repair	052 00
Sun Gear Hub	052 00
Inspection	052 00
Repair	052 00
Sun Gear Hub Flange	052 00
Heavy Scoring Repair	052 00
Inspection	052 00
Light Scoring Repair	052 00
Repair	052 00

Title	WP Number
Sun Gear Lube Tube Assembly	055 00
Cleaning	055 00
Inspection and Repair	055 00
Support Equipment Maintenance	019 00
Preparation of Support Equipment for Shipment or Storage	019 00
Support Equipment Covered by Separate Publications	019 00
Support Equipment Inspection and Testing	019 00
Support Equipment Preventive Maintenance	019 00
Care of Tools	019 00
Lifting Slings and Restraining Devices − Inspection and Proofload Testing	019 00
Torque Tools − Use, Care and Testing Instructions	019 00
Support Equipment Alphabetical Listing	004 00
System Components Installation	024 00
System Components Removal	023 00
Tach Bearing Oil Tube Assembly	055 00
Inspection and Repair	055 00
Thermocouple Assembly	127 00
Cleaning	127 00
Inspection	127 00
Test	127 00
Threaded Parts	013 00
Repair	013 00
Thrust Sensitive Switch	132 00
Assembly	132 00
Disassembly	132 00
Inspection and Repair	132 00
Carbon Switch	132 00
Harness Assembly	132 00
Testing	132 00
Tie Bolt, Turbine−to−Compressor	110 00
Inspection	110 00

Title	WP Number
Repair	110 00
Diameters A, B, C, and D Repair	110 00
Torque Indicator Plate, Front Reverse	044 00
Inspection	044 00
Repair	044 00
Torque Indicator Ring, Rear Reverse	044 00
Inspection	044 00
Repair	044 00
Torquemeter and Anti−Icing Shroud Unit Assembly	031 00
Installation	031 00
Torquemeter Anti−Icing Cowl Assembly (Cushion and Noncushion Mounted)	031 00
Torquemeter Housing Assembly, Bearing Lock Tube, Center Bearing Outer Race and Rollers, and Bearing Lock Key (Assembled Unit)	031 00
Torquemeter Shaft and Safety Coupling Assembly	031 00
Removal	031 00
Matched Set Component Description	031 00
Torquemeter Anti−Icing Cowl Assembly (Cushion and Noncushion Mounted)	031 00
Torquemeter Housing Assembly, Bearing Lock Tube, Center Bearing Outer Race and Rollers, and Bearing Lock Key (Assembled Unit)	031 00
Torquemeter Shaft and Safety Coupling Assembly	031 00
Torquemeter Bearing Oil Nozzle	083 00
Inspection	083 00
Repair	083 00
Torquemeter Housing Assembly	063 00
Inspection	063 00
Pick−up Mounting Block Replacement	063 00
Repair	063 00
Torquemeter Inner and Outer Shaft Assembly	064 00
Assembly	064 00
Cleaning (Parts)	064 00
Disassembly	064 00
Torquemeter Inner Shaft	064 00
Exciter Teeth Rework	064 00

Title	WP Number
Inspection	064 00
Repair	064 00
Replacement	064 00
Sleeve (Fiber and Bronze) Replacement	064 00
Torquemeter Outer Shaft	064 00
Exciter Teeth Rework	064 00
Inspection	064 00
Repair	064 00
Replacement	064 00
Torquemeter Pickup Assembly	129 00
Inspection	129 00
Repair	129 00
Testing	129 00
Torquemeter Shaft and Coupling Assembly	066 00
Balancing	066 00
Preparation for Balancing	066 00
Tubing Assemblies	086 00
Inspection	086 00
Repair	086 00
Testing	086 00
Turbine Bearing Oil Tubes	103 00
Inspection	103 00
Repair	103 00
Weld Repair	103 00
Turbine Blades, First−through Fourth−Stage	108 00
Cleaning	108 00
Inspection	108 00
Repair	108 00
Turbine Clamp Bolt and Clamp Bolt Nut	107 00
Turbine Rotor Clamp Bolt	107 00
Inspection	107 00
Repair	107 00

Title	WP Number
Turbine Rotor Clamp Bolt Nut	107 00
Inspection	107 00
Repair	107 00
Turbine Coupling Shaft Assembly	109 00
Adapter Repair	109 00
Assembly	109 00
Balance Procedure	109 00
Disassembly	109 00
Inspection	109 00
Repair	109 00
Turbine Front Bearing Cage Assembly	096 00
Honeycomb Insert Replacement	096 00
Inspection	096 00
Repair	096 00
Turbine Front Bearing Labyrinth Seat	097 00
ID Repair	097 00
Inspection	097 00
Repair	097 00
Turbine Front Bearing Support	094 00
Diameter B Repair	094 00
Diameter F Repair	094 00
Inspection	094 00
Repair	094 00
Turbine Front Bearing Vibration Damper	095 00
Inspection	095 00
Repair	095 00
Turbine Guide Vane and Seal Support Assemblies	099 00
Inspection	099 00
Repair	099 00
Turbine First−Stage Vane Support Assembly	099 00
Honeycomb Seal Replacement	099 00
Honeycomb Installation	099 00
Honeycomb Removal	099 00
Piston Ring Installation	099 00
Piston Ring Removal	099 00

Title	WP Number
Second−Stage Vane Seal Support	099 00
Honeycomb Seal Replacement	099 00
Plating	099 00
Second to Third−Stage and Third to Fourth−Stage Interstage Seal Support	099 00
Honeycomb Seal Replacement	099 00
Honeycomb Electro Static Grinding	099 00
Honeycomb Installation	099 00
Honeycomb Removal	099 00
Turbine Inlet Assembly, First−Stage	093 00
Assembly	093 00
Blade Track Radius Grinding	093 00
Blade Track Radius Measurement Before Disassembly	093 00
Cleaning	093 00
Disassembly	093 00
Inspection and Repair	093 00
First−Stage Turbine Saddle	093 00
First−Stage Turbine Vane Assembly	093 00
Turbine First−Stage Vane Support Assembly	093 00
Turbine Inlet Casing Assembly	093 00
Turbine Inlet Casing Assembly	092 00
Borescope Stud Replacement	092 00
Crack Weld Repair	092 00
Crack Removal and Preparation for Welding	092 00
Front and Rear Flange Bolt Hole	092 00
Front Bearing Support and Insulation Blanket Mounting Flange Bolt Hole	092 00
General Crack Welding Procedures	092 00
Piloting Key Slot	092 00
Strut	092 00
Dimension Inspection	092 00
Dowel Pin Replacement	092 00
Inspection	092 00
Locating Pin Replacement	092 00
Piloting Key Slot Wear Repair	092 00
Repair	092 00
Stress Relief After Weld Repair	092 00

Title	WP Number
Turbine Rear Bearing Cage	105 00
Bearing Pocket Repair (Surface B)	105 00
Diameter A and C Repair	105 00
Inspection	105 00
Repair	105 00
Surface D and E Repair	105 00
Turbine Rear Bearing Retaining Assembly	105 00
Inspection	105 00
Oil Passage Cleaning	105 00
Repair	105 00
Turbine Rear Bearing Seals	104 00
Rear Turbine Sump Seal	104 00
Fretting Repair	104 00
Inspection	104 00
Oil Passage Cleaning and Inspection	104 00
Repair	104 00
Thread Repair	104 00
Turbine Rear Bearing Support Assembly	101 00
Bearing Cage Pilot Diameter Repair	101 00
Crack Weld Repair	101 00
Bearing Cavity	101 00
Crack Removal and Preparation for Welding	101 00
Front Flange Belt Hole	101 00
General Crack Welding Procedure	101 00
Outer Cone (Excluding Rear Flange Area)	101 00
Outer Housing	101 00
Piloting Key Slot	101 00
Rear Flange Area	101 00
Stiffener Rings	101 00
Struts and Attaching Strut Welds	101 00
Dimensional Inspection	101 00
Inspection	101 00
Oil Seal Surface Repair	101 00
Piloting Key Slot Wear Repair	101 00
Repair	101 00
Scavenge Pump Support Flange Repair	101 00

Title	WP Number
Stress Relief After Welding	101 00
Turbine Rear Scavenge Oil Pump	112 00
Assembly	112 00
Disassembly	112 00
Inspection and Repair	112 00
Turbine Rotor Assembly − Disassembly	029 00
Installation Into Holding Fixture	029 00
Separation Into Wheel Assemblies	029 00
Wheel Disassembly	029 00
Labyrinth Seal and Blade Removal (First−Stage)	029 00
Spacer Seal and Blade Removal (Second−Stage)	029 00
Seal and Blade Removal (Third−Stage)	029 00
Seal and Blade Removal (Fourth−Stage)	029 00
Turbine Rotor Assembly − Assembly and Balance	030 00
Assembly	030 00
First− to Second−Stage Spacer Assembly Installation	030 00
Fourth−Stage Wheel Installation	030 00
Front Labyrinth Seal and Balance Plate Installation	030 00
Third−Stage Wheel Installation	030 00
Blade and Seal Installation (First−Stage)	030 00
Blade and Seal Installation (Second−Stage)	030 00
Blade and Seal Installation (Third−Stage)	030 00
Blade and Seal Installation (Fourth−Stage)	030 00
Blade Tip Radius Inspection	030 00
Clamp Bolt Measurement	030 00
Rotor Runout and Stack Dimension Inspection	030 00
Wheel Assembly Balancing	030 00
Turbine Rotor Clamp Bolt	107 00
Inspection	107 00
Repair	107 00
Turbine Rotor Clamp Bolt Nut	107 00
Inspection	107 00
Repair	107 00

Title	WP Number
Turbine Rotor Wheels	106 00
Diameter M Repair (First−Stage)	106 00
Diameter M Repair (First−Stage Alternate Procedure)	106 00
Inspection	106 00
Journal Repair (First− and Fourth−Stage)	106 00
Repair	106 00
Turbine Vane Assemblies	098 00
Dimensional Check	098 00
First− and Second−Stage Cooling Air Passage Inspection	098 00
Inspection	098 00
Repair	098 00
Turbine Vane Case Assembly	100 00
Crack Removal and General Welding Procedures	100 00
Crack Removal and Preparation for Welding	100 00
General Crack Welding Procedures	100 00
Front and Rear Flange Piloting Key Slot Wear Repair	100 00
Front and Rear Flange Piloting Key Slot Crack Repair	100 00
Inspection	100 00
Repair	100 00
Thermocouple Stud Replacement	100 00
Vane Assembly Pilot Lips Crack Repair	100 00
Vane Key Slot Wear Repair	100 00
Wall Crack Repair	100 00
Turbine Vent Tube	106 00
Inspection	106 00
Repair	106 00
Turbine Vent Tube Seal Rings	106 00
Inspection	106 00
Repair	106 00

DEPOT MAINTENANCE

INTRODUCTION

1. **PURPOSE.**

2. This technical manual details all necessary information required to perform depot maintenance on the T56−A−427 turboprop engine.

3. The T56 engine consists of an axial flow, internal combustion, gas turbine power section which is connected to a reduction gear by a torquemeter and two supporting struts.

4. **SCOPE.**

5. INTRODUCTION. This manual is produced to work package (WP) format; each WP contains approved intermediate level maintenance information and instructions. The WPs are arranged in a general workflow sequence and can be grouped into two main categories.

6. Reference Information. This category contains WPs detailing:

a. Support Equipment.

b. Reference Materials.

c. Engine Description and Operation.

d. Standard Practices.

7. Maintenance Information. This category contains WPs detailing:

a. Preparation for Service or Storage.

b. Engine Testing.

c. Pre−induction and Inspection.

d. Removal and Installation.

e. Disassembly, Cleaning, Inspection, Repair and Assembly.

8. ALPHABETICAL INDEX. WP 001 00 contains an alphabetical index of all WP titles and significant paragraph headings contained throughout this manual; in addition, where applicable, titles are repeated listed by significant modifiers.

9. SUPPORT EQUIPMENT. WP 004 00 contains a complete alphanumerical listing of all support equipment required in the maintenance tasks detailed throughout this manual.

10. MATERIALS REQUIRED. WP 005 00 contains tabular alphanumerical listings of all consumable materials required in the maintenance tasks detailed throughout this manual.

11. REFERENCE MATERIAL. Table 1 is a consolidated list of all technical documents required to support specific WPs throughout this manual; these documents are identified as required in the Reference Materials list in each affected WP.

12. REQUISITIONING AND AUTOMATED DISTRIBUTION OF NAVAIR TECHNICAL PUBLICATIONS. The following steps apply to requisitioning and automated distribution of NAVAIR technical publications.

a. Procedures to be used by Naval activities and other Department of Defense organizations requiring NAVAIR technical publications are defined in the NAVAL AIR SYSTEM COMMAND TECHNICAL MANUAL PROGRAM manual, NAVAIR 00−25−100 and NAVAIR−INST 5605.4A, Distribution of Aeronautic Technical Publications.

b. When an activity has a continuing requirement for automatic distribution of technical publications NAVAIR 00−25DRT−1, Naval Aeronautic Publications Automatic Distribution Tables shall be used. For complete information on distribution refer to NAVAIR 00−25−100.

13. **USE.**

14. GENERAL. Before performing any task, the user of this manual shall read and understand the relevant WP, and ensure that all support equipment and materials required are available.

15. It is essential that WARNINGS, CAUTIONS and NOTES are understood and applied before, and during all phases of operation and maintenance.

16. Each maintenance WP in this manual instructs the minimum maintenance tasks required to perform the general subject of the WP. All tasks within a WP shall be mandatory unless otherwise stated. Non−mandatory tasks are indicated by the words “(If Required)”.

17. ABBREVIATIONS. The first time an abbreviation is used within a WP, it will follow its definition and will be enclosed by parentheses.

EXAMPLE

Work Package (WP)

At all subsequent uses, within the same WP, the abbreviation only is shown without parentheses; refer to Table 2 and ASME Y14.38M for a complete listing of abbreviations and definitions used in this manual.

18. WORK PACKAGE FORMAT. The usability of a WP is the direct result of applying coordinated techniques to improve access of technical information and to simplify presentation methods; this is accomplished through controlled text legibility, highly visible primary and secondary paragraph headings, coordinated and consolidated text and illustrations by task.

19. All WP’s numbered 006 00 and above are technical content WP’s; the title pages follow a standard format (figure 1).

20. Publication Number − this is the official NAVAIR Identification Number assigned to this publication.

21. Work Package Number− a five digit number, with a space between the third and fourth digits, assigned to each WP task contained in the manual. The WP are arranged in the manual in numerical sequence.

22. Publication Date, Revision, Date, or Change Number and Date − the date appearing on the WP title page below the publication number. The dates are defined as follows:

- Publication Date: The issue date of the basic manual. This date will appear only on the title pages of all WP’s in the manual.

- Revision Date: The issue date of the revised manual (replaces publication date). This date will appear only on the title pages of all WP’s in the manual.

- Change Number and Date: The change number and issue date of the current change to the manual. The change number and date will appear on the title page and text pages of each WP changed in part in the current issue of the manual. When a WP is revised (during the manual change) the change number and date will appear on all pages of the WP and a replacement notice will appear below the Effectivity Notice in the title block.

23. Page Number and Count − indicates individual page number within the WP, and total number of subsequent pages.

Table 1. Consolidated List of Technical Publications

Publication Number	Title
A1−E2C2A−QEC−000	Intermediate Maintenance with IPB E−2C and C−2A QEC Manual
A1−E2C2A−QEC−010	Intermediate Maintenance with IPB E−2C and C−2A QEC Manual
Cataloging Handbook H4/H8	Commercial and Government Entity (Cage)
MIL−C−5541	Chemical Conversion Coating on Aluminum Alloys
MIL−H−25579	Fuel Hose Pressure Test Requirements
MIL−S−6872	Wire Braid Repair
NAVAIRINST 4423.3	Uniform Source Maintenance and Recoverability (SM&R) Code
NAVWEPS 17−15AC−10	Unitized Torquemeter Indicator Test Set Operation & Service Instructions with IPB
NAVAIR Form 13090/6A, Part III	Miscellaneous History
NAVAIR Form 13090/20	Aeronautical Equipment System Record
NAVAIR 01−E2AAA−2−10	Power Plant System, Navy Model E−2C Aircraft
NAVAIR 01−E2AAA−6	Periodic Maintenance Information Cards (PMIC)
NAVAIR 01−E2IMP−6−3	Special/Preservation/Conditional/ASPA Maintenance Requirement Cards E−2C and TE−2C
NAVAIR 01−1A−8	Engineering Manual Series Aircraft and Missile Repair Structural Hardware
NAVAIR 01−1A−20	Fuel Hose Repair
NAVAIR 01−1A−503	Maintenance of Aeronautical Antifriction Bearings
NAVAIR 01−1A−509	Aircraft Weapons System Cleaning & Corrosion Control Instructions
NAVAIR 02B−5DG−4	T56−A−427 IPB
NAVAIR 02B−5DG−6−1−1	External Tubing, Cabling & Clamping
NAVAIR 02−1−19	Heli−Coil Inserts General Installation
NAVAIR 03−20CFA−1	Operation & Maintenance Instructions 54460−1 Propeller
NAVAIR 07−1−503	Cleaning Materials
NAVAIR 07−1−504	Turbine Engine Cleaning Instructions
NAVAIR 15−02−500	Preservation of A/C Engines
NAVAIR 17−15AC−4	Test Set Electrical Components Check−Out, Operation & Service Instructions with IPB
NAVAIR 17−15AC−7	Tester, High Current Thermocouple, Operation and Service Instructions with IPB
NAVAIR 17−15AC−12	Thermocouple Resistance Tester
NAVAIR 17−15AC−15	Electronic Temp Datum Control Test Set, Operations & Service Instructions with IPB
NAVAIR 17−15AH−5	T56 Mobile Engine Test Stand Operating and Service Instructions
NAVAIR 17−15AH−28	Maintenance with IPB
T.O. 33D4−6−188−1	Temp Trim System Test Set PN 6799215, Operation & Service

Table 2. Abbreviations

Abbreviation	Term
ALT	Alternate
BRG	Bearing
DETC	Digital Electronic Trim Control
FC	Functional Check
FPI	Fluorescent Penetrant Inspection
H TEMP	High Temperature
HSG	Housing
HSGI	High Speed Ground Idle
IAW	In Accordance With
INC	Incorporated
INS	Insulated
JRN	Journal
MET	Mobile Engine Test
NA	Not Applicable
NCW	Not Complied With
NDI	Nondestructive Inspection
NINC	Not Incorporated
OP CK	Operational Check
OS	Oversize
P/N	Part Number
PMEL	Precision Measurement Equipment Laboratory
PMI	Preventive Maintenance Inspection
PPC	Power Plant Change
QEC	Quick Engine Change
QTY	Quantity
RGA	Reduction Gear Assembly
SE	Support Equipment
SEC	Section
SLF LKG	Self Locking
SN	Serial Number
T/M	Torquemeter
TD	Temperature Datum
TMDE	Test Measurement and Diagnostic Equipment
TMPI	Torquemeter Power Indication
TSLO	Time Since Last Overhaul
TSO	Time Since Overhaul
TT	Total Time
WP	Work Package

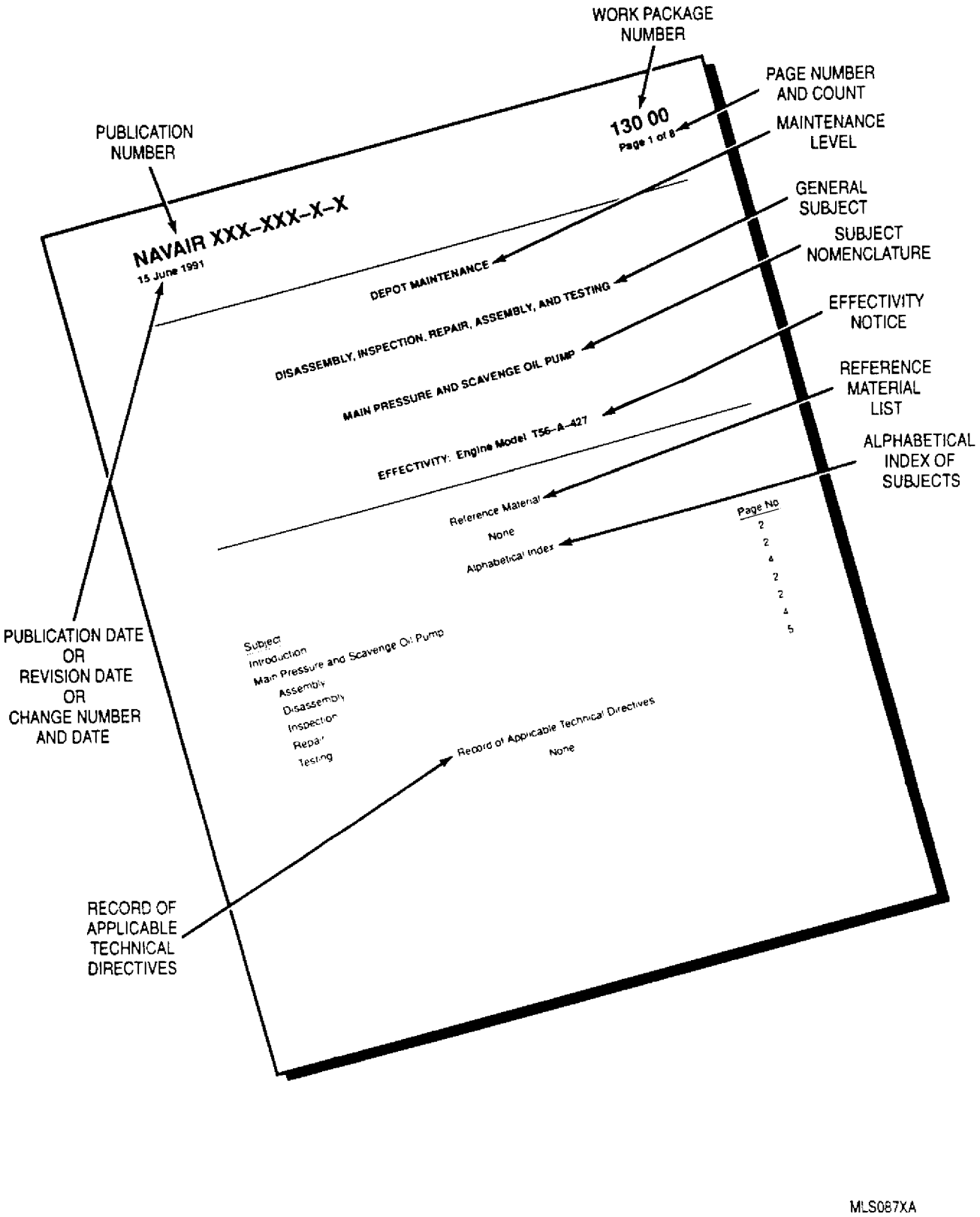

Figure 1. Work Package Title Page − Details of Standard Format

24. General Subject − details general tasks contained in the WP.

25. Subject Nomenclature − details title of subject contained in the WP.

26. Effectivity Notice − details engine model(s) WP applies to.

27. Reference Materials List − lists all additional information needed to complete tasks detailed in the WP. Each cross−reference to additional information is repeated at point of requirement within WP. References to work packages in other work package manuals will be indented under the applicable title. Where no reference material is needed, the word “None” appears.

28. Alphabetical Index of Subjects − lists in alphabetical order tasks detailed in the WP. All primary and secondary paragraph tasks are listed.

29. Record of Applicable Technical Directives − lists approved Engineering Change Proposals (ECP) for which technical directives have been, or are intended to be, issued.

a. The column headings are:

(1) Type/No. − the type and number of the directive, for example, Power Plant Change (PPC) 116.

(2) Date − the date that the directive was issued; a dash (−) indicates that the directive has not yet been issued.

(3) Title and ECP No. − the title of the directive followed by, if applicable, the ECP number in parentheses.

(4) Date Inc. − the date the directive was incorporated in the WP or, if the directive has not yet been issued, the date the ECP was incorporated. In the latter case the words “ECP coverage only” are entered in the Remarks column.

(5) Remarks − contains applicable remarks or, if none, a dash (−).

b. Where there are no applicable technical directives, the word “None” appears under the heading.

30. Support Equipment Required List − lists, in alphanumerical order, nonstandard tools, fixtures, gages, and standard measuring devices complete with part number or type designation, required to complete the task detailed in the paragraph (figure 2). Support equipment required to accomplish tasks referenced out to other WP’s are not included. Support Equipment Required lists are not applicable to Engine Description and Operation WP’s.

31. Materials Required List − lists, in alphanumerical order, those materials generally of a consumable nature, complete with part or specification number, required to complete the task detailed in the paragraph (figure 2). Materials required to accomplish tasks referenced out to other WP’s are not included. Materials Required lists are not applicable to Engine Description and Operation WP’s.

32. Figure References − indicate the illustration in which the component or item of equipment, referred to in the text, is shown in relation to the complete assembly.

33. Index Numbers − indicates components or items of equipment within a previously referenced figure; a legend defining nomenclature of index numbers is provided with the relevant figure. Individual index numbers quoted in the text, refer to the last quoted figure number.

34. ILLUSTRATIONS. Illustrations are provided within a WP to support text and to furnish graphic identification of components and support equipment.

35. Part Numbers of components and items of support equipment are only included in illustrations when more than one item illustrated has the same nomenclature. Referencing of individual parts within an illustration may be accomplished either by direct annotation or by the use of index numbers together with a legend.

36. When only one illustration is required to support a complete procedure, the figure reference will be included in the procedure heading. Where more than one illustration is required to support a procedure, the figure reference will appear at first point−of−reference in the text; the user will continue to use the illustration (as required), until reference is made to another illustration.

37. QUALITY ASSURANCE (QA) REQUIREMENTS. Procedures that are essential to equipment performance or to safety of personnel shall be observed or checked by a quality assurance inspector prior to the technician performing the next step. Such procedures are highlighted by the addition of the abbreviation “(QA)” immediately following the procedure step.

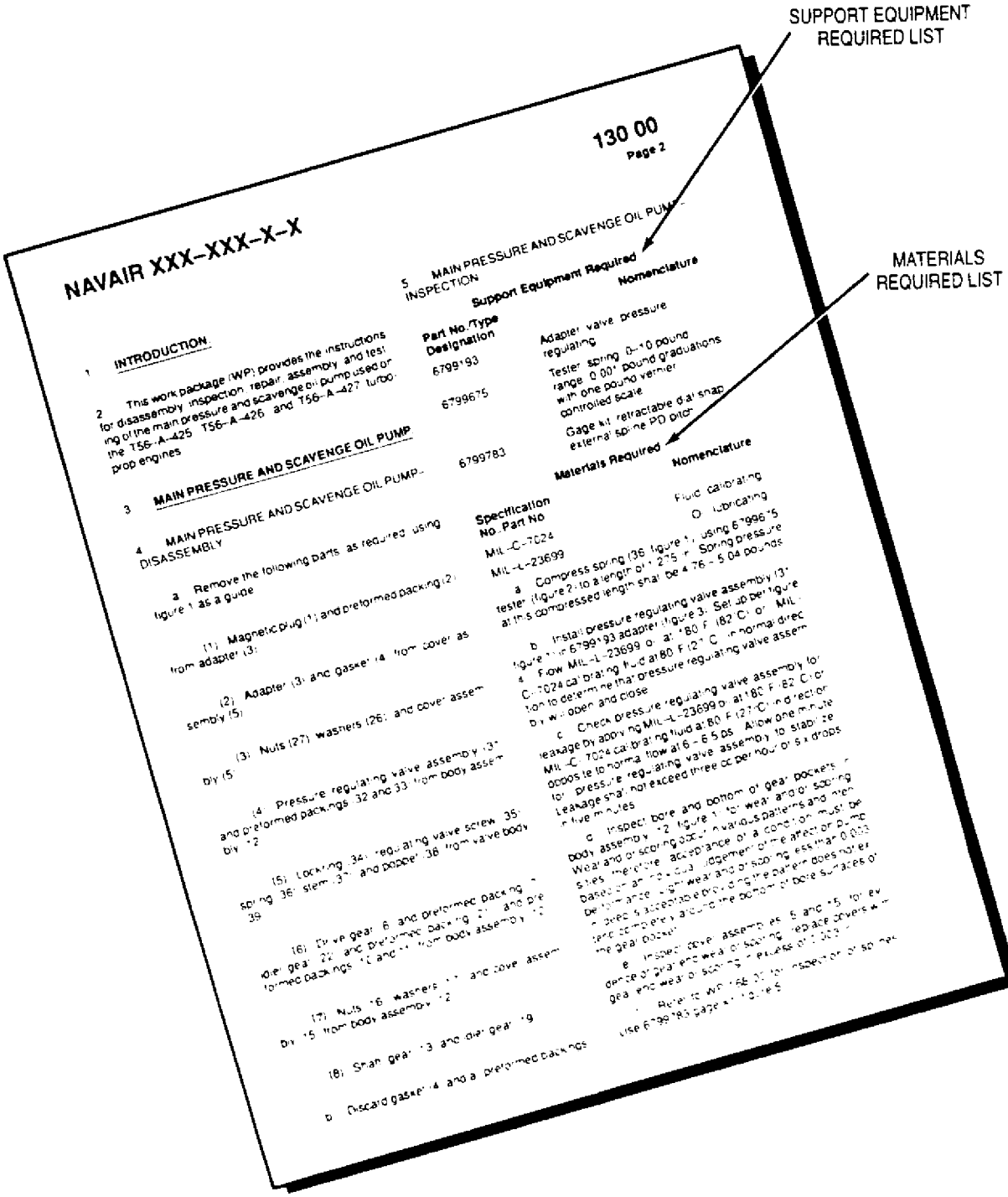

MLS088XA

Figure 2. Work Package Text Page − Details of Standard Format

38. All tasks contained in a procedural step which is followed by the abbreviation (QA) are subject to quality assurance requirements.

39. CHANGE/REVISION. Revisions to WP content are indicated by a change number and date on the top of the WP title page and on each revised page within the WP.

40. The changed text on each revised page is indicated by a change symbol ‘R’ or black bar on the outer margin of the page opposite the revised text.

41. REFERENCES. References to procedures within the same WP by primary paragraph heading:

EXAMPLE

refer INSTALLATION, this WP

Reference may be made to a paragraph by number within a WP where it is unreasonable to reference by title.

42. References to procedures within a WP format manual are by WP number:

EXAMPLE

install electrical cable assembly (WP 109 00)

43. References to procedures in other manuals by publication number:

EXAMPLE

Refer to NAVAIR 01−1A−16.

In this instance the referenced manual is listed in the Reference Material list on the WP title page.

44. Reference to index numbers in illustrations within a paragraph of a WP is made by the index number followed by figure number. When only one figure is referenced, the figure number is used only with the first referenced index number. Additional references are made by index numbers only:

EXAMPLE

Remove nuts (4, figure 1) and washers (5) from bolts (6).

When more than one figure is referenced in a paragraph the above format is followed until the procedure is complete or the sequence is broken by reference to another figure:

EXAMPLE

a. Remove retaining bolts (30, figure 12) and washers (31). Lift air valve (32) from support

b. Disassemble air valve (1, figure 13).

45. Reference to illustrations (without index numbers) within a WP is made by figure number:

EXAMPLE

Install 6796559 puller (figure 7) and —

or

Rivet head shall be flush to 0.010 in. below adjacent surface (figure 2) after —

46. INSPECTION AND REPAIR TABLE DEFINITIONS.

a. Condition: damage, wear, distortion, etc., that is being inspected for.

b. Serviceable Limits: limit to which a condition can be present and the part returned to service without required repair.

(1) Not serviceable: condition in any amount, size, or shape is not acceptable for continued service without repair.

c. Repairable Limits: limit to which a condition can be present and the part repaired to manufacturing limits without affecting structural integrity.

(1) Not repairable: no approved repair procedure.

(2) Exceeds serviceable limits: any condition exceeding the limit set forth in the Serviceable Limits column.

d. Disposition: approved repair method.

(1) Condemn part exceeding serviceable limits: condition can not be repaired and part must be condemned if serviceable limits are exceeded.

47. **ADDITIONAL MANUALS.**

48. The NAVAIR 02B−5DG−1−1 Tubing, Cabling and Clamping Supplement is used with NAVAIR 02B−5DG−6−1. These manuals, in conjunction with NAVAIR 02B−5DG−6−2, provide instructions for Depot Maintenance. Refer to NAVAIR 02B−5DG−4 Illustrated Parts Breakdown when part number identification and USABLE ON CODE is needed to comply with any WP in this manual.

49. **TECHNICAL DIRECTIVES.**

50. Technical Directives, in the form of Power Plant Changes (PPC), may be issued following approval of an Engineering Change Proposal (ECP) by a NAVAIR Change Control Board (CCB).

51. Technical Directives contain instructions and information to direct the accomplishment and recording of a material change, repositioning, modification, or alteration in the characteristics of the equipment to which it applies.

52. Applicable technical directives are incorporated in the relevant WP and, if necessary, procedural steps and/or descriptions are altered to describe both pre− and post− modification configurations.

53. **FLEET SUPPORT TEAM (FST).**

54. The FST is the naval activity having prime engineering cognizance over the aircraft, weapon system, or equipment for which a technical manual is being prepared. The responsibilities of the FST are:

a. To provide technical counsel.

b. To provide data, materials, and equipment as coordinated with the Quality Assurance Division (QAD).

c. To recommend technical inputs to maintenance manuals.

Table 3. Historical Record of Applicable Technical Directives

Type/No.	Date	Title and ECP No.	Date Inc.	Remarks
PPC 122	1 Jul 04	First−Stage Turbine Vane Metal Blade Track	1 Sep 05	——
PPC−114	−−−	15 Micron Oil Filter	13 Jun 97	——

DEPOT MAINTENANCE

CROSS MANUAL REFERENCE

INTERMEDIATE MAINTENANCE MANUAL INFORMATION, STANDARD PRACTICES AND MAINTENANCE PROCEDURES APPLICABLE TO DEPOT MAINTENANCE MANUAL

Reference Material

None

Alphabetical Index

Subject **Page No.**

Description and Principles of Operation 3
Air System 3
Electrical System 3
Engine 3
Engine Monitoring System 3
Fuel System 3
Oil System 3
Introduction 3
Maintenance Procedures 3
Accessory Drive Housing − Removal and Installation 3
Accessory Drive Housing Cover, Gears, Seals, Plugs and Scavenge Pressure Relief Valve − Assembly 3
Accessory Drive Housing Cover, Gears, Seals, Plugs and Scavenge Pressure Relief Valve Disassembly 3
Compressor Assembly − Disassembly 3

Alphabetical Index (contd)

Subject **Page No.**

Parallel Rail Work Stand 3
Preparation for Service and Storage 3
Reduction Gear Unit with Safety Coupling and Torquemeter Assembly − Removal and Installation 3
Torquemeter Anti−Icing Cowl Assembly − Maintenance 3
Torquemeter Unit and Safety Coupling − Removal and Installation 3
Troubleshooting 3
Turbine Unit Assembly − Disassembly 3
Turbine Unit Assembly − Assembly 3
Turbine Unit Assembly − Removal and Installation 3
Standard Practices 3
Assembly and Disassembly 3
Inspection and Non−Destructive Testing (NDT) 3
Repair 3
Safety Precautions 3

Record of Applicable Technical Directives

None

1. **INTRODUCTION.**

2. The paragraph headings in this Work Package (WP) are the titles of intermediate maintenance WP's that apply in entirety to depot maintenance. Reference is made by the intermediate manual number and applicable WP number.

3. **DESCRIPTION AND PRINCIPLES OF OPERATION.**

4. ENGINE DESCRIPTION AND PRINCIPLES OF OPERATION. Refer to NAVAIR 02B−5DG−6−1, WP 005 00.

5. FUEL SYSTEM AND CONTROL SYSTEM DESCRIPTION AND PRINCIPLES OF OPERATION. Refer to NAVAIR 02B−5DG−6−1, WP 006 00.

6. OIL SYSTEM DESCRIPTION AND PRINCIPLES OF OPERATION. Refer to NAVAIR 02B−5DG−6−1, WP 007 00.

7. ELECTRICAL SYSTEM DESCRIPTION AND PRINCIPLES OF OPERATION. Refer to NAVAIR 02B−5DG−6−1, WP 008 00.

8. AIR SYSTEM DESCRIPTION AND PRINCIPLES OF OPERATION. Refer to NAVAIR 02B−5DG−6−1, WP 009 00.

9. ENGINE MONITORING SYSTEM AND PRINCIPLES OF OPERATION. Refer to NAVAIR 02B−5DG−6−1, WP 010 00.

10. **STANDARD PRACTICES.**

11. SAFETY PRECAUTIONS STANDARD PRACTICES. Refer to NAVAIR 02B−5DG−6−1, WP 011 00.

12. INSPECTION AND NON−DESTRUCTIVE TESTING (NDT) STANDARD PRACTICES. Refer to NAVAIR 02B−5DG−6−1, WP 014 00.

13. REPAIR STANDARD PRACTICES. Refer to NAVAIR 02B−5DG−6−1, WP 015 00.

14. ASSEMBLY AND DISASSEMBLY STANDARD PRACTICES. Refer to NAVAIR 02B−5DG−6−1, WP 016 00.

15. **MAINTENANCE PROCEDURES.**

16. PREPARATION FOR SERVICE AND STORAGE. Refer to NAVAIR 02B−5DG−6−1, WP 019 00.

17. MAINTENANCE ON PARALLEL RAIL WORK STAND. Refer to NAVAIR 02B−5DG−6−1, WP 021 00.

18. TROUBLESHOOTING. Refer to NAVAIR 02B−5DG−6−1, WP 025 00.

19. TORQUEMETER ANTI−ICING COWL ASSEMBLY − MAINTENANCE. Refer to NAVAIR 02B−5DG−6−1, WP 026 00.

20. REDUCTION GEAR UNIT WITH SAFETY COUPLING AND TORQUEMETER ASSEMBLY − REMOVAL AND INSTALLATION. Refer to NAVAIR 02B−5DG−6−1, WP 027 00.

21. TORQUEMETER UNIT AND SAFETY COUPLING − REMOVAL AND INSTALLATION. Refer to NAVAIR 02B−5DG−1, WP 028 00.

22. ACCESSORY DRIVE HOUSING − REMOVAL AND INSTALLATION. Refer to NAVAIR 02B−5DG−6−1, WP 029 00.

23. TURBINE UNIT ASSEMBLY − REMOVAL AND INSTALLATION. Refer to NAVAIR 02B−5DG−6−1, WP 030 00.

24. COMPRESSOR ASSEMBLY −DISASSEMBLY. Refer to NAVAIR 02B−5DG−6 1, WP 047 00.

25. ACCESSORY DRIVE HOUSING COVER, GEARS, SEALS, PLUGS AND SCAVENGE PRESSURE RELIEF VALVE − DISASSEMBLY. Refer to NAVAIR 02B−5DG−6−1, WP 042 00.

26. ACCESSORY DRIVE HOUSING COVER, GEARS, SEALS, PLUGS AND SCAVENGE PRESSURE RELIEF VALVE − ASSEMBLY. Refer to NAVAIR 02B−5DG−6−1, WP 044 00.

27. TURBINE UNIT ASSEMBLY − DISASSEMBLY. Refer to NAVAIR 02B−5DG−6−1, WP 053 00.

28. TURBINE UNIT ASSEMBLY − ASSEMBLY. Refer to NAVAIR 02B−5DG−1, WP 055 00.

DEPOT MAINTENANCE

ALPHANUMERICAL LISTING

SUPPORT EQUIPMENT

Reference Material

Introduction 2
Alphanumeric Listing of Support Equipment 2

Record of Applicable Technical Directives

None

1. **INTRODUCTION.**

2. This work package provides a consolidated list of support equipment used throughout this manual.

3. **ALPHANUMERIC LISTING OF SUPPORT EQUIPMENT.**

4. The table is divided into four columns. Explanation of column headings and use of the table follows:

a. Part No./Type Designation − Provides part number or type designation for support equipment. Part numbers are listed alphanumerically.

b. Nomenclature − Provides full name of support equipment.

c. WP Number − Provides a list of all work packages that require the listed item of support equipment. Work packages enclosed in parenthesis are suitable for illustration reference. Items of support equipment not illustrated in specific task work packages will be illustrated in the Supplementary Illustrated Listing.

NOTE

Support equipment listed in this WP shall only be used when specific instruction are found in the maintenance WP. Support equipment shall not be used for any purpose other than the intended function.

Table 1. Support Equipment

Part No./Type Designation	Nomenclature	WP Number
ALA 3D−71163	Tool pressure check	081 00
ALA 3D−71163−1	Plate assembly	081 00
ALA 3D−71163−2	Plate assembly	081 00
ALA 3D−71163−3	Bolt assembly	081 00
GMR	Machine, dynamic balance	026 00
HV2.5	Megohmmeter	128 00
Marker	Tool, controllable vibrating etching	007 00
MB−3 (144 in. 6000 amps)	Demagnetizer (CAGE 37676)	017 00
MIL−B−23958	Brush, cleaning, stainless steel	101 00
Model ATS 100−40	Starter (Airesearch)	020 00
Model	Generator, tachometer	020 00
Model 200S	Honer, Vacu−Blast Super Aero	008 00
Model 255F or 256F	Elcometer thickness gage	043 00
Model PG 100	AVCO plasma unit	043 00
No. 47	Drill	083 00
No. 55	Drill	083 00
No. 62	Drill	083 00
No. 1410	Welch air pump	130 00
PA 141328	Furnace, Pacific Scientific	008 00
PSM−4C	Multimeter	129 00
SG−1 B or SG−100	Plasmadyne spray unit	043 00
SWE 102	Power wrench	032 00, 033 00
Type C	Grinding machine, Landis 22 X 48	026 00

Table 1. Support Equipment (contd)

Part No./Type Designation	Nomenclature	WP Number
Type 3M, 7M, 9M or 10M	METCO plasma spray system	043 00
Type 4E	Gun metallizing	130 00, 077 00
T27341	Puller, solenoid valve seat	121 00
T4289	Fixture, setting, degree rotation	130 00
VE3L	Balance Machine, Schenck−Trebel	030 00
ZB−26	Black light (CAGE 37676)	017 00
0.250−28 UNJF−3B	Tap	104 00
0.500−20 UNJF−3B	Tap	104 00
1−003−150	Filter, 150 Hz	022 00
1−117	Meter, Vibration with 16 Hz and 150 Hz filters	020 00
11−4300−1	Tester, high voltage ignition	125 00
2101	Pencil	029 00
23002214	Puller, feathering shaft bearing	130 00
23002984	Drift−Seal Installation, speed sensitive valve drive shaft	137 00
23004326	Gage, compressor tie−bolt GO/NO GO ring	076 00
23004327	Gage, compressor 0.875−20 thread setting plug	076 00
23004328	Gage, plug	074 00
23005031	Fixture, combustion liner crossover ferrule welding	088 00
23008653	Adapter Set−Curvic, turbine wheel static balance	030 00
23030189	Tester, resistance, thermocouple	127 00
23030228	Arbor, grinding, inner cone propeller brake	041 00
23030254	Fixture, test, scavenge oil pump	116 00
23032404	Spline, starter shaft turning	022 00, 033 00
23032975	Sling, turbine rotor assembly	030 00
23033003	Puller, seal, turbine front labyrinth	029 00
23033008	Shroud, turbine section	020 00
23033011	Template set, compressor blade rework limit (12 per set)	075 00
23033017	Protector, curvic coupling, turbine wheel	029 00, 030 00
23033018	Set, adapter, turb wheel blade assembly and disassembly fixture	030 00
23033018−1	Pilot	030 00
23033018−5	Ring, pressure	029 00, 030 00
23033018−6	Bushing	030 00
23033018−7	Ring, pressure	029 00, 030 00
23033018−8	Ring, pressure	029 00, 030 00
23033018−9	Support, ring	030 00

Table 1. Support Equipment (contd)

Part No./Type Designation	Nomenclature	WP Number
23033018−10	Ring, support	030 00
23033018−11	Ring, support	030 00
23033018−19	Spacer	030 00
23034201	Fixture, checking, accessory drive pads concentricity and squareness	033 00
23034230	Compressor, pinion front bearing outer ring	042 00
23034276	Fixture, heat treat, turbine rear bearing support	101 00
23034277	Fixture, weld, rear turbine bearing support	101 00
23034278	Adapter, inspection, rear turbine bearing support assembly	101 00
23034281	Puller, spacer, first− to second−stage turbine	029 00
23034282	Puller, seal, second− to third− and third− to fourth−stage forward	029 00
23034283	Support, turbine wheel assembly	029 00
23034285	Drift, interstage seal	099 00
23034290	Fixture, holding, turbine rotor	029 00, 030 00
23034291	Fixture, inspection, turbine first−stage vane seal	093 00
23034292	Fixture, inspection, turbine second−stage vane honeycomb	098 00
23034293	Fixture, inspection, turbine third−stage vane honeycomb	098 00
23034294	Fixture, inspection, turbine fourth−stage vane honeycomb	098 00
23034296	Drift, installation, inter−stage inner seal	030 00
23034308	Test stand, fuel nozzle	124 00
23034309	Holder, propeller brake outer member	041 00
23034310	Puller, bearing, gearbox pinion front (hydraulic)	042 00
23034311	Holder, pinion gear assembly	042 00
23034314	Support, checking, turbine rotor	030 00
23034315	Spacer ring, fixture holding, grit blast	071 00
23034316	Spacer, grit blast, compressor housing assembly axial split line	071 00
23034317	Adapter, grit blast	071 00
23034318	Template, machining (vert lathe) aluminum coating	071 00
23034319	Fixture, machining alum coating, compressor case housing assembly	071 00
23034320	Support Plates, stress relieve compressor case housing assembly	071 00
23034322	Spacer Ring, adapter compressor housing assembly metallizing, front	071 00
23034323	Adapter, compressor housing assembly metallizing rear	071 00
23034325	Kit, inspection, turbine wheel assemblies	030 00
23034326	Mask, dust, first−stage vane seal grinding	093 00
23034327	Gage, measurement, turbine rotor tiebolt stretch	030 00
23034330	Gage, pinion gear front bearing (SKF/MRC) ring	138 00

Table 1. Support Equipment (contd)

Part No./Type Designation	Nomenclature	WP Number
23034330	Gage, pinion gear front bearing (SKF/MRC) ring	138 00
23034331	Adapter, roller bearing internal clearance checking ring	138 00
23034332	Fixture, boring	042 00
23034335	Fixture, machining and inspection, turbine front outer	099 00
23034336	Drift, installation, turbine front outer seal insert	099 00
23034337	Fixture, inspection and machine, turbine front inner honeycomb seal	096 00
23034338	Drift, installation, turbine front inner honeycomb	096 00
23034349	Fixture, holding compressor housing vane height setting	028 00
23034350	Gage Block Unit, compressor housing assembly, vane height	028 00
23034352	Gage, checking, air inlet hsg, pilot sleeve bore ID	068 00
23034353	Master, gage checking, air inlet housing pilot ID	068 00
23034354	Master, gage, checking, air inlet housing pilot OD	068 00
23034355	Gage, checking air inlet housing pilot OD	068 00
23034357	Master, gage, checking, air inlet housing pilot sleeve	068 00
23034358	Adapter, support, turbine wheel static balance curvic	030 00
23034359	Fixture, holding, prop brake face grooving	041 00
23034367	Kit, inspection, adapter	097 00
23034372	Gage, facing ID plug	041 00
23034373	Protector, thirteenth−stage compressor wheel web	074 00
23034374	Protector, thirteenth−stage compressor wheel blade	074 00
23037900	Mask, tenth−stage bypass groove	071 00
23037901	Mast, fifth−stage bypass groove	071 00
23037902	Step block, compressor rotor blade OD check	026 00
23037905	Adapter, balance, spur main drive gear static	043 00
23037908	Bar, test	026 00
23037914	Separator, compressor, rotor wheel assembly	025 00
23037915	Separator, compressor, rotor wheel assembly	025 00
23037916	Separator, compressor, rotor wheel assembly	025 00
23037917	Separator, compressor, rotor wheel assembly	025 00
23037919	Mask, grit blast and metallize−compressor housing vane assembly, first−stage	071 00
23037920	Mask, grit blast and metallize−compressor housing vane assembly, second−stage	071 00
23037921	Mask, grit blast and metallize−compressor housing vane assembly, third−stage	071 00
23037922	Mask, grit blast and metallize−compressor housing vane assembly, fourth−stage	071 00

Table 1. Support Equipment (contd)

Part No./Type Designation	Nomenclature	WP Number
23037923	Mask, grit blast and metallize−compressor housing vane assembly, fifth−stage	071 00
23037924	Mask, grit blast and metallize−compressor housing vane assembly, sixth−stage	071 00
23037925	Mask, grit blast and metallize−compressor housing vane assembly, seventh−stage	071 00
23037926	Mask, grit blast and metallize−compressor housing vane assembly, eighth−stage	071 00
23037927	Mask, grit blast and metallize−compressor housing vane assembly, ninth−stage	071 00
23037928	Mask, grit blast and metallize− compressor housing vane assembly, tenth−stage	071 00
23037929	Mask, grit blast and metallize−compressor housing vane assembly, eleventh−stage	071 00
23037930	Mask, grit blast and metallize−compressor housing vane assembly, twelfth−stage	071 00
23037931	Mask, grit blast and metallize−compressor housing vane assembly, thirteenth−stage	071 00
23037944	Fixture, balane, compressor rotor assy static	026 00
23038099	Adapter, compressor rotor fourteenth−stage end press	026 00
23051179	Case, containment, pinion shaft and puller	042 00
23051221	Puller, hydraulic, propeller shaft thrust bearing and scavenge pump drive gear	032 00
23051225	Fixture, first−stage vane assembly	093 00
23051228	Adapter, compressor vibration pickup mounting	020 00
23055727	Adapter, test stand	041 00
23055767	Fixture, inspection, compressor rotor	026 00
23055776	Fixture, grinding, compressor rotor	026 00
2550961	Fixture, test	034 00
260−6LXP	Multimeter	128 00, 132 00, 133 00
281184	Wrench, spanner	137 00
2308	Puller, tee handle	032 00
3435	Sling, compressor rotor assembly	026 00
3482	Holder, compressor rotor forward spline	025 00
3738	Holder, starter shaft	032 00
4−106−0001	Transducer (Pickup), vertical vibration	020 00
4−106−0002	Transducer (Pickup), horizontal vibration	022 00
4E, 8E, 10E	Metco gun (CAGE 39918)	068 00
6171X−PG−AF1	Assembly Fixture, potentiometer and gear	130 00

Table 1. Support Equipment (contd)

Part No./Type Designation	Nomenclature	WP Number
6787326	Cover	081 00
6795794	Probe, temperature, compressor air inlet	020 00
6795798	Adapter, attaching, diffuser to 6796870 mounting adapter	020 00
6795871	Fixture, assembly, speed cal−vibration pin, fly− weight carrier, speed sensitive valve	137 00
6795872	Fixture, installation and removal flyweight carrier snap ring	137 00
6795873	Fixture, illustration, roll− pin, fly−weight carrier, speed sensitive valve	137 00
6795893	Fixture, dimpling, cup washer, 2.060 O.D.	033 00
6795894	Wrench, end slot spanner nut	033 00
6795905	Stand, turnover, engine component	033 00
6795908	Drift, installation, reduction gear main oil pump body	114 00
6795913	Jig, drill, reduction gear main oil pump cover bushing lock pin hole	114 00
6795914	Gage, flush pin, reduction gear main oil pump bushing c'sink depth (large)	114 00
6795915	Gage, flush pin, reduction gear main oil pump bushing c'sink depth (small)	114 00
6796010	Lift, propeller shaft and planet gear assembly	032 00
6796014	Index Plate, planet gear	032 00, 033 00
6796019	Wrench, accessory drive shaft bearing retainer nut	033 00
6796046	Wrench, pinion input gear rear bearing retainer nut	042 00
6796074	Wrench, oil pump drive journal and tachometer drive idler spanner nut	033 00
6796089	Attachment, prop brake release	033 00
6796091	Drill jig, compressor rotor fourteenth−stage balance weight	026 00
6796138	Drift, safety coupling outer member shaft bushing removal	042 00
6796182	Spline, starter shaft turning	033 00
6796185	Drift, safety coupling outer member shaft bushing installation	042 00
6796187	Compressor, safety coupling inner member	065 00
6796195	Drift, safety coupling disassembly	065 00
6796211	Installation Plate, accessories bearings	137 00
6796236	Puller, tee handle, 10−32	025 00
6796246	Screen, test, air inlet	020 00
6796247	Gage, fourteenth−stage compressor wheel permanent dish	026 00, 074 00
6796249	Support, bearing removal	137 00
6796253	Support, pinion gear	042 00
6796263	Holding Fixture, turbine coupling shaft assembly	109 00
6796264	Wrench, turbine coupling shaft assembly	109 00

Table 1. Support Equipment (contd)

Part No./Type Designation	Nomenclature	WP Number
6796267	Drift, turbine coupling shaft spacer disassembly	109 00
6796268	Holder, turbine coupling shaft assembly spacer	109 00
6796269	Drift, turbine coupling shaft adapter assembly	109 00
6796270	Drift, roll, turbine coupling shaft bolt spacer	109 00
6796272	Holder, turbine coupling shaft assembly	109 00
6796300	Cover, propeller shaft	032 00
6796303	Cover, compressor air inlet housing and test screen	020 00
6796366	Probe, pressure, compressor inlet air	020 00
6796371	Gage, propeller brake facing rivet countersink depth	041 00
6796372	Gage, propeller brake facing rivet head depth	041 00
6796373	Gage, propeller brake facing trim	041 00
6796377	Gage, propeller brake facing groove depth	041 00
6796378	Gage, propeller brake facing concentricity and angle	041 00
6796380	Fixture, drill, propeller brake outer member assembly	041 00
6796441	Drill, special, propeller brake facing rivet hole	041 00
6796467	Puller, propeller shaft plug	032 00
6796472	Puller, planet gear rear carrier	032 00
6796513	Compressor, reverse torque springs	032 00, 033 00
6796540	Adapter, lifting, turbine rotor	026 00
6796547	Protector, compressor stator vane assemblies	027 00
6796558	Drift, scavenge pump drive gear	042 00
6796559	Puller, drive gear scavenge pump	042 00
6796561	Adapter, pivot, power wrench	032 00, 033 00
6796565	Pusher, planet rear carrier	032 00
6796566	Puller, planet gear and bearing assembly	032 00
6796588	Expander, drive shaft seal	137 00
6796589	Plate, puller, speed switch drive shaft assembly bearing	137 00
6796590	Drift, speed switch drive shaft bearing	137 00
6796591	Holder, speed switch drive shaft assembly	137 00
6796592	Wrench spanner, speed switch drive shaft bearing retaining nut	137 00
6796611	Bar, aligning, combustion liner crossover tube flange	088 00
6796616	Puller, sun gear lubrication tube	032 00
6796631	Fixture, torque, power wrench	032 00, 033 00
6796634	Holder, planet gear bearing journal	032 00, 033 00
6796641	Gage, plug, crossover tube	088 00
6796646	Machine, compressor housing assembly metallizing	071 00
6796647	Machine, grit blast compressor housing assembly	071 00

Table 1. Support Equipment (contd)

Part No./Type Designation	Nomenclature	WP Number
6796659	Template, transition exit	088 00
6796663	Adapter, compressor housing assembly metallizing front	071 00
6796665	Adapter, lifting, compressor housing assembly metallizing	071 00
6796667	Fixture, holding	071 00
6796691	Retainer, prop shaft bearing roller	032 00, 033 00
6796727	Adapter, mounting vertical vibration pickup (use with 6799238)	020 00
6796728	Support, safety coupling disassembly	065 00
6796739	Gage, spacing, propeller brake facing	041 00
6796740	Gage, width, propeller brake facing groove	041 00
6796753	Fixture, lathe, oil pump gear bushing rework	114 00
6796770	Fixture, test, prop brake assembly	041 00
6796784	Stand, engine overhaul	020 00, 021 00
6796793	Fixture, checking, combustion liner assembly	088 00
6796795	Fixture, holding, combustion liner assembly	088 00
6796797	Machine, balance, rotating static, vertical	026 00, 043 00
6796800	Adapter, dial, turbine and compressor wheel static balance	026 00
6796801	Adapter, support, compressor wheel static balance	026 00
6796802	Adapter, collet, static (second through thirteenth−stages)	026 00
6796807	Shield, heat, torquemeter outer member	064 00
6796820	Adapter, attaching	033 00
6796832	Stand, reduction gear assembly transportation and storage	022 00
6796833	Stand, compressor rotor, transportation and storage	025 00, 026 00
6796834	Stand, propeller shaft and planetary gear	032 00, 033 00
6796835	Protector, planet gear and bearing assembly	032 00, 033 00, 051 00
6796836	Stand, transportation and storage, turbine rotor	029 00, 030 00
6796859	Adapter, engine attaching 6796869 adapter, trunnion air inlet housing mounting pad to 6796784	020 00
6796864	Protector, fourteen−stage wheel shot−peen hub	074 00
6796836−202	Adapter, support, fourth−stage turbine wheel	030 00
6796865	Protector, fourteenth−stage wheel shot−peen rim	074 00
6796869	Adapter, trunnion, air inlet housing mounting pad to 6796784 stand	020 00
6796870	Adapter, mounting diffuser mounting bracket to 6796784 stand	020 00
6796872	Fixture, assembly and disassembly, compressor rotor	025 00, 026 00
6796877	Puller, propeller shaft thrust bearing and scavenge pump drive gear	032 00
6796886	Cover, compressor rotor	026 00
6796889	Fixture, rod end internal clearance checking	139 00

Table 1. Support Equipment (contd)

Part No./Type Designation	Nomenclature	WP Number
6796891	Adapter, torque reduction gear filter	115 00
6796894	Protector, compressor rotor first−stage hub	025 00
6796895	Bar, pry compressor rotor first−stage blade retaining ring	025 00
6796898	Press, hydraulic, 20 ton capacity	026 00
6796899	Adapter, press, compressor rotor first−stage end	026 00
6796937	Fixture, check, pinion gear bushing concentricity	042 00
6796940	Gage, ring, compressor front bearing	138 00
6796945	Fixture, inspection, out of round bearing outer race	138 00
6796964	Fixture, check, bearing internal clearance	138 00
6796974	Pliers, removal and installation, low pressure fuel filter retaining ring	136 00
6796975	Depressor, spring low pressure fuel filter element support	136 00
6796978	Adapter, pinion gear rear bearing roller bearing internal clearance checking ring	138 00
6796984	Fixture, pneumatic testing, compressor air inlet housing assembly	068 00
6796985	Fixture, hydraulic pressure test, compressor air inlet housing assembly	068 00
6796987	Stand, turnover, engine component	033 00
6796988	Fixture, installation, torquemeter bronze sleeve	064 00
6796997	Fixture, lapping, safety coupling	065 00
6796989	Gage, pinion gear front bearing (SKF/MRC) ring	138 00
6796992	Expander, teflon tubing	128 00, 132 00
6797241	Duct, air inlet, engine test	021 00
6797342	Heater, turbine rotor wheel assembly	035 00, 036 00
6797564	Gage, slug	042 00
6797589	Fixture, lock tab bending, sun gear hub	033 00
6797595	Half Bearing, front and rear, propeller brake assembly dynamic balance	041 00
6797596	Fixture, balance, propeller brake assembly dynamic	041 00
6797602	Plate, clamp, bearing	138 00
6797603	Plate, guide, roller bearing	138 00
6797604	Gage, ring, compressor front	138 00
6797609	Adapter, ring, roller bearing internal clearance checking	138 00
6797633	Pulley, drive, propeller brake assembly dynamic balance	041 00
6797634	Pulley, propeller brake assembly dynamic balance	041 00
6797635	Belt, drive, propeller brake assembly dynamic balance	041 00
6797636	Belt, propeller brake assembly dynamic balance	041 00
6797642	Plate, clamp, roller or ball bearing inspection	138 00
6797643	Plate, guide, roller bearing inspection	138 00

Table 1. Support Equipment (contd)

Part No./Type Designation	Nomenclature	WP Number
6797645	Gage, ring, main drive gear bearing	138 00
6797646	Plate, clamp, roller or ball bearing inspection	138 00
6797647	Plate, guide, roller bearing inspection	138 00
6797648	Gage, pinion gear front bearing ring (Hyatt)	138 00
6797649	Plate, guide, roller bearing inspection	138 00
6797651	Plate, clamp, roller or ball bearing inspection	138 00
6797652	Plate, guide, roller bearing inspection	138 00
6797654	Adapter, ring, roller bearing internal clearance checking	138 00
6797656	Adapter, ring, ball bearing internal radial clearance checking	138 00
6797657	Plate, guide, ball bearing inspection	138 00
6797658	Adapter, ring, roller bearing internal clearance checking	138 00
6797661	Jig, drill, turbine coupling shaft assembly lack pin	109 00
6797662	Puller, turbine coupling shaft adapter	109 00
6797663	Holder, turbine, coupling shaft	109 00
6797692	Adapter, lifting	020 00
6797706	Adapter, trunnion	033 00
6797727	Reamer, fuel filter relief valve seat (600 included angle)	136 00
6797728	Reamer, fuel filter relief valve seat (flat bottom)	136 00
6797729	Reamer, fuel filter relief valve seat (120° included angle)	136 00
6797744	Adapter, lifting, engine test dolly	020 00
6797754	Fixture, puller, mid bearing torquemeter shaft	064 00
6797755	Wrench, spanner, torquemeter inner shaft plug	064 00
6797757	Plate, inner ring puller	064 00
6797775	Adapter, balance, torquemeter and safety coupling assembly rear dynamic	066 00
6797776	Adapter, balance, torquemeter and safety coupling assembly front dynamic	066 00
6797777	Half Bearing, front and rear torquemeter and safety coupling assembly dynamic balance	066 00
6797780	Pulley, torquemeter and safety coupling assembly dynamic balance	066 00
6797781	Belt, torquemeter and safety coupling assembly dynamic balance drive	066 00
6797782	Pulley, drive, torquemeter and safety coupling assembly dynamic balance	066 00
6797783	Belt, drive, torquemeter and safety coupling assembly dynamic balance	066 00
6797786	Fixture, alignment, torquemeter inner and outer shaft	064 00
6797788	Wrench, spline, planet journal rear retaining nut	032 00, 033 00

Table 1. Support Equipment (contd)

Part No./Type Designation	Nomenclature	WP Number
6797876	Plate, installation and puller, mid bearing torquemeter flanged open sleeve	064 00
6797877	Pusher and Puller, mid bearing torquemeter forward fiber sleeve	064 00
6797878	Drift, mid bearing torquemeter inner shaft	064 00
6797879	Support, mid bearing torquemeter shaft assembly	064 00
6797880	Holder, mid bearing torquemeter spline	064 00
6797897	Wrench, nut, pinion gear front bearing inner race retaining spanner	042 00
6797903	Fixture, check, safety coupling assembly torque	065 00
6797910	Adapter, mounting, reduction gear vibration pickup	020 00
6797915	Adapter, collet, reduction gear main drive gear	043 00
6797917	Fixture, holding, planet gear assembly	051 00
6797926	Adapter, checking, planet gear and bearing assembly internal clearance	138 00
6797950	Protector, propeller shaft retaining threads	020 00
6797958	Fixture, milling	101 00
6797971	Fixture, holding, compressor air inlet housing assembly	068 00
6797978	Gage, angle and diameter, propeller brake inner cone	041 00
6797983	Punch, swage, torquemeter external pickup block attaching bolt	063 00
6797984	Support, torquemeter external pickup block attaching bolt swaging	063 00
6798009	Fixture, inspection, turbine rotor assembly	030 00
6798091	Adapter, test, oil pump	113 00
6798160	Adapter, lifting reduction gear assembly	022 00
6798183	Machine, horizontal rotating balance	066 00, 109 00, 041 00
6798224	Wrench, end slot spanner nut	032 00
6798251−1 thru −67	Tap, oversize	014 00, 015 00
6798815	Mask, diffuser scavenge sump	081 00
6798844	Puller, compressor front bearing cage	011 00, 068 00
6798962	Template, locating, pinion front and rear carrier bearing cage bores	039 00
6799057	Adapter, test, oil pump	111 00
6799094	Stand Assembly, test, speed decreaser gear assembly	022 00
6799150	Test Set, electrical component checkout	126 00
6799163	Adapter, test, fuel filter	121 00
6799191	Adapter, valve, burner drain	119 00
6799192	Adapter, test, fuel pump	119 00
6799193	Adapter, valve, pressure regulating	111 00
6799198	Adapter, valve, air bleed	120 00

Table 1. Support Equipment (contd)

Part No./Type Designation	Nomenclature	WP Number
6799201	Fixture, pressure test, disposable paper element fuel filter assembly	136 00
6799205	Fixture, adjusting, coordinator potentiometer	130 00
6799206	Stand assembly, test, fuel accessories	117 00, 121 00, 123 00
6799238	Isolator, heat, vibration pickup (use with 6796727)	020 00
6799286	Stand, test, coordinator	130 00
6799328	Fixture, coordinator holding	130 00
6799330	Bushing, coordinator shaft adapter	130 00
6799331	Adapter, coordinator shaft	130 00
6799335	Fixture, positioning, coordinator	130 00
6799363	Adapter, test, reduction gear pressure relief valve	117 00
6799377	Puller, speed sensitive valve plug orifice	137 00
6799515	Drift, installation, reduction gear main oil pump body and cover	114 00
6799516	Jig, ream, reduction gear oil pump cover	114 00
6799517	Jig, ream, reduction gear oil pump body	114 00
6799520	Fixture, inspection, turbine rear bearing support	101 00
6799523	Adapter, trunnion, turbine rotor stand	029 00
6799535	Wrench, spanner end slot spanner nut	033 00
6799536	Wrench, spanner, propeller brake outer member assembly retainer nut	041 00
6799537	Fixture, dimpling cup washer	033 00
6799572	Fixture, pressure test, compressor diffuser, pneumatic	081 00
6799573	Gage, shim installation measurement, air inlet housing	068 00, 077 00
6799575	Fixture, heating, torquemeter outer member	064 00
6799576	Gage, P.D. dial bore, internal spline	047 00
6799577	Gage, P.D. dial bore, internal spline	047 00
6799578	Gage, P.D. dial bore, internal spline	047 00
6799579	Gage, P.D. dial bore, internal spline	047 00
6799593	Gage, go, and no go, reduction gear main oil pump body	114 00
6799594	Gage, go and no go, reduction gear main oil pump body and cover	114 00
6799595	Fixture, concentricity checking, compressor, diffuser	068 00, 081 00
6799597	Fixture, pressure test, air inlet housing	068 00
6799615	Wrench, spanner nut, prop shaft flange to rear carrier flange bolt	032 00
6799616	Fixture, solder pouring, seal assembly, front compressor labyrinth	069 00
6799617	Fixture, tinning, seal assembly, front compressor labyrinth	069 00
6799618	Fixture, machining, seal assembly front compressor labyrinth	069 00
6799619	Adapter, lifting, turbine rotor	029 00, 030 00

Table 1. Support Equipment (contd)

Part No./Type Designation	Nomenclature	WP Number
6799627	Fixture, assembly and disassembly, turbine wheel blades	029 00, 030 00
6799629	Fixture, checking, compressor rotor labyrinth seal (rear)	082 00
6799630	Fixture, checking, compressor rotor labyrinth seal (front)	069 00
6799631	Gage Set, compressor rear labyrinth seal stator step depth	082 00
6799632	Fixture, machining, compressor rear labyrinth seal secondary	082 00
6799633	Fixture, machining, compressor rear labyrinth seal primary stator	082 00
6799643−100	Puller, bearing, gear box pinion gear	042 00
6799645	Protector, extension shaft housing assembly	077 00
6799647	Adapter, checking, air inlet housing assembly	068 00
6799669	Pliers, forming, air inlet vane trailing edge	070 00
6799671	Broach, spline, compressor side bevel gear	047 00
6799672	Mask, plating, compressor side gear spline	047 00
6799675	Tester, spring, 0−10 pound range, 0.001 pound graduations with one (1) pound vernier controlled scale	111 00, 118 00, 122 00, 123 00, 137 00
6799676	Tester, spring, 0−150 pound range, 1/4 pound graduations	114 00, 117 00, 130 00, 134 00, 136 00, 140 00
6799697	Fixture, broach, compressor side gear internal spline	047 00
6799718	Fixture, inspection, turbine wheel	030 00, 097 00
6799723	Adapter, locating combustion liner assembly transition section	088 00
6799724	Template, contour, combustion liner assembly transition section exit	088 00
6799727	Adapter, locating, combustion, liner assembly transition section	088 00
6799755	Plate, guide, roller bearing	138 00
6799756	Adapter, ring, roller bearing internal clearance checking	138 00
6799757	Plate, clamp, bearing roller	138 00
6799764	Adapter	033 00
6799780	Fixture, weld, igniter ferrule mount assembly	088 00
6799782	Lifting adapter, rear housing reduction gear	033 00
6799783	Gage Kit, retractable dial snap, external spline P D.	111 00, 047 00
6799784	Gage Kit, retractable dial snap, external spline P.D.	047 00
6799795	Gage, ring, main drive gar bearing	138 00
6799801	Fixture, ream, external scavenge oil pump bushing	113 00
6799802	Gage, plug, external scavenge oil pump bushing “Go No Go”	113 00
6799817	Fixture, pressure test, inner combustion casing assembly	091 00
6799818	Fixture, pressure test, inner combustion chamber casing assembly	090 00
6799821	Gage, ring, torquemeter mid bearing	138 00
6799822	Wrench, spline, planet journal rear retaining nut	032 00, 033 00

Table 1. Support Equipment (contd)

Part No./Type Designation	Nomenclature	WP Number
6799823	Adapter, power wrench, planet journal rear retaining nut	032 00, 033 00
6799826	Plate, support, power wrench adapter	032 00, 033 00
6799837	Fixture, checking, turbine rotor labyrinth seals	096 00, 097 00
6799838	Wrench, spanner, reduction gear oil pump pressure adjusting valve threaded bushing	114 00
6799866	Stand assembly, test, fuel accessories	034 00, 067 00, 117 00, 119 00, 121 00, 123 00
6799891	Fixture, welding, diffuser	081 00
6799892	Fixture, ring and clamp, diffuser	081 00
6799898	Adapter Kit, checking, turbine rotor labyrinth seals	097 00
6799961	Plate, pressing, compressor diffuser inner casing sleeve	081 00
6849586	Cover	081 00
6872235	Puller, side gear bearing cage	011 00, 068 00
6872245	Gage, internal spline	041 00
6872246	Drift, reduction gear oil pump flanged bushings lock pin hole	114 00
6872253	Jig, drill, reduction gear oil pump flanged bushings lock pin hole	114 00
6872254	Jig, drill, oil pump body flanged bushings lock pin hole	114 00
6897862	Gage, compressor front bearing ring	138 00
6893547	Stand test, coordinator control	130 00
6897884	Heater, air, compressor rotor wheel assembly	026 00
7057	Stand Assembly, test, lube and scavenge pump	111 00, 113 00, 114 00, 116 00
7059	Adapter, test oil pump	114 00
——	Ammeter	132 00
——	Brush, cleaning (rifle bore)	069 00
——	Brush, wire	071 00
——	Brush, wire, stainless steel	043 00
——	Cabinet, shot peening (Wheelapeen or Pneumatic air type)	074 00
——	Dial indicator Wheatstone bridge or equivalent	133 00
——	Disk, sanding	043 00
——	Faceshield	080 00
——	File, rotary	101 00
——	Fixture, automated	043 00
——	Fixture, Special test shaft, reduction gear oil pump	114 00
——	Furnace, circulating	018 00
——	Furnace, diffusion (hydrogen or argon bell)	018 00
——	Gage, angle and diameter, inner core	041 00

Table 1. Support Equipment (contd)

Part No./Type Designation	Nomenclature	WP Number
——	Gage, feeler, 0.001 in.	101 00, 136 00
——	Gage, feeler (0.032 in.)	136 00
——	Gage, radius, standard template	065 00
——	Generator, tachometer (2)	020 00
——	Glass, magnifying (3x min.)	108 00
——	Gloves, insulated	018 00, 032 00, 033 00, 039 00, 041 00, 042 00, 064 00, 080 00, 081 00, 093 00, 101 00
——	Gloves, lint−free	043 00, 051 00
——	Grinder, air	008 00
——	Grinder, (Landis Type C, 22 x 48)	026 00
——	Indicator, dial	033 00, 042 00, 130 00
——	Indicator, dial and weighted base	033 00
——	Machine, Roto tumble	008 00
——	Magnifier (10x)	017 00, 018 00, 038 00, 074 00
——	Magnifier (500x)	018 00
——	Megger, 500 volt	133 00
——	Megommeter	132 00
——	Metallizing machine (CAGE 39918)	018 00
——	Micrometers, outside	047 00
——	Mirror, dental (45° angle/1 in. dia/ 8−10 in. handle)	042 00
——	Mold, two piece	057 00
——	Oven	133 00
——	Pins, gage	047 00
——	Plate, surface	033 00
——	Power supply	132 00
——	Pyrometer, contact	043 00
——	Scribe, 0.030 radius	138 00
——	Scribe, 0.060 radius	138 00
——	Scribe, 0.080 radius	138 00
——	Shadowgraph	065 00
——	Stone	043 00
——	Stylus, 0.0001 in. max radius	046 00

Table 1. Support Equipment (contd)

Part No./Type Designation	Nomenclature	WP Number
——	Tester, high voltage ignition	125 00
——	Tip, torch	115 00
——	Torch, hand (or equivalent)	069 00
——	Torch, oxy−acetylene	115 00
——	V−Block	042 00
——	Voltmeter	132 00
——	Wheel, diamond, cone	093 00
——	Wheel, grinding	018 00
——	Wrench, torque (0−25 lb. in.)	116 00
——	Wrench, torque (0−50 lb. in.)	067 00, 122 00, 137 00
——	Wrench, torque (50−100 lb. in.)	130 00
——	Wrench, torque (0−100 lb. in.)	030 00, 121 00, 130 00, 137 00
——	Wrench, torque (0−200 lb. in.)	041 00, 063 00, 114 00
——	Wrench, torque (100−200 lb. in.)	121 00
——	Wrench, torque (0−150 lb. in.)	033 00, 093 00, 114 00
——	Wrench, torque (0−300 lb. in.)	020 00, 033 00, 064 00, 137 00
——	Wrench, torque (0−400 lb. in.)	020 00
——	Wrench, torque (0−500 lb. in.)	021 00, 022 00
——	Wrench, torque (0−600 lb. in.)	030 00, 042 00
——	Wrench, torque (0−750 lb. in.)	114 00
——	Wrench, torque (100−200 lb. in.)	121 00
——	Wrench, torque (250−600 lb. in.)	121 00
——	Wrench, torque (500−1500 lb. in.)	033 00
——	Wrench, torque (500−1500 lb. in.)	033 00
——	Wrench, torque (500−2000 lb. ft.)	033 00

DEPOT MAINTENANCE

ALPHANUMERICAL LISTING

MATERIALS REQUIRED

Reference Material

List of Specifications and Standards . . . . . NAVAIR 00−25−544

Alphabetical Index

Subject **Page No.**

General 2
Materials List 2

Record of Applicable Technical Directives

None

1. **GENERAL.**

2. The materials listed in this work package were accumulated from the other work packages in the depot maintenance manual. They are expendable items and provisioned consumable materials that are required for overhaul and repair. Depot maintenance also uses NAVAIR 02B−5DG−6−1, in which WP 004 00 materials list applies to depot as required. Parts which are discarded and replaced are also identified in the illustrated parts breakdown, NAVAIR 02B−5DG−4.

3. **MATERIALS LIST.**

Materials Required

Specification No./Part No.	Nomenclature
——	Abrasive, aluminum oxide (100 grit)
——	Abrasive, aluminum oxide 120 mesh (CAGE 10647 and 44197)
O−A−51	Acetone
O−A−76	Acid, glacial acetic
O−H−765	Acid, hydrochloric
——	Acid, muriatic
WC 100	Actithane paint (CAGE 11931)
——	Activate−Activator No. 2 (CAGE 13929)
——	Activate−Activator No. 3 (CAGE 13929)
Chemlock No. 220	Adhesive (CAGE 08CC3)
Resiweld 7111	Adhesive (CAGE 92528)
——	Agent, wetting
——	AL 123 powder (CAGE 4G314)
——	AL 131 powder (CAGE 4G314)
MIL−A−6091	Alcohol, denatured
O−E−760	Alcohol, denatured
TT−I−735	Alcohol, isopropyl
O−M−232	Alcohol, methyl
——	Alkaline permaganate
No. 163E	Alloy, coat

Materials Required (contd)

Specification No./Part No.	Nomenclature
AMS 4434	Alloy, magnesium
A6−10	Almen Strip
MIL−C−5541	Alodine No. 1200 (CAGE 84063)
——	Aluminum
QQ−A−225/8	Aluminum Alloy 6061
——	Aluminum or Magnesium
MIL−A−21380 Type I	Aluminum Oxide 220 or 240 mesh
AMS 2471	Anodize
NS165	Anti−seize Compound (Never Seez)
MIL−A−18455	Argon, technical
——	Babbitt
AMS 6265	Bar, steel
AMS 6267	Bar, steel
QC−S−763, Cl 310, Cond. A	Bar, steel
MIL−B−121, Grade A, type II	Barrier material, grease−proofed, waterproofed, flexible
AMS 4928	Bars, forgings and rings
AMS 5645	Bars, forgings, tubing and rings
AMS 5651	Bars, forgings, tubing and rings
——	Battery, DC dry cell
6816364	Bearing, sleeve
AMS 2485	Black oxide
——	Blanket, asbestos
6792745	Bolt
AN178CH11A	Bolt (0.375−24)
Metco 405	Bonding material (CAGE 39918)
MIL−B−23958	Brush, cleaning
——	Brush, corrosion resistant, wire
——	Brush, long handled wire
——	Brush, nylon bristle
——	Brush, soft bristled
——	Brush, soft wire
——	Brush, stainless steel 1/4 in. shank

Materials Required (contd)

Specification No./Part No.	Nomenclature
——	Brush, wire, corrosion resistant
678281	Bushing
6726745−6	Bushing (AR)
6871623	Bushing (AR)
6871625	Bushing (AR)
6809498	Bushing, delivery flange
6809498−1	Bushing, delivery flange
6809498−2	Bushing, delivery flange
6843526	Bushing, NTS actuator rod
MS17319−280	Bushing, screw
6871626	Bushing, stepped sleeve
——	Cadmium (as metal)
6877390−1	Cage, nose bearing
——	Carbide, Silicone (Grit #325 mesh)
——	Carborundum (Grit #220 mesh)
——	Carborundum (Grit #280 mesh)
——	Casting, leaded bronze
AMS 4842	Casting, leaded bronze
MIL−C−5541	Chemical, conversion coating
——	Chips, No. 4 granite
——	Chips, No. 5 granite
——	Chips, Roto−Finish granite, No. 6 (CAGE 94942)
——	Chromic acid (H2CrO4)
P−C−535	Cleaner, alkaline
——	Cloth, 325 grit
——	Cloth, 400 grit
A−A−1206	Cloth, crocus
A−A−1049	Cloth, emery
——	Cloth, emery 400 grit
——	Cloth, emery 500 grit
——	Cloth, lint−free
MIL−C−85043	Cloth, low lint
No. 163E	Coating, alloy (CAGE 71543)
AMS 5788	Coating, alloy No. 6 rod
Alseal 500	Coating, aluminum

Materials Required (contd)

Specification No./Part No.	Nomenclature
SerMetel 196	Coating, aluminum (CAGE 78710)
SerMetel W	Coating, aluminum (CAGE 78710)
Alseal 518	Coating, aluminum oxide
AMS 3135	Coating, silicone resin
Sprabronze AA	Coating, sprabronze (CAGE 39918)
——	Cobalt Nitrate Hexahydrate (CAGE 64950)
——	Compound and granitic chips roto−finish (CAGE 94942)
EMS 104	Compound, alkaline cleaning
TT−A−580D	Compound, antiseize (NSN 9150−00−300−2869)
MIL−C−25107	Compound, carbon removal
Locquic Primer Loctite N or T)	Compound, cleaning
Turco 4008	Compound, cleaning
Turco 4008−3	Compound, cleaning
Turco 4338	Compound, cleaning
——	Compound, corrosion preventive
AMS 3065	Compound, corrosion preventive, fingerprint, removing.
——	Compound, lapping Crystolon (600 grit) (CAGE 06565)
——	Compound, metrolux anti−rust (CAGE 62755)
——	Compound, No. 116 Roto−Finish (CAGE 94942)
——	Compound, No. 225 Roto−Finish (CAGE 94942)
MIL−S−4383	Compound, sealing
MIL−S−22473, Grade AA	Compound, sealing
MIL−S−8660	Compound, silicone
——	Compound, silicone, Silastic Catalyst, “A” rubber (CAGE 71984)
MIL−A−907	Compound, thread, anti−seize

Materials Required (contd)

Specification No./Part No.	Nomenclature
——	Coolant
——	Cord, nylon
23033674	Cover Plate, first−stage
23033675−1, −2, −3	Cover Plate, first−stage
23033676	Cover Plate, first−stage smash
23032515	Cover Plate, four span
23032516−1, −2, −3	Cover Plate, four span
23032519	Cover Plate, four span
23032501	Cover Plate, notched
2302502−1, −2, −3	Cover Plate, second−stage
23032505	Cover Plate, smash
23032525	Cover Plate, smash
23032520	Cover Plate, three span
23032521−1, −2, −3	Cover Plate, two span
MIL−C−21359	Crayon, marking, hot metal
——	Cyanide, Total
MIL−D−3464, Class I	Desiccant, sixteen unit bag
ZP−4A	Developer, dry
ZP−4	Developer, dry
ZP−3 or ZP−5	Developer, wet
AMS 2475	Dichromate
——	Electro−clean (CAGE 13929)
Type 66−C	Electrofilm (CAGE 85932)
Electrofilm 4396	Electrofilm Coating A
6808303	Element, filter
ER−82 or 2E−48	Emulsifier
——	Etch−Activator No. 2 (CAGE 13929)
EPDM	Ethylene Propylene (CAGE 7V963)
23039657	Facing
23034278	Fixture, inspection
6799520	Fixture, inspection

Materials Required (contd)

Specification No./Part No.	Nomenclature
23034294	Fixture, inspection, turbine Fourth−Stage vane honeycomb
23034292	Fixture, inspection, turbine Second−Stage vane honeycomb
23034293	Fixture, inspection, turbine Third−Stage vane honeycomb
6797754	Fixture, puller mid−bearing torquemeter shaft
6796770	Fixture, test
23032866	Flange, repair
23032896	Flange, repair
——	Flour, abrasive No. 325 grit silica
MIL−F−7024, type II	Fluid, calibrating
No. 121	Flux, liquid (CAGE 70540)
MIL−F−14256	Flux, rosin
AMS 3410	Flux, silver brazing
AMS 3411	Flux, silver brazing, high temperature
——	Gage, feeler, 0.001 in.
6872245	Gage, internal spline
——	Gage, key slot plug
23004328	Gage, plug
02W929−06	Gasket
23008227	Gasket
23039032−1	Gasket
23052087	Gasket
30865	Gasket
6814039	Gasket
6870042	Gasket
AN763−16	Gasket
AN763−24	Gasket
G4MAC58	Gasket
KW11834	Gasket
KW11866	Gasket
KW11867	Gasket
KW12374	Gasket

Materials Required (contd)

Specification No./Part No.	Nomenclature
23039032−3	Gasket, aluminum−parmite, annular
Loctite 568	Gasket, plastic
MS9136−01	Gasket, starter
MS9134−01	Gasket, tachometer generator
MIL−G−9954	Glass beads
——	Gloves, cloth
——	Gloves, insulated
——	Gloves, lint free
——	Gloves, protective rubber
8415−00−266 −8675	Gloves, rubber
——	Glue (Franklin liquid hide)
4240−00−052 −3776	Goggles, protective
MIL−G−5634	Grain, abrasive, soft, for carbon removal
——	Graphite
MIL−PRF−81322	Grease
No. 33, Dow Corning	Grease
MIL−PRF−23827	Grease, lubricating
Metcolite C	Grit (NSN 3431−00−025−8340) (CAGE 39918)
Dynablast No. 16	Grit, aluminum oxide
MIL−A−21380	Grit, aluminum oxide, (120−220 mesh grit)
6797880	Holder, spline
——	Ice, dry
Berol	Ink, black
MS51831A202L	Insert
23007588	Insert, front outer honeycomb seal
MS124695	Insert, helical coil
MS124778	Insert, helical coil
23007589	Insert, honeycomb seal
23031113	Insert, interstage
6858613	Insert, repair, front eyebolt boss (AR)

Materials Required (contd)

Specification No./Part No.	Nomenclature
6858614	Insert, repair, rear eyebolt boss (AR)
——	Isopropanol (anhydrous) (CAGE 0L407)
AMS 3161	Kerosene, deodorized
KW 11897	Kit, potting (CAGE 00250)
KW 11926	Kit, potting (CAGE 00250)
——	Kolene DSC (CAGE 98226)
No. 49−5392−2	Liquid Envelope (CAGE 58361)
MS20995C20	Lockwire
MS20995C32	Lockwire
MIL–L–15719	Lubricant
Molykote 321	Lubricant, dry film (Product of Dow Chemical Corp., Midland, MI 48640)
AMS 3065	Lubricant, protective
——	Magnesium
Metco 405	Material, bonding (CAGE 39918)
——	Material, bonding (Sprabond) (CAGE 39918)
AMS 4434	Material, filler
A50T7B	Material, Filler (GE)
AMS 5504	Material, stainless steel
AMS 4770	Metal, filler, silver brazing
3500AS12	Metallic seal
——	Metex Strip Aid (CAGE 76071)
TT−M−261	Methyl Ethyl Ketone
E−1003	Microsol (CAGE 01058)
MIL−M−7866	Molybdenum Disulfide
MIL−C−19853	Multisol
——	Nickel chloride
——	Nitric Acid
O−N−350	Nitric acid (HNO3)
AN121528	Nut
AN121579	Nut, castle (0.375−24)
——	Nut, self−locking (0.250−28)
6856612	Nut, self−locking (0.375−24)

Materials Required (contd)

Specification No./Part No.	Nomenclature
MS21043−5	Nut, self−locking
MS21043−4	Nut, self−locking (0.250−28)
——	Nut, self−locking (10−32)
——	Oakite, No. 3 (CAGE 44389)
SAE 30	Oil
AMS 3155 (ZL−2 or ZL−3)	Oil, fluorescent penetrant
AMS 3156 (ZL−1B)	Oil, fluorescent penetrant
FP−30A or ZL−30A	Oil, fluorescent penetrant
ZL−2	Oil, fluorescent penetrant
ZL−22	Oil, fluorescent penetrant
MIL−PRF−23699	Oil, lubricating
MIL−PRF−6081, Grade 1005	Oil, lubricating
MIL−PRF−6081, Grade 1010	Oil, lubricating
VV−L−800	Oil, lubricating
——	Oil, Mobil DTE heavy
A−A−50493 superceded by VV−P−216	Oil, penetrating
DC200	Oil, silicone
6877242−001	Packing
AS3209−235	Packing
20305AF	Packing, preformed
20305AF (PPC−115 NINC)	Packing, preformed
20315AF	Packing, preformed
20315AF (PPC−115 NINC)	Packing, preformed
663700−14	Packing, preformed
6825425	Packing, preformed
AS3084−02	Packing, preformed
AS3084−05	Packing, preformed
AS3084−12	Packing, preformed

Materials Required (contd)

Specification No./Part No.	Nomenclature
AS3085−006	Packing, preformed
AS3085−008	Packing, preformed
AS3085−010	Packing, preformed
AS3085−014	Packing, preformed
AS3085−015	Packing, preformed
AS3085−019	Packing, preformed
AS3085−022	Packing, preformed
AS3085−039	Packing, preformed
AS3085−111	Packing, preformed
AS3085−112	Packing, preformed
AS3085−113	Packing, preformed
AS3085−114	Packing, preformed
AS3085−117	Packing, preformed
AS3085−118	Packing, preformed
AS3085−122	Packing, preformed
AS3085−129	Packing, preformed
AS3085−143	Packing, preformed
AS3085−131	Packing, preformed
AS3085−230	Packing, preformed
KW41−001F	Packing, preformed
MS29512−2	Packing, preformed
MS29512−6	Packing, preformed
MS29512−10	Packing, preformed
MS29513−9	Packing, preformed
MS29513−113	Packing, preformed
MS29513−116	Packing, preformed
MS29513−213	Packing, preformed
MS29513−246	Packing, preformed
MS9020−04	Packing, preformed
MS9020−06	Packing, preformed
MS9020−12	Packing, preformed
MS9021−111	Packing, preformed
MS9021−112	Packing, preformed

Materials Required (contd)

Specification No./Part No.	Nomenclature
MS9021−115	Packing, preformed
MS9021−116	Packing, preformed
MS9021−231	Packing, preformed
A−215	Paint Stripper, CEE BEE
Alseal No. 585	Paint, aluminum
——	Paint, aluminum polytherm
S−1193	Paint, Glyptol
——	Paint, green stop−off, heat and corrosion resistant (CAGE 63585)
——	Paint, Nubelon
No. 280	Paper, grit abrasive
——	Paper, No. 320 grit
No. 10	Paste, fluorescent
Berol 753	Pencil
Berol 8800	Pencil
VV−P−236	Petrolatum, technical
AN150306	Pin
AN150334	Pin
MS171502	Pin
MS9105−03	Pin
MS9486−25	Pin
AN122692	Pin
AN150208	Pin
MS171434	Pin (AR)
——	Pin, brass
AN381−3−10	Pin, cotter
MS24665−151	Pin, cotter
MS24665−150	Pin, cotter
6851970	Pin, cover
6847913	Pin, headless shouldered (AR)
6739977	Pin, locking
MS171464 or MS171494	Pin, oversize (AR)
MS171432	Pin, spring

Materials Required (contd)

Specification No./Part No.	Nomenclature
MS171559	Pin, spring
MS171632	Pin, spring
——	Pits, apricot
6797757	Plate, inner ring puller
AMS 2406	Plating, chromium, hard deposit
AN932−M3	Plugs
——	Potassium flouride
——	Potassium hydroxide
——	Potassium manganate
——	Potassium permanganate
No. 14A	Powder, fluorescent magnetic inspection (CAGE 37676)
Al−1013	Powder, molybdenum (CAGE 06677)
AMDRY 313X	Powder, molybdenum (CAGE 9G886)
Thermotec 18951	Powder, molybdenum (CAGE 9G886)
Metco 404	Powder, nickel alumoide (CAGE 39918)
——	Press (4000 lb)
Chemlock No. 205	Primer (CAGE 08CC3)
A4004	Primer (CAGE 71984)
——	Prussian Blue
——	Remover, paint (Turco Transpo No. 608) (CAGE 61102)
Turco 4181	Remover, rust (CAGE 61102)
6858612	Repair parts kit, overhaul, starter shaft seal
AMS 3132	Resin coating
MIL−PRF−3043	Resin coating
Dow Corning 1−2531 or GE SR−6426	Resin, silicone
No. 852−201	Resin, Teflon (clear finish)
No. 851−204	Resin, Teflon (one coat enamel)
23032867	Ring, repair

Materials Required (contd)

Specification No./Part No.	Nomenclature
23032872	Ring, repair
MS20427−3C5	Rivet
AMS 4190	Rod, arc filler
AMS 4395	Rod, arc filler
——	Rod, drift (0.125 in.)
Type 1001	Rod, nylon 1/16 in. (CAGE 83616)
AMS 4434	Rod, welding
AMS 4951	Rod, welding
AMS 4954	Rod, welding
AMS 5680	Rod, welding
AMS 5776	Rod, welding
AMS 5777	Rod, welding
AMS 5782	Rod, welding
AMS 5783	Rod, welding
AMS 5784	Rod, welding
AMS 5785	Rod, welding
AMS 5786	Rod, welding
AMS 5832	Rod, welding
AMS 6464	Rod, welding
AMS 6466	Rod, welding
AWS A5.14−76	Rod, welding
AWS A5.9	Rod, welding
AWS A5.9−77	Rod, welding
AZ 101	Rod, welding
MIL–E–6844, class 6, 9, and 13	Rod, welding
MIL–R–5031, class A	Rod, welding
MIL–R–5031, class 6, 12, and 13	Rod, welding
MIL−R−5306, class 6	Rod, welding
——	Rope, fire resistant (or equivalent)
MIL−R−6855, type 1, class 60	Rubber

Materials Required (contd)

Specification No./Part No.	Nomenclature
RTV 3118	Rubber, silicone
RTV 601	Rubber, silicone
——	Sand paper, 600 grit
——	Sand, Michigan white
12000260	Scotch Brite
——	Screw, (0.250−28) hex head
——	Screw, (10−32) hex head
6820289−06	Screw, headless set
6820289−08	Screw, headless set
6820289−10	Screw, headless set
6820289−12	Screw, headless set
——	Screw, magnesium 8−32
3500AS12	Seal, metallic
6876884	Seal, O−ring
6886130	Seal, prop brake
——	Sealant, Permatex #1372
KW11976	Sealer, loctite “A”
KW15021	Sealer, loctite “C”
AMS 3132	Sealer, resin
AMS 3135	Sealer, resin
Krylon No. 1303	Sealer, spray
PL32M Hylomar	Sealing compound
PL32M Hylomar	Sealing compound
6812647	Seat
AN565FC624H10	Setscrew, headset socket
AN565FC624H12	Setscrew, headset socket
AN565FC624H6	Setscrew, headset socket
AN565FC624H8	Setscrew, headset socket
AMS 5504	Sheet, Strip, and Plate
AMS 5512	Sheet, strip, and plate
MIL−S−6721, type Ti	Sheet, strip, and plate
——	Shells, black walnut
——	Shells, walnut

Materials Required (contd)

Specification No./Part No.	Nomenclature
A−A−1042	Shot, cast steel, SAE 110
SAE J827	Shot, steel (size CS 110)
RTV−501	Silastic
——	Silastic, RTV 732 (NSN 8040−01−010−8758)
6845267 −1,−2,−3 or −4	Sleeve, replacement
6850709–220000	Sleeving, insulation
——	Soap, abrado finish No. 260F (CAGE 19320)
——	Sodium cyanide
O−S−578	Sodium hydroxide
MIL−S−6872	Solder
QQ–S–571, Sn60	Solder
QQ–S–571, Sn50	Solder
QQ−S−571, AG−5.5	Solder, silver
QQ−S−571C	Solder, silver (composition AG 5.5, 2.5 or 1.5, Type AC, form W)
AMS 4750	Solder, tin lead
——	Solution, caustic soda
AMS 2475	Solution, chrome pickle
MIL−C−14460	Solution, cleaning
——	Solution, demythol gloxine
ZE−2 or ZE−3	Solution, emulsifier
——	Solution, etching, chromic acid
MIL−M−3171, type III	Solution, magnesium alloy
——	Solvent, Cities Service No. 26 (CAGE 12518)
ASTM D740	Solvent, cleaning, Methyl Ethyl Ketone
TT−T−291	Solvent, cleaning, mineral spirits
MIL–PRF–680, type II	Solvent, dry cleaning (PD−680)
——	Solvent, Nitromethane (CAGE 2W915)

Materials Required (contd)

Specification No./Part No.	Nomenclature
——	Solvent, petroleum
6738054	Spring
AMS 5560	Steel, stainless
AMS 5570	Steel, stainless
AMS 5571	Steel, stainless
AMS 5639	Steel, stainless
AMS 5640	Steel, stainless
AMS 5646	Steel, stainless
——	Stick, diamond wheel cleaning
AMS 4120	Stock, aluminum
——	Stock, magnesium
0.025 in.	Stock, shim
AMS 4130	Stock, steel
——	Sulphur
6797879	Support, mid−bearing torquemeter shaft
6808566	Support, tube flange
——	Swab, cotton
PPP−T−60	Tape, adhesive, pressure sensitive
——	Tape, fiberglass (CAGE 20999)
6845690−3	Tape, insulating
A−A−883	Tape, masking
——	Tape, plater's
MIL−T−23397	Tape, pressure sensitive masking
H−251	Thinner, Actithane (NSN 8010−00−831−5935)
A−A−857	Thinner, lacquer
S−1195	Thinner, paint (CAGE 08800)
MIL−T−81533	Trichloroethane, 1,1,1
——	Trisodium phosphate
MIL−T−8606	Tubing, steel
——	Virgo 500 (CAGE 91784)
MS9320−10	Washer
MS9320−12	Washer
6829920	Washer, cup

Materials Required (contd)

Specification No./Part No.	Nomenclature
6850984	Washer, cup
6820128	Washer, key
6898211	Washer, seal
6739865	Washer, tablock
——	Water, distilled
——	Wax
——	Wheel, grinding (180 grit or less)
AMS 4770	Wire, braze
AZ−101	Wire, filler
——	Wire, Metcoloy No. 2 (CAGE 39918)
——	Wire, sprabond (CAGE 39918)
——	Wire, stainless (Metco 300) (CAGE 39918)

Materials Required (contd)

Specification No./Part No.	Nomenclature
——	Wire, stainless (Metco No. 5)
AISI 1069	Wire, steel
CW 19−CW28	Wire, steel
AMS 5680	Wire, welding
AMS 5832	Wire, welding
MIL−R−5031, CI 6	Wire, welding
——	Wire, welding alloy
MIL−S−6872	Wrap
6797755	Wrench, inner shaft plug spanner
——	Zein (CAGE 9S696)
——	Zyglo

DEPOT MAINTENANCE

LIST OF SEPARATE MANUALS

ACCESSORIES OVERHAUL

Reference Material

None

Alphabetical Index

Subject **Page No.**

Components Covered in Separate Publications 2

Record of Applicable Technical Directives

None

1. **COMPONENTS COVERED IN SEPARATE PUBLICATIONS.**

2. Separate supporting publications covering components used on the T56–A–427 engine are listed in Table 1.

Table 1. Separate Publications

Nomenclature	Part Number	Covered in
Anti–icing Solenoid Valve Assembly	35–055	NAVAIR 03–110FR–2
Electronic Temperature Control Amplifier Assembly	543700–2	NAVAIR 03–110–20
Electronic Temperature Datum Control Assembly	5505067–3	NAVAIR 03–110KD–19
Fuel Control Cut–off Rotary Actuator Assembly	181635 (1034540)	NAVAIR 03–5CHX–24
Fuel Enrichment Solenoid Valve Assembly	190585–1	NAVAIR 03–110FG–7
Ignition Exciter Assembly	40588	NAVAIR 03–5NB–25
Ignition Unit Assembly	10–111160–6	NAVAIR 03–5NA–32
Motor–Generator	181419	NAVAIR 03–5AA–128
Paralleling Valve Assembly	190772–2	NAVAIR 03–110FT–1
Dual Gear and Booster Type Fuel Pump Assembly	022489–054–03	NAVAIR 03–110DAA–14
Speed Sensitive Control Assembly	6404486, 6871121	NAVAIR 03–110–14
Temperature Datum Valve Assembly	330508–1	NAVAIR 03–110FM–2

DEPOT MAINTENANCE

STANDARD PRACTICES

COMPONENT MARKING AND TIME CODING

Reference Material

None

Alphabetical Index

Subject **Page No.**

Component Marking and Time Coding 2
Introduction 2

Record of Applicable Technical Directives

None

1. **INTRODUCTION.**

2. This work package (WP) provides the instructions for component marking and parts service time coding on specific parts used in the T56−A−427 turboprop engine.

3. **COMPONENT MARKING AND TIME CODING.**

Support Equipment Required

Part No./Type Designation	Nomenclature
Marker	Tool, controllable vibrating etching

a. Mark service time code on specific parts. Refer to tables 1 and 2.

b. Part time coding is used so that accumulated time is readily available in determining part life expectancy.

c. Time code the parts listed in table 2 at each engine overhaul.

d. Mark the parts as soon after disassembly as practicable.

e. If the operation time since last overhaul is unknown, the average time for unit of the same type engines processed through depot maintenance during the past three months will be used.

f. Use the following marking procedure:

CAUTION

When making or identifying any part subjected to high temperatures, do not use any marking material containing heavy metals, graphite, and halogen which cause intergranular corrosion of alloys under certain conditions. Sulphur is also undesirable in markers used on high temperature alloys due to sulfidation occurring in the alloys.

The controlled engraving method is a permanent marking which is cut or pressed into the part with a suitable round−nose tool. A rotating cutter or axial vibrating needle (vibro−etch) may be used. Depth of the impression must not exceed 0.002 in. Do not make the code symbols within 0.20 in. of any radius, blending, or other stress riser area. If space is limited, a character size of 1/8 in. is recommended.

Table 1. Time Coding on Parts

Code	Hours	Code	Hours
X	1−50	11	1051−1150
1	51−150	12	1151−1250
2	151−250	13	1251−1350
3	251−350	14	1351−1450
4	351−450	15	1451−1550
5	451−550	16	1551−1650
6	551−650	17	1651−1750
7	651−750	18	1751−1850
8	751−850	19	1851−1950
9	851−950	20	1951−2050
10	951−1050		

Marking time beyond 2050 hours shall be in increments of 100 hours with each added number.

(1) Use the controlled engrave (vibro−etch) marking method for time coding service parts.

(2) The pencils, fine tip and wide tip markers in table 3 are approved for marking iron, nickel and cobalt base alloys which are exposed to temperatures above 800°F (427°C) either by heat treatment or engine operation. Markings on those alloys do not have to be removed from the parts prior to heating above 800°F (427°C). These pencils and markers are also approved for marking titanium alloys providing the markings are removed prior to exposure of the parts to temperatures above 500°F (260°C) by heat treatment or engine operation.

(3) The ball point metal marker listed in table 3 is approved for marking on iron, nickel and cobalt base alloys and on titanium alloys. Markings on these alloys do not have to be removed prior to exposure to temperatures above 500°F (260°C).

(4) Mark parts so that the accumulated hours can be added to obtain the total hours of service.

(5) Use the codes in table 1 to mark parts as follows:

NOTE

Use code X to denote a new part added at overhaul. Code V indicates a new part added at any other activity other than depot maintenance.

(a) A part that has been through overhaul twice, once at 800 hours and once at 600 hours shall be identified with 8.6. The total accumulated hours is 1400.

(b) At the next overhaul after 800 additional hours of service, the part shall be identified with another 8, and will now appear 8.6.8. The total time is now 2200 hours.

(c) If a part in example (a) was replaced on the first overhaul and was continued in service on the second overhaul, to establish that the time coding of the part was not missed, a code X would be added at the time of part replacement and at the second overhaul a 6 would be added. The code would then be X.6.

(d) In example (c), if the part had been returned for overhaul after replacement with 50 hours or less, no additional coding is required. The part would continue in service with a time code X.

(e) The code of the turbine rotor assembly shall be the total time of the highest time part in the assembly.

Table 2. Parts Requiring Service Time Coding

Assembly Part	Time Code (TC) Location
Compressor Section	
Bearing, front	Serial number side of outer ring
Bearing, rear	Serial number side of outer ring
Diffuser	Top of diffuser on front flange
Reduction Gear	
Bearing, ball, propeller shaft	Serial number side of outer ring
Bearing, main drive gear	Serial number side of outer ring
Bearing, pinion gear front	Serial number side of outer ring
Bearing, pinion gear rear	Serial number side of outer ring
Bearing, roller, planet rear carrier	Serial number side of outer ring
Bearing, roller, propeller shaft	Serial number side of outer ring
Carrier, planet rear	Rear side of flange (6:30 position)
Gear and bearing, planet	Front face of gear on flat
Gear, main drive reduction	On the ID flange face
Shaft, propeller	Front side of flange (6:30 position)
Turbine Unit	
Turbine vane casing	Flat OD surface of vane casing, rearward of front split line
Bearing, front	Serial number side of outer ring
Bearing, rear	Serial number side of outer ring
Casing, inlet	OD of casing in same area of permanent identification
Rotor	Rear face of fourth−stage wheel hub

Table 2. Parts Requiring Service Time Coding (contd)

Assembly Part	Time Code (TC) Location
Support, rear bearing	OD of support at the top
Spacers, rotor	Front face of spacer web on the flared surface
Wheels, first−, second−, and third−stage	Rear side of wheel, between the web and hub
Wheels, fourth−stage	Front side of wheel, between the web and hub
Torquemeter	On safety coupling adjacent to serial number

Table 3. Marking Materials and Manufacturer

Manufacturer	Trade Name	No.	Color	Manufacturer Address
Pencils				
A. W. Faber (1)	The Winner	2383	Dark Green	(1) Faber−Castell Corp.
A. W. Faber (1)	The Winner	2388	White	41 Dickerson St.
A. W. Faber (1)	The Winner	2462	Silver	Newark, NJ 07103−2809
Berol Corp (2)	Eagle Verithin	745	Carmine Red	
Berol Corp (2)	Eagle Verithin	751	True Green	(2) Berol USA
Berol Corp (2)	Eagle Verithin	734	White	Danbury Plant
Berol Corp (2)	Eagle Verithin	758	True Blue	Eagle Road
Berol Corp (2)	Eagle Verithin	737	Orange	Danbury, CT 06810
Berol Corp (2)	Eagle Verithin	753	Silver	
Eberhard Faber (3)	Colorbrite	2101	Silver	(3) Eberhard Faber Inc.
Koh−I−Noor (4)	Flexicolor	1800−25	Blue	Wilkes−Barre, PA 18707
Venus(5)	Unique	1206	Blue	
Venus(5)	Unique	1237	Carmine Red	(4) Koh−I−Noor Radiographic Inc.
Venus(5)	Unique	1215	White	100 North Street
Dixon Ticonderoga Co. (7)	Best Red	349	Red (fluorescent)	Bloomsbury, NJ 08804
				(5) Markal Co.
Fine Tip Markers				250 N. Wasnenaw Ave.
Berol Corp (2)	Flash 30		Red	Chicago, IL 60612
Berol Corp (2)	Flash 30		Blue	
Lindy Pen Co. Inc. (8)	Lindy		Green	(6) Irwin−Hodson Co.
Lindy Pen Co. Inc. (8)	Lindy		Blue	Nineth & S.E. Woodward
				Portland, OR 97202−2509
Wide Tip Markers				
Berol Corp (2)	Eagle Marker	8835	Black	(7) Dixon Ticonderoga Co.
Berol Corp (2)	Eagle Marker	8824	Red	2600 Maitland Center Pkwy
Berol Corp (2)	Eagle Marker	8802	Blue	Suite 200

Table 3. Marking Materials and Manufacturer (contd)

Wide Tip Markers (contd)					
Berol Corp (2)	Eagle Marker	8816	Yellow		Maitland, FL 32751
Blaisdell	Liquid Tip	1100	Black		
Blaisdell	Liquid Tip	1100	Red	(8)	Lindy Pen Co.
					7337 Yonkers Ave
Marking Ink					Yonkers, NY 10704
Irwin−Hodson (6)	Dri−Marquette	Black Ink			
				(9)	Big Three Industries, Inc.
Ball Point Metal Markers					P.O. Box 30470−TR
Big Three Industries (9)	Pyromarker	White			Houston, TX 77253

DEPOT MAINTENANCE

CLEANING PROCEDURES

COMBUSTION LINER, COMPRESSOR, TORQUEMETER, AND TURBINE ASSEMBLIES

Reference Material

Magnetic Particle and Fluorescent Penetrant Inspection − Procedures . . . . . WP 017 00
Plating and Surface Treatment of Parts . . . . . WP 018 00
Turbine First Through Fourth−Stage Vane Segment Assemblies − Inspection and Repair . . . . . WP 098 00
Torquemeter Pickup Assembly − Inspection and Repair . . . . . WP 129 00
Anti−Friction Bearings − Maintenance . . . . . WP 138 00
Materials Used on Naval Aircraft in Stripping, Cleaning, Brightening, and Polishing Operations . . . . . NAVAIR 07−1−504
Turbine Engine Cleaning . . . . . NAVAIR 07−1−503

Alphabetical Index

Subject **Page No.**

Combustion Liner Assembly and Crossover Tube Cleaning 10
Compressor Assembly 3
Case Cleaning (Alternate Method) 4
Case Cleaning 3
Diffuser Cleaning 6
Rotor Assembly Cleaning 5
Rotor Assembly Tie Bolt Cleaning 6
Vane Assembly Cleaning 4
Wheel and Blade Cleaning 5
Wheel Spacer Cleaning 5

Alphabetical Index (contd)

Subject **Page No.**

General 3
Introduction 3
Turbine Assembly 7
Blade and Vane Cleaning 8
Clamp Bolt and Nut Cleaning 10
Cleaning Blades without Alpak Coating 8
Inlet Casing, Rear Bearing Support, and Vane Case Cleaning 10
Wheel and Blade Assembly Cleaning 7
Wheel Cleaning 7
Wheel Spacer Cleaning 7
Torquemeter Assembly 11
Inner and Outer Shaft and Safety Coupling Cleaning 11

Record of Applicable Technical Directives

None

1. **INTRODUCTION.**

2. This work package (WP) provides the instructions for cleaning the combustion liner, compressor, torquemeter, and turbine assemblies used in the T56−A−427 turboprop engine.

3. **GENERAL.**

Materials Required

Specification No./Part No.	Nomenclature
P−C−535	Cleaner, alkaline
——	Virgo 500 (CAGE 91784)
——	Shells, walnut

Compressed Air **57**

CAUTION

When using compressed air blast to dry parts after cleaning, avoid application of excessive air pressure to passages orcavities in sheet metal parts. Such parts may be distorted or ruptured by excessive air pressure.

a. Follow cleaning procedures outlined in NAVAIR 07−1−503 and 07−1−504 unless otherwise specifically stated.

b. Parts having areas plated with tungsten carbide (flame plate) shall not be soaked longer than 15 minutes, if alkaline cleaner is used. Use walnut shell blast to complete cleaning.

c. Inspect metal spray−coated parts for reddish or rust−colored spots on the coated surfaces, if cleaned in Virgo 500 or an equivalent. Spots indicate that the coating is worn or damaged, allowing the cleaning solution to contact the bonding medium. Replace coating as directed in WP 018 00.

4. **COMPRESSOR ASSEMBLY.**

5. COMPRESSOR ASSEMBLY − CASE CLEANING.

Support Equipment Required

Part No./Type Designation	Nomenclature
——	Machine, Roto tumble

Materials Required

Specification No./Part No.	Nomenclature
——	Compound, Metrolux anti−rust (CAGE 62755)
——	Chip, Roto−Finish granite, No. 6 (CAGE 94942)
——	Oakite No. 3 (CAGE 44389)
——	Soap, abrado finish No. 260F (CAGE 19320)
——	Gloves, Insulated

a. Stone the horizontal split lines to remove burrs.

b. Secure the case assembly (with vane assemblies installed), using all split line bolts. Torque to 70−85 lb in. except two rear most locations on each side, which should be torqued to 100−110 lb in. (QA)

WARNING

Heated parts will cause skin damage (burns). Use clean insulated gloves to handle parts.

c. Place in an oven and bake at 590−610°F (310−321°C) for 30 minutes.

d. Remove the case assembly from oven and cool at room temperature.

e. Close the ends of the case assembly and the manifold openings. Roto tumble the assembly for one hour at 20−30 rpm. Roto tumble machine shall have a forward and reverse cycle.

f. Use the following roto−tumble cleaning material for cleaning of one compressor case.

(1) Use 1/5 pint of Metrolux anti−rust compound.

(2) Fill compressor case 1/2−2/3 full with hot water 140°F (60°C).

(3) Use 4/5 pint abrado finish No. 260F soap.

NOTE

Wash each load of granite chips in Oakite No. 3 and water (one pound of Oakite to each gallon of water) after every 20−25 cases cleaned. Add new chips from time to time to keep the mixture in the same proportion. The average cleaning time is one hour.

(4) Use three gallons of No. 6 Roto−Finish granite chips.

g. Reverse the rotation of the roto−tumble machine every 60 seconds. Cleaning time will vary with the degree of contamination.

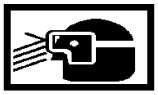

Compressed Air **57**

NOTE

Direct the air blast below the resin seal in the vane assemblies.

h. Remove case assembly from the roto−tumble machine and thoroughly wash. Remove loose deposits with compressed air and finish drying in an oven.

i. Remove the case assembly and place on a bench. Remove any foreign matter which may be on the inside diameters between each of the vane slots.

j. Remove vane assemblies and tumble−polish all vane assembly retention bolts and manifold bolts.

6. COMPRESSOR ASSEMBLY − CASE CLEANING (ALTERNATE METHOD).

Materials Required

Specification No./Part No.	Nomenclature
MIL−PRF−680, type II	Solvent, dry cleaning

a. If the case assembly is not adequately cleaned by the method specified in paragraph 5, remove the stator vane assemblies.

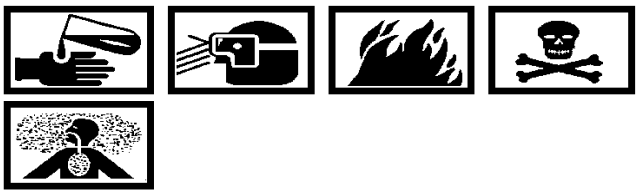

Dry Cleaning Solvent MIL−PRF−680, Type II **3**

CAUTION

Do not use a caustic solution to clean the aluminum−lined casings.

b. Clean the case assembly with MIL−PRF−680, type II dry cleaning solvent and air dry.

7. COMPRESSOR ASSEMBLY − VANE ASSEMBLY CLEANING.

Materials Required

Specification No./Part No.	Nomenclature
——	Solvent, Cities Service No. 26 (CAGE 12518)

a. If the vane assemblies are not adequately cleaned by the method specified in paragraph 5, or if the vane assemblies are to be cleaned separately, use the following method.

WARNING

Cities Service Solvent is flammable and toxic. Do not use near open flame or sparks. Use only in well ventilated areas. Do not allow contact with skin or eyes. Use rubber gloves and goggles or faceshield for protection.

(1) Immerse the vane assembly in Cities Service Solvent No. 26, or equivalent, at room temperature for 12 hours.

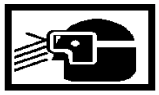

Compressed Air **57**

(2) Rinse in running water. Dry with compressed air.

8. COMPRESSOR ASSEMBLY − ROTOR ASSEMBLY CLEANING.

Materials Required

Specification No./Part No.	Nomenclature
MIL−PRF−680, type II	Solvent, dry cleaning
——	Shells, black walnut
——	Pits, apricot

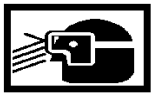

Dry Cleaning Solvent MIL−PRF−680, Type II **3**

CAUTION

Mask holes in first−stage wheel to prevent entrance of grit or solvent. Remove masking after cleaning.

a. Spray the rotor with MIL−PRF−680, type II dry cleaning solvent and air dry. Slowly rotate the rotor and apply the spray at the blade tips in a downward position to prevent entrance of the solvent into the assembly.

b. Soft grit blast the rotor using black walnut shells or apricot pits under 60 psi air pressure until clean. Avoid blade slots while grit blasting.

c. Spray with MIL−PRF−680, type II dry cleaning solvent and air dry. Thoroughly clean blade slots to remove any grit.

9. COMPRESSOR ASSEMBLY − WHEEL SPACER CLEANING.

Materials Required

Specification No./Part No.	Nomenclature
A−A−1206	Cloth, crocus

a. If metal buildup is present on the OD of the wheel spacers, remove with crocus cloth.

10. COMPRESSOR ASSEMBLY − WHEEL AND BLADE CLEANING.

Materials Required

Specification No./Part No.	Nomenclature
——	Agent, wetting
——	Flour, abrasive No. 325 grit silica
——	Turco 4008 (CAGE 61102)

NOTE

Vapor blast is a process of impinging a stream of water and grit under 60−100 psi air pressure against the surface to be cleaned. The mixture is fed to the air nozzle by gravity. Mix the solution in the following ratio:

Water . . . . . 12−15 gallons

Wetting Agent . . . . . 1−2 ounces

Abrasive No. 325
Grit Silica Flour . . . . . 25−35 lbs.

The ratio of components must be maintained, as specified, since time is the controlling factor in obtaining the desired finish. Replace the solution when it shows evidence of becoming dirty or worn out.

a. If the rotor assembly is not adequately cleaned per paragraph 8, this WP disassemble the rotor and clean the individual wheel assemblies using a vapor blast process.

b. The wheels and blades may be cleaned by the following alternate method:

WARNING

Turco 4008 is toxic, use only in well ventilated areas. Do not use on heated surfaces or near open flame. Do not allow contact with skin or eyes. Use rubber gloves and goggles or faceshield for protection.

CAUTION

Do not leave the parts in the special bath for more than ten minutes.

(1) Immerse the wheels or blades in Turco 4008 (includes MIL−D−26549 and auxiliary solution of alkaline permaganate and 26% nitric acid) at 270°F (132°C) for five minutes. Mechanically agitate the solution for five minutes.

(2) Cold water rinse for two minutes. Hot water rinse for two minutes.

11. COMPRESSOR ASSEMBLY − ROTOR ASSEMBLY TIE BOLT CLEANING.

Materials Required

Specification No./Part No.	Nomenclature
MIL−PRF−680, type II	Solvent, dry cleaning
——	Brush, long handled wire

Dry Cleaning Solvent
MIL−PRF−680, Type II **3**

a. Clean the ID of the tie bolt by using a longhandled wire brush with MIL−PRF−680, type II dry cleaning solvent and air dry.

12. COMPRESSOR ASSEMBLY − DIFFUSER CLEANING.

Materials Required

Specification No./Part No.	Nomenclature
MIL−PRF−680, Type II	Solvent, dry cleaning
——	Remover, alkaline rust
——	Sand, Michigan white
——	Brush, soft wire
——	Brush, nylon bristle

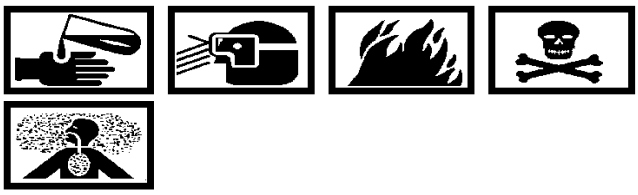

Dry Cleaning Solvent
MIL−PRF−680, Type II **3**

a. Wash in MIL−PRF−680, type II dry cleaning solvent, and air dry. Excessive deposits may be removed by soaking in alkaline rust remover per NAVAIR 07−1−503 followed by wire brushing and final solvent wash.

CAUTION

Prior to sand blasting, wash the ID and thrust faces of the inner sleeve and bearing cage. Plug tube and other openings, where required, to prevent sand from entering cavities other than those being cleaned.

b. As an alternate procedure, remove carbon buildup from the inside rear sump area by sandblasting. Use Michigan white sand under 90−110 psi pressure.

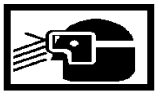

Compressed Air **57**

(1) After sand blasting, parts shall be vibrated and blown out with dry, filtered, compressed air to make sure all sand particles are removed.

NOTE

Mounting surfaces shall be free of scratches after cleaning.

(2) Use soft wire brush at tube ports and a nylon bristle brush on mounting bosses to remove carbon buildup. Use a cleaning solvent or other approved solution to facilitate cleaning.

Dry Cleaning Solvent
MIL−PRF−680, Type II **3**

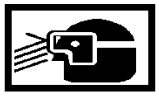

Compressed Air **57**

(3) After cleaning, wash part in MIL−PRF−680, type II dry cleaning solvent. Dry using filtered, compressed air.

13. **TURBINE ASSEMBLY.**

14. TURBINE ASSEMBLY − WHEEL AND BLADE ASSEMBLY CLEANING.

Materials Required

Specification No./Part No.	Nomenclature
——	Acid, muriatic
——	Kolene DSC (CAGE 98226)
——	Virgo 500 (CAGE 91784)

a. The wheel and blade assembly may be cleaned by the following method:

WARNING

Virgo 500 and Kolene DSC are toxic, use only in well ventilated areas. Do not use on heated surfaces or near open flame. Do not allow contact with skin or eyes. Use rubber gloves and goggles or faceshield for protection.

Heated parts will cause skin damage (burns). Use clean insulated gloves to handle parts.

(1) Immerse the assembly in Virgo 500 or Kolene DSC at 925°F (496°C) for five minutes.

(2) Subject the assembly to a water quench.

WARNING

Muriatic acid is toxic, use only in well ventilated areas. Do not use on heated surfaces or near open flame. Do not allow contact with skin or eyes. Use rubber gloves and goggles or faceshield for protection.

(3) Dip in diluted muriatic acid for a maximum of three minutes.

(4) Rinse with hot water.

15. TURBINE ASSEMBLY−WHEEL CLEANING.

Materials Required

Specification No./Part No.	Nomenclature
MIL−PRF−680, type II	Solvent, dry cleaning

Dry Cleaning Solvent
MIL−PRF−680, Type II **3**

a. Clean the serrations and rim face of the turbine wheel for two minutes. Use the vapor blast process described in paragraph 10, this WP. Do not blast the hub spline area.

b. Vapor blast the wheel web for one minute. Use the vapor blast process per paragraph 10, this WP.

c. Clean the wheel with MIL−PRF−680, type II dry cleaning solvent and air dry.

16. TURBINE ASSEMBLY − WHEEL SPACER CLEANING.

Materials Required

Specification No./Part No.	Nomenclature
MIL−PRF−680, type II	Solvent, dry cleaning

CAUTION

Do not vapor blast the pilot face and diameter of the turbine wheel spacers.

a. Clean the entire spacer for one minute. Use the vapor blast process described in paragraph 10, this WP.

Dry Cleaning Solvent
MIL−PRF−680, Type II **3**

b. Clean the spacer with MIL−PRF−680, type II dry cleaning solvent and air dry.

17. TURBINE ASSEMBLY − CLEANING BLADES WITHOUT ALPAK COATING.

Support Equipment Required

Part No./Type Designation	Nomenclature
Model 200S	Honer, Vacu−Blast Super Aero
——	Machine, Roto tumble

Materials Required

Specification No./Part No.	Nomenclature
MIL−G−5634	Grain, abrasive, soft, for carbon removal
MIL−PRF−680, type II	Solvent, dry cleaning
——	Chips, No. 4 granite
——	Chips, No. 5 granite
——	Compound, No. 116 Roto−Finish (CAGE 94942)
——	Compound, No. 225 Roto−Finish (CAGE 94942)
——	Paper, No. 320 grit
	Virgo 500 (CAGE 91784)

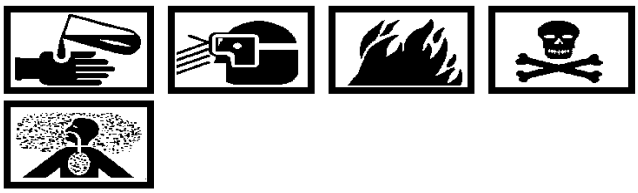

Dry Cleaning Solvent
MIL−PRF−680, Type II **3**

a. Clean the blades with MIL−PRF−680, type II dry cleaning solvent and air dry before and after soft grit blast.

CAUTION

Do not soft grit blast blade serrations. Clean with Virgo 500 or an equivalent.

b. Soft grit blast using MIL−G−5634 grain.

c. If the third− and fourth−stage blades are not adequately cleaned by soft grit blast, the following tumbling process (barrel finish) may be used:

(1) Tumble the blades for five hours at ten rpm, using 500 lbs. of No. 4 granite chips, 300 lbs. of No. 5 granite chips, 9.75 lbs. of No. 116 Roto−Finish compound and five gallons of water. Rinse parts thoroughly with water after tumbling.

(2) Tumble parts again for one hour, using 2.5 lbs. of No. 255 Roto−Finish compound with the water level even with the load. Rinse thoroughly with water after tumbling and air dry.

d. Turbine blades maybe hand−polished, in a longitudinal direction only, using No. 320 grit paper.

18. TURBINE ASSEMBLY − BLADE AND VANE CLEANING.

Materials Required

Specification No./Part No.	Nomenclature
MIL−T−81533	Trichloroethane, 1,1,1
——	Gloves, cloth
——	Abrasive, aluminum oxide 120 mesh (CAGE 10647 and 44197)
——	Gloves, Insulated

Trichloroethane MIL−T−81533 **10**

a. Vapor degrease blades and vanes using MIL−T−81533 1,1,1 Trichloroethane for 5−10 minutes.

CAUTION

Wear clean cloth gloves whenever blades or vanes are handled after cleaning. Blades and vanes must be free of fingerprints, oxides, oil, and other surface contaminants.

NOTE

The dry honing cleaning process consists of impinging a stream of aluminum oxide abrasive against the surface to be cleaned, using air pressure of 20−30 psi.

Use an approved aluminum oxide abrasive in a mesh size of 120 or finer for solid castings and a mesh size of 220−240 for cored castings.

The abrasive breaks down with usage. Replace periodically. Worn abrasive is indicated by its inability to clean parts efficiently.

Use a Vacu−Blast Super Aero Dry Honer, Model 200S.

b. Clean blade and vane exterior surfaces using the dry honing aluminum oxide abrasive method. Mask hollow airfoil parts to prevent entrapment of abrasive material in air cooling passages.

Compressed Air **57**

c. Blow out exterior and interior surfaces with compressed air and inspect air passages to ensure complete removal of residual abrasive material.

NOTE

Time between heat tint and inspection for color shall not exceed four hours after removal from furnace.

d. Heat tint the blades and vanes, as follows, to determine the adequacy of cleaning.

(1) Place blades and vanes in a heat tint basket with proper spacing to assure that all surfaces of the parts come uniformly to temperature.

WARNING

Heated parts will cause skin damage (burns). Use clean insulated gloves to handle parts.

(2) Place basket and parts in an oven at a temperature of 1100−1300°F, depending on the base material, for 15−25 minutes.

(3) Air cool parts.

NOTE

The color tint indicating a satisfactory coat will vary from one facility to another and from one base material to another. It is recommended that each processor establish their own standards to verify the heat tint conditions.

Be aware that engine run CoCrAlY does not always turn a uniform color. During engine operation the aluminum depletes approximately 0.0002 in. Depth from the surface.

(4) Inspect parts for the following coloring.

(a) Matte blue and/or brown tint indicates areas of contamination. Reprocess per steps a. through c.

(b) Light brown or bronze color generally indicates satisfactory coverage and must be complete on the following area:

1. Over every detail vane airfoil, the inside of the outer and inner bands on vanes, and the entire area of the vane which contacts the gas path on first−, second−, and third−stages.

2. Over the entire area of the blade which contacts the gas path on first−, second−, and third stages.

(c) Blue−brown, blue−green, or metallic blue tint generally indicates uncoated areas. Parts with this condition may be stripped and recoated.

(d) Dark blue tint areas indicate oxidationsulfidation. Parts with this indication shall be evaluated further to determine serviceability.

19. TURBINE ASSEMBLY − INLET CASING, REAR BEARING SUPPORT, AND VANE CASE CLEANING.

Materials Required

Specification No./Part No.	Nomenclature
MIL−PRF−680, type II	Solvent, dry cleaning
——	Nitric Acid
——	Turco 4008 (CAGE 61102)
——	Turco 4008−3 (CAGE 61102)
——	Turco 4338 (CAGE 61102)

a. Soak for 30−60 minutes in a 265−275°F (130−135°C), 100 percent solution of Turco 4008−3, 4008, or an equivalent.

b. Rinse in a high pressure water spray or overflowing agitated dip rinse. Dip rinse followed by hand spray with air and water rinses is satisfactory.

c. Soak for 30−60 minutes in a 190−200°F (88−93°C) solution of 2−2.5 pounds of Turco 4338 per gallon of water.

d. Repeat step b.

WARNING

Nitric acid is toxic, use only in well ventilated areas. Do not use on heated surfaces or near open flame. Do not allow contact with skin or eyes. Use rubber gloves and goggles or faces held for protection.

e. Soak for 15−30 minutes in a 65−90°F (18−32°C), 20−30 percent volumetric solution of commercial nitric acid and water.

f. Repeat step b.

g. The rear support may also be cleaned as follows:

(1) Cover or plug the holes in the struts with tape or small rubber or cork plugs.

(2) Seed blast the bearing cage mounting flange and O−ring mating surfaces.

Dry Cleaning Solvent
MIL−PRF−680, Type II **3**

(3) Use MIL−PRF−680, type II dry cleaning solvent or seed blast to clean the remaining areas.

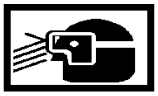

Compressed Air **57**

(4) Blow out all oil passages using compressed air.

20. TURBINE ASSEMBLY − CLAMP BOLT AND NUT CLEANING.

CAUTION

Do not use Turco 4008 to clean the nuts.

a. Clean these parts as specified in paragraph 10, step b, except the parts may be kept in the bath for 15 minutes.

21. **COMBUSTION LINER ASSEMBLY AND CROSSOVER TUBE CLEANING.**

Materials Required

Specification No./Part No.	Nomenclature
MIL−C−14460	Solution, cleaning
——	Abrasive, aluminum oxide (100 grit)
——	Virgo 500 (CAGE 91784)

a. Clean these parts by the following method:

(1) Immerse the assembly in Virgo 500 or equivalent, at 925°F (496°C) for five minutes.

(2) Subject the assembly to a water quench.

(3) Rinse with hot water.

b. The following alternate cleaning method may be used.

(1) Soak parts in MIL−C−14460 cleaning solution for 30−40 minutes at 210−220°F (99−104°C).

Compressed Air **57**

(2) Rinse with hot water and dry with compressed air.

(3) Blast at 6D−90 psi using 100 grit aluminum oxide.

22. **TORQUEMETER ASSEMBLY.**

23. TORQUEMETER ASSEMBLY−INNER AND OUTER SHAFT AND SAFETY COUPLING CLEANING.

Materials Required

Specification No./Part No.	Nomenclature
MIL−PRF−680, type II	Solvent, dry cleaning

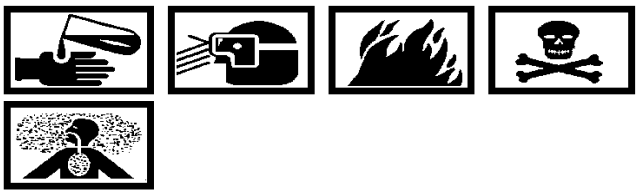

Dry Cleaning Solvent MIL−PRF−680, Type II **3**

a. Clean all parts except roller bearing components with MIL−PRF−680, type II dry cleaning solvent.

CAUTION

Do not process the pickup assembly with the other parts. Refer to WP 129 00 for pickup instructions.

b. Process mid−bearing per bearing inspection instructions in WP 138 00.

DEPOT MAINTENANCE

STANDARD PRACTICES

INSPECTION, REPAIR, AND REPLACEMENT

Reference Material

Component Marking and Time Coding . . . . . WP 007 00
Magnetic Particle and Fluorescent Penetrant Inspection − Procedures . . . . . WP 017 00

Alphabetical Index

Subject **Page No.**

General 2
General Repair and Replacement Procedures 2
AN and MS Standard Parts Repair and Replacement 3
Definitions 2
Weld Repair 3
Introduction 2
Special Inspection Requirements 4

Record of Applicable Technical Directives

None

1. **INTRODUCTION.**

2. This work package (WP) provides the instructions for general inspection, repair, and replacement procedures used in the T56−A−427 turboprop engine.

3. **GENERAL.**

Materials Required

Specification No./Part No.	Nomenclature
——	Gloves, lint free

a. Work areas shall be well lighted and protected from air currents that stir and carry dust and foreign particles. Work area, tools, equipment, work benches and personnel clothing shall be free from dirt and foreign particles that would contaminate the part or end article being repaired or assembled. Adequate procedures and controls shall be established and enforced to ensure that parts, components and end articles being disassembled, repaired, assembled and tested are free from dirt or foreign particles that may adversely affect their proper operation. Lint free gloves must be used at all times when handling bearings.

b. Keep inspection tables and benches clean. Keep special gages and indicators in cabinet lockers when not in use.

CAUTION

To prevent cracking of parts during service, do not use graphite or hydrocarbon pencils for inspection marking on stainless parts in the hot section of the engine. (Refer to WP 007 00 for component marking details).

c. After inspection, identity each part as Serviceable, Repairable, or Condemned, and send it to its proper area.

d. The limits specified in the applicable WP, together with visual inspection, are the indispensable guides in determining the further use, repair, or rejection of a particular part. The applicable WP shall be followed throughout the inspection and repair operations.

e. The applicable WP contains the minimum and maximum clearances for assembled parts. Parts shall be replaced, or repaired, when visual inspection and conditions indicate that measurement is required and wear is found to exceed the limits.

f. Minor imperfections on parts, incurred in process of disassembly or handling at overhaul or at previous servicing, are of a nature too varied to be entirely covered by specific instructions within this technical manual. Acceptance or rejection of these parts shall be left to the combined judgment of technical and quality control personnel of the local facilities. This judgment may be based on the following principles:

(1) Is the damaged part a highly stressed part of the engine?

(2) Could the nature of the imperfection on the part create a possible condition of over−stress which might result in failure?

g. Service−approved, corrosion−preventive compounds are required on all steel parts after inspection unless the part is to be reworked immediately.

h. Close, with suitable covers, plugs, or caps, all openings that have been uncovered during repair.

4. **GENERAL REPAIR AND REPLACEMENT PROCEDURES.**

5. DEFINITIONS.

a. The following terms and definitions apply when inspecting parts for surface damage:

(1) Abrasion — An area of roughened scratches or marks, usually caused by foreign matter between moving parts or surfaces.

(2) Brinelling — One or more indentations on bearing ring races, usually caused by high static loads or application of force during installation and/or removal. Indentations are rounded/spherical due to the impression left by the contacting balls and/or rollers of the bearing.

(3) Burning — Surface damage due to excessive heat, usually caused by improper fit, defective lubrication, or overtemperature operation.

(4) Burr — A sharp or roughened projection of metal usually a result of machine processing.

(5) Chafing — Should be used to describe the cause for other defined surface conditions rather than

a description of the actual condition. (Same as Fretting).

(6) Chipping — The breaking away of pieces of material, usually caused by excessive stress concentration or careless handling.

(7) Corrosion — Surface damage caused by chemical action. (This is called rust on ferrous parts.)

(8) Crack — A partial separation of material, usually by vibration, overloading, faulty internal stresses, defective assembly, or fatigue.

(9) Crazing — A condition sometimes exhibited by a coated part. A surface coating condition which may appear in combination with grain boundary oxidation or other base metal attack conditions. In appearance, it will often be evident in patches and craze−lines will not follow (necessarily) grain boundaries but will often tend toward symmetry.

(10) Grain boundary oxidation — A pattern following boundaries of metal grains resulting from removed surface oxides. The more prominent area is usually in the form of stringers.

(11) Dent — A small, shallow depression in a surface, having rounded bottom and edges; usually caused by the part being struck with a rounded object.

(12) Erosion — The removal of metal by high velocity gases, usually in the combustion liners and turbine unit components.

(13) Flaking — The breaking loose of small pieces of metal or coated surfaces, usually caused by defective plating or excessive loading.

(14) Fretting — See definition of Chafing.

(15) Galling — A severe condition of Chafing or Fretting in which a transfer of metal from one part to another occurs, usually caused by a slight movement of mated parts having limited relative motion and under high loads.

(16) Gouging — A furrowing condition in which a displacement of metal has occurred (a torn effect), usually caused by a relatively large piece of metal or foreign material between close moving parts.

(17) Grooving — A recess or channel with rounded and smoothed edges. Usually caused by continued, abnormal wear or faulty alignment of parts.

(18) Inclusion — A particle of foreign matter in the metal, usually associated with magnetic particle inspection.

(19) Nick — A sharp sided gouge or depression with a V−shaped bottom (exceeding 0.010 in. in depth, caused by a sharp edge), usually a result of careless handling of tools and parts.

(20) Peening — A series of blunt depressions in a surface, such as from a hammer.

(21) Pick−up — A build−up or rolling metal from one area to another, usually caused by insufficient lubrication, clearances, or foreign matter.

(22) Pitting — Small hollows of irregular shape in the surface, usually caused by corrosion.

(23) Scoring — A series of deep scratches, usually caused by foreign particles between moving parts, or careless assembly or disassembly techniques.

(24) Scratches — Shallow, thin lines or marks, varying in degree, caused by presence of fine foreign particles during operation or contact with other parts during handling.

(25) Scuffing — A surface condition evidenced by pick up, usually caused by insufficient clearance or lubrication.

(26) Spalling — A roughened area indicated by a chipping or peeling of the surface metal, usually caused by any surface damage under load. (Do not misinterpret as Flaking.)

6. WELD REPAIR.

a. Use care to avoid distortion of parts when rewelding or patching. Be sure to use the welding electrode (filler material) of the correct size.

b. Refer to the applicable paragraph for the particular part or assembly to be welded.

c. It is important that a dimensional check be made on a part after it has been repaired by welding.

d. Weld bead need not be ground flush unless interference with mating parts is encountered or if air flow disturbance would result.

7. AN AND MS STANDARD PARTS REPAIR AND REPLACEMENT.

a. Repair or replace parts according to existing directives.

8. **SPECIAL INSPECTION REQUIREMENTS.**

a. Specific engine components and detail parts require definite types of inspection. Refer to WP 017 00, which lists the detail parts and the conditions for which they must be checked magnetically.

b. In addition to the requirements of WP 017 00, a complete visual inspection of all parts must be made.

c. As a result of the visual inspection, any clearance that appears excessively tight or loose must be checked per the applicable WP. All parts of the assembly must be together so that quick reference between the OD of one piece and the ID of the mating piece can be made. The actual clearance is determined by measuring the mating parts.

d. All threaded surfaces must be carefully inspected for wear, burring, and general condition.

e. Check oil and air passages and holes for burring, openings blocked by dirt or other foreign material, or general damage.

f. Inspect all studs, screw bushings, bearing cages, and plugs for looseness and damage.

g. Thoroughly check any part which may receive excessive wear, burns, distortions, or cracks. Any such part, which is damaged beyond acceptable limits, shall be repaired or replaced as specified.

DEPOT MAINTENANCE

GENERAL REPAIR

SHEET METAL PARTS

Reference Material

None

Alphabetical Index

Subject **Page No.**

General Repair of Sheet Metal Parts 2
Introduction 2

Record of Applicable Technical Directives

None

1. **INTRODUCTION.**

2. This work package (WP) provides the instructions for general repair and rework procedures for sheet metal parts used in the T56−A−427 turboprop engine.

3. **GENERAL REPAIR OF SHEET METAL PARTS.**

a. The following minor rework and repair may be accomplished on sheet metal parts which are not of a structural nature.

(1) Dents or deformities, whose bend radius is not sharp enough to cause stretching or cracking of the material, may be straightened.

(2) Secondary damage, such as scratches, small tears, or kinks of a minor nature, may be smooth−blended or stop−drilled per standard shop practices and coated with a suitable corrosion preventive.

(3) Localized worn areas on parts, such as firewall baffles which operate under a spring-loaded friction, may be built up and polished smooth to the original stock thickness, using silver braze or other approved methods.

(4) Welding of cracks, small holes, or other slight damage is acceptable provided the following conditions are observed:

(a) An approved filler rod shall be used for the type material to be welded.

(b) All welding shall be accomplished by a certified welder.

(c) All weld material shall be thoroughly removed from a previously − welded joint before re−welding.

(d) Welding scale shall be removed by wire brushing after weld repair.

(e) Stress relieve part as required.

DEPOT MAINTENANCE

INSPECTION, REPAIR, AND REPLACEMENT

BEARING CAGE

Reference Material

Plating and Surface Treatment of Parts . . . . . WP 018 00
Compressor Air Inlet Housing Assembly − Inspection and Repair . . . . . WP 068 00

Alphabetical Index

Subject **Page No.**

Bearing Cage 2
Housing Bore Metal Spray Repair 3
Inspection 2
Repair 2
Replacement 2
Introduction 2

Record of Applicable Technical Directives

None

1. **INTRODUCTION.**

2. This work package (WP) provides the instructions for general inspection, repair, and replacement of bearing cages used in the T56−A−427 turboprop engine.

3. **BEARING CAGE.**

4. BEARING CAGE − INSPECTION.

a. Inspect installed bearing cages as follows:

(1) Bolted−in cage: Do not remove cage unless obviously worn or damaged. Replace cage if worn or damaged beyond limits in applicable WP.

(2) Pinned−in cage: Replace cage and pin (pins) if any of the following conditions are found:

(a) Cage damage or wear beyond the limits in applicable WP.

(b) Retaining pin is missing, loose, or damaged. Loose pins can be detected by the use of an air jet.

(c) Cage with one or two pins: End of pin exceeds 0.051 in. below cage ID surface.

(d) Cage with three pins: End of two or three pins exceed 0.051 in. below cage ID surface.

(3) Irregular surface discoloration or minute spalling on ID of bearing cages is acceptable if rough areas can be removed by hand polishing.

5. BEARING CAGE − REPLACEMENT.

Support Equipment Required

Part No./Type Designation	Nomenclature
6798844	Puller, compressor front bearing cage
6872235	Puller, side gear bearing cage

a. Replace bearing cages as follows:

NOTE

All cages shall be selected to obtain the bearing cage−to−housing fit as well as the specified bearing−to−cage fit in applicable WP.

(1) Usually the cage may be pressed or driven out of its housing using an arbor press or a hammer and suitable drift. Blind cages may be removed with a standard tap. Use 6798844 compressor front bearing cage puller to remove cage from air inlet housing. Also use 6872235 side gear bearing cage puller to remove side gear cage from air inlet housing. Refer to WP 068 00 for inspection.

(2) Before installing the new cage, be sure that the bole of the housing is clean.

Dry Ice, BB−C−104 **56**

WARNING

Super−chilled (frozen parts) will cause freezer burn. Use clean insulated gloves to handle dry ice and frozen parts.

Heated parts will cause skin damage (burns). Use clean insulated gloves to handle parts.

CAUTION

To ensure seating and to avoid galling and wear on the cage and its mating bore, chill the cage and/or heat the area around the cage bore before installing the cage. Do not exceed 300°F (149°C).

(3) Press the new cage into place, making sure that the new lockpin(s) will be at least 3/16 in. from the old position and not close to an oil passage. A gap of 0.002 in. max is permissible between a bearing cage flange and its mated seating surface.

6. BEARING CAGE − REPAIR.

a. When a serviceable bearing cage will not meet the fit limits in applicable WP, rework as follows:

(1) Chrome plate the cage OD or ID as directed in WP 018 00.

(a) Plating thickness shall be between 0.005 − 0.010 in. after finish grind.

(2) Oversize cages (OD) may be used where applicable and when available. However, oversize cages shall be used only as required, and the smallest possible oversize cage shall be used. When an oversize cage is necessary, machine the bore for the cage as required to maintain assembly fit specified in applicable WP.

(3) Drill the new pin holes in the housing by using the holes in the cage as drill guides. The new holes shall be only deep enough to permit the pins to be installed flush to 0.030 in. below the ID of the cage.

(4) Install the new pins, selected to obtain a drive fit.

7. BEARING CAGE − HOUSING BORE METAL SPRAY REPAIR.

Materials Required

Specification No./Part No.	Nomenclature
——	Sprabond
——	Sprabronze

NOTE

When a serviceable bearing cage, standard or oversize, does not meet the fit limit in applicable WP, metallize the housing bore per WP 018 00.

a. Machine the repaired bore to original dimensions.

b. The following bonding medium and coating alloy shall be used for metallizing repair.

(1) Bonding medium, Sprabond, 0.001 − 0.003 in. thick.

(2) Coating alloy, Sprabronze, 0.006 − 0.015 in. thick after finish machining.

DEPOT MAINTENANCE

STANDARD PRACTICES

BEARING JOURNAL REPAIR

Reference Material

Gear Inspection . . . . . WP 016 00
Plating and Surface Treatment of Parts . . . . . WP 018 00

Alphabetical Index

Subject **Page No.**

Bearing Journal 2
Repair 2
Introduction 2

Record of Applicable Technical Directives

None

1. **INTRODUCTION.**

2. This work package (WP) provides the instructions for the repair of bearing journals used in the T56−A−427 turboprop engine.

3. **BEARING JOURNAL.**

4. BEARING JOURNAL − REPAIR.

NOTE

When a grinding operation causes removal of base metal, inspect for grinding burns per WP 016 00.

a. Damaged or undersize bearing journals (except propeller shaft bearing journal and cone seat area) may be repaired by double shot peen chrome plating per WP 018 00 after removing all scoring by standard shop procedures.

DEPOT MAINTENANCE

REPAIR

THREADED PARTS

Reference Material

Bushing Replacement . . . . . WP 014 00

Alphabetical Index

Subject **Page No.**

Introduction 2
Threaded Parts 2
Repair 2

Record of Applicable Technical Directives

None

1. **INTRODUCTION.**

2. This work package (WP) provides the instructions for the repair of threaded parts used in the T56−A−427 turboprop engine.

3. **THREADED PARTS.**

4. THREADED PARTS − REPAIR.

CAUTION

If a Heli−Coil thread insert is improperly installed, it may jam the tapped hole so that the screw cannot be installed; it may bind the threads of the screw and prevent proper tightening; or it may tend to back out of the hole when the screw is removed. Observe all the precautions at the time the thread insert is being installed to avoid these troubles.

NOTE

In tapping magnesium alloy, the resulting tapped hole will be approximately 0.002 in. oversize.

a. Repair parts having stripped or damaged threaded holes by use of Heli−Coil inserts or by installing a suitable bushing, provided there is sufficient stock to maintain the required wall strength after drilling, tapping, and installing the bushing. Replace bushings per WP 014 00.

DEPOT MAINTENANCE

REPLACEMENT

BUSHING

Reference Material

None

Alphabetical Index

Subject **Page No.**

Bushing − Replacement 2
Introduction 2

Record of Applicable Technical Directives

None

1. **INTRODUCTION.**

2. This work package (WP) provides the instructions for the repair of bushings used in the T56−A−427 turboprop engine.

3. **BUSHING − REPLACEMENT.**

Support Equipment Required

Part No./Type Designation	Nomenclature
6798251−1	Tap—Oversize, 1/4−20NC for 0.003 oversize stud in magnesium and 0.004 oversize stud in stainless steel
6798251−2	Tap—Oversize, 1/4−20NC for 0.006 oversize stud in magnesium
6798251−3	Tap—Oversize, 1/4−20NC for 0.009 oversize stud in magnesium
6798251−4	Tap—Oversize, 5/16−18NC for 0.003 oversize stud in magnesium
6798251−5	Tap—Oversize, 5/16−18NC for 0.006 oversize stud in magnesium
6798251−6	Tap—Oversize, 5/16−18NC for 0.009 oversize stud in magnesium
6798251−7	Tap—Oversize, 5/16−18NC for 0.003 oversize insert in magnesium
6798251−8	Tap—Oversize, 5/16−18NC for 0.006 oversize insert in magnesium
6798251−9	Tap—Oversize, 3/8−16NC for 0.003 oversize stud in magnesium
6798251−10	Tap—Oversize, 3/8−16NC for 0.006 oversize stud in magnesium
6798251−11	Tap—Oversize, 3/8−16NC for 0.009 oversize stud in magnesium
6798251−12	Tap—Oversize, 3/8−16NC for 0.003 oversize insert in magnesium
6798251−13	Tap—Oversize, 3/8−16NC for 0.006 oversize insert in magnesium
6798251−14	Tap—Oversize, 7/16−14NC for 0.003 oversize stud in magnesium

Support Equipment Required (contd)

Part No./Type Designation	Nomenclature
6798251−15	Tap—Oversize, 7/16−14NC for 0.006 oversize stud in magnesium
6798251−16	Tap—Oversize, 7/16−14NC for 0.009 oversize stud in magnesium
6798251−17	Tap—Oversize, 7/16−14NC for 0.003 oversize insert in magnesium
6798251−18	Tap—Oversize, 7/16−14NC for 0.006 oversize insert in magnesium
6798251−19	Tap—Oversize, 1/2−13NC for 0.003 oversize insert in magnesium
6798251−20	Tap—Oversize, 1/2−13NC for 0.006 oversize insert in magnesium
6798251−21	Tap—Oversize, 1/2−20NF for 0.003 oversize insert in magnesium
6798251−22	Tap—Oversize, 1/2−20NF for 0.006 oversize insert in magnesium
6798251−23	Tap—Oversize, 5/8−18NF for 0.003 oversize insert in magnesium
6798251−24	Tap—Oversize, 3/4−10NC for 0.003 oversize insert in magnesium
6798251−25	Tap—Oversize, 3/4−10NC for 0.006 oversize insert in magnesium
6798251−26	Tap—Oversize, 1 1/4−18NEF for 0.003 oversize insert in magnesium
6798251−27	Tap—Oversize, 1 1/4−18NEF for 0.006 oversize insert in magnesium
6798251−28	Tap—Oversize, 1/4−20NC for 0.001 oversize stud in stainless steel
6798251−29	Tap—Oversize, 1/4−20NC for 0.0025 oversize stud in stainless steel

Support Equipment Required (contd)

Part No./Type Designation	Nomenclature
6798251−30	Tap—Oversize, 1/4−20NC for 0.0033 oversize stud in stainless steel
6798251−31	Tap—Oversize, 1/4−20NC for 0.0055 oversize stud in stainless steel
6798251−32	Tap—Oversize, 5/16−24NF for 0.0015 oversize stud in stainless steel
6798251−33	Tap—Oversize, 5/16−24NF for 0.003 oversize stud in stainless steel
6798251−34	Tap—Oversize, 5/16−24NF for 0.0045 oversize stud in stainless steel
6798251−35	Tap—Oversize, 5/16−24NF for 0.006 oversize stud in stainless steel
6798251−36	Tap—Oversize, 5/16−24NF for 0.009 oversize stud in stainless steel
6798251−37	Tap—Oversize, 1/4−20NC for 0.0015 oversize stud in steel
6798251−38	Tap—Oversize, 1/4−20NC for 0.003 oversize stud in steel
6798251−39	Tap—Oversize, 1/4−20NC for 0.006 oversize stud in steel
6798251−40	Tap—Oversize, 1/4−20NC for 0.009 oversize stud in steel
6798251−41	Tap—Oversize, 1/4−20NC for 0.012 oversize stud in steel
6798251−42	Tap—Oversize, 1/4−28NF for 0.0011 oversize stud in steel
6798251−43	Tap—Oversize, 1/4−28NF for 0.0022 oversize stud in steel
6798251−44	Tap—Oversize, 1/4−28NF for 0.0033 oversize stud in steel
6798251−45	Tap—Oversize, 1/4−28NF for 0.0044 oversize stud in steel
6798251−46	Tap—Oversize, 1/4−28NF for 0.003 oversize bushing in magnesium

Support Equipment Required (contd)

Part No./Type Designation	Nomenclature
6798251−47	Tap—Oversize, 1/4−28NF for 0.006 oversize bushing in magnesium
6798251−48	Tap—Oversize, 5/16−18NC for 0.0015 oversize stud in magnesium
6798251−49	Tap—Oversize, 5/16−18NC for 0.012 oversize stud in magnesium
6798251−50	Tap—Oversize, 5/16−24NF for 0.0015 oversize stud in magnesium
6798251−51	Tap—Oversize, 5/16−24NF for 0.003 oversize stud in magnesium
6798251−52	Tap—Oversize, 5/16−24NF for 0.006 oversize stud in magnesium
6798251−53	Tap—Oversize, 5/16−24NF for 0.009 oversize stud in magnesium
6798251−54	Tap—Oversize, 5/16−24NF for 0.012 oversize stud in magnesium
6798251−55	Tap—Oversize, 5/16−24NF for 0.001 oversize stud in steel
6798251−56	Tap—Oversize, 5/16−24NF for 0.001 oversize stud in steel
6798251−57	Tap—Oversize, 5/16−24NF for 0.002 oversize stud in steel
6798251−58	Tap—Oversize, 5/16−24NF for 0.003 oversize stud in steel
6798251−59	Tap—Oversize, 5/16−24NF for 0.004 oversize stud in steel
6798251−60	Tap—Oversize, 3/8−16NC for 0.0015 oversize stud in magnesium
6798251−61	Tap—Oversize, 3/8−16NC for 0.012 oversize stud in magnesium
6798251−62	Tap—Oversize, 7/16−14NC for 0.0015 oversize stud in magnesium
6798251−63	Tap—Oversize, 7/16−14NC for 0.012 oversize stud in magnesium

Support Equipment Required (contd)

Part No./Type Designation	Nomenclature
6798251−64	Tap—Oversize, 7/16−20NF for 0.003 oversize bushing in magnesium
6798251−65	Tap—Oversize, 7/16−20NF for 0.006 oversize bushing in magnesium
6798251−66	Tap—Oversize, 9/16−18NF for 0.003 oversize bushing in magnesium
6798251−67	Tap—Oversize, 9/16−18NF for 0.006 oversize bushing in magnesium

Materials Required

Specification No./Part No.	Nomenclature
——	Sealant, Permatex #1372

CAUTION

Bushings which are subject to oil pressure or which communicate with oil chambers at the inner end are to be assembled using permatex sealant unless otherwise specified in manual. Upon completion of installation, all excess compound must be removed.

The amount of compound used in a blind hole shall be kept to a minimum to eliminate the possibility of cracking the casting.

NOTE

If an oversize bushing is required, use the appropriate oversize thread tap.

a. Replace damaged or loose threaded bushing inserts.

b. Drill out the lockpin.

c. Remove the damaged bushing.

NOTE

Ensure drill tip included angle is greater than 122 degrees. This causes the drill outside edge to contact the surface of the bushing external thread before the drill tip. This is necessary to minimize drill drift away from the harder bushing threads and into the softer internal threads.

d. Install new bushing.

e. Drill hole 0.030 inch +/− 0.010 inch deeper than pin length and secure bushing with a new lockpin. Stake as follows:

(1) Place punch adjacent to pin hole such that shank outside diameter is approximately flush with pin hole outside diameter. (See figure 1).

(2) Hold punch top away from pin hole at approximately five degrees.

(3) Strike punch with hammer to deform metal slightly over top of pin.

(4) Additional stakes (restakes) are permitted if deformed metal is broken off.

(5) Total stake attempt locations permitted is three.

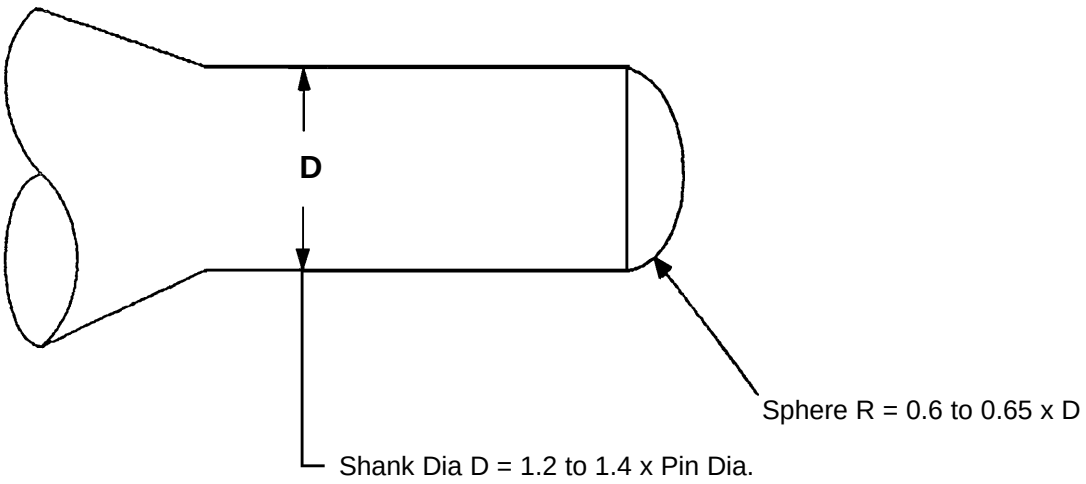

Figure 1. Staking Punch Configuration

DEPOT MAINTENANCE

STANDARD PRACTICES

STUD REPLACEMENT

Reference Material

None

Alphabetical Index

Subject **Page No.**

General 2
Introduction 2
Stud Replacement 2
Lubrication 4
Oversizes 2
Retapping 4
Selection 5

Record of Applicable Technical Directives

None

1. **INTRODUCTION.**

2. This work package (WP) provides the instructions for replacement of studs used in the T56−A−427 turboprop engine.

3. **GENERAL.**

a. Figure 1 provides stud driving torque limits for setting all fine and coarse thread studs of aircraft quality steel. Torque limits for other thread sizes and special applications are on drawings.

b. Minimum diameter of a stud is the smallest diameter (nut−end or stud end thread root of plain studs or shank of necked−down studs). This is the probable place of fracture and determines the torque.

c. When replacing a stud, carefully control the setting height to ensure proper assembly of parts. Measure adjacent studs in the same location to determine setting height or refer to the appropriate print.

4. **STUD REPLACEMENT.**

5. STUD REPLACEMENT − OVERSIZES.

Support Equipment Required

Part No./Type Designation	Nomenclature
6798251−1	Tap—Oversize, 1/4−20NC for 0.003 oversize stud in magnesium and 0.004 oversize stud in stainless steel
6798251−2	Tap—Oversize, 1/4−20NC for 0.006 oversize stud in magnesium
6798251−3	Tap—Oversize, 1/4−20NC for 0.009 oversize stud in magnesium
6798251−4	Tap—Oversize, 5/16−16NC for 0.003 oversize stud in magnesium
6798251−5	Tap—Oversize, 5/16−18NC for 0.006 oversize stud in magnesium
6798251−6	Tap—Oversize, 5/16−18NC for 0.009 oversize stud in magnesium
6798251−7	Tap—Oversize, 5/16−18NC for 0.003 oversize insert in magnesium
6798251−8	Tap—Oversize, 5/16−18NC for 0.006 oversize insert in magnesium
6798251−9	Tap—Oversize, 3/8−16NC for 0.003 oversize stud in magnesium
6798251−10	Tap—Oversize, 3/8−16NC for 0.006 oversize stud in magnesium
6798251−11	Tap—Oversize, 3/8−16NC for 0.009 oversize stud in magnesium
6798251−12	Tap—Oversize, 3/8−16NC for 0.003 oversize insert in magnesium
6798251−13	Tap—Oversize, 3/8−16NC for 0.006 oversize insert in magnesium
6798251−14	Tap—Oversize, 7/16−14NC for 0.003 oversize stud in magnesium
6798251−15	Tap—Oversize, 7/16−14NC for 0.006 oversize stud in magnesium
6798251−16	Tap—Oversize, 7/16−14NC for 0.009 oversize stud in magnesium
6798251−17	Tap—Oversize, 7/16−14NC for 0.003 oversize insert in magnesium
6798251−18	Tap—Oversize, 7/16−14NC for 0.006 oversize insert in magnesium
6798251−19	Tap—Oversize, 7/16−14NC for 0.003 oversize insert in magnesium
6798251−20	Tap—Oversize, 1/2−13NC for 0.006 oversize insert in magnesium
6798251−21	Tap—Oversize, 1/2−20NF for 0.003 oversize insert in magnesium

Support Equipment Required (contd)

Part No./Type Designation	Nomenclature
6798251−22	Tap—Oversize, 1/2−20NF for 0.006 oversize insert in magnesium
6798251−23	Tap—Oversize, 5/8−18NF for 0.003 oversize insert in magnesium
6798251−24	Tap—Oversize, 3/4−10NC for 0.003 oversize insert in magnesium
6798251−25	Tap—Oversize, 3/4−10NC for 0.006 oversize insert in magnesium
6798251−26	Tap—Oversize, 1 1/4−18NEF for 0.003 oversize insert in magnesium
6798251−27	Tap—Oversize, 1 1/4−18NEF for 0.006 oversize insert in magnesium
6798251−28	Tap—Oversize, 1/4−20NC for 0.001 oversize stud in stainless steel
6798251−29	Tap—Oversize, 1/4−20NC for 0.0025 oversize stud in stainless steel
6798251−30	Tap—Oversize, 1/4−20NC for 0.0033 oversize stud in stainless steel
6798251−31	Tap—Oversize, 1/4−20NC for 0.0055 oversize stud in stainless steel
6798251−32	Tap—Oversize, 5/16−24NF for 0.0015 oversize stud in stainless steel
6798251−33	Tap—Oversize, 5/16−24NF for 0.003 oversize stud in stainless steel
6798251−34	Tap—Oversize, 5/16−24NF for 0.0045 oversize stud in stainless steel
6798251−35	Tap—Oversize, 5/16−24NF for 0.006 oversize stud in stainless steel
6798251−36	Tap—Oversize, 5/16−24NF for 0.009 oversize stud in stainless steel
6798251−37	Tap—Oversize, 1/4−20NC for 0.0015 oversize stud in steel
6798251−38	Tap—Oversize, 1/4−20NC for 0.003 oversize stud in steel
6798251−39	Tap—Oversize, 1/4−20NC for 0.006 oversize stud in steel
6798251−40	Tap—Oversize, 1/4−20NC for 0.009 oversize stud in steel
6798251−41	Tap—Oversize, 1/4−20NC for 0.012 oversize stud in steel
6798251−42	Tap—Oversize, 1/4−28NF for 0.0011 oversize stud in steel
6798251−43	Tap—Oversize, 1/4−28NF for 0.0022 oversize stud in steel
6798251−44	Tap—Oversize, 1/4−28NF for 0.0033 oversize stud in steel
6798251−45	Tap—Oversize, 1/4−28NF for 0.0044 oversize stud in steel
6798251−46	Tap—Oversize, 1/4−28NF for 0.003 oversize bushing in magnesium
6798251−47	Tap—Oversize, 1/4−28NF for 0.006 oversize bushing in magnesium
6798251−48	Tap—Oversize, 5/16−18NC for 0.0015 oversize stud in magnesium
6798251−49	Tap—Oversize, 5/16−18NC for 0.012 oversize stud in magnesium
6798251−50	Tap—Oversize, 5/16−24NF for 0.0015 oversize stud in magnesium
6798251−51	Tap—Oversize, 5/16−24NF for 0.003 oversize stud in magnesium
6798251−52	Tap—Oversize, 5/16−24NF for 0.006 oversize stud in magnesium
6798251−53	Tap—Oversize, 5/16−24NF for 0.009 oversize stud in magnesium
6798251−54	Tap—Oversize, 5/16−24NF for 0.012 oversize stud in magnesium
6798251−55	Tap—Undersize, 5/16−24NF for 0.001 undersize stud in steel

Support Equipment Required (contd)

Part No./Type Designation	Nomenclature
6798251−56	Tap—Oversize, 5/16−24NF for 0.001 oversize stud in steel
6798251−57	Tap—Oversize, 5/16−24NF for 0.002 oversize stud in steel
6798251−58	Tap—Oversize, 5/16−24NF for 0.003 oversize stud in steel
6798251−59	Tap—Oversize, 5/16−24NF for 0.004 oversize stud in steel
6798251−60	Tap—Oversize, 3/8−16NC for 0.0015 oversize stud in magnesium
6798251−61	Tap—Oversize, 3/8−16NC for 0.012 oversize stud in magnesium
6798251−62	Tap—Oversize, 7/16−14NC for 0.0015 oversize stud in magnesium
6798251−63	Tap—Oversize, 7/16−14NC for 0.012 oversize stud in magnesium
6798251−64	Tap—Oversize, 7/16−20NF for 0.003 oversize bushing in magnesium
6798251−65	Tap—Oversize, 7/16−20NF for 0.006 oversize bushing in magnesium
6798251−66	Tap—Oversize, 9/16−18NF for 0.003 oversize bushing in magnesium
6798251−67	Tap—Oversize, 9/16−18NF for 0.006 oversize bushing in magnesium

NOTE

If an oversize stud is required, use the appropriate oversize thread tap.

a. Studs are oversize only on the studding end pitch diameter. The outside diameter and driver end threads are standard.

b. Oversize studs are identified by dash marks on the driver end, one for a +0.003 in., two for a +0.006 in., three for a +0.009 in., and four for a +0.012 in. or by numbers representing oversize in thousandths of an inch.

6. STUD REPLACEMENT − RETAPPING.

NOTE

Always use the proper type of tap, never one that is oversize on the outside diameter of the threads.

a. Clean or retap stud holes only when the condition of the threads makes it necessary.

7. STUD REPLACEMENT − LUBRICATION.

Materials Required

Part No./Type Designation	Nomenclature
TT−A−580D	Antiseize Compound
——	Sealant, permatex #1372
——	Oil, Mobil DTE heavy

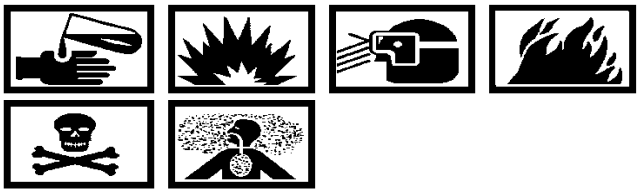

Sealing Compound Permatex 1372 or Loctite 30588 **33**

CAUTION

Studs which are subject to oil pressure or which communicate with oil chambers at the inner end are to be assembled using permatex sealant unless otherwise specified on drawing. Upon completion of installation, all excess compound must be removed.

The amount of compound used in a blind hole shall be kept to a minimum to eliminate the possibility of cracking the casting.

NOTE

Mobil DTE heavy oil is an approved lubricating oil. Other brands of equivalent oil can be used.

a. All studs shall be assembled with lubricating oil having a viscosity of ISO−VG150. Apply to stud threads or hole threads. TT−A−580D antiseize compound is optional on studs in steel or aluminum.

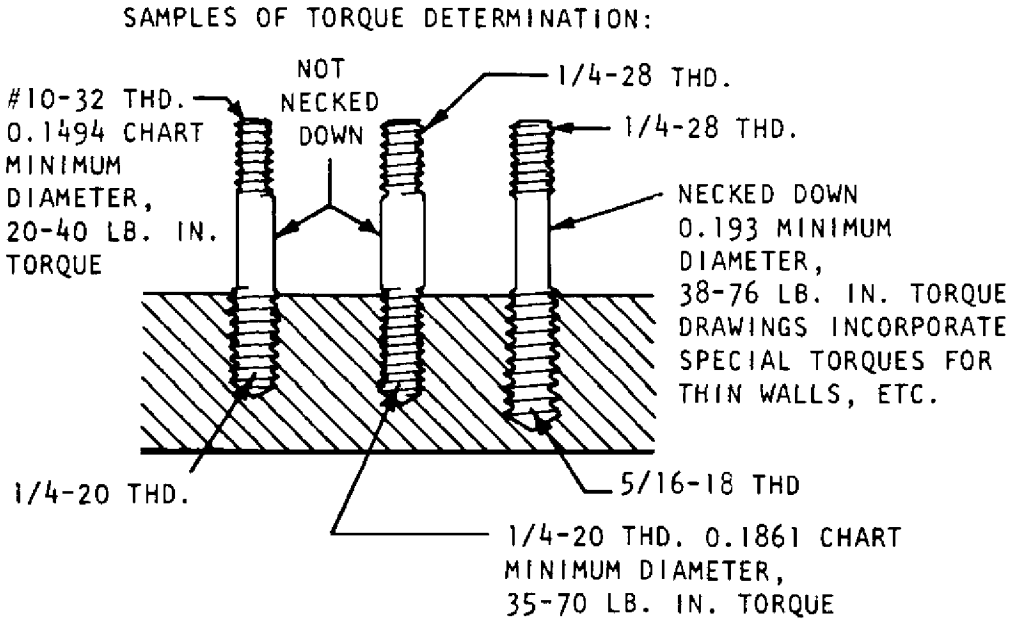

MLS085XD

Figure 1. Stud Driving Torque Limits (Sheet 1 of 2)

8. STUD REPLACEMENT − SELECTION.

a. Select studs which will drive to the specified depth within the minimum and maximum torque limits. Stud driving torque limits are shown (figure 1). These limits are specified and stud minimum diameters are shown for quick reference with necked−down minimum diameters. These diameters may be measured to the nearest 0.01 in.

b. When replacing a stud, carefully control the setting height to ensure proper assembly of parts. Measure adjacent studs in the same location to determine setting height or refer to the appropriate print.

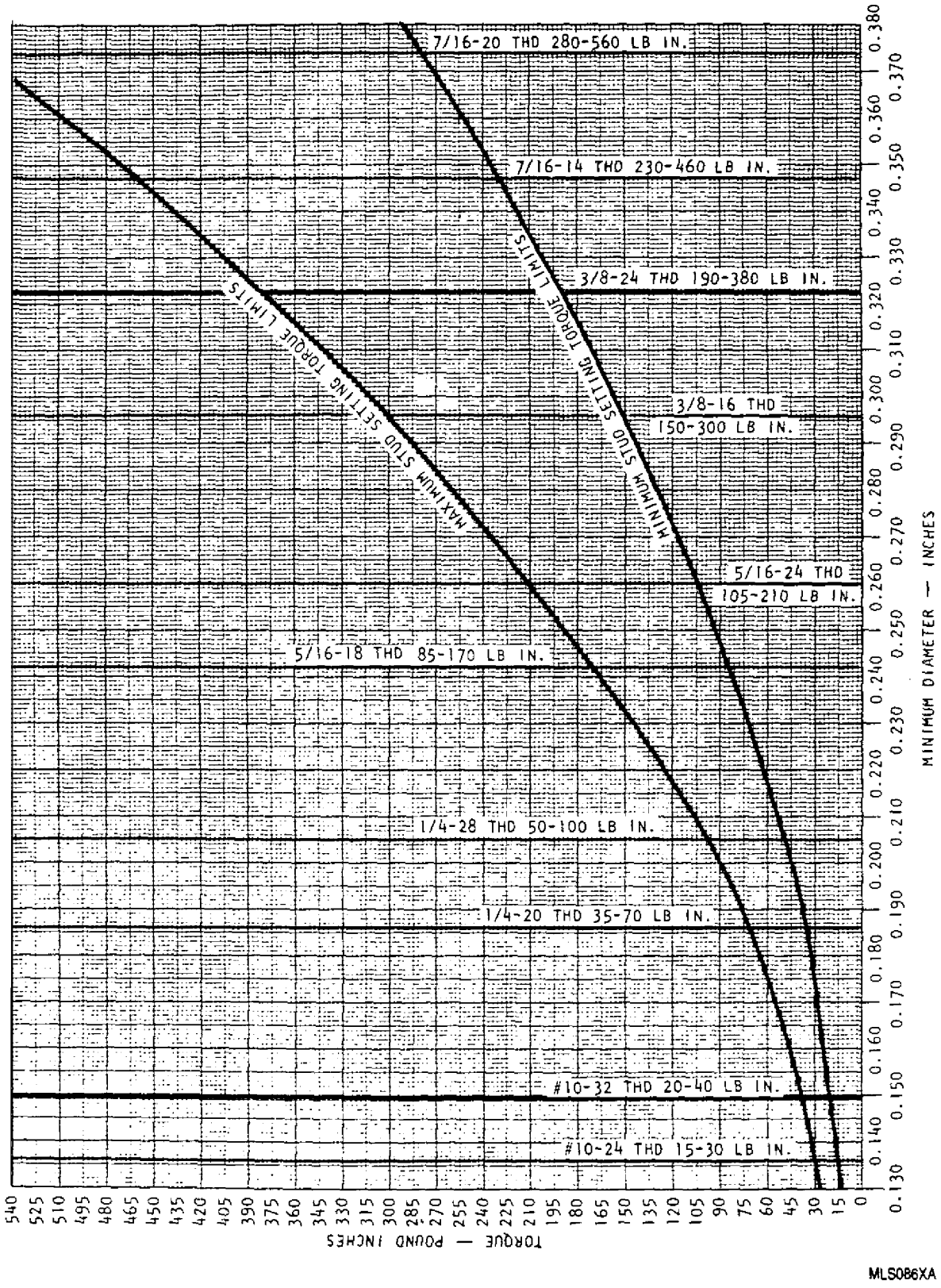

Figure 1. Stud Driving Torque Limits (Sheet 2)

DEPOT MAINTENANCE

INSPECTION

GEARS

Reference Material

Black Oxide Coating . . . . . AMS 2485

Alphabetical Index

Subject **Page No.**

Gears 2
Inspection 2
Introduction 2

Record of Applicable Technical Directives

None

1. **INTRODUCTION.**

2. This work package (WP) provides instructions for inspection of the gears used in the T56−A−427 turboprop engine.

3. **GEARS.**

4. GEARS − INSPECTION.

Materials Required

Specification No./Part No.	Nomenclature
MIL−PRF−23699	Oil, lubricating
MIL−T−81533	Trichloroethane, 1,1,1
O−H−765	Acid, hydrochloric
O−N−350	Acid, nitric
MIL−PRF−680, type II	Solvent, dry cleaning
TT−I−735	Alcohol, isopropyl
O−S−598	Sodium hydroxide
12000260	Scotch Brite
——	Potassium permanganate
——	Trisodium phosphate

CAUTION

Pitted gear teeth can cause premature failure of the gear.

NOTE

Use magnifier to inspect for minute spalling.

a. Because most of the gears and splines will not receive backlash measurements during assembly, carefully inspect the gear teeth for irregular or excessive wear, pitting, spalling, and scuffing as follows:

(1) Condemn a gear if spalling exists; the gear may be acceptable if minute spalling can be removed by reworking.

(2) Healed scuffing is acceptable providing the scuff does not exceed 1/3 of the width of the tooth, the involute contour visually appears unaltered, and no spalling exists. Interrupted line−type scuffing across the entire width of a tooth is also acceptable.

(3) Condemn a gear if tooth damage includes metal displacement to a degree that sub−surface damage is probable.

(4) Condemn a gear if nicks, pits, and dents can be readily felt with a 0.030 in. radius scribe when it is passed lightly over the defect. Condemn gear if defect exceeds 0.060 in. in length, width, or diameter. Nicks, pits, and dents are acceptable if removed by reworking.

(5) Discoloration of gear teeth typically caused by light surface corrosion or nital etch can be removed by hand polishing. Hand polishing using Scotch Brite or equivalent may be used to attain the required blue print surface finish. Regrinding, stoning, or motorized buffing of gear teeth is not permitted.

(6) Gears shall not be reground. Condemn gears requiring grind operations.

b. When a gear is to be replated, reprocess to remove the effect of nital etch as follows:

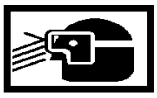

Trichloroethane MIL−T−81533 10

(1) Vapor degrease with MIL−T−81533 1,1,1 trichloroethane.

WARNING

Potassium permanganate and sodium hydroxide are toxic, use only in well ventilated areas. Do not use on heated surfaces or near open flame. Do not allow contact with skin or eyes. Use rubber gloves and goggles or faceshield for protection.

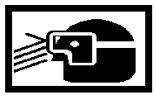

Sodium Hydroxide O−S−598 60

(2) Submerge for five to ten minutes in a solution of 4 oz per gallon of potassium permanganate, 4 oz per gallon of sodium hydroxide and water at 160°F (71°C).

(3) Rinse in cold water.

(4) Dip in concentrated O−H−765 hydrochloric acid for five seconds.

(5) Rinse in cold water.

c. Apply black oxide surface treatment per AMS 2485 to the gears which have undergone repair.

Lubricating Oil, MIL−PRF−23699 **2**

d. Coat acceptable gears with MIL−PRF−23699 lubricating oil and wrap to prevent corrosion while waiting the assembling operation.

DEPOT MAINTENANCE

MAGNETIC PARTICLE AND FLUORESCENT PENETRANT INSPECTION

PROCEDURES

Reference Material

Magnetic Particle Inspection	AMS 2640
Fluorescent Penetrant Inspection	AMS 2645
Magnetic Particle Inspection	MIL−STD−1949
Fluorescent Penetrant Inspection	MIL−STD−6866
Nondestructive Inspection Methods	NAVAIR 01−1A−16

Alphabetical Index

Subject **Page No.**

Fluorescent Penetrant Inspection . . . 8
Procedure . . . 8
Magnetic Particle Inspection . . . 2
Compressor Wheels . . . 6
Compressor Wheels With Blades Installed . . . 5
Blade Defects . . . 6
Wheel Defects . . . 6
Inspection Fluid Requirements . . . 2
Main Drive Gear . . . 7
Pinion Gear . . . 7
Planet Gear . . . 7
Procedure . . . 2
Small Gears . . . 7
Sun Gear . . . 8
Introduction . . . 2

Record of Applicable Technical Directives

None

1. **INTRODUCTION.**

2. This work package provides the magnetic particle inspection and fluorescent penetrant inspection procedures used for the T56−A−427 turboprop engine.

3. **MAGNETIC PARTICLE INSPECTION.**

4. MAGNETIC PARTICLE INSPECTION − INSPECTION FLUID REQUIREMENTS.

Support Equipment Required

Part No./Type Designation	Nomenclature
100 ml	Tube, centrifuge

Materials Required

Specification No./Part No.	Nomenclature
No. 10	Paste, fluorescent
No. 14A	Powder, fluorescent magnetic inspection (CAGE 37676)
——	Bayol D

a. Inspection mixtures will be as follows:

(1) Mixture of No. 10 paste will be 1/10 oz to one gallon of Bayol D.

(2) Mixture of No. 14A fluorescent magnetic inspection powder will be 1/15 oz. to one gallon of Bayol D.

b. Check the concentration of magnetic substance at least once every eight hours of operation by the following method.

(1) Fill a clean 100 milliliter centrifuge tube to the 100 milliliter mark.

(2) Demagnetize the centrifuge tube contents. Allow contents to settle for 45 minutes. Tap lightly to level contents.

(3) The volume of settled magnetic substance shall not be less than 0.05 milliliter or more than 0.10 milliliter.

5. MAGNETIC PARTICLE INSPECTION − PROCEDURE.

CAUTION

During all magnetic operations, adequate precautions must be taken to prevent arcing between the part being magnetized or demagnetized and the framework of the magnetic equipment. Magnetic inspection shall be accomplished per MIL−STD−1949, NAVAIR 01−1A−16, and AMS 2640.

a. For specific parts and assemblies to be inspected by magnetic particle inspection, refer to table 1.

b. Cracks, material defects, or indications which run in a transverse direction to the material flow of any item listed in table 1 are not acceptable, regardless of the location, and are cause for rejection of the part.

Table 1. Magnetic Particle Inspection−Requirements

Nomenclature	Amperage	
	Circular Magnetizing	Longitudinal Magnetizing
BASIC ENGINE		
Bolt—Clevis	300 − 800	1000 − 1200
Fitting—Reduction Gear−to−Power—Section Strut	1000 − 1500	2500 − 3000
Pin—Reduction Gear Eyebolt	1000/in. dia	
Strut Assembly	1000 − 1500 with caution	2000 − 3000
TORQUEMETER AND SAFETY COUPLING ASSEMBLY		
Coupling—Torquemeter	2000 − 2500	2000 − 2500
Nut—Lock	2000 − 2500	2000 − 2500
Safety Coupling—Inner Member	3000 on rod, rotate 120°/shot	2000
Safety Coupling—Outer Member	3000 on rod, rotate 120°/shot	2000

Table 1. Magnetic Particle Inspection−Requirements (contd)

Nomenclature	Amperage	
	Circular Magnetizing	Longitudinal Magnetizing
TORQUEMETER AND SAFETY COUPLING ASSEMBLY (contd)		
Safety Coupling—Intermediate Member	3000 on rod, rotate 120°/shot	2000
Shaft Assembly—Torquemeter Inner	2000 − 2500	2000 − 2500
Shaft Assembly—Torquemeter Outer	2000 − 2500	2000 − 2500
POWER SECTION		
Adapter—Turbine Coupling Shaft	2500 − 3000	1500 − 2000
Bolt—Compressor Tie	800 − 1000	1000 − 500
Bolt—Turbine to Compressor Tie	800 − 1000	1000 − 500
Compressor Wheels—(all stages)	Refer to paragraph 9, this WP.	Refer to paragraph 9, this WP.
Coupling—Compressor Shaft	1500 − 2000, rotate 120°/shot	2000 − 2500
Coupling—Turbine Shaft	1500 − 2000	2000 − 2500
Gear Assembly—Compressor Side	2000 − 2500	2000 − 2500
Gears and Shaft Gears—Accessory Drive Housing	Refer to paragraph 10, this WP.	Refer to paragraph 10, this WP.
Nut—Compressor Rear Bearing	1000/in. dia	
Nut—Tie Bolt Lock	1000/in. dia	
Nut—Turbine Coupling Clamp	1000/in. dia.	
Nut—Turbine Rear Bearing Clamp	1000 in. dia.	
Nut—Spanner−16 (LH) 2.3600	1000 − 1500	1000 − 1500
Shaft Assembly—Turbine Coupling	2500 − 3000	3000 − 4000
Shaftgear Assy—Accessory Drive Side	3000 − 4000	2500−3500
Shaft—Compressor Extension	Refer to paragraph 10, this WP.	Refer to paragraph 10, this WP.
Shaft—Oil Pump Drive	Refer to paragraph 10, this WP.	Refer to paragraph 10, this WP.
Shaft—Rear Scavenge Oil Pump Drive Gear	500 − 800	1000 − 2000
PUMP ASSEMBLY−PRESSURE AND SCAVENGE OIL		
Gear Assembly—Oil Pump Idler	Refer to paragraph 10, this WP.	Refer to paragraph 10, this WP.
Gear—Pressure Oil Pump Drive	Refer to paragraph 10, this WP.	Refer to paragraph 10, this WP.
Shaftgear—Oil Pump Drive	Refer to paragraph 10, this WP.	Refer to paragraph 10, this WP.
Shaft—Off Pump Idler	Refer to paragraph 10, this WP.	Refer to paragraph 10, this WP
PUMP ASSEMBLY−EXTERNAL SCAVENGE OIL		
Gear—Oil Pump Idler Spur	Refer to paragraph 10, this WP.	Refer to paragraph 10, this WP.
Shaft—Oil Pump Drive	Refer to paragraph 10, this WP.	Refer to paragraph 10, this WP.
Shaftgear—Oil Pump Drive Spur	Refer to paragraph 10, this WP.	Refer to paragraph 10, this WP.

Table 1. Magnetic Particle Inspection−Requirements (contd)

Nomenclature	Amperage	
	Circular Magnetizing	Longitudinal Magnetizing
PUMP ASSEMBLY−TURBINE REAR SCAVENGE OIL		
Gear—Oil Pump Drive	Refer to paragraph 10, this WP.	Refer to paragraph 10, this WP.
Gear Assembly—Oil Pump Idler	Refer to paragraph 10, this WP.	Refer to paragraph 10, this WP.
Shaft—Idler Gear	Refer to paragraph 10, this WP.	Refer to paragraph 10, this WP.
Shaft—Rear Scavenge Oil Pump Drive Gear	500 − 800	1500 − 2000
Shaftgear—Turbine Scavenge Oil Pump	500 − 800	1500 − 2000
REDUCTION GEAR ASSEMBLY		
Arm—Upper Mount Swivel	1000 − 1200	2000 − 2500
Bolt—Upper Mount Special	500 − 800	1000 − 1500
Bracket—Lower Mount	2000 − 2500	2500 − 3000
Bracket—Upper Mount	1000 − 1500	1500 − 2500
Carrier—Planet Gear	Full amps on rod−rotate 90°/shot	Full Amps
Cone—Inner Propeller Brake	2000 on rod−rotate 120°/shot	2000 − 2500
Eyebolt—Reduction Gear	800 to 1000	1500 − 2000
Flange—Sun Gear Hub	3000 on rod	3000
Gear—Alternator Drive	Refer to paragraph 10, this WP.	Refer to paragraph 10, this WP.
Gear—Hydraulic Pump Drive	Refer to paragraph 10, this WP.	Refer to paragraph 10, this WP.
Gear—Hydraulic Pump Idler	Refer to paragraph 10, this WP.	Refer to paragraph 10, this WP.
Gear—Hydraulic Pump Idler Drive	Refer to paragraph 10, this WP.	Refer to paragraph 10, this WP.
Gear—Main Drive	Refer to paragraph 11, this WP.	Refer to paragraph 11, this WP.
Gear—Main Idler	Refer to paragraph 10, this WP.	Refer to paragraph 10, this WP.
Gear—Pinion	Refer to paragraph 13, this WP.	Refer to paragraph 13, this WP.
Gear—Planet	Refer to paragraph 12, this WP.	Refer to paragraph 12, this WP.
Gear—Ring	3000 − 4000 on rod	3000 − 3500
Gear—Scavenge Pump Drive (Propeller Shaft)	Refer to paragraph 10, this WP.	Refer to paragraph 10, this WP.
Gear—Scavenge Pump Drive (Rear Housing)	Refer to paragraph 10, this WP.	Refer to paragraph 10, this WP.
Gear—Spline	3000 − 4000 on rod	2000 − 3000
Gear—Starter	Refer to paragraph 10, this WP.	Refer to paragraph 10, this WP.
Gear—Sun	Refer to paragraph 14, this WP.	Refer to paragraph 14, this WP.
Gear—Tachometer Drive Idler	Refer to paragraph 10, this WP.	Refer to paragraph 10, this WP.
Gear—Tachometer Drive Take−off	Refer to paragraph 10, this WP.	Refer to paragraph 10, this WP.
Hub—Sun Gear	4000 − 4500 rotate 120°/shot	3000 − 4000
Member—Propeller Brake Outer	3000 on rod	3000
Propeller Shaft Assembly	Full amp gradually with caution	Full Amps
Shaft—Coupling Outer Member	800 − 1000	1500 − 2000

6. MAGNETIC PARTICLE INSPECTION − COMPRESSOR WHEELS WITH BLADES INSTALLED.

Support Equipment Required

Part No./Type Designation	Nomenclature
MB −3 (144 in., 6000 amps)	Demagnetizer (CAGE 37676)
SB−2824	Inspection unit, magnetic (CAGE 37676)
ZB−26	Black light (CAGE 37676)
105645	Indicator, field, magnetic variation (CAGE 37676)

Materials Required

Specification No./Part No.	Nomenclature
AMS 3161	Kerosene, deodorized
No. 14A	Powder, fluorescent magnetic inspection (CAGE 37676)
MIL−PRF−680, type II	Solvent, dry cleaning

a. Mix fluorescent magnetic particle solution consisting of No. 14A fluorescent magnetic inspection powder and AMS 3161 deodorized kerosene per NAVAIR 01−1A−16.

NOTE

Calibration is not applicable.

b. Set selector switch on demagnetizer unit to DC and adjust current as follows:

(1) Circular field (head shot): 2500 amperes.

(2) Longitudinal field (coil shot): 1500 amperes.

WARNING

Exercise extreme care when handling the wheel assemblies. The blades are sharp and delicate. Improper handling of the wheel assemblies could result in bodily injury and/or damage to the wheel assemblies.

NOTE

The compressor wheel assemblies are to be inspected by the wet continuous method utilizing both circular and longitudinal magnetic fields per NAVAIR 01−1A−16.

c. Circular magnetization:

(1) Place wheel assembly on central conductor, flow on fluorescent magnetic particle solution and magnetize with current as specified in step b.

(2) Inspect wheel for cracks in all areas with special emphasis being placed on areas specified in paragraph 7, this WP. This inspection and those that follow shall be accomplished with a black light in an adequately dark enclosure.

d. Longitudinal magnetization:

(1) Place wheel assembly in the coil so that center axis of wheel is perpendicular to center axis of coil. Flow on fluorescent magnetic particle solution and magnetize with current as specified in step b. Rotate wheel assembly 90° about its center axis and magnetize again using the same current.

(2) Inspect blades for cracks in all areas with special emphasis on areas specified in paragraph 8, this WP.

NOTE

The first−and fourteenth−stage compressor wheel assemblies require an additional magnetization.

(3) Place first− and fourteenth−stage wheel assemblies separately in the coil so that center axis of wheel is parallel to center axis of coil. Flow on fluorescent magnetic particle solution and magnetize with current as specified in step b.

NOTE

All cracks indications shall be visually confirmed using strong white light and 10−power magnification.

(4) Inspect first− and fourteenth−stage wheel shaft splines for cracks in all areas. No cracks acceptable.

NOTE

All wheel assemblies shall be demagnetized after inspection.

e. Pass wheel assembly through demagnetizer.

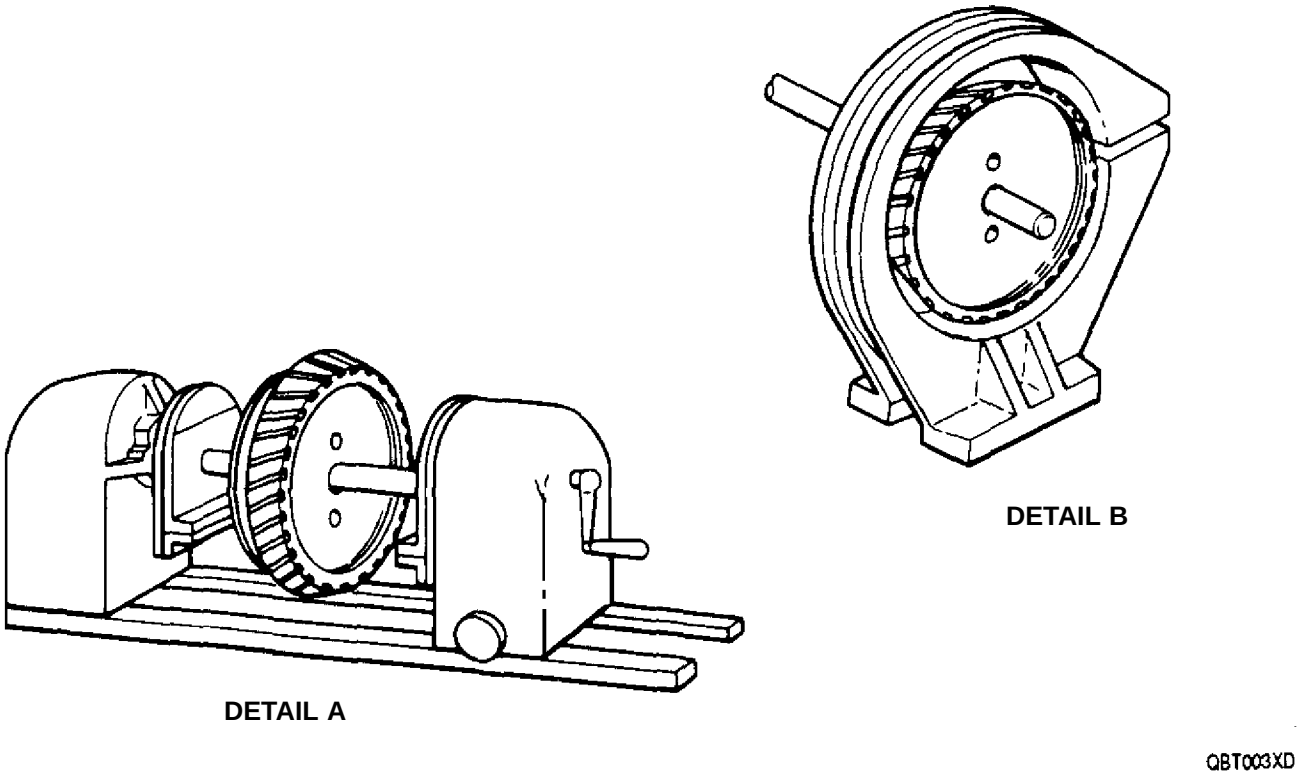

Figure 1. Compressor Wheels Magnetic Inspection

f. After demagnetizing, check residual field strength of wheel assembly with a field strength indicator. Anything greater than two increments is considered excessive and wheel assembly shall be recycled through demagnetizing.

Dry Cleaning Solvent
MIL−PRF−680, Type II **3**

g. Clean parts with MIL−PRF−680, type II dry cleaning fluid.

7. Wheel Defects.

a. Circumferential cracks originating at either of the forward and rear faces of the tangs in the dovetail section.

b. Radial, axial, and circumferential cracks in the front and rear rim splines, where applicable.

c. Circumferential cracks on the outside diameter of the spacer section where applicable.

d. Circumferential, radial and axial cracks in the shaft splines, stages 1 and 14.

8. Blade Defects.

a. Transverse cracks originating at the leading or trailing edges of the airfoil section.

b. Transverse cracks originating at any point in the fillet area between the airfoil and dovetail sections.

9. MAGNETIC PARTICLE INSPECTION−COMPRESSOR WHEELS.

a. Circular magnetism (Detail A, figure 1).

(1) Place selector switch to the DC position.

(2) Place a 12 in. long, 0.625 in. diameter copper rod through the center bore of the wheel. Clamp rod lengthwise between the machine heads under sufficient pressure to ensure positive electrical contact.

(3) Flood entire wheel with inspection fluid, covering both inside and outside surfaces, and magnetize by passing an electrical current of 3500 − 4000 amperes through rod for one second maximum. Remove fluid flow a fraction of a second before the current is broken. The current used should be sufficient to develop indications of defects but not material flow lines.

(4) Inspect wheel in a well darkened area using a black light. Pay particular attention to longitudinal and radial indications. Mark all indications observed. Evaluate the indications under a strong white light and 10X magnification.

b. Longitudinal magnetism (Detail B, figure 1).

(1) Place selector switch to COIL position.

(2) Select a soft iron rod 12 in. long, 0.625 in. diameter and pass through center bore of wheel. Clamp iron rod between the heads only as a means to support wheel in the coil.

(3) Place wheel within the coil with longitudinal axis of the wheel parallel to the longitudinal axis of the coil. The inside diameter of the coil should not exceed 15 in.

(4) Energize coil with one shot at 2500−3000 amperes for one second maximum.

(5) Flood entire wheel with inspection fluid. Remove wheel from coil and allow to drain for one minute.

(6) Inspect wheel in a well darkened area using a black light. Pay particular attention to circumferential and transverse indications. Mark all indications observed. Evaluate all indications under a strong white light and 10X magnification.

NOTE

As an alternate procedure for demagnetizing: pass wheel through a constant alternating tunnel coil withdrawing the wheel while the current is flowing.

c. Demagnetization − 30 Stepdown Method.

(1) Position selector switch to DeMAG position.

(2) Adjust current control switch to one step above 3000 amperes.

(3) Place compressor wheel in the coil or in any standard 5−coil set up. Do not clamp wheel directly between heads because arcing can occur when the demagnetizer is energized.

(4) Energize demagnetizer and check for residual magnetism using a standard field indicator. Anything greater than two increments is considered excessive and wheel shall be recycled through demagnetizing.

10. MAGNETIC PARTICLE INSPECTION − SMALL GEARS.

a. Gears having hollow shaft, or no shaft, shall be placed on a copper or aluminum bar with bar clamped lengthwise between machine heads with sufficient pressure to ensure positive electrical contact.

b. Gears with solid shaft shall have shaft clamped lengthwise between machine heads under sufficient pressure to ensure positive electrical contact.

c. The current used shall be sufficient to develop indications of defects but not of material flow lines. The amount of current should be determined by the rule 1000 amperes for each 1.00 in. of diameter of shaft section. In general, current should be 500 − 1500 amperes.

11. MAGNETIC PARTICLE INSPECTION − MAIN DRIVE GEAR.

a. Use a V−shaped (hairpin) conductor placed snugly over one tooth and magnetize by passing an electrical current through conductor. The current used should be 1500 − 2000 amperes and shall be sufficient to provide indications of defects but not of material flow lines. Magnetize every other tooth. Apply oxide and inspect these teeth.

b. Suspend on copper or aluminum rod, rotate 90° per shot—full amps concurrent to check web; magnetize in coil longitudinally 2500 − 3000 amperes.

12. MAGNETIC PARTICLE INSPECTION − PLANET GEAR.

a. Use a V−shaped (hairpin) conductor on teeth—1500 − 2000 amperes.

b. In coil—rotate 120° per shot—(longitudinal) full amperes.

c. Demagnetize and place gear in coil with gear axis at right angle to coil axis and magnetize full amperes to check for transverse indications on bearing inner rings. Rotate 90°; remagnetize and reinspect.

13. MAGNETIC PARTICLE INSPECTION − PINION GEAR.

a. Use a U−shaped (hairpin) conductor on teeth — 1500 − 2000 amperes.

b. On copper or aluminum rod, rotate 60° per shot at full amperes.

c. In coil—full amperes.

d. All parts to be magnetized by residual methods unless otherwise specified.

14. MAGNETIC PARTICLE INSPECTION − SUN GEAR.

a. Use a U−shaped (hairpin) conductor on teeth — 1500 − 2000 amperes.

b. On a copper or aluminum rod, rotate 90° per shot at full amperes.

15. **FLUORESCENT PENETRANT INSPECTION.**

16. FLUORESCENT PENETRANT INSPECTION PROCEDURE.

Support Equipment Required

Part No./Type Designation	Nomenclature
3X−7X	Glass, magnifying

Materials Required

Specification No./Part No.	Nomenclature
AMS 3065	Compound, corrosion preventive, fingerprint, removing.
AMS 3065	Lubricant, protective
AMS 3155 (ZL−2 or ZL−3)	Oil, fluorescent penetrant
AMS 3156 (ZL−1B)	Oil, fluorescent penetrant
ER−82 or 2E−48	Emulsifier
FP−30A or ZL−30A	Oil, fluorescent penetrant
ZE−2 or ZE−3	Solution, emulsifier
ZL−22	Oil, fluorescent penetrant
ZP−3 or ZP−5	Developer, wet
ZP−4 or ZP−4A	Developer, dry

a. Fluorescent penetrant inspection shall be accomplished per NAVAIR 01−1A−16, MIL−STD−6866, and AMS 2645.

b. Refer to table 2 for parts requiring inspection. Items annotated by an asterisk in table 2 require method B inspection. Parts annotated by a double asterisk in table 2 require method C inspection.

c. The following three methods of inspection are recommended for parts in table 2.

(1) Method A: Water washable oil procedure.

(a) Fluorescent penetrant oil—ZL−1B (AMS 3156).

(b) Dry developer ZP−4 or wet developer ZP−3 or ZP−5.

(2) Method B: Aromatic solvent soluble oil procedure.

(a) Fluorescent penetrant oil ZL−2 (AMS 3155) or ZL−22.

(b) Emulsifier solution ZE−2 or ZE−3.

(c) Dry developer ZP−4 or wet developer ZP−3 or ZP−5.

CAUTION

If the main drive gear is not property dried and recoated with AMS−3065 protective lubricant, corrosion pitting can occur and cause damage to the gear.

NOTE

ZE−2 is considered best for rough surfaces, threads, keyways and critical inspection. ZE−3 is best for open defects, gouges, die marks, etc.

(3) Method C: Use of FP−30A, or ZL−30A instead of ZL−2 or ZL−22 on bearing separators.

NOTE

Proper cleaning is essential to the success of this process. Allow all cleaning agents to evaporate completely before applying penetrant. Temperature of surface being inspected must be 140°F (60°C) or less before the penetrant is applied.

(a) Clean and dry the part before applying penetrant.

NOTE

The plating does not have to be removed unless indications are noted.

The penetrant shall be in contact with the area being inspected for at least 30 minutes. Do not allow penetrant to dry on the part.

(b) Apply penetrant FP−30A or ZL−30A.

NOTE

The one minute period includes the time the part is in the emulsifier plus drainage time and until the wash cycle begins. The emulsifying action is stopped only by washing with water.

(c) Dip part in emulsifier ZE−4B or ER−82. Emulsification time is one minute maximum.

NOTE

The drying temperature shall not exceed 140°F (60°C).

(d) Wash part with water, using a “coarse spray” of water at 70−100°F (21−38°C). Dry part in a circulating warm air drying oven. Do not exceed an oven temperature of 140°F (60°C).

(e) Apply Type ZP−4 or ZP−4A dry developer.

d. Conduct inspection in a darkened area using an approved black light source.

e. Use 3X−7X magnifying glass to view suspected area.

NOTE

Allow 30 minutes for bleed back. Any positive indication that appears after application of the dry developer is cause for part rejection.

f. Reject parts that have positive indications after application of dry developer.

Table 2. Parts Requiring Fluorescent Penetrant Inspection

POWER SECTION
Casing Assembly—Combustion Chamber Inner
Casing Assembly—Combustion Chamber Outer
Casing Liner Assembly—Combustion Chamber Inner
Cone—Inner Exhaust
Liner Assembly—Combustion
**Separators—Bearing (All separable type bearings)
Support Assembly—Turbine Scavenge Oil Pump
COMPRESSOR UNIT
*Bolt—Compressor Tie (Threaded areas only)
Diffuser Assembly—Compressor
Housing Assembly—Compressor Air Inlet
Housing Assembly—Compressor Extension Shaft
Seal—Labyrinth, Rotating Compressor, Rear Primary
Seal—Labyrinth, Rotating Compressor, Rear Secondary
Vane Assemblies—Compressor
Vane Assembly—Compressor Inlet Anti−Icing
Vane Assembly—Fourteenth Stage, Compressor and Outlet
ACCESSORIES DRIVE HOUSING ASSEMBLY
Cover Assembly—Accessories Drive Housing
Housing Assembly—Accessories Drive

Table 2. Parts Requiring Fluorescent Penetrant Inspection (contd)

TURBINE UNIT
*Blade—Turbine (All Stages)
Casing Assembly—Turbine Inlet
Casing—Turbine Vane
Seal—Turbine Front Bearing Labyrinth
TURBINE UNIT (contd)
Seal Assembly—Turbine Rear Bearing Oil
*Spacer—Turbine (All Stages)
Support—Rear Turbine Bearing
Support—Turbine Front Bearing
Support—Turbine Scavenge Oil Pump
Support—Turbine Vane and Seal
Vane Assembly—Turbine (All Stages)
*Wheel Assembly—Turbine (All Stages)
REDUCTION GEAR UNIT
Diaphragm Assembly—Inner Rear Housing
Diaphragm Assembly—Reduction Gear Main
*Eyebolt—Reduction Gear (Threaded areas only)
*Journal—Planet Gear and Bearing (Threaded areas only)
Housing Assembly—Reduction Gear Front
Housing Assembly—Reduction Gear Rear
**Separators (All separable type bearings)
*Shaft—Propeller (Threaded areas only)
*Shaftgear—Spur, Pinion (Threaded areas only)
*Gear—Spur, Main Drive
TORQUEMETER ASSEMBLY
Torquemeter Housing

* Method B inspection required.
** Method C inspection required.

DEPOT MAINTENANCE

PLATING AND SURFACE TREATMENT OF PARTS

Reference Material

Magnetic Particle and Fluorescent Penetrant Inspection - Procedures . . . . . WP 017 00
Cadmium Plating . . . . . AMS 2400
Nickel Plating . . . . . AMS 2403
Electroless Nickel Plate Process . . . . . AMS 2404
Hard Deposit Chromium Plating . . . . . AMS 2406
Copper Strike Silver Plating . . . . . AMS 2412
Anti-Chafing Phosphate Processing . . . . . AMS 2481
Chemical Conversion Coatings on Aluminum and Aluminum Alloys MIL-C-5541
Processes for Pretreatment and Prevention of Corrosion on Magnesium Alloy MIL-M-3171

Alphabetical Index

Subject **Page No.**

Actithane WC 100 Paint 12
Touch-Up Procedure 13
Surface Preparation and Painting 12
AEP32/AEP100 15
Diffusion Heat Treating 18
Surface Preparation and Coating 15
Quality and Inspection Procedures 20
Alseal 500 or Alseal 518 8
Touch-up Procedure 9
Surface Preparation and Coating 8

Alphabetical Index (contd)

Subject **Page No.**

Alseal 585 9
Coating Removal 11
Touch-up Procedure 11
Surface Preparation and Coating 9
Aluminum Alloy 6
Aluminum Paint 11
Touch-up Procedure 12
Surface Preparation and Painting 11
Black Oxide and Black Phosphate Processed Steel Parts 23
Cadmium Touch Up Plating 5
CoCrAlY 23
Corrosion Preventive Resin Coating 14
Chrome Plate 27
Double Shot Peen Repair 28
Plating procedure 27
Stripping Procedure 27
Copper Brush Selective Plating with Dalic or Selectronic 3
Plating Procedure 3
Surface Preparation 3
General 3
Hard-Faced Electroless Nickel Plating 23
Plating Procedure 26
Plating Quality 27
Surface Preparation 23
Introduction 3
Magnesium Alloy 5
Metal Spray Coating 30
Nickel-Cadmium Diffused Plating 29
Nickel Plate-General Purpose 23
SerMetel W 6
Touch-up Procedure 7
Surface Preparation and Coating 6
Silver-Plate-General Purpose 29
Splitline Coating 14

Record of Applicable Technical Directives

None

1. **INTRODUCTION.**

2. This work package (WP) provides the instructions for plating and surface treatment of parts found in the T56−A−427 turboprop engine.

3. **GENERAL.**

4. Replacement of original surface treatment of parts serviced during overhaul is outlined in the following paragraphs. These refinishing procedures will be required at overhaul only when the original coating is damaged and no longer an effective protection against corrosion.

5. **COPPER BRUSH SELECTIVE PLATING WITH DALIC OR SELECTRONIC PROCESS.**

6. COPPER BRUSH SELECTIVE PLATING WITH DALIC OR SELECTRONIC PROCESS − SURFACE PREPARATION.

Materials Required

Specification No./Part No.	Nomenclature
MIL−T−81533	Trichloroethane, 1, 1, 1
——	Gloves, protective rubber

a. Prepare surfaces to be plated as follows:

(1) Surfaces shall be free from products of corrosion, magnetic particles, buffing compounds, abrasives or other foreign matter.

(2) Surface defects such as burrs, nicks, pits, dents, and scuffed metal shall be blended to remove sharp edges.

(3) Any non−adherent metal must be removed. Edges of any existing plating shall be smoothly blended into adjoining area.

Trichloroethane MIL−T−81533 **10**

(4) Clean part to be plated by vapor degreasing with MIL−T−81533 1,1,1 Trichloroethane.

(5) Mask areas not to be plated.

7. COPPER BRUSH SELECTIVE PLATING WITH DALIC OR SELECTRONIC PROCESS − PLATING PROCEDURE.

Materials Required

Specification No./Part No.	Nomenclature
——	Activate−Activator No. 2 (CAGE 13929)
——	Activate−Activator No. 3 (CAGE 13929)
——	Electro−clean (CAGE 13929)
——	Etch−Activator No. 2 (CAGE 13929)

CAUTION

Copper plating on aluminum parts may present a softer surface than the parent metal when thicker plating is applied.

NOTE

Copper brush plate aluminum parts per table 1. Copper brush plate low alloy carbon steel parts per table 2.

The copper plating shall be adherent to base metal, relatively smooth, free from pits, blisters and coating imperfections detrimental to performance of part.

a. When applicable, rotate part at 50−75 ft. per min. on a rotating mechanism. When plating a part not rotating, use a sweeping circular motion with stylus.

b. Use a moderate speed in moving stylus. Too slow a motion will result in a burned deposit while too fast a motion will result in decreased efficiency or no deposit. Experience will dictate best brushing speed.

c. Rotate stylus so that all areas of swab are used. This prevents burning of part by arcing due to wearing through of one area of stylus.

d. Keep stylus moistened at all times during brushing operation. The degree of wetness is best determined by experience.

Table 1. Copper Brush Plating of Aluminum Parts

	Operation	Alameda Code	Voltage	Polarity	Remarks
1.	Glass Bead blast				
*2.	Electro−clean	1010	10	+	20−30 sec.
3.	Water rinse				
*4.	Etch−Activator No. 2	1022	12	−	grey to black color
5.	Water rinse				
*6.	Activate−Activator No. 3	1023	12	+	until uniform light surface
7.	Water rinse				
8.	Nickel strike	2080	12	+	0.00005−0.0001 in. thick
9.	Water rinse				
*10.	Copper brush plate	2051	10	+	to size
11.	Rinse thoroughly in cold water, dry and remove mask				Hot water rinse following cold water rinse and air blast may be used to facilitate drying.

***CAGE 13929**

Table 2. Copper Brush Plating of Low Alloy Carbon Steel Parts

	Operation	Alameda Code	Voltage	Polarity	Remarks
1.	Electro−clean	1010	10−20	−	15−60 sec.
2.	Water rinse				
*3.	Activate−Activator No. 2	1022	10−15	+	30−60 sec.
4.	Water rinse				
*5.	Activate−Activator No. 3	1023	15−25	+	30−60 sec.
6.	Water rinse				
*7.	Copper brush plate	2051	10−15	+	to size
8.	Rinse thoroughly in cold water, dry and remove mask				Hot water rinse following cold water rinse and air blast may be used to facilitate drying.
9.	Hydrogen embrittle−ment relief				Heat to 365−385°F (185−196°C) in a circulating air furnace and hold at heat for 3 hours minimum.

***CAGE 13929 or 11924**

8. **CADMIUM TOUCH UP PLATING.**

9. Touch up by brushing with cadmium plating any areas of a part which were originally cadmium−plated and which, due to damage, no longer afford effective protection against corrosion.

Materials Required

Specification No./Part No.	Nomenclature
MIL−T−81533	Trichloroethane, 1,1,1
O−S−598	Sodium Hydroxide
——	Cadmium (as metal)
——	Cyanide, Total
——	Gloves, protective rubber

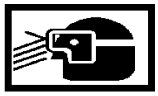

Trichloroethane MIL−T−81533 **10**

a. Clean part to be plated by vapor degreasing with MIL−T−81533, 1,1,1 Trichloroethane.

b. Process the part to be plated as follows:

(1) Connect an anode to the positive terminal of the current source. Anodes are low carbon steel strips covered with cotton, toweling, or felt. An electroplating brush may be used if available.

WARNING

The plating solution is detrimental to skin tissue, and hydrocyanic acid gas (which is very poisonous) results from plating with insoluble anodes. Therefore, suitable protective clothing must be provided and the work area must be adequately ventilated. If contact is made with plating solution, immediately wash contaminated skin areas with cold water.

Sodium Hydroxide O−S−598 **60**

(2) Saturate the anode covering (or the brush) with the plating solution listed in table 3. The covering must be saturated at all times during the plating process.

Table 3. Cadmium plating solution

Cadmium (as metal):	2.75−3.25 oz/gal
Total Cyanide:	12.00−14.00 oz/gal
Sodium Hydroxide:	1.75−2.25 oz/gal
Ratio:	3.7−5.1 parts cadmium to one part total cyanide
Temperature:	Room

(3) Connect the part to be plated to the negative terminal of the current source.

(4) Apply cadmium plate, as required, by moving the anode over the damaged area. Plate for approximately ten minutes, or until the original plating thickness is restored or manufacturing requirements are met. Remove the contacts.

Compressed Air **57**

(5) Rinse part with cold running water, preferably from a hose or other pressurized source. Dry the part with compressed air.

10. **MAGNESIUM ALLOY.**

a. Touch up by brushing with a Type 1 chrome pickle solution per MIL−M−3171.

b. Rinse with clean water and retouch with proper paint if the surface was originally painted.

11. **ALUMINUM ALLOY.**

Materials Required

Specification No./Part No.	Nomenclature
MIL−T−81533	Trichloroethane, 1,1,1
TT−P−1757	Primer, zinc chromate
——	Alodine No. 1200 (CAGE 84063)
——	Gloves, protective rubber

NOTE

If surface was originally uncoated, no coating of reworked areas is necessary.

The optimum application time of the solution with aluminum varies with bath concentration, room temperature, and the temperature of the metal being treated. These variables determine the type of coating produced. If the coating produced is soft and powdery, the solution is too strong or the reaction time is too long; water dilution is indicated. If little or no visible coating forms, the solution concentration or time of contact should be increased.

Trichloroethane MIL−T−81533 10

a. If surface was originally anodized but not painted, clean the damaged area with MIL−T−81533 1,1,1 Trichloroethane to remove grease, dirt, or other foreign matter. Rinse with water. Apply Alodine No. 1200, or approved alternate, per MIL−C−5541.

Compressed Air 57

b. Following application of the solution, rinse the part with water and dry with compressed air.

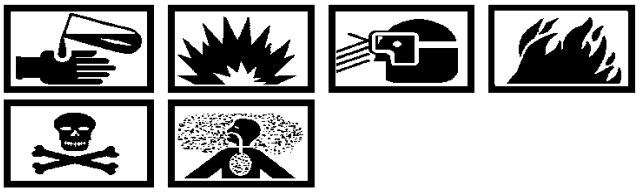

Zinc Chromate Primer TT−P−1757 21

c. If surface was originally painted (with or without anodizing) touch up by brushing rework areas with TT−P−1757 zinc chromate primer and repaint.

12. **SerMetel W.**

13. This procedure is for application of heat and corrosion resistant SerMetel W aluminum coating. See paragraph 16, this WP, for alternate coating procedure. This coating provides a part with oxidation and corrosion protection for temperatures up to 1200°F (649°C).

14. SerMetel W − SURFACE PREPARATION AND COATING.

Materials Required

Specification No./Part No.	Nomenclature
Metcolite C	Grit, aluminum oxide (CAGE 39918)
MIL−T−81533	Trichloroethane, 1,1,1
——	Swab, cotton
——	Coating, aluminum, Sermetel W (CAGE 78710)
——	Gloves, insulated
——	Gloves, protective rubber

Trichloroethane MIL−T−81533 10

a. Degrease parts using MIL−T−81533 1,1,1 Trichloroethane to remove oil, grease and other organic deposits.

NOTE

All old paints, mill scale, rust, or other tightly adherent deposits must be removed by a suitable method such as dry grit blasting or vapor blasting.

b. Grit blast using clean Metcolite C aluminum oxide grit.

NOTE

The time interval between the cleaning process and the application of the aluminum coating must be kept to a practicable minimum. If surfaces become contaminated by handling or coating delay, part must be degreased.

c. Thoroughly mix the pigment and binder until all solids have been dispersed into the vehicle.

NOTE

The finished film thickness shall be 0.0015−0.003 in.

d. Apply two coats of SerMetel W aluminum Coating by spraying, brushing, rolling, or dipping.

e. Dry each coat at 635−665°F (335−352°C) for 30 minutes.

f. Install compressor case support plates.

WARNING

Heated parts can cause skin damage (Burns). Use clean insulated gloves when handling parts.

NOTE

The post−cure bake is required in order to provide a sacrificial corrosion protection. If this cannot be performed, the part must be burnished.

g. Post−cure bake at 985−1015°F (529−546°C) for 90 minutes and cool to room temperature.

h. Check for properly cured surface by the following methods:

(1) Wipe cured surface with a cotton swab dampened with water. A swab turning green in color indicates an improperly cured coating.

(2) Cured coating must be continuous, uniform in color (matte gray) and thickness, and free from bubbles, pin holes, runs, sags, and other surface imperfections.

15. SERMETEL W − TOUCH−UP PROCEDURE.

Materials Required

Specification No./Part No.	Nomenclature
MIL−T−81533	Trichloroethane, 1,1,1
SerMetel W	Coating, aluminum (CAGE 78710)
SerMetel 196	Coating, aluminum (CAGE 78710)
——	Gloves, protective rubber

a. Damaged aluminum coating may be reconditioned as follows:

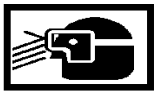

Trichloroethane MIL−T−81533 10

(1) Thoroughly swab damaged areas with MIL−T−81533 1,1,1 Trichloroethane and air dry for 5−10 minutes.

(2) Abrade the damaged area into a slightly larger area with feathered outsides.

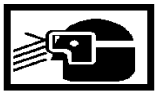

Compressed Air 57

(3) Clean abraded areas with MIL−T−81533 1,1,1 Trichloroethane and dry with clean compressed air.

(4) Use one of the following aluminum coatings:

(a) Apply SerMetel W aluminum Coating and cure each coat as specified in the preceding instructions.

(b) Apply SerMetel 196 aluminum coating in two coats with a 30−60 minute air dry period between coats. Parts must air dry for 72 hours prior to use.

16. **ALSEAL 500 OR ALSEAL 518.**

17. This procedure is for application of a corrosion and heat resistant aluminum coating. See paragraph 12, this WP, for alternate coating procedure. This coating provides a part with oxidation and corrosion protection for temperatures up to 1200°F (649°C).

18. ALSEAL 500 OR ALSEAL 518 − SURFACE PREPARATION AND COATING.

Materials Required

Specification No./Part No.	Nomenclature
Alseal 500	Coating, aluminum (CAGE 53012)
Alseal 518	Coating, aluminum (CAGE 53012)
Metcolite C	Grit, aluminum oxide, No. 12−36 (CAGE 39918)
MIL−T−81533	Trichloroethane, 1,1,1
1.5 volt	Battery, DC dry cell
1.5 volt	Bulb, light
——	Swab, cotton
——	Gloves, protective rubber
——	Gloves, insulated

Trichloroethane MIL−T−81533 10

a. Degrease parts using MIL−T−81533 1,1,1 Trichloroethane to remove oil, grease and other organic deposits.

NOTE

All old paints, mill scale, rust, or other tightly adherent deposits must be removed by a suitable method such as dry grit blasting or vapor blasting.

b. Grit blast using clean Metcolite C aluminum oxide grit.

NOTE

The time interval between the cleaning process and the application of the aluminum coating must be kept to a practicable minimum. If surfaces become contaminated by handling or coating application is delayed, part must be degreased.

c. Thoroughly mix the pigment and binder until all solids have been dispersed into the vehicle.

NOTE

The finished film thickness shall be 0.0010−0.0040 in. Irregular coating edges due to masking are permissible.

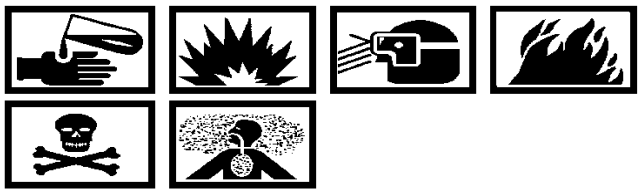

Alseal 500 55

d. Apply two uniform coats of Alseal 500 or Alseal 518 by spraying.

e. Dry each coat at 310−340°F (154−171°C) for 30 minutes.

f. Install compressor case support plates.

WARNING

Heated parts can cause skin damage (Burns). Use clean insulated gloves when handling parts.

NOTE

The post−cure bake is required in order to provide a sacrificial corrosion protection. If this cannot be performed, the part must be burnished.

g. Post−cure bake at 975−1025°F (524−552°C) for 90 minutes and cool to room temperature.

h. Check for properly cured surface by the following methods:

(1) Wipe cured surface with a cotton swab dampened with water. A swab turning green in color indicates an improperly cured coating.

(2) Place two probes connected in series with a 1.5 volt DC dry cell battery and a suitable light bulb in contact with cured coated surface. Failure to light the bulb indicates an improperly cured coating.

(3) Cured coating must be continuous, uniform in color (matte gray) and thickness, and free from bubbles, pin holes, runs, sags, and other surface imperfections.

19. ALSEAL 500 OR ALSEAL 518 − TOUCH−UP PROCEDURE.

Materials Required

Specification No./Part No.	Nomenclature
Alseal 500	Coating, aluminum (CAGE 53012)
Alseal 518	Coating, aluminum (CAGE 53012)
MIL−T−81533	Trichloroethane, 1,1,1
SerMetel W	Coating, aluminum (CAGE 78710)
——	Gloves, protective rubber

a. Damaged aluminum coating may be reconditioned as follows:

Trichloroethane MIL−T−81533 **10**

(1) Thoroughly swab damaged areas with MIL−T−81533 1,1,1 Trichloroethane and air dry for 5−10 minutes.

(2) Abrade the damaged area into a slightly larger area with feathered outsides.

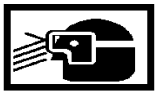

Compressed Air **57**

(3) Clean abraded areas with MIL−T−81533 1,1,1 Trichloroethane and dry with clean compressed air.

(4) Use one of the following aluminum coatings:

(a) Apply SerMetel W aluminum coating and cure each coat as specified in the preceding instructions.

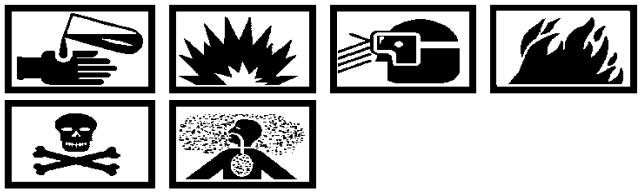

Alseal 500 **55**

(b) Apply Alseal 500 aluminum coating and cure each coat as specified in the preceding instructions.

(c) Apply Alseal 518 aluminum coating and cure each coat as specified in the preceding instructions.

20. **ALSEAL 585.**

21. This procedure is for application of a corrosion and heat resistant aluminum coating. This coating provides a part with oxidation and sacrificial corrosion protection at temperatures up to 1200°F (649°C).

22. ALSEAL 585 − SURFACE PREPARATION AND COATING.

Materials Required

Specification No./Part No.	Nomenclature
Alseal 585	Coating, aluminum
Metcolite C	Grit, aluminum oxide, No. 12−36 (CAGE 39918)
MIL−T−81533	Trichloroethane, 1,1,1
——	Swab, cotton
——	Gloves, protective rubber

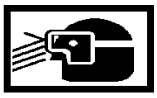

Trichloroethane MIL−T−81533 10

a. Degrease parts using MIL−T−81533 1,1,1 Trichloroethane to remove oil, grease and other organic deposits.

NOTE

All old paints, mill scale, rust, or other tightly adherent deposits must be removed by a suitable method such as dry grit blasting or vapor blasting.

b. Grit blast using clean Metcolite C aluminum oxide grit.

NOTE

The time interval between the cleaning process and the application of the aluminum coating must be kept to a practicable minimum. If surfaces become contaminated by handling or coating application is delayed, part must be degreased.

c. Mask surfaces not designated to be coated. Components with internal chambers that are not to be coated may be plugged and internally pressurized to 2−5 psi with air.

NOTE

The container used shall be of a size containing a sufficient quantity of Alseal 585 aluminum pigment binder and water to allow total submergence of the part to be coated. The coating material shall be continually agitated.

d. Submerge the part and very slowly rotate (tumble) the part to minimize entrapped air until aft specified surfaces are coated.

e. Withdraw the part and allow to drain for 4−10 minutes. Continue rotating part to allow drainage from crevasses or cavities.

f. Repeat steps d. and e. except drain for at least 10 minutes. Continue rotating parts until dry.

NOTE

If humidity is high, it may be necessary to dry at 150°F (66°C).

g. Dry at room temperature for at least 15 minutes (no maximum time) or until color is a uniform light gray.

WARNING

Heated parts can cause skin damage (Burns). Use clean insulated gloves when handling parts.

h. Dry aluminum coating by heating to 310−340°F (154−171°C), holding at temperature for 30 minutes minimum, and cooling to room temperature.

NOTE

Coating may be omitted from areas designated for identification marking. When a coating thickness is not specified, a film thickness of 0.0010−0.0040 in. Shall apply.

No requirements are established for thickness of coating for holes, deep recesses, bases of angles, internal threads, vane edges, hidden surfaces, and other areas in which a controlled coating cannot be obtained under normal application techniques.

i. Apply second coat by following steps c., d., e., f., and g.

CAUTION

Coating cured at 985−1015°F (529−546°C) must be electrically conductive with ohmmeter probes. Parts that cannot be cured at 985−1015°F (529−546°C) must be burnished.

j. Post cure the aluminum coating by heating to 985−1015°F (529−546°C). Hold at temperature 90 minutes minimum and cool to room temperature.

k. Check for properly cured surface by the following methods:

(1) Wipe cured surface with a cotton swab dampened with water. A swab turning green in Color indicates an improperly cured coating.

(2) Cured coating must be continuous, uniform in color (matte gray) and thickness, and free from bubbles, pin holes, runs, sags, and other surface imperfections.

23. ALSEAL 585 − COATING REMOVAL.

Materials Required

Specification No./Part No.	Nomenclature
——	Solution, caustic

WARNING

Caustic solution is toxic and generates hydrogen gas, use only in well ventilated areas. Do not use on heated surfaces or near open flame. Do not allow contact with skin or eyes. Use rubber gloves and goggles or faceshield for protection.

a. If it should be necessary to remove the cured coating, it can be stripped by immersing in a hot (approximately 150°F (66°C)) caustic solution.

24. ALSEAL 585 − TOUCH−UP PROCEDURE.

Materials Required

Specification No./Part No.	Nomenclature
Alseal 585	Coating, aluminum
MIL−T−81533	Trichloroethane, 1,1,1
SerMetel 196	Coating, aluminum (CAGE 78710)

a. Recondition damaged aluminum coating as follows:

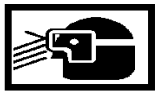

Trichloroethane MIL−T−81533 10

(1) Thoroughly swab damaged area with MIL−T−81533 1,1,1 Trichloroethane and air dry for 5−10 minutes.

(2) Abrade the damaged area into a slightly larger area and with feathered outsides.

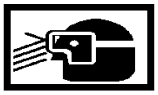

Compressed Air 57

(3) Clean abraded areas with MIL−T−81533 1,1,1 Trichloroethane and dry with clean compressed air.

b. Use one of the following aluminum coatings:

(1) Apply SerMetel 196 in two coats with a 30−60 minute air dry period between coats. Parts must air dry for 72 hours prior to use.

(2) Apply Alseal 585 in one coat and cure as specified in paragraph 20, this WP.

25. **ALUMINUM PAINT.**

26. This procedure is for application of heat and corrosion resistant aluminum paint to metal parts where operating temperatures do not exceed 800°F (427°C), as protection against heat oxidation and atmospheric corrosion.

27. ALUMINUM PAINT − SURFACE PREPARATION AND PAINTING.

Materials Required

Specification No./Part No.	Nomenclature
MIL−T−81533	Trichloroethane, 1,1,1
——	Paint, heat and corrosion resis−tant aluminum.
——	Gloves, insulated

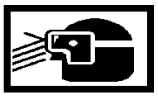

Trichloroethane MIL−T−81533 10

NOTE

Do not handle the parts with bare hands or dirty gloves prior to painting.

a. Vapor degrease part in MIL−T−81533 1,1,1 Trichloroethane.

WARNING

Heated parts cans cause skin damage (Burns). Use clean insulated gloves when handling parts.

b. Apply paint in two coats by spraying to a minimum finished dry film thickness of one mil. The first coat shall be thoroughly dried by baking 30 minutes at 385−415°F (196−213°C).

c. After application and sufficient air drying of the second coat, bake for one hour at 490−510°F (254−266°C).

28. ALUMINUM PAINT − TOUCH−UP PROCEDURE.

Materials Required

Specification No./Part No.	Nomenclature
MIL−T−81533	Trichloroethane, 1,1,1

a. When paint is damaged by abrasions and not by loss of adhesion of the coating, recondition as follows:

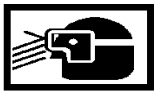

Trichloroethane MIL−T−81533 10

b. Clean area with MIL−T−81533 1,1,1 Trichloroethane.

c. Air dry 5−10 minutes.

d. Apply paint to exposed metal. A drying period of at least one hour at room temperature is required. Baking is desirable but not required.

e. The paint coating shall be continuous, uniform and free from bubbles, pin holes, runs, sags, and other surface imperfections.

29. **ACTITHANE WC 100 PAINT.**

30. This procedure covers the application of a corrosion, abrasion and impact−resistant paint and is procured as a two component package. Applied color is gray.

31. ACTITHANE WC 100 PAINT − SURFACE PREPARATION AND PAINTING.

Materials Required

Specification No./Part No.	Nomenclature
MIL−C−5541	Alodine No.1200
MIL−M−3171, Type III	Chrome Pickle Solution
MIL−PRF−680, type II	Solvent, dry cleaning
WC 100	Paint, Actithane (CAGE 11931)
——	Dow 7

NOTE

The pot life of the blended paint/activator is approximately eight hours at room temperature. The pot life may be extended by keeping the container tightly covered and under refrigeration.

a. Prior to application, mix as follows:

(1) Thoroughly blend three parts paint with one part activator. Let stand approximately 15 minutes before using.

b. Prior to painting, prepare surfaces as follows:

(1) Aluminum alloy—Anodize

(2) Magnesium alloy—Dow 7, HAE, or chrome pickle.

(3) Steel—dry or wet grit blast .

Dry Cleaning Solvent
MIL−PRF−680, Type II 3

c. Parts contaminated with oil or other foreign materials after surface treatment shall be wiped clean with MIL−PRF−680, Type II dry cleaning solvent.

d. Mask as required or specified.

NOTE

Total thickness of the two coats must be between 0.002−0.005 in. thick. Coating must be continuous, uniform and free from bubbles, pin holes, runs, sags and other surface imperfections.

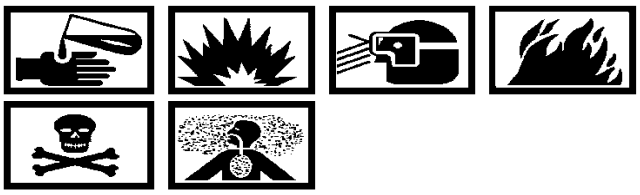

Actithane Paint WC 100 **11**

e. Spray on first coat of Actithane WC 100 paint.

f. Air dry or heat cure as follows:

(1) Air dry: Allow at least 30 minutes and not more than 18 hours drying time between coats.

WARNING

Heated parts cans cause skin damage (Burns). Use clean insulated gloves when handling parts.

(2) Heat curing: Allow 15 minutes air drying then bake in an electrically heated oven at 150−175°F (66−79°C) for 10 minutes. Allow to cool to room temperature before applying second coat.

g. Spray on second coat of Actithane WC 100 paint.

h. Air dry or heat cure as follows:

(1) Air dry: Allow a minimum of 18 hours drying time prior to handling.

(2) Heat curing: Allow 15 minutes air drying then bake in an electrically heated oven at 290−310°F (143−154°C) for 20 minutes minimum.

32. ACTITHANE WC 100 PAINT − TOUCH−UP PROCEDURE.

Materials Required

Specification No./Part No.	Nomenclature
H−251	Actithane (CAGE 11931)
MIL−C−5541	Alodine No.1200
MIL−M−3171, Type III	Chrome Pickle Solution
WC 100	Paint, Actithane (CAGE 11931)
——	Cloth, emery

a. Repair damaged coatings as follows:

NOTE

If bare magnesium or aluminum alloy is exposed, treat bare magnesium alloy with a MIL−M−3171, Type III chrome pickle solution and the bare aluminum alloy with MIL−C−5541 alodine No. 1200. Air dry.

(1) Abrade the damaged area and surrounding area with emery cloth.

Paint Thinner Actithane H 251 **43**

(2) Wipe the abraded areas with Actithane H−251.

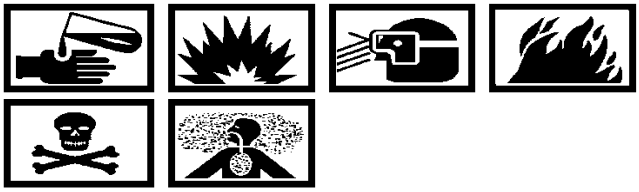

Actithane Paint WC 100 **11**

(3) Brush or spray paint the prepared surfaces with Actithane WC 100 and cure.

33. **SPLITLINE COATING.**

Materials Required

Specification No./Part No.	Nomenclature
O−A−51	Acetone
PL32M Hylomar	Sealing compound
3M−EC−776 (alternate)	Sealant

Acetone O−A−51 **61**

a. Clean splitline surfaces to be joined with acetone or other suitable solvent to remove oil, grease, dirt or other foreign material.

CAUTION

Use care to ensure that sealant does not enter seal ring cavities, blind holes or oil passages during application.

3M−EC−776 must not be used on any part of reduction gearbox.

Sealing Compound PL32M Hylomar **40**

b. Apply the PL32M sealant or alternate 3M−EC−776 to both surfaces to be joined in a thin even coat.

c. Allow sufficient drying time.

d. Join surfaces and tighten to required torque. Wait ten minutes and retorque. Repeat as required until 95% or more of required torque is maintained. (QA)

e. Remove any excess sealant.

34. **CORROSION PREVENTIVE RESIN COATING.**

Materials Required

Specification No./Part No.	Nomenclature
AMS 3135	Coating, resin, silicon
MIL−PRF−3043 (AMS 3132)	Resin coating
——	Solvent, petroleum

a. Apply a protective coating to reworked areas for corrosion prevention by using either of the following methods.

Resin Coating Thinner MIL−PRF−3043 **40**

(1) MIL−PRF−3043 (AMS 3132) corrosion preventive resin coating.

NOTE

Do not handle the parts with bare hands or dirty gloves prior to coating.

(a) Clean the reworked area by washing with petroleum solvent.

Compressed Air **57**

(b) Dry in air or with chemically−dried compressed air.

NOTE

Coating shall be continuous, uniform and free from bubbles, fatty edges, pin holes, runs, sags and other surface imperfections. The finished thickness of coating shall be 0.0006−0.0010 in.

(c) Spray the area with MIL−PRF−3043 resin coating. When spraying is impractical, brushing will be permissible.

WARNING

Heated parts cans cause skin damage (Burns). Use clean insulated gloves when handling parts.

(d) Air dry the area for 15 minutes minimum and then oven bake at 330-340°F (166-171°C) for 20 minutes minimum or 290-310°F (143-154°C) for 50 minutes minimum.

(2) AMS 3135 silicon resin coating.

NOTE

Do not handle the parts with bare hands or dirty gloves prior to coating.

(a) Clean the reworked area by washing with petroleum solvent.

Compressed Air **57**

(b) Dry in air or with chemically-dried compressed air.

NOTE

Allow sufficient air dry time between coats to prevent sagging when the following coat is applied. Application shall be continuous, uniform, and free from bubbles, heavy edges, pin holes, runs, sags, and other imperfections. The finished thickness of coating shall be 0.0006-0.0010 in.

(c) Spray or brush on two coats in amounts to thoroughly wet the surface.

(d) After air drying, the part shall be baked at either 425°F (218°C) for 45 minutes, 400°F (204°C) for one hour, or 300°F (149°C) for 3.5 hours, and air cooled.

35. **AEP 32/AEP 100.**

NOTE

The applidation of AEP 32 or AEP 100 must be accomplished only by a facility licensed and certified by the OEM or specifically approved by the USN T56-A-427 FST.

36. This is a process for coating the third-stage blades.

37. AEP 32/AEP 100 - SURFACE PREPARATION AND COATING.

Support Equipment Required

Part No./Type Designation	Nomenclature
——	Blower, exhaust

Materials Required

Specification No./Part No.	Nomenclature
EPDM	Ethylene Propylene (CAGE 7V963)
MIL-T-81533	Trichloroethane, 1,1,1
No. 49-5392-2	Liquid Envelope (CAGE 58361)
RTV	Rubber, Silicone (CAGE 01139)
Stainless No. 2	Methanol
TT-I-735	Alcohol, isopropyl
E-1003	Microsol (CAGE 01058)
——	Cobalt Nitrate Hexahydrate (CAGE 64950)
——	Isopropanol (anhydrous) (CAGE 0L407)
——	AL 123 powder (CAGE 4G314)
——	AL 131 powder (CAGE 4G314)
——	Solvent, Nitromethane (CAGE 2W915)
——	Zein (CAGE 9S696)

WARNING

The electrophoretic coating process uses a high DC voltage in the application of the coating. The coating facilities must be designed and constructed to provide the operation with maximum protection from electrical shock.

The electrophoretic coating solution is flammable and emits vapors which can reach an explosive concentration. Excessive breathing of the fumes may cause toxic effects. The exhaust blower must be on at all times while the coating room is occupied and must be on during all phases of the coating operation. The coating solution tanks must be kept covered at all times to minimize evaporation.

Trichloroethane MIL-T-81533 **10**

NOTE

The application of AEP 32 or AEP 100 must be accomplished only by a facility licensed and certified by the OEM or specifically approved by the USN T56-A-427 FST.

Prior to masking, a suitable quantity of each component configuration shall be weighed for use in monitoring the weight of the dried "green" coating deposit.

a. Vapor degrease parts with MIL-T-81533 1,1,1 Trichloroethane.

b. Strip parts IAW best commercial practice.

c. Place the blades in blade masks (table 4) and coating fixtures, and check for electrical contact with continuity tester.

Table 4. Recommended Masking Materials

Materials
Liquid Envelope NO. 49-5392-2
Microsol E-1003
RTV Silicon Rubbers
Ethylene Propylene EPDM

NOTE

Refer to table 5 for AEP bath composition, and table 6 for material grade or specification requirements.

d. Prepare coating solution as follows:

WARNING

Solvents are toxic, use only in well ventilated areas. Do not use on heated surfaces or near open flame. Do not allow contact with skin or eyes. Use rubber gloves and goggles or faceshield for protection. To prevent plasticizer contamination, avoid the use of plastics such as Tygon and PVC.

(1) Mix bulk solvents in a volume sufficient to make up the coating solution plus a convenient amount to add for evaporation losses; 60% by weight or 68.5% by volume of isopropanol plus 40% by weight or 31.5% by volume of nitromethane.

(2) Dissolve the zein in the above solvent mixture by slow addition and continuous mild agitation. Add sufficient zein to provide a zein concentration of approximately 30 gm/l. Allow the zein solution to stand for 24 hours and then filter into storage containers. Determine the final zein content of the stock solution by evaporating the solvent from three 10 ml samples. Use the average of the three evaporations to calculate the zein concentration for further use in the AEP 32 or AEP 100 solution preparation and provide additions as determined by solution analysis.

(3) Prepare a stock solution of the cobalt nitrate hexahydrate by dissolving 2 grams in a liter of the 60-40 isopropanol-nitromethane mixture.

(4) Add the 60-40 isopropanol-nitromethane mixture to the tank in a volume approximately 1/2 of the desired final volume and start the agitation.

(5) Calculate the final quantity of cobalt nitrate hexahydrate required and add the stock solution to provide approximately 0.16 gm/l.

(6) Add sufficient 60-40 isopropanol-nitromethane mixture to bring the solution to the desired final operating volume.

(7) Calculate the final concentration of zein required to provide approximately 2.5gm/l and add to the coating tank.

(8) Calculate the metal powders required for the final concentration upper limits and add to the coating tank.

(9) Analyze the freshly prepared solution after applying the coating to a few parts; make additions as indicated by the solution analysis results.

e. Apply AEP Coating as follows:

CAUTION

When close configured cathode to anode distance is required, e.g., multiple anoding for vane, current must be lowered to avoid localized high current density areas. This can result in blistering and/or excessive roughness of the "green" coating deposit.

(1) Coating Solution Precautions:

(a) Water Content — Shall be less than 20 g/L during all coating operations. Isopropanol is hygroscopic and may become contaminated with moisture from exposure to air. Excessive moisture can cause pitting of the "green" coating. Solvent is to be discarded when water is excessive.

(b) Bath Temperature — Shall be maintained between 60-80°F (16-27°C).

(c) Agitation of Solution — Moderate and continuous to provide and maintain a homogeneous dispersion of the suspended particles (dispersants). Baffles in the tank are required to eliminate excessive eddies and/or swirling of the bath which can interfere with the electrophoretic migration of particles creating a wash or thin spots in the coating. Solution agitation should begin approximately one hour prior to use or sampling for analysis. In order to prevent absorption of water from the air, provisions must be made to keep the solution as well covered as possible at all times.

(d) Specific Gravity of Solvent — Solvent is gradually lost from the bath due to evaporation and additions must be made to maintain level. Note that nitromethane is lost more rapidly than isopropanol. When making additions, the specific gravity of the solvent (after separating dispersants) must be checked to maintain proper balance. The specific gravity should be 0.880-0.915.

(2) Immerse masked and/or fixtured parts in the electrophoretic solution and coat using the following parameters:

(a) A DC current density not to exceed 2ma/ CM^2.

(b) A continuous deposition time sufficient to deposit a "green" coating weight of 0.025-0.035 g/CM^2. 1-3 minutes is typical.

NOTE

"Green" coating compositions shall conform to the following:

Aluminum	36-52% by weight
Chromium	30-46% by weight
Manganese	10-26% by weight

(3) For "green" coating composition control, coat scrap parts at frequent intervals, scrape the "green" coating from these parts and submit for chemical analysis.

WARNING

Make sure power is off before handling fixture.

(4) Remove parts from solution, drain off coating solution, and allow to dry for one minute minimum.

(5) Remove masking and/or fixtures in a manner that will avoid damage to the uncured coating.

NOTE

It is necessary to remove any "green" coating from serration prior to diffusion cycle.

(6) Visually inspect masked areas for presence of "green" coat. Such deposits must be removed by mechanical means or by wiping with a 70% isopropyl alcohol-30% water solution.

Table 5. AEP Coating Bath Composition

Dispersing Media	Percent by Weight
Isopropanol (anhydrous)	55-65
Nitromethane	35-45
Soluble Additive	**Grams Per liter**
Zein	1.5-2.5
Cobalt Nitrate Hexahydrate	0.12-0.16
Insoluble Dispersants	**Grams Per Liter**
AL 123 (AEP 32)	15-30
AL 131 (AEP 100)	14-22

38. AEP 32 / AEP 100 - DIFFUSION HEAT TREATING.

Support Equipment Required

Part No./Type Designation	Nomenclature
500X	Magnification
——	Furnace, diffusion (hydrogen or argon bell)
——	Gloves, insulated

NOTE

The applidation of AEP 32 or AEP 100 must be accomplished only by a facility licensed and certified by the OEM or specifically approved by the USN T56-A-427 FST.

a. Diffusion heat treat as follows:

NOTE

Diffusion heat treat the coated parts and a control specimen in a protective atmosphere, such as argon or hydrogen, maintaining an exit dewpoint of -35°F (-37°C) or better. Control specimens of the same material being processed having clean, ground, uncoated surfaces shall be placed in the diffusion furnace with coated parts.

Control specimen must not be in contact with any coated surfaces of the parts. The control specimens shall be metallographically examined at 500X magnification following heat treatment and suitable etching. Intergranular attack or alloy depletion in excess of 0.0002 in. is cause for rejection.

(1) Place parts in basket so that they do not touch one another. Use two thermocouples in each basket, one at the center and the other near one corner.

(2) Load parts into the furnace and process per the diffusion and aging temperatures, soak times and cooling rates required for the particular part and alloy as shown below.

Table 6. Grade or Specification Requirements for AEP 32 or AEP 100 Materials

Material	Grade or Specification Requirement
Dispersing Media	
Isopropanol	99% min. (anhydrous)
Nitromethane	95% min.
Solubles	
Zein (Corn gluten)	Technical Grade (non-edible)
Cobalt Nitrate Hexahydrate	Reagent Grade

CAUTION

Do not exceed 2125°F (1163°C) at any time.

(3) Completely vacuum purge retort with argon gas prior to placement of retort into furnace.

(4) Specific instructions concerning diffusion treatment processes follow.

(a) EMS 73662 Blades (IN 713-C).

WARNING

Heated parts will cause skin damage (burns). Use clean insulated gloves to handle parts.

1. Heat to 1275-1325°F (691-718°C) over a period of one hour minimum and hold at temperature for one hour. During this time, outgassing of the zein binder in the "green" coating occurs. The heating rate must be low to prevent blistering and spalling of the "green" coating. The holding time is to insure complete purging of outgassing products.

2. Diffuse at 2055-2105°F (1124-1152°C). Parts are to remain at this temperature for two hours.

3. Rapidly cool parts in a protective atmosphere to below 800°F (427°C) and cool in air.

(b) EMS 73657 Blades (IN 738).

1. Heat to 1275-1325°F (691-718°C) over a period of one hour minimum and hold at temperature for one hour. During this time outgassing of the zein binder in the "green" coating occurs. The heating rate must be low to prevent blistering and spalling of the "green" coating. The holding time is to insure complete purging of outgassing products.

2. Diffuse at 2025-2075°F (1107-1135°C). Parts are to remain at this temperature for two hours.

3. Rapidly cool parts in a protective atmosphere to below 800°F (427°C) and cool in air.

4. Furnace controlling at 1535-1565°F (835-852°C). Parts are to remain in a protective atmosphere for 24 hours.

5. Rapidly cool parts in a protective atmosphere to below 800°F (427°C) and cool in air.

(c) EMS 73646 (Mar-M246).

1. Heat to 1275-1325°F (691-718°C) over a period of one hour minimum and hold at temperature for one hour. During this time outgassing of the zein binder in the "green" coating occurs. The heating rate must be low to prevent blistering and spalling of the "green" coating. The holding time is to insure complete purging of outgassing products.

2. Diffuse at 1975-2025°F (1079-1107°C). Parts are to remain at this temperature for two hours.

3. Rapidly cool parts in a protective atmosphere to below 800°F (427°C) and cool in air.

4. Furnace controlling at 1535-1565°F (835-852°C). Parts are to remain at temperature in a protective atmosphere for 50 hours.

5. Rapidly cool parts in a protective atmosphere to below 800°F (427°C) and cool in air.

(d) EMS 73667 (IN 792).

1. Heat to 1275-1325°F (691-718°C) over a period of one hour minimum and hold at temperature for one hour. During this time outgassing of the zein binder in the "green" coating occurs. The heating rate must below to prevent blistering and spalling of the "green" coating. The holding time is to insure complete purging of outgassing products.

2. Diffuse at 2025-2075°F (1107-1135°C). Parts are to remain at this temperature for two hours.

3. Rapidly cool parts in a protective atmosphere to below 800°F (427°C) and cool in air.

4. Furnace controlling at 1535-1565°F (835-852°C). Parts are to remain in a protective atmosphere for four hours.

5. Rapidly cool parts in a protective atmosphere to below 800°F (427°C) and cool in air.

6. Furnace controlling at 1385-1415°F (751-768°C). Parts are to remain in a protective atmosphere for 16 hours.

7. Rapidly cool parts in a protective atmosphere to below 800°F (427°C) and cool in air.

b. Dry Hone as follows:

CAUTION

The dry honing operation, when performed by hand, is extremely critical. It requires careful technique and thorough operator instruction for proper execution. Each operator must demonstrate his capability to perform this operation. An absence of more than two weeks from this operation will require a repeat demonstration.

To avoid erroneous heat tint coloration, part cleanliness must be preserved from the dry hone operation through completion of the heat tint inspection. Parts must be protected from contamination by use of clean cloth gloves for handling. Use appropriate covers or containers when parts are waiting between operations.

(1) Dry hone parts, prior to coating inspection, using 240 mesh aluminum oxide grit and 15-25 psig air pressure. Blasting should be discontinued when the surface color changes from dark blue-gray to a light gray, indicating the heat scale from the diffusion heat treatment has been removed. Continued blasting must be avoided since further blasting will remove the coating.

39. AEP 32 /AEP 100 - QUALITY AND INSPECTION PROCEDURES.

Materials Required

Specification No./Part No.	Nomenclature
MIL-T-81533	Trichloroethane, 1,1,1
SAE J827	Shot, steel (size CS 110)
——	Tape, plater's
——	Isopropanol (anhydrous) (CAGE OL407)
——	AL 123 powder (CAGE 4G314)
——	Solvent, Nitromethane (CAGE 2W915)
——	Zein (CAGE 9S696)

NOTE

The applidation of AEP 32 or AEP 100 must be accomplished only by a facility licensed and certified by the OEM or specifically approved by the USN T56-A-427 FST.

a. Segregation of Parts.

(1) Parts shall be maintained as a lot until heat tint inspection after diffusion has indicated acceptable quality of coating and until the representative test specimens that had accompanied the lot through the AEP 32 or AEP 100 process have been metallographically evaluated.

(2) When conformance with requirements has been indicated, parts may be integrated into production flow without continued segregation.

b. The coating when examined visually, shall be adherent to the base alloy, continuous, and shall show no evidence of spalling, chipping, or flaking that exposes unprotected alloy.

CAUTION

To avoid erroneous heat tint coloration part cleanliness must be preserved. Parts must be protected from contamination by use of clean cloth gloves for handling.

The time between heat tinting and inspection after heat tinting is critical and must be as short as possible. Do not exceed four hours.

c. Heat tint to determine coating coverage as follows:

(1) Place parts in the heat tint basket. Spacing of parts shall be sufficient to ensure that all surfaces of the parts come uniformly to temperature.

(2) Place basket and parts in a circulating air furnace.

WARNING

Heated parts will cause skin damage (burns). Use clean insulated gloves when handling parts.

(3) Heat to 1275-1325°F (691-718°C), hold at temperature for 15-25 minutes and cool in air.

NOTE

As the color tint indicating a satisfactory AEP 32 or AEP 100 coating will vary from one facility to another, it is recommended that each processor establish for themselves the color produced by their own processing that indicates adequate AEP 32 or AEP 100 coating.

(4) Adequately coated areas will exhibit a slate gray to light bronze color; a blue-brown to blue tint indicates bare areas.

(5) Airfoil and shroud must have a complete coverage without any bare spots. The coating shall be continuous and adherent showing no evidence of spalling, chipping or flaking to exposed unprotected metal.

(6) Parts that show bare (uncoated) areas, in areas that require coating, must be stripped and recoated.

d. Metallographic Examination.

(1) Representative parts selected at random from production coating lots, or test specimens of the same material proceed with the parts they represent, shall be metallographically inspected on periodic basis as necessary to maintain coating structure per acceptance standards. Preproduction parts or assemblies or engine test qualification parts may be used to establish acceptance standards.

(2) Sectioning and polishing of specimens for metallographic examination of coating shall use procedures which produce minimal heat and physical damage to the coating and base alloy. Suitably polished specimens shall be examined at 500X magnification following immersion etching (0-3 seconds in stainless No. 2 (5 gm. FeC13 + 50 ml HCI-100 ml. Methanol)).

NOTE

Unless otherwise specified by the part or assembly drawing, the total coating thickness on airfoil surfaces shall be 0.001−0.003 in. Other gas path surfaces, such as inner and outer bands, may have a minimum coating thickness of 0.0006 in. Coating of other unspecified surfaces shall not be cause for rejection unless specifically prohibited by part or assembly drawing, provided it does not interfere with the assembly or functioning of the component.

(3) Nondestructive inspection using a thermoelectric probe may be used to inspect for presence of unwanted coating on bare serration surfaces.

NOTE

Any linear indications that resemble crazing, cracking, creasing or furrowing in the AEP 32 or AEP 100 coating are cause for rejection.

e. FPI parts per WP 017 00 when the heat tint inspection has been satisfactorily complied with and when the control specimens and representative parts have complied with the metallographical inspections. No FPI indications are permitted.

Trichloroethane MIL−T−81533 10

f. Vapor degrease parts with MIL−T−81533 1,1,1 Trichloroethane to remove fluorescent penetrant oils.

g. Blade Material Identification.

(1) Determine blade material by referring to the appropriate blade drawing.

(2) Install the blades in the specified shot−peening fixture.

(3) Shot peen the serration area using cast steel shot conforming to SAE−J827, Size CS110. The intensity shall be controlled to produce Almen “A” 8A2 (0.006−0.010 in.) The shot−peening shall be parallel to and perpendicular to the front and rear serration faces.

(4) Determine time to obtain Almen “A” 8A2 intensity and shot peen blades for twice this length of time. Do not exceed forty−five seconds.

(5) Remove blades from fixture and inspect the serration area to ensure that the peened surfaces are of a uniform, fine texture.

(6) Each part that has been subjected to a stripping and recoating cycle must be so identified for each cycle by vibropeening a straight line 0.25−0.38 in. long, not more than 0.002 in. deep, parallel to the center line, on the base of the serrations.

NOTE

Parts shall be maintained as a lot until heat tint inspection after diffusion has indicated acceptable quality of coating and until the representative test specimens that had accompanied the lot through the touch−up process have been metallographically evaluated.

h. Touch−Up Applications (AEP 32) For Nickel Base Alloys—Parts having bare or chipped areas due to minor mechanical damage may be repaired by touch−up.

NOTE

Each specimen that is included in a lot of parts shall be maintained and processed with that lot.

(1) Include a control specimen for laboratory examination. The specimen shall be of the same material as the parts being processed and must be in a ground, dry honed condition. The specimen must be completely free of prior or previous coating and other surface and metallographical contamination.

NOTE

Wear clean cloth gloves whenever blades are to be handled after cleaning. Use appropriate covers or containers when parts are waiting between operations.

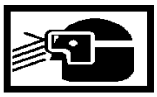

Trichloroethane MIL−T−81533 10

(2) Vapor degrease parts with MIL−T−81533 1,1,1 Trichloroethane. Ensure complete removal of oil, grease or other foreign materials or contaminants.

(3) Mask finished surface areas that are not to be blast cleaned and touched up. Plater's tape, rubber, metal or other suitable mask may be used for masking.

CAUTION

The time between dry honing of parts and application of coating must be as short as possible. In any case do not exceed two hours.

(4) Dry hone areas to be touched up using 240 mesh aluminum oxide grit, a maximum of 40 psi pressure, and a nozzle working distance of 12.00 in. to thoroughly clean affected area.

Compressed Air **57**

(5) After dry honing, thoroughly remove aluminum oxide honing medium from all passages and surfaces using dry compressed air.

(6) Prepare 60/40 solvent by mixing 61.5% (by volume) of isopropanol with 38.5% (by volume) of nitromethane.

(7) Prepare zein solution by dissolving 20 g/L of zein powder into the 60/40 solvent.

(8) Prepare slurry by thoroughly mixing 10 grams of AL 123 powder into 10 ml of zein solution. Keep under mechanical agitation during use. Adjust the amount of zein solution to produce the proper consistency for application. If the slurry becomes too thick due to loss of solvent from evaporation, it may be thinned with the 60/40 solvent.

(9) Apply slurry to the prepared areas using a small, clean artist's brush.

(10) Dry touched up parts at 175−195°F (79−90°C) for a minimum of twenty minutes.

(11) Apply slurry a second time to ensure adequate thickness of the "green" coat.

(12) Dry parts again at 175−195°F (79 − 90°C) for twenty minutes minimum.

(13) Remove masking.

(14) Load touched up parts into a retort so the parts do not touch each other.

(15) Include another control specimen for the laboratory examination. The specimen shall be of the same material as the parts being processed and must have a clean ground uncoated surface.

(16) Each specimen that is included in a lot of parts shall be maintained and processed with the lot.

(17) Heat treat per paragraph 38, this WP. The atmosphere during diffusion and aging shall be protective and the applicable temperatures, soak times and cooling rates required for the particular part and ally shall be complied with.

CAUTION

Avoid excessive blasting. Continued blasting must be avoided as this will remove desirable coating.

(18) After heat treating, dry hone with 240 mesh aluminum oxide grit at 15−25 psi.

Compressed Air **57**

(19) Clean all surfaces and passages with dry compressed air after dry honing.

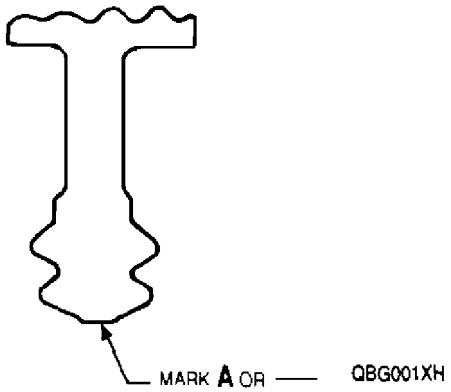

Figure 1. Identification Following AEP 32 Processing

(20) Inspect and clean the interior of the cooling air passages using appropriate inspection lighting and tooling.

(21) The coating must be continuous and adherent, showing no evidence of spalling, chipping, flaking or other imperfections exposing unprotected base metal. Heat tint per step a. to determine coating coverage.

(22) The control specimens included with each lot of parts shall be metallographically examined to determine that the total coating thickness is 0.001-0.003 in. unless otherwise specified and that the following limits are complied with.

(a) Ground, uncoated surfaces must be free from intergranular attack.

(b) Dealloyed structure (alloy depletion) on ground, uncoated surfaces shall not exceed 0.0002 in.

NOTE

Any linear indications that resemble crazing, cracking, creasing or furrowing in the AEP 32 coating are also cause for rejection.

(23) FPI parts per WP 017 00 when the heat tint inspection has been satisfactorily complied with and the respective control specimens have complied with the metallographical inspections. No FPI indications are permitted.

(24) To identify blades processed using the above procedure, vibropeen an “A” on the base of the bottom serration (figure 1).

(25) When conformance with requirements has been indicated, parts may be integrated into production flow without continued segregation.

40. **TURBINE BLADE COATINGS.**

a. Coatings found on turbine blades which may need to be stripped and reapplied are listed in Table 7.

41. **BLACK OXIDE AND BLACK PHOSPHATE PROCESSED STEEL PARTS.**

a. Refer to AMS 2481 for black phosphate processing.

b. Affected steel parts, with black oxide surface protection removed, do not require reprocessing unless otherwise specified.

42. **NICKEL PLATE - GENERAL PURPOSE.**

a. Plate per AMS 2403.

43. **HARD-FACED ELECTROLESS NICKEL PLATING.**

44. HARD FACED ELECTROLESS NICKEL PLATING - SURFACE PREPARATION.

Materials Required

Specification No./Part No.	Nomenclature
MIL-T-81533	Trichloroethane, 1,1,1
O-H-765	Acid, hydrochloric
O-N-350	Acid, nitric, concentrated
P-C-535	Cleaner, alkaline
——	Acid, muriatic
——	Nickel chloride
——	Metex Strip Aid (CAGE 76071)
——	Sodium Cyanide

Table 7. Coating Selection Chart

Description	Part Number	Airfoil Coating	Tip Coating	Shroud Coating
First-Stage blade	23032701	CoCrAlY	LCO-17	
	23074945	CoCrAlY	-	-
	23075070	PtAl	-	
First-Stage vane - Standard	23032721	CoCrAlY		
	23076255	CoCrAlY	-	-
	23073823	CoCrAlY		
	23089438	PtAl		
First-Stage vane - Saddle	23032731	CoCrAlY		
	23076256	CoCrAlY	-	-
	23073824	CoCrAlY		
	23078439	PtAl		
First-Stage vane - Borescope	23032741	CoCrAlY		
	23076257	CoCrAlY	-	-
	23073825	CoCrAlY		
	23078440	PtAl		
Second-Stage blade	23007932	CoCrAlY	-	L-103
Second-Stage vane	23032742	CoCrAlY	-	-
Third-Stage blade	23031193	AEP 32 *	-	L-103
Third-Stage vane	23009143	AEP 32 *	-	-
Fourth-Stage blade	23006474	-	-	L-103
Fourth-Stage vane	23007054	-	-	-

*The application of AEP 32 must be accomplished only by a facility licensed and certified by the OEM or specifically approved by the USN T56-A-427 FST.

Trichloroethane MIL-T-81533 **10**

NOTE

Areas not to be stripped must be protected with an appropriate fixture.

Tank and heating coil must be steel and stripping area must be ventilated.

a. Vapor degrease parts with MIL-T-81533 1,1,1 Trichloroethane.

WARNING

Stripping solution is toxic, use only in well ventilated areas. Do not use on heated surfaces or near open flame. Do not allow contact with skin or eyes. Use rubber gloves and goggles or faceshield for protection.

CAUTION

Do not contaminate nitric acid with water. If necessary, immerse parts in hot water, 160-200°F (71-93°C), for 20-30 seconds and dry with compressed air. Small quantities of water in the nitric acid will cause etching of the base metal. Operate the nitric acid bath at room temperature.

NOTE

O-N-350 concentrated nitric acid is an optional stripping solution.

Nitric Acid O-N-350 **62**

b. Immerse part in the stripping solution listed in table 8 or O-N-350 concentrated nitric acid.

Table 8. Stripping Solution

Metex Strip Aid	8 oz/gal
Sodium Cyanide	12 oz/gal
Water	Remainder
Temperature:	100−130°F (38−54°C)

c. Remove part from stripping solution and rinse in cold water then in hot water.

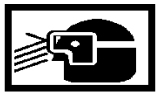

Compressed Air **57**

d. Dry part with compressed air.

e. Remove fixture and apply rust preventative oil.

NOTE

Surfaces of parts to be plated shall be smooth and substantially free from blemishes, pits, tool marks and other irregularities.

Unless otherwise specified, parts having hardness higher than Rockwell C 40, and which have been ground after heat treatment, shall be suitably stress relieved before cleaning for plating. Temperatures to which parts are heated shall be such that maximum stress−relief is obtained without reducing hardness of parts below manufacturing limits.

Trichloroethane MIL−T−81533 **10**

f. Vapor degrease parts with MIL−T−81533 1,1,1 Trichloroethane.

g. Any light oxide scale or discoloration shall be removed by acid pickling in cold hydrochloric acid solution (15−20 percent by weight) followed by thoroughly rinsing in cold running water.

h. Parts requiring preferential plating shall be suitably masked.

i. Clean parts anodically in P−C−535 alkaline cleaner at full current from a six−volt bus bar for at least 45 seconds. Allow cleaning solution to drain well.

j. Rinse parts thoroughly in cold running water for 30−45 seconds.

WARNING

Etching solution is toxic, use only in well ventilated areas. Do not use on heated surfaces or near open flame. Do not allow contact with skin or eyes. Use rubber gloves and goggles or faceshield for protection.

NOTE

Bath shall be purified by low amperage electro−dummying.

k. Cathodically etch in the solution listed in table 9 at six volts for 30−60 seconds:

Table 9. Etching Solution

Muriatic acid (18−20° Baume)	50% by volume
Nickel chloride ($NiCl_2 \cdot 6H_2O$)	0.2−1.0 oz/gal
Anodes	Carbon or nickel

l. Rinse parts thoroughly in cold running water for 30−45 seconds.

WARNING

Nickel strike solution is toxic, use only in well ventilated areas. Do not use on heated surfaces or near open flame. Do not allow contact with skin or eyes. Use rubber gloves and goggles or faceshield for protection.

m. Nickel strike at 20−30 amps/ft^2 for 1−3 minutes in the solution listed in table 10.

Table 10. Nickel Strike Solution

Nickel chloride ($NiCl_2 \cdot 6H_2O$)	30−34 oz/gal
Hydrochloric acid (20° Baume) . . .	10−12 oz/gal
Water	Remainder
Temperature	Room
Anodes	Nickel

n. Rinse parts thoroughly in cold running water for 30−45 seconds.

o. Large parts should be preheated in 200°F (93°C) water for 3−5 minutes.

p. Immerse part for 3 seconds in acid solution shown in table 9.

q. Rinse part in clean running water for 5 seconds. Do not dry.

45. HARD FACED ELECTROLESS NICKEL PLATING − PLATING PROCEDURE.

Support Equipment Required

Part No./Type Designation	Nomenclature
——	Furnace, circulating

Materials Required

Specification No./Part No.	Nomenclature
——	Solution, electroless nickel plating (Ni−Chem)

CAUTION

Baths shall be operated only when provided with adequate ventilation. Tanks for the solution shall be lined with glass, ceramic, rubber, inert plastic or stainless steel.

NOTE

Before placing parts in plating solution, they shall have chemically clean surfaces, prepared with minimum abrasion, erosion and pitting.

a. The temperature of solution shall be controlled within the range of 185−210°F (85−99°C) required to maintain a deposition rate of 0.0006−0.0008 in. per hour.

b. If internal surfaces of small holes and deep recesses require plating, notes on drawing will so specify. The nature of this method of plating is such that, if adequate circulation is maintained, the plating deposited in recesses will be essentially equal to that deposited on external surfaces.

c. Immerse part, while wet from cleaning, in electroless nickel plating solution (Ni−Chem) for sufficient length of time to provide depth of plating required.

d. Plating thickness after finishing shall not exceed 0.005 in. maximum.

Compressed Air **57**

e. Drain excess solution from part. Rinse in cold running water. Unmask, if necessary, and rinse again in cold running water. Rinse in hot water. Dry with compressed air.

WARNING

Heated parts will cause skin damage (burns). Use clean insulated gloves to handle parts.

NOTE

It is permissible to omit step f., if the hardening heat treatment (step g.) is done immediately after plating. Do not harden carburized parts.

f. Immediately after plating, bake plated parts at 365−385°F (185−196°C) for three hours minimum to relieve hydrogen ernbrittlement. Carburized parts shall be heated to 275−300°F (135−149°C) for five hours.

NOTE

Grinding and finishing operations may be performed prior to the hardening process if desired.

g. Harden the nickel plated coating to maximum hardness by heating for one−half hour at 750°F (399°C) in a circulating air furnace followed by an air cool to room temperature.

46. HARD FACED ELECTROLESS NICKEL PLATING − PLATING QUALITY.

Materials Required

Specification No./Part No.	Nomenclature
——	Coolant, filtered

a. Plate shall be firmly bonded to the base metal, and shall be smooth, uniform in appearance, free from frosty areas, pin holes, nodules, blisters, and other defects detrimental to performance of parts.

b. Strip parts rejected for defective plating before replating. Double plating and touch−up after plating is not acceptable.

c. Detrimental effects to the base metal can occur from grinding electroless nickel plate; therefore, the following procedures shall be used when grinding plated surfaces to size:

(1) Continuously flood work piece with filtered coolant during all grinding operations.

(2) Use a freshly dressed grinding wheel at a maximum rate of 6500 surface feet per minute.

(3) The maximum desired feed rate shall not exceed 0.0002 in. per pass for both rough and finish grinds.

47. **CHROME PLATE.**

48. CHROME PLATE − STRIPPING PROCEDURE.

Materials Required

Specification No./Part No.	Nomenclature
EMS 104	Compound, alkaline cleaning

a. Mechanical removal.

(1) Grind as required to remove plate.

b. Electrolytical removal.

(1) Use the stripping solution listed in table 11.

Table 11. Chrome Plate Stripping Solution

Alkaline Cleaning Compound (EMS 104)	8/10 oz. /gal.
Water	Remainder
Temperature	160−180°F (71−82°C)
Make part anodic at approximately	6 volts

c. After plate is removed, rinse part in running water and air dry. Apply corrosion protection if more than 2 hours will elapse prior to repeating or performing other operations.

49. CHROME PLATE − PLATING PROCEDURE.

Support Equipment Required

Part No./Type Designation	Nomenclature
——	Wheel, grinding

Materials Required

Specification No./Part No.	Nomenclature
——	Coolant, filtered

a. Shot peening, prior to plating, shall not be performed.

WARNING

Heated parts will cause skin damage (burns). Use clean insulated gloves to handle parts.

NOTE

Stress relief should occur within four hours after preparation grind and prior to plating.

b. Non−carburized parts shall be stress relieved at 350−400°F (177−204°C) for four hours after preparation grinding.

c. Parts with carburized or hardened surfaces shall be stress relieved at 260−290°F (127−143°C) for five hours after preparation grinding.

d. Chrome plate parts per AMS 2406.

e. Relieve hydrogen embrittlement within four hours after plating as follows:

(1) Non−carburized parts with a hardness less than Rockwell C46 shall be baked at 350−400°F (177−204°C) for four hours.

(2) Parts with carburized or hardened surfaces shall be baked at 260−290°F (127−143°C) for five hours.

(3) Parts with a Rockwell C46 or greater hardness shall be baked at 375°F (191°C) for 23 hours.

f. Detrimental effects to the base metal can occur from grinding chrome plate. Therefore, the following procedures shall be used when grinding plated surfaces to size:

(1) Continuously flood the work piece with filtered coolant during all grinding operations.

(2) Use a freshly dressed wheel at a maximum rate of 6500 surface feet per minute.

(3) The maximum desired feed rate shall not exceed 0.0002 in. per pass for both rough and finish grinds.

50. CHROME PLATE − DOUBLE SHOT PEEN REPAIR.

Materials Required

Specification No./Part No.	Nomenclature
A6−10	Almen Strip
A−A−1042	Shot, cast steel, SAE 110
——	Coolant
——	Gloves, insulated

a. Preparation grind the rework area. Keep metal removal to a minimum.

WARNING

Heated parts will cause skin damage (burns). Use clean insulated gloves to handle parts.

NOTE

Stress relief should occur within four hours after preparation grind and prior to plating.

b. Non−carburized parts shall be stress relieved at 350−400°F (177−204°C) for four hours after preparation grinding.

(1) Parts with carburized or hardened surfaces shall be stress relieved at 260−290°F (127−143°C) for five hours after preparation grinding.

c. Shot peen the surfaces to be plated with SAE 110 cast iron shot. Intensity of the blast shall be equivalent to an A6−10 Almen strip.

d. Chrome plate the rework area per AMS 2406 to a thickness 0.003−0.004 in. greater than the intended finished thickness.

e. Relieve hydrogen embrittlement within four hours after plating as follows:

(1) Non−carburized parts with a hardness less than Rockwell C46 shall be baked at 350−400°F (177−204°C) for four hours.

(2) Parts with carburized or hardened surfaces shall be baked at 260−290°F (127−143°C) for five hours.

(3) Parts with a Rockwell C46 or greater hardness shall be baked at 375°F (191°C) for 23 hours.

f. Mask the rework area and electrolytically remove the chrome plating from the remainder of the part per paragraph 48, this WP.

g. After the plating is removed, rinse part in running water and air dry.

h. Rough grind to within 0.003 in. of the finished dimension as follows:

(1) Continuously flood the work piece with filtered coolant during grinding.

(2) Use a freshly dressed wheel at a maximum rate of 6500 surface feet per minute.

(3) The maximum desired feed rate shall not exceed 0.0002 in. per pass.

i. Stress relieve per step b.

j. Shot peen plated surface per step c.

k. Finish grind to size per step h.

51. **SILVER PLATE − GENERAL PURPOSE.**

a. When original silver plating is no longer an effective protection against galling or seizing of metal parts, strip part and replate per AMS 2411 or 2412, as applicable. Refer to part print for correct specification.

b. Relieve hydrogen embrittlement within four hours after plating as follows:

(1) Non−carburized parts with a hardness less than Rockwell C46 shall be baked at 350−400°F (177−204°C) for four hours.

(2) Parts with carburized or hardened surfaces shall be baked at 260−290°F (127−143°C) for five hours.

(3) Parts with a Rockwell C46 or greater hardness shall be baked at 375°F (191°C) for 23 hours.

c. Finish grind plating to thickness specified on part drawing.

52. **NICKEL−CADMIUM DIFFUSED PLATING.**

Support Equipment Required

Part No./Type Designation	Nomenclature
10X	Magnifier
——	Furnace, circulating air

Materials Required

Specification No./Part No.	Nomenclature
Carbon or Nickel	Anodes
MIL−T−81533	Trichloroethane, 1,1,1
O−N−350	Acid, nitric, concentrated
P−C−535	Cleaner, alkaline
——	Acid, muriatic 18−20° Baume, 50% by volume
O−A−76	Acid, glacial acetic
——	Nickel chloride
——	Solution, demythol gloxine

a. The presence, or lack of, ni−cad plating on a part can be determined as follows:

Nitric Acid O−N−350 **62**

(1) Place a drop of O−N−350 concentrated nitric acid on any questionable surface for 5−10 seconds. Limit test to an area no larger than 1/4−3/8 in. in diameter.

(2) Blot the acid with a clean, absorbent paper.

(3) Place a drop of demythol gloxine solution on the test area. Solution will turn pink if plating is present. Wash area with water.

Trichloroethane MIL−T−81533 **10**

b. Vapor degrease parts in MIL−T−81533 1,1,1 Trichloroethane.

c. Clean parts anodically in P−C−535 alkaline cleaner, at full current from a six−volt bus bar for 45 seconds.

d. Rinse parts thoroughly in cold running water.

NOTE

Bath shall be purified by low amperage electro−dummying.

e. Cathodically etch part in the solution listed in table 12 at six volts for 30−60 seconds.

Table 12. Etching Solution

Muriatic acid (16−200 Baume)	50% by volume
Nickel chloride ($NiCl_2 \cdot 6H_2O$)	0.1−1.0 oz/gal
Anodes	carbon or nickel

f. Rinse part thoroughly by continuous agitation in clean running water for 30 seconds minimum.

g. Examine part for water break to determine if cleaning has been adequate. If water break appears, repeat steps c. through f.

h. If water break persists, part shall be vapor blasted on the surfaces to be plated and then processed per steps c. through f.

i. Nickel strike per paragraph 44, this WP.

j. Rinse part thoroughly by continuous agitation in clear running water for 30 seconds minimum.

WARNING

Heated parts will cause skin damage (burns). Use clean insulated gloves to handle parts.

k. Large parts shall be preheated in 200°F (93°C) water for 3−5 minutes.

l. Immerse part for approximately 3 seconds in acid solution shown in table 12.

m. Rinse part in clean running water for 5 seconds.

NOTE

The thickness of the nickel shall be 0.00005 in. minimum on surfaces upon which a controlled deposit cannot be maintained, such as holes, grooves or recesses.

n. Electroless nickel plate per AMS 2404 to a thickness of 0.0002−0.0004 in.

o. Rinse the part thoroughly in cold running water.

p. The nickel plate must be firmly and continuously bonded to the base metal, shall be smooth, uniform in appearance, free from frosty areas, pin holes, nodules, and blisters.

q. Cadmium plate the part immediately per AMS 2400 to a thickness of 0.0001−0.0002 in.

r. Rinse the part thoroughly in cold running water.

s. Treat the part by an approved chromate process to prevent fingerprinting and staining.

t. Rinse the part thoroughly in cold running water and then in hot water.

Compressed Air **57**

u. Air dry. (Clean compressed air may be used to facilitate drying.)

v. The thickness of the plate shall be uniform.

w. The cadmium plate must be firmly and continuously bonded to the nickel plate, shall be smooth, uniform in appearance, not coarsely crystalline, and free from pin holes, porosity, blisters, nodules, pits and other harmful defects.

NOTE

The diffusion heat treatment shall be started within 30 minutes after the final plating operation.

x. Heat the part to 620−640°F (327−338°C) in a circulating air furnace and hold at temperature for 30 minutes.

y. Cool to 120°F (49°C) minimum. Immediately clean the part by immersion for 5−15 seconds in an aqueous solution containing 5% glacial acetic acid (by volume) to produce a matte grey surface. Rinse in cold water, then hot water, and dry with compressed air.

z. The finished plate, after diffusion and cleaning, shall have a dull matte finish, grey to black in color, shall be free from balling when examined under magnification up to 10X and shall be smooth to the touch.

aa. The total plating thickness of the finished part shall be 0.0003−0.0006 in., except as stated in the note above step n.

53. **METAL SPRAY COATING.**

Support Equipment Required

Part No./Type Designation	Nomenclature
——	Metallizing machine (CAGE 39918)
——	Metco guns 4E, 8E, or 10E (CAGE 39918)

Materials Required

Specification No./Part No.	Nomenclature
AMS 3135 (DC 1−2531 or GE SR−6426)	Sealer, resin
MIL−T−81533	Trichloroethane, 1,1,1
O−M−232	Methyl alcohol
Sprabronze AA	Coating alloy
——	Green stop−off (CAGE 63585)
——	Grit, aluminum oxide (No. 12−36) (CAGE 39918)
——	Metcolite C (CAGE 39918)

a. Surfaces to be coated shall be machined to the dimensions specified in the applicable work package.

Trichloroethane MIL−T−81533 10

b. Thoroughly vapor degrease parts in MIL−T−81533 1,1,1 Trichloroethane as follows:

(1) Handle parts or assemblies individually or in groups by the use of racks or baskets, whichever is most convenient. Position parts in racks or baskets to facilitate drainage of solvent from recesses.

(2) Lower the parts completely within the vapor zone of the degreaser and allow to remain until the solvent ceases to condense on the part.

(3) Spray with solvent for thorough cleaning of the parts. This operation must always be carried out below the level of the condensing coils.

(4) Drain as much solvent as possible from the part before removing from the vapor zone.

(5) Remove part slowly from the vapor zone permitting complete condensation of vapors and maximum drainage of solvent.

Methyl Alcohol O−M−232 58

(6) When required, wipe parts with O−M−232 methyl alcohol, to remove seepage of lubricants from recessed areas.

c. Mask part as necessary for metallizing the machined surfaces. Observe the following recommendations when masking part.

(1) Masks should be steel, brass, or any other material resistant to the metallizing flame spray.

(2) Masks should be designed to prevent bridging over and adherence of the sprayed coating to the mask.

(3) Edges of masks should be chamfered or tapered to minimize flash buildup at the edge of the masked area.

CAUTION

Use care to prevent any contamination of prepared surfaces by contact with the hands or other means.

NOTE

Parts must be spray coated as soon as possible (less than two hours) after grit blasting. If spray coating is not completed within two hours after grit blasting, the parts shall be reprocessed by vapor degreasing and grit blasting.

d. Grit blast the area of the masked part to be metallized as follows:

(1) The Metcolite C aluminum oxide grit must be sharp and clean, with a 12−36 mesh size.

(2) Back−up fixtures must be used when necessary to retain part dimensions during grit blasting.

(3) The grit blast air pressure must be maintained within a range of 50−100 psi. Blast part as necessary to produce a uniform dull matte finish.

Compressed Air 57

(4) Remove all loose grit particles from the part with clean, dry, compressed air.

e. Paint masks with Green Stop−off to minimize adherence of the spray coating. The paint must not contact the prepared surfaces to be coated.

WARNING

Heated parts will cause skin damage (burns). Use clean insulated gloves to handle parts.

f. Preheat the cleaned and masked parts to a temperature of 175−200°F (79−93°C)

g. Apply the bonding medium using Metco type 4E, 8E, or 10E guns or a Type K metallizing machine to a thickness of 0.002−0.007 in.

h. The spray stream shall be held as nearly perpendicular to the part as possible but in no case shall the angle of impingement be less than 45°.

NOTE

The air blast must be continued throughout the spraying operation.

i. As soon as spraying of the bonding medium is started, a clean, filtered air blast shall be directed on the opposite side of the part as necessary to maintain a part temperature between 150−200°F (66−93°C).

j. Apply the Sprabronze AA coating alloy over the bonding medium using the metallizing gun and operating settings specified. Thickness of the coating must be sufficient to permit finish machining.

k. Remove masks in a manner that will avoid damage to the metallized coating.

l. Apply a resin sealer prior to and after final machining as follows:

(1) Apply AMS 3135 resin sealer (DC 1−2531 or GE SR−6426) to the bronze coating by brush, spray, or roller in multiple coats.

(2) Allow sufficient time between coats for the sealer to be absorbed.

(3) Remove sealer from areas that have not been metallized.

NOTE

Magnesium components coated with Sprabronze AA must be baked at 300°F (149°C) for 3.5 hours and air cooled.

(4) Air dry the resin sealer for one hour, bake at either 425°F (218°C) for 45 minutes or 400°F (204°C) for one hour and air cool.

m. Finish machining must be performed in such a manner as to eliminate propagation of cracks into the sprayed coating from the overspray deposit. When establishing surfaces and bores, all dimensions must meet manufacturing limits. Flanges cannot be machined below manufacturing limits without adversely affecting the internal stacking of parts within the gearbox.

n. The metal spray coating must be adherent to the base metal and have a uniform surface free from blisters, chips, cracks, or other objectionable imperfections.

DEPOT MAINTENANCE

SUPPORT EQUIPMENT MAINTENANCE

Reference Material

Torque Tools − Use, Care and Testing Instructions . . . . . NAVAIR 17−1−108
Lifting Slings and Restraining Devices . . . . . NAVAIR 17−1−114

None

Alphabetical Index

Subject **Page No.**

Introduction 2
Preparation of Support Equipment for Shipment or Storage 3
Support Equipment Covered by Separate Publications 2
Support Equipment Inspection and Testing 2
Support Equipment Preventive Maintenance 2
Care of Tools 2
Lifting Slings and Restraining Devices − Inspection and Proofload Testing 3
Torque Tools − Use, Care and Testing Instructions 3

Record of Applicable Technical Directives

None

1. **INTRODUCTION.**

2. This work package (WP) provides the general maintenance instructions for support equipment applicable to the T56−A−427 turboprop engine. Maintenance instructions for support equipment covered by separate publications are not included in this WP.

3. **SUPPORT EQUIPMENT COVERED BY SEPARATE PUBLICATIONS.**

4. Table 1 lists the part numbers, publication titles, and publication numbers of support equipment covered by separate publications.

5. **SUPPORT EQUIPMENT INSPECTION AND TESTING.**

6. Inspect and test support equipment as follows:

a. Inspect support equipment on a periodic basis or whenever suspected of faulty operation.

b. Test and troubleshoot support equipment using applicable manual. Refer to table 1.

7. **SUPPORT EQUIPMENT PREVENTIVE MAINTENANCE.**

8. CARE OF TOOLS.

Materials Required

Specification No./Part No.	Nomenclature
MIL−PRF−23699	Oil, lubricating
MIL−PRF−680, Type II	Solvent, dry cleaning

Dry Cleaning Solvent
MIL−PRF−680, Type II **3**

a. Keep functional surfaces (mates with engine surfaces) and threaded features (clamp screws, adjustment screws, etc.) clean and free of foreign material. Clean with MIL−PRF−680, Type II dry cleaning solvent.

Table 1. Support Equipment Covered by Separate Publications

Part No.	Publication Title	Pub. No.
23002970	Operating and Service Instructions with Parts List − Torquemeter Runout Test Set	GTP5338
6796646	Operation and Maintenance Instructions−Compressor Case Metallizing Machine	4X2
6796797	Electronic Rotating Static Balancing Machine Cantilever Suspension Type STA (Preliminary Instruction Manual)	29
6798026	Operation and Service Instructions − Fuel Pump Test Stand Model No. 83159	37X2
6799094	Operation and Service Instructions − Speed Decreaser Test Stand	
6799152	Operation and Maintenance Instructions − Speed Sensitive Control and Speed Sensitive Valve Test Stand	55X2
6893547	Operation and Service Instructions − Test Coordinator Control Stand	GTP5215
6799866	Operation and Service Instructions − Fuel Accessories Test Stand	45X2
7057	Instructions and Parts Breakdown − Lube and Scavenge Pump Test Stand	A−23800

b. Keep functional surfaces and threaded features free from corrosion, nicks, dents or burrs. Remove high metal and clean−up corrosion using standard shop practices.

Lubricating Oil, MIL−PRF−23699 2

c. Lubricate functional surfaces and threaded features with MIL−PRF−23699 lubricating oil.

d. Keep attaching parts (screws, bolts, nuts) tight. Tighten when required.

e. Make sure all exposed electrical connections and contacts are clean and tight. Clean and tighten when required.

f. Cover all electrical connections, when not in use, with protective plastic caps.

g. Position electrical wiring and cables so they will not be subjected to strain, sharp bends, or kinks. This applies to in−use and storage.

9. LIFTING SLINGS AND RESTRAINING DEVICES − INSPECTION AND PROOFLOAD TESTING.

a. Refer to NAVAIR 17−1−114.

10. TORQUE TOOLS − USE, CARE AND TESTING INSTRUCTIONS.

a. Refer to NAVAIR 17−1−108.

11. **PREPARATION OF SUPPORT EQUIPMENT FOR SHIPMENT OR STORAGE.**

Materials Required

Specification No./Part No.	Nomenclature
MIL−B−121, Grade A, Type II	Barrier material, grease proofed, waterproofed, flexible
MIL−D−3464 Class I	Desiccant, 16−unit bag (AR)
MIL−PRF−23699	Oil, lubricating
MIL−PRF−680, Type II	Solvent, dry cleaning
PPP−T−60	Tape, adhesive, pressure sensitive

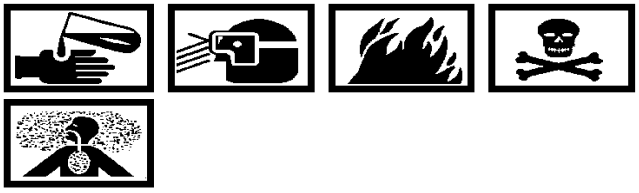

Dry Cleaning Solvent MIL−PRF−680, Type II 3

a. Clean item with MIL−PRF−680, Type II dry cleaning solvent. Allow to air dry.

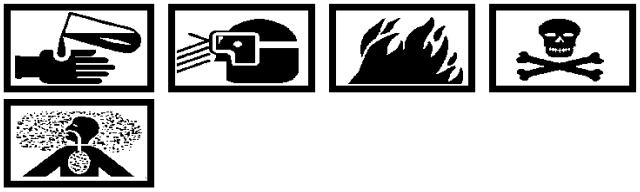

Lubricating Oil, MIL−PRF−23699 2

b. Apply coating of MIL−PRF−23699 lubricating oil to functional surfaces and exposed threads.

c. If applicable, wrap item or item details with MIL−B−121 Grade A, Type II barrier material and secure using PPP−T−60 tape.

d. Package item in suitable shipping container with at least one 16−unit bag of MIL−D−3464, Class I desiccant. Seal container with PPP−T−60 tape.

DEPOT MAINTENANCE

ENGINE

PREPARATION FOR TEST

Reference Material

Maintenance . . . . . NAVAIR 02B−5DG−6−1
Engine Test − Preparation . . . . . WP 022 00
Reduction Gear Unit with Safety Coupling and Torquemeter Assembly − Removal and Installation . . . . . WP 027 00

Alphabetical Index

Subject **Page No.**

Introduction 3
Preparation for Test 5
Engine Assembly Installation on Test Dolly 6
Engine Drain Connections 9
Engine Linkage Installation 8
Engine Speed and Torquemeter Output Instrumentation Connections 9
Mounting Test Dolly and Engine Assembly on Test Dolly Support 8
Pressure and Temperature Test Point Fittings and Adapters 6
Pressure Test Point Fittings and Adapters Installation 6
Temperature Test Point Adapters Installation 6
Pressure Sensing Connections 9
Prestart Checks and Adjustments 8
Service Connections 9
Slave Starter and Tachometer Generators Installation 5
Temperature Measuring Instrumentation Connections 9
Vibration Transducers (Pickups) Installation 6

Alphabetical Index (contd)

Subject **Page No.**

Test Cell Electrical Power and Instrumentation Configuration Requirements 3
Pressure (Fluid and Air) Test Point Locations 4
Temperature (Fluid and Air) Test Point Locations 5
Test Cell Electrical Power Requirements 3
Alternating Current (AC) Power Requirements 3
Direct Current (DC) Power Requirements 3
Test Cell Instrumentation Requirements 3

Record of Applicable Technical Directives

None

1. **INTRODUCTION.**

2. This work package (WP) contains the test cell configuration requirements and provides the instructions for preparing the T56−A−427 turboprop engine for test. The following major functions are included:

- Test Cell electrical power and instrumentation requirements.
- Installation of engine assembly into test dolly.
- Installation of engine and test dolly into test dolly support.
- Installation of support equipment on engine.
- Connections of electrical cables, fluid lines, and drain lines.

3. **TEST CELL ELECTRICAL POWER AND INSTRUMENTATION CONFIGURATION REQUIRE−MENTS.**

4. TEST CELL ELECTRICAL POWER REQUIRE−MENTS. The following sub−paragraphs provide the electrical power requirements for each pair of test cells.

5. Direct Current (DC) Power Requirements. Provide DC power source having a rectifier rated at 100 amperes continuous service.

6. Alternating Current (AC) Power Requirements. Provide AC power supply rated at 102−124 volts and 380−420 Hertz.

7. TEST CELL INSTRUMENTATION REQUIRE−MENTS. The test cell shall be equipped with pressure, temperature, engine speed (power section and reduction gear), and torquemeter output instrumentation. Refer to table 1 for pressure instrumentation, table 2 for temperature instrumentation, and table 3 for engine speed and torquemeter output instrumentation.

Table 1. Pressure Instrumentation Requirements

Reading	Instrumentation
Fuel Control Discharge	0−600 psig gage
Fuel Pump Inlet	0−100 psig gage
Power Section Oil	0−100 psig gage
Power Section Oil−In	Minus 30 in. Hg to 30 psig gage
Reduction Gear Oil	0−300 psig gage
Scavenge Oil	0−100 psig gage
Reduction Gear Oil−In	Minus 30 in. Hg to 30 psig gage
Starter Air	0−10 psig gage
Anti−icing Air Valve Air	0−60 psig gage (2)
Compressor Inlet	26−36 in. Hg tape−type water manometer
Test Cell Reference Air	26−36 in. Hg tape−type water manometer
Diffuser Sump Air	0−30 in. Hg manometer

Table 2. Temperature Instrumentation (Potentiometers) Requirements

Reading	Potentiometer Range
Starter Air Supply Inlet	Minus 75−575° F (Minus 60−302°C)
Turbine (average)	0−2400° F (Minus 18− 316°C)
Compressor Inlet	Minus 75−575° F (Minus 60−302°C)
Power Section Oil−Out	Minus 75−575° F (Minus 60−302°C)
Power Section Oil−In	Minus 75−575° F (Minus 60−302°C)
Reduction Gear Oil−Out	Minus 75−575° F (Minus 60−302°C)
Reduction Gear Oil−In	Minus 75−575° F (Minus 60−302°C)

Table 3. Engine Speed and Torquemeter Output Instrumentation Requirement

Reading	Instrumentation
Reduction Gear and Power Section RPM	Indicator adapted to reduction gear and power section tachometer generators. Power section ratio 0.2957:1 and reduction gear ratio 0.2957:1. Accurate within ±50 rpm.
Torquemeter Output	Unitized torquemeter indicator reading in.−lbs or horsepower.

8. PRESSURE (FLUID AND AIR) TEST POINT LOCATIONS. The fluid and air pressures shall be taken at the following test point locations:

a. Fuel Control Discharge Pressure. Taken at pressure tap on fuel control adjacent to fuel outlet.

b. Fuel Inlet Pressure. Taken at fuel pump inlet.

c. Power Section Oil Pressure. Taken at pressure tap on front of accessory drive housing.

d. Power Section Oil−In Pressure. Taken at oil inlet.

e. Reduction Gear Oil Pressure. Taken from rearmost upper boss located above filter assembly on rear housing.

f. Scavenge Oil Pressure. Taken from scavenge outlet connection.

g. Reduction Gear Oil−In Pressure. Taken at oil inlet.

h. Starter Air Pressure. Taken from total pressure probe located within three feet of starter air inlet.

i. Anti−icing Air Valve Air Pressure. Obtain pressure for check purposes from test cell slave fittings on plugs located at 3 and 9 o'clock positions on power section compressor air inlet housing.

NOTE

The probes are located as determined from a survey. The probe locations will not necessarily be symmetrical.

j. Compressor Inlet Pressure (average). Taken from three 6796366 compressor inlet air pressure probes installed approximately 120° apart and approximately 2 in. ahead of compressor inlet.

NOTE

The exact location of this probe is determined by a pressure survey.

k. Test Stand Reference Pressure. Taken from static pressure probe located in the test stand near horizontal center line of engine, and on right side, 1−2 in. outside nozzle.

l. Diffuser Sump Pressure. Taken at a pressure tap on diffuser at about the 11 o'clock position.

9. TEMPERATURE (FLUID AND AIR) TEST POINT LOCATIONS.

a. Starter Air Supply Inlet Temperature. Taken from one iron−constantan thermocouple inserted in air supply line within three feet of starter.

b. Turbine Measured Temperature. Taken from average of fourteen engine−furnished thermocouples located in the third−stage turbine vanes.

c. Compressor Inlet Temperature. Taken from average of three 6795794 stagnation type iron−constantan thermocouple probes located 120° apart and 5 in. forward of compressor air inlet housing.

d. Power Section Oil−Out Temperature. Taken from one closed tip type iron−constantan thermocouple inserted in scavenge oil line within four feet of oil outlet pad.

e. Oil−in Temperature. Taken from one closed tip type iron−constantan thermocouple inserted in oil inlet lines within four feet of reduction gear and power section oil inlet pads.

f. Reduction Gear Oil−Out Temperature. Taken from one closed tip type iron−constantan thermocouple inserted in scavenge oil line within four feet of oil outlet pad.

10. **PREPARATION FOR TEST.**

11. All engine openings shall be kept covered or protected from foreign objects and possible damage while engine is being prepared for test.

12. SLAVE STARTER AND TACHOMETER GENERATOR INSTALLATION.

Support Equipment Required

Part No./Type Designation	Nomenclature
Model ATS 100−40	Starter (Airesearch)
——	Generator, tachometer (2)
——	Wrench, torque (0−400 lb in.)

Materials Required

Specification No./Part No.	Nomenclature
MS21043−4	Nut, self−locking (0.250−28) (8)
MS9134−01	Gasket, tachometer generator (2)
MS9136−01	Gasket, starter (1)
MS9320−10	Washer (8)
MS9320−12	Washer (6)
6856612	Nut, self−locking (0.375−24) (6)

a. Install starter on reduction gear rear housing as follows:

(1) Install gasket and starter on mounting pad.

(2) Install washers and nuts. Torque nuts 265−300 lb in. (QA)

b. Install tachometer generators on mounting pads of reduction gear rear housing and accessory drive housing cover as follows:

(1) Install gasket and generator on pad.

(2) Install washers and nuts. Torque nuts 74−79 lb in. (QA)

13. VIBRATION TRANSDUCERS (PICKUPS) − INSTALLATION.

Support Equipment Required

Part No./Type Designation	Nomenclature
1−117	Meter, Vibration with 16 Hz and 150 Hz filters
23051228	Adapter, compressor horizontal vibration pickup mounting
4−106−0001	Transducer (Pickup), vertical vibration
4−106−0002	Transducer (Pickup), horizontal vibration (2)
6796727	Adapter, mounting vertical vibration pickup (use with 6799238)
6797910	Adapter, mounting, reduction gear vibration pickup
6799238	Isolator, heat, vibration pickup (use with 6796727)

a. Install 23051228 horizontal vibration pickup mounting adapter on compressor housing−to−air inlet housing splitline at the 9 o'clock position. Install vibration pickup 4−106−0002 on adapter.

b. Install 6799238 vibration pickup heat isolator and 6796727 vertical vibration pickup mounting adapter at the 12 o'clock position on turbine rear bearing support. Install vibration pickup 4−106−0001 on adapter.

c. Install 6796910 reduction gear vibration pickup mounting adapter on reduction gear at 9 o'clock position on tower left accessory pad. Install vibration pickup 4−106−0002 on adapter.

14. PRESSURE AND TEMPERATURE TEST POINT FITTINGS AND ADAPTERS.

15. Pressure Test Point Fittings and Adapters−Installation. Install necessary fittings and adapters required to make pressure connection to test cell instrumentation. Refer to paragraph 8, this WP for test point locations. Provide connection for the following pressures:

- Fuel control discharge
- Fuel inlet
- Power section oil
- Power section oil−in
- Reduction gear oil
- Scavenge oil
- Reduction gear oil−in
- Starter air
- Anti−icing air valve air
- Compressor inlet
- Test stand reference
- Diffuser sump

16. Temperature Test Point Adapters − Installation. Install necessary adapters required to make temperature connections to test cell temperature instrumentation. Refer to paragraph 9, this WP for test point locations. Provide connection for the following temperatures:

- Starter air supply inlet
- Turbine inlet
- Compressor inlet
- Power section oil−out
- Oil−in (power section and reduction gear)
- Reduction gear oil−out

17. ENGINE ASSEMBLY INSTALLATION ON TEST DOLLY.

Support Equipment Required

Part No./Type Designation	Nomenclature
23033008	Shroud, turbine section
6795794	Probe, compressor inlet air temperature (3)
6795798	Adapter, attaching diffuser to 6796870 mounting adapter
6796246	Screen, test, air inlet (2)
6796303	Cover, compressor air inlet housing and test screen (locally fabricate)

Support Equipment Required (contd)

Part No./Type Designation	Nomenclature
6796366	Probe, compressor inlet air pressure (3)
6796784	Stand, engine overhaul
6796859	Adapter, engine attaching
6796869	Adapter, trunnion air inlet housing mounting pad to 6796784 stand
6796870	Adapter, mounting diffuser mounting bracket on 6796784 stand
6797241	Duct, air inlet, engine test
6797692	Adapter, lifting
——	Wrench, torque (0−400 lb in.)

Materials Required

Specification No./Part No.	Nomenclature
AN121579	Nut, castle (0.375 − 24) (1
AN178CH11A	Bolts (0.375− 24) (12)
AN381−3−10	Pin, Cotter (1)
MS20995C32	Lockwire

a. Install 6796859 engine assembly attaching adapter to 6797692 lifting adapter and position lift on engine assembly. Refer to NAVAIR 02B−5DG−6−1, WP 027 00.

CAUTION

Use care to prevent the engine from swinging in order to reduce the possibility of damage.

b. Remove engine assembly from 6796784 overhaul stand. Also remove 6795798, 6796869, and 6796870 adapters at diffuser and air inlet housing.

c. Install two reduction gear trunnion mounts, using six 0.375−24 bolts (each). Torque bolts 265−300 lb in. and lockwire. (QA)

d. Remove trunnion locating bolts and washers from reduction gear trunnion mounts.

e. Install two dolly−to−diffuser bracket mount support adapters (approximately 35 in. high) on rear pads of dolly.

f. Install two reduction gear trunnion mounts on front pads of dolly.

g. Feed engine assembly into mounts from rear side until reduction gear trunnions are in their approximate final locations in mounts. Insert washers to assist final alignment.

h. Insert one trunnion locating bolt, but do not tighten nut; “snake” the engine assembly until the second trunnion locating bolt can be inserted. Tighten nuts on locating bolts, as required, and insert cotter pins.

i. Attach engine assembly to test dolly at diffuser mount on bottom of engine, using mounting bracket bolt, a 0.375−24 in. thread castle nut. Torque nut 240−280 lb in. and secure with cotter pin. (QA). (Be sure linkage hinges freely to accommodate thermal growth.)

j. Attach engine digital electronic trim control to bracket on left rail (looking forward) of dolly.

k. Install 6796246 air inlet test screens on compressor air inlet of power section. When engine is transported or stored, install 6796303 air inlet housing and test screen cover.

NOTE

6797241 engine test air inlet duct is not required if engine testing is being accomplished in the Quick Engine Change Unit (QEC).

l. Install 6797241 air inlet duct over torquemeter shaft. Bolt duct halves together with detail hex head bolts and nuts. Attach duct to compressor air inlet housing using detail Marmon clamp.

m. Install three 6796366 compressor inlet air pressure and three 6795794 air temperature probes in air inlet duct.

n. Install 23033008 turbine case shroud on turbine unit. Make sure shroud is not resting on thermocouple leads.

18. MOUNTING TEST DOLLY AND ENGINE ASSEMBLY ON TEST DOLLY SUPPORT.

Support Equipment Required (contd)

Part No./Type Designation	Nomenclature
6797744	Adapter, lifting, engine test dolly
6797950	Protector, propeller, shaft retaining thread
——	Wrench, torque (0−300 lb in.)

a. Attach 6797744 lifting adapter to test dolly.

b. Loosen retaining nuts and swing four dolly hinged attaching clamps to opened position.

c. Lift test dolly and engine assembly onto engine test dolly support, placing two dolly cross bars in opened hinged clamp seats. The dolly, when placed in position, is positively located by a ball and socket.

d. Close four hinged attaching clamps, and tighten as required.

e. Install 6797950 propeller shaft thread protector and slave propeller.

f. Install the 13 foot 10 in. (small diameter) reducing orifice adapter onto test stand orifice and reducer assembly, using 20 (0.250−20 x 4 1/4 in. length) hex head cap screws with washers, lockwashers, and nuts. Torque nuts 60−65 lb in. (QA).

g. Roll stand orifice and reducer assembly into position.

h. Install augmenter and exhaust extension tube assembly front cover with engine adapter hole in upper position.

19. ENGINE LINKAGE − INSTALLATION.

Support Equipment Required (contd)

Part No./Type Designation	Nomenclature
——	Wrench, torque (0−300 lb in.)

Materials Required

Specification No./Part No.	Nomenclature
——	Screw, (10−32) hex head (1)
——	Screw, (0.250−28) hex head (2)
——	Nut, self−locking (10−32) (1)
——	Nut, self−locking (0.250−28) (2)

a. Attach power lever control auxiliary linkage (approximately 19 in. long) to outboard side of coordinator. Retain with 0.250−28 screw and self−locking nut. Torque nut 74−79 lb in. (QA).

NOTE

Install linkage on coordinator with coordinator indicator and linkage at Adel unit at mid−travel.

b. Attach emergency control input lever adapter to inboard side of coordinator. Retain with 10−32 screw and self−locking nut. Torque nut 37−42 lb in. (QA).

NOTE

Install linkage with coordinator emergency control input lever and stand Adel unit at mid−travel.

c. Attach emergency control input lever control auxiliary linkage (approximately 19 in. long) to emergency control input lever adapter. Retain with 0.250−28 screw and self−locking nut. Torque nut 74−79 lb in. (QA).

d. Attach propeller control linkage and check rigging. Refer to NAVAIR 02B−5DG−6−1, WP 027 00.

20. PRESTART CHECKS AND ADJUSTMENTS. Perform prestart checks and adjustments before connecting fuel supply to power unit. Refer to NAVAIR 02B−5DG−6−1, WP 022 00.

21. SERVICE CONNECTIONS. Make following service connections to reduction gear and power section:

a. Fuel supply to power unit inlet after completing prestart checks and adjustments. Refer to paragraph 20, this WP.

b. Oil supply to reduction gear inlet.

c. Oil return from reduction gear outlet.

d. Oil supply to power unit inlet.

e. Oil return from power unit outlet.

f. Starter air supply to starter.

22. ENGINE DRAIN CONNECTIONS.

WARNING

These lines shall be installed in such a manner that they will discharge fuel at sufficient distance from engine to eliminate possible fire hazard. The lines shall be located so as to be readily observed by test personnel.

a. Fuel Control. Connect drain line to fitting on fuel control just rear of mounting flange.

b. Burner Drain. Connect drain lines to fittings at front and rear end of combustion chamber.

c. Manifold Drain Valve. Connect drain line to fitting at drain valve.

d. Fuel Pump. Connect drain line to fitting on mounting flange.

e. Temperature Datum Control Valve. Connect drain line to fitting on valve body. This drain shall be kept independent of other drain lines or receptacles.

f. Fuel Control Bellows Chamber Drain. Connect drain line to fitting provided at lower port on rear left edge of bellows chamber.

23. PRESSURE SENSING CONNECTIONS. Make following pressure sensing connections:

a. Power section fuel manifold pressure.

b. Fuel pump discharge pressure.

c. Fuel inlet pressure.

d. Oil inlet pressure.

e. Scavenge oil pressure.

f. Power section oil pressure.

g. Reduction gear oil pressure.

h. Compressor air inlet pressure.

i. Test cell reference pressure.

j. Starter air supply pressure.

k. Engine anti−icing air pressure (two gages required).

l. Diffuser sump pressure.

24. TEMPERATURE MEASURING INSTRU−MENTATION CONNECTIONS. Make following temperature probe connections:

a. Compressor inlet temperature.

b. Turbine measured temperature.

c. Power section oil−out temperature.

d. Reduction gear oil−out temperature.

e. Reduction gear and power section oil inlet temperature.

f. Starter air supply inlet temperature.

25. ENGINE SPEED AND TORQUEMETER OUTPUT INSTRUMENTATION CONNECTIONS. Make following indicator connections.

a. Engine speed (reduction gear and power unit).

b. Torquemeter output.

DEPOT MAINTENANCE

ENGINE TEST

Reference Material

Preparation for Engine Test . . . . . WP 020 00
Reduction Gear Assembly−Test . . . . . WP 022 00
Maintenance . . . . . NAVAIR 02B−5DG−6−1
Preparation for Service and Storage . . . . . WP 019 00
Engine Test . . . . . WP 023 00

Alphabetical Index

Subject **Page No.**

Engine Functional Run Before Engine Test 10
Anti−Icing Air Valve Operation Check 14
Compressor and Turbine Seal Break−In 11
Compressor and Turbine Seal Break−In Schedule 11
Digital Electronic Trim Control Check 14
Digital Electronic Trim Control Torque Calibration 12
Electrical Engine Shutdown and Negative Torque System (NTS) Check 16
Engine Fuel and Oil Leakage Check 16
Final Control Check 16
Fuel Control Governor Check 14
Hydromechanical Fuel Schedule Check 13
Mechanical Fuel Shut−Off 14
On−Board Engine Transducer Check 13
Prestarting Adjustments and Checks 10
Propeller Brake System Check 14
Reverse Thrust Operation Check 16
Starting Procedure 10
Thrust Sensitive Signal (TSS) System Check 16
Torquemeter Setting 12

Alphabetical Index (contd)

Subject **Page No.**

Transient Vibration Check 16
Engine Inspection After Test 33
Compressor Rotor Blade−to−Compressor Case Rub 33
Leakage Checks 33
Visual Inspections 33
Engine Performance Evaluation 24
Data Correction Method 24
Compensated Turbine Measured Temperature 30
Determination of Acceptable Engine 30
Determination of Percent Variance from Specification Values 30
Fuel Flow 24
Horsepower 24
Plotting Horsepower and Fuel Flow 30
Specific Fuel Consumption Correction 30
General 24
Performance Limits 24
Engine Fuel System Preservation and Removal from Test Cell 33
Engine Starting and Engine Shutdown Procedures 4
Engine Test 16
Acceptance Test Run Schedule 16
Penalty Run Schedules 20
Test Data to be Recorded 18
Engine Test Requirements 4
Compensated Turbine Measured Temperature 8
Diffuser Sump Pressure 9
Fuel and Oil Leakage Limits 4
Fuel Specification 4
Fuel System Operating Parameters 4
Fuel Inlet Pressure 4
Fuel Pressure Fluctuation 4
Maximum and Minimum Fuel Flow Limits 4
Governor Speed 9
Maximum Shaft Horsepower 9
Oil Specification 4
Oil System Operating Parameters 6
Oil Boost Pressure 6
Oil Consumption 6
Oil Flow 6
Oil Inlet Pressure 6
Oil Inlet Temperature 6
Oil Pressure 6
Oil Pressure Fluctuation 6
Oil Vapor 7
Scavenge Oil Pressure 6

Alphabetical Index (contd)

Subject **Page No.**

Power Transients 9
Safety Coupling 9
Speed Control 9
Turbine Flange Air Leakage 9
Vibration (Engine Monitoring System) 7
Vibration (Support Equipment System) 7
Introduction 4
Test Cell Operating Precautions 4

Record of Applicable Technical Directives

Type/No.	Date	Title and ECP No.	Date Inc.	Remarks
IPPC 110	—	Engine Fuel Enrichment System - Disablement of	15 Jun 91	NAVAIR MSG P272019Z Sept 91

1. **INTRODUCTION.**

2. This work package (WP) provides the test procedures for T56−A−427 turboprop engines. The procedures apply to engines made up of a depot−processed power section assembly unit (complete with accessories and external parts), a slave reduction gear assembly unit, and a slave anti−icing shroud and torquemeter assembly unit.

3. **TEST CELL OPERATING PRECAUTIONS.**

4. Refer to NAVAIR 02B−5DG−6−1, WP 023 00 for the test cell operating precautions.

5. **ENGINE STARTING AND ENGINE SHUTDOWN. PROCEDURES.**

6. Refer to NAVAIR 02B−5DG−6−1, WP 023 00 for the engine starting and engine shutdown procedures.

7. **ENGINE TEST REQUIREMENTS.**

8. Test requirements and limits shall be in accordance with procedures in NAVAIR 02B−5DG−6−1, WP 023 00 and following paragraphs 9 through 35.

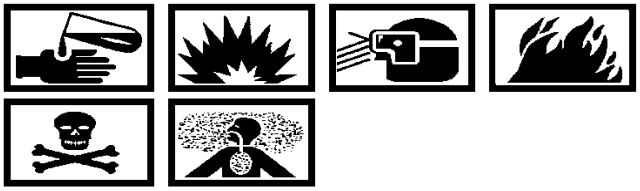

Aviation Turbine Fuel
MIL−T−5624 (Grade JP−4, JP−5) 54

9. FUEL SPECIFICATION. Use MIL−T−5624, JP−4 or JP−5 fuel.

Lubricating Oil, MIL−PRF−23699 2

10. OIL SPECIFICATION. Use MIL−PRF−23699 lubricating oil.

11. FUEL AND OIL LEAKAGE LIMITS. Refer to table 1 for leakage limits. The combined fuel leakage shall not exceed five cc's per minute from all fuel drain locations.

12. FUEL SYSTEM OPERATING PARAMETERS.

13. Fuel Inlet Pressure. Inlet fuel pressure shall be 5−40 psig.

Table 1. Maximum Allowable Seal Leakage

Location	Oil	Fuel
Alternator	2cc/hr	——
Fuel Control	2cc/hr	1cc/hr
Fuel Pump	2cc/hr	1cc/hr
Manifold Drain Valve	——	*2cc/hr
NTS Plunger	2cc/hr	——
Propeller Shaft	None	——
Spare Pad	2cc/hr	——
Starter Shaft	2cc/hr	——
Tachometers (each)	2cc/hr	——
Speed Sensitive Valve	2cc/hr	——

*Max Continuous

14. Fuel Pressure Fluctuation.

a. If fuel pressure fluctuation during stabilized power setting affects fuel flow, compensated turbine measured temperature, and tachometer readings in such a way that it is impossible to get an accurate reading, the fluctuation is excessive and shall be investigated and corrected before continuing test run.

b. Fuel pressure fluctuation effect shall not cause the following parameters to exceed the following limits:

(1) Compensated turbine measured temperature: ± 18°F (10°C).

(2) Fuel flow: ± 50 pounds per hour (pph).

(3) Torque: ± 300 inch−pounds (in. lbs).

15. Maximum and Minimum Fuel Flow Limits. (Fuel Governor Check) (See table 2)

a. Maximum corrected fuel flow during stabilized operation should not exceed 2500 PPH for JP4, JP5, or JP8 fuel.

b. Minimum corrected fuel flow should not be less 280 pph during any stabilized operation.

c. If limits are exceeded, check the following:

(1) Thermocouples.

(2) Test cell wiring.

(3) Fuel measuring equipment.

Table 2. Fuel Topping Governor Chart

Fuel Flow LB/HR	Min RPM	%	Max RPM	%
2750	14838	104.21	14998	105.33
2700	14847	104.27	15007	105.39
2650	14856	104.33	15016	105.46
2600	14865	104.40	15025	105.52
2550	14874	104.46	15034	105.58
2500	14883	104.52	15043	105.65
2450	14892	104.59	15052	105.71
2400	14901	104.65	15061	105.77
2350	14911	104.72	15071	105.84
2300	14920	104.78	15080	105.90
2250	14929	104.85	15089	105.97
2200	14938	104.90	15098	106.03
2150	14947	104.97	15107	106.10
2100	14956	105.04	15116	106.16
2050	14965	105.10	15125	106.22
2000	14974	105.16	15134	106.29
1950	14984	105.23	15144	106.36
1900	14993	105.30	15153	106.42
1850	15002	105.36	15162	106.48
1800	15011	105.42	15171	106.55
1750	15020	105.48	15180	106.61
1700	15029	105.55	15189	106.67
1650	15038	105.61	15198	106.74
1600	15047	105.67	15207	106.80

Fuel Flow LB/HR	Min RPM	%	Max RPM	%
1550	15057	105.74	15217	106.87
1500	15066	105.81	15226	106.93
1450	15075	105.87	15235	106.99
1400	15084	105.93	15244	107.06
1350	15093	106.00	15253	107.12
1300	15102	106.06	15262	107.18
1250	15111	106.12	15271	107.25
1200	15120	106.19	15280	107.31
1150	15130	106.26	15290	107.38
1100	15139	106.32	15299	107.44
1050	15148	106.38	15308	107.51
1000	15157	106.45	15317	107.57
950	15166	106.51	15326	107.63
900	15175	106.57	15335	107.70
850	15184	106.64	15344	107.76
800	15193	106.70	15353	107.82
750	15203	106.77	15363	107.89
700	15212	106.83	15372	107.96
650	15221	106.90	15381	108.02
600	15230	106.96	15390	108.08

16. OIL SYSTEM OPERATING PARAMETERS. The oil system shall incorporate an adequate number of 25 micron (or finer) filter elements to allow maximum oil flow within scavenge oil pressure limits.

17. Oil Boost Pressure.

CAUTION

To assure adequate lubrication during starting, turn on oil boost pump approximately one−half minute prior to starting engine.

a. Oil boost pressure shall be maintained at 1−6 psig. Measure at power section and reduction gear oil inlet pressure tap.

18. Oil Inlet Pressure. Oil inlet pressure to the power section and the reduction gear shall be maintained at 4.0 − 4.5 psig.

19. Oil Pressure. Oil pressures at 14,239 rpm and oil inlet temperature of 175 − 185°F (79 − 85°C) shall be as follows:

a. Reduction gear oil pressure shall be 175 − 220 psig; 180 psig is preferred.

b. Power section oil pressure shall be 50 − 60 psig.

20. Oil Pressure Fluctuation. During stabilized power settings, the maximum allowable oil pressure fluctuation, for power section shall be ± 3 psig and reduction gear assembly shall be ± 10 psig of average pressure.

21. Oil Inlet Temperature.

a. Power section and reduction gear normal operation.

(1) During oil consumption check, maintain oil inlet temperature at 175 − 185°F (79 − 85°C) while oil pressure adjustments are made, while setting torquemeter, and when taking torquemeter readings or performance evaluation.

(2) The oil inlet temperature may vary between 140 and 185°F (60 − 85°C) during all other periods of normal operation.

b. Power section and reduction gear warm−up.

(1) Operate the engine at ground idle when oil inlet temperature is less than 32°F (0°C). The engine may be operated up to 1000 HP with oil inlet temperatures of 32 − 140°F (0 − 60°C) provided the following oil pressure limitations are observed:

(a) Power section oil pressure is permissible up to but not to exceed 100 psig during warm−up.

(b) Reduction gear oil pressure may exceed 250 psig during warm−up for two minutes maximum.

22. Scavenge Oil Pressure.

a. Scavenge oil pressure shall be maintained at 75 − 80 psig at Max Continuous and 80 psig at all other conditions.

b. Before shutdown, open the scavenge back pressure regulating valve to obtain the lowest scavenge pressure available. This valve shall remain open during start−ups to assure sufficient oil during the starting sequence.

23. Oil Flow.

a. Total oil flow shall not exceed following limits:

Rating	Oil flow (lbs/min)
Above ground idle	175
Ground Idle	171

24. Oil Consumption.

NOTE

The oil inlet temperature shall be maintained between 175 − 185°F (79 − 85°C) during oil consumption check.

a. Total oil consumption at max continuous and intermediate of power section and reduction gear shall not exceed 0.7 lbs/hr (or 0.35 gal/hr).

b. To calculate oil consumption, use following formula:

$$\text{Oil Consumption (lbs/hr)} = \frac{\text{Oil Lost (lbs)}}{\text{Running Time (min)}} \times 60 \left(\frac{\text{min}}{\text{hr}}\right)$$

25. Oil Vapor.

a. Some spewing or smoking is acceptable providing oil consumption and diffuser sump pressure are within limits.

b. Excessive oil spewing from power section breathers, or smoking from compressor rear seal vents in diffuser during stabilized operation is not acceptable.

26. VIBRATION (SUPPORT EQUIPMENT SYSTEM).

a. Vibration readings will be taken with a 15 Hz filter and a 150 Hz filter in the measuring system. Readings shall be taken during all stabilized running.

CAUTION

To minimize engine damage, the engine shall be shut down immediately if excessive vibration is encountered which appears to be caused by a mechanical failure or impending failure, such as a steady vibration increase after reaching ground idle; or if sparking or other abnormal engine operation is noted.

b. A scan through the full range of power lever travel (move power lever slowly) shall be made. Any peaks exceeding specified vibration limits (steps c. and d.) occurring at other than stabilized running points shall be recorded. Shut down engine immediately if excessive vibration is encountered or abnormal engine operation is noted.

c. Vibration limits with 150 Hz filter in measuring system are as follows:

(1) Compressor — 2.0 mils maximum at any condition except seal break−in run. Maximum limit during seal break−in run is 1.5 mils.

(2) Turbine — 2.0 mils maximum at 75% (10,720 rpm) max continuous and above or 4.0 mils at 10,100 − 10,500 power section rpm unless otherwise specified.

(3) Turbine or compressor during start at acceptance run — If 2.0 mils is exceeded, satisfactory engine operation shall be demonstrated immediately by making two successive engine starts where vibration does not exceed 2.0 mils.

(4) Reduction Gear — 3.0 mils maximum during stabilized running and vibration scanning.

d. Vibration measured with 15 Hz filter in measuring system is indicative of test equipment operation as affected by engine mounting, slave propeller etc. and is not a measure of acceptability. If vibration exceeds 30.0 mils, the test equipment should be inspected for probable cause of excessive vibration.

27. VIBRATION (ENGINE MONITORING SYSTEM). The Engine Monitoring System (EMS) incorporates three engine detail electric piezo accelerometers (vibration pickups) located at reduction gear rear housing, compressor air inlet housing, and rear turbine bearing support. The output of each accelerometer may be displayed on the Handheld Maintenance Terminal (HMT) when connected to the Engine Analyzer Unit (EAU). The output of the accelerometers is measured in inches per second instead of mils.

CAUTION

To minimize engine damage, engine shall be shut down immediately if excessive vibration is encountered which appears to be caused by a mechanical failure or impending failure, such as a steady vibration increase after reaching ground idle; or if torching or other abnormal engine operation is noted.

a. Observe accelerator output readings through full range of power lever travel. Any peaks exceeding vibration limits (table 3) occurring at other than stabilized running points shall be recorded for comparison with readings recorded in paragraph 26, this WP. Shut down engine if excessive vibration is encountered or abnormal engine operation is noted.

b. Interrogate EAU for vibration readings as follows:

(1) Overall vibration reading may be displayed by pressing HMT menu key four times. CVIB, GVIB, TVIB and % RPM will be displayed.

(2) Specific components at propeller and engine rotational frequencies maybe displayed on HMT by entering display mode and keying the applicable codes (table 4).

Table 3. Maximum Acceptable Limits (Inches per second)

Location	Prop 1106 RPM (18.4 Hz)	Ground Idle 13,800 RPM (230 Hz)	100% 14,239 RPM (237.3 Hz)
Compressor	1.0	1.7	1.7
Turbine	1.0	1.7	1.7
Reduction Gear	1.0	2.2	2.2

Table 4. Propeller and Engine Rotational Frequency Codes

Location	Prop Rotational 18.4 Hz	Code Engine Rotational 230 Hz	Engine Rotational 237.3 Hz
	NOTE Use SPACE key between CV, TV or GV and numbers.		
Compressor	CV 02	CV 11	CV 12
Turbine	TV 02	TV 11	TV 12
Reduction Gear	GV 02	GV 11	GV 12

28. COMPENSATED TURBINE MEASURED TEMPERATURE. The Compensated Turbine Measured Temperature (CTMT) is a resultant output signal from the Digital Electronic Trim Control (DETC). The DETC processes the Turbine Measurement Temperature (TMT) (gas temperature at third stage turbine vanes) to compensate for the thermodynamic match between TMT and Turbine Inlet Temperature (TIT) and outputs this signal as CTMT. Both TMT and CTMT may be read on the Handheld Maintenance Terminal (HMT). Refer to table 5 for maximum allowable CTMT.

Table 5. Maximum Allowable Compensated Turbine Measured Temperature

Condition	Max Allowable CTMT	Disposition
Starting	1515°F (823.9°C)	If exceeded, borescope inspection of turbine required.
Transient and stabilized running	1589°F (865°C)	Normal. No action required.
	1590 − 1705°F (865.6 − 929.4°C) for three seconds maximum	If time limit is exceeded within temperature range, borescope inspection of turbine required.
		If 1705°F (929.4°C) is exceeded, removal and inspection of thermocouples and fluorescent penetrant inspection of first stage turbine blades required.
Torching at any time.	——	Removal and inspection of thermocouples and borescope of turbine required.

29. DIFFUSER SUMP PRESSURE. During any stabilized condition, diffuser sump pressure shall not exceed 11 in. Hg above atmospheric pressure.

30. TURBINE FLANGE AIR LEAKAGE.

NOTE

Air leakage from three and nine o'clock strut positions is a result of labyrinth seal venting. It is not cause for engine rejection unless accompanied by oil or oil vapors.

Excessive air leakage from the turbine flanges and key slot areas can be determined by extremely hot air (uncomfortable to the hand) within 2.00 in. of the turbine shroud.

a. Check air leakage during engine test at minimum power setting.

NOTE

Do not run the engine above the minimum power setting or longer than five minutes without the test shroud installed.

b. The source of air leakage may be verified by momentarily removing the turbine test shroud.

c. If excessive leakage is encountered, retorque the flange bolts, attach the turbine shroud and check for leakage indications. If the problem is not corrected, reject the engine.

31. SPEED CONTROL.

a. After final control settings have been made, power section speed fluctuations shall not exceed ± 50 rpm at low speed idle, idle, and flight idle.

b. At all scheduled power lever settings above FLIGHT IDLE, speed fluctuations shall not exceed ± 70 rpm.

c. Power section shall be 14,239 ± 70 rpm in flight range.

32. GOVERNOR SPEED.

a. Engine speed shall be 14,169 − 14,309 rpm while operating in flight range with propeller governor ON and at sufficient engine power output to cause propeller to govern.

33. SAFETY COUPLING. Decoupling of safety coupling should not occur when engine is being tested in a test cell. However, the engine shall be removed for replacement of torquemeter−safety coupling assembly if engine decouples and will not recouple. This can be determined by audible ratcheting noises from safety coupling during last stages of engine coastdown or inability to rotate turbine by pulling propeller through in normal direction of rotation.

34. MAXIMUM SHAFT HORSEPOWER.

CAUTION

The digital electronic trim control (DETC) does not provide temperature and torque limiting in OFF mode. Use caution when running the engine with the DETC in OFF mode.

a. Actual engine output with DETC in OFF mode shall not exceed 23,539 in. lbs (5318 horsepower) as indicated on torquemeter indicator. If 23,539 in. lbs is reached, run at the compensated turbine measured temperature (CTMT) where 23,539 in. lbs was reached.

b. During power transients, a torque in excess of 23,539 in. lbs but less than 24,566 in. lbs (5550 horsepower at 14,239 rpm) shall be permitted for three seconds maximum.

c. During power transients, an instantaneous torque less than 26,557 in. lbs (6000 horsepower at 14,239 rpm) shall be permitted.

35. POWER TRANSIENTS.

a. During all power transients, the engine shall operate free of objectionable combustion roughness, combustion extinction, and compressor instability.

b. Power transients shall be considered accomplished when power is maintained with ± 1.5 percent of final value.

c. For power lever movements of one second or less, the time required to accomplish 95 percent of the power change safely shall be 1.5 seconds minimum and shall not exceed the following time limits. Refer to paragraph 34, this WP for applicable torque and time limitations.

(1) From ground idle to maximum continuous power − 10 seconds (0.167 minutes) maximum.

(2) From flight idle to maximum continuous power − 5 seconds (0.083 minutes) maximum.

(3) From maximum continuous power to full reverse − 7 seconds (0.116 minutes) maximum.

(4) From low speed ground idle to ground idle − 15 seconds (0.25 minutes) maximum.

36. **ENGINE FUNCTIONAL RUN BEFORE ENGINE TEST.**

37. PRESTARTING ADJUSTMENTS AND CHECKS.

Support Equipment Required

Part No./Type Designation	Nomenclature
23032969	Terminal, Handheld Maintenance (HMT)

a. Calibrate DETC to coordinator by using the HMT. Begin calibration routine by first pressing CAL, and then PLA keys. The DETC will prompt with further instructions.

b. Calibrate DETC to the torquemeter by using the HMT. Begin calibration routine by first pressing CAL, HP, ENTER keys.

(1) Using the +, −, and “CHANGE INCREMENT” keys, insert correct torquemeter span calibration number. This five digit number is etched onto the torquemeter teeth. After this number is entered, press ENTER key.

(2) Press CAL LOCK key. The previous values will be stored in the DETC.

c. Clear the DETC fault register. This step can be performed only after all engine electrical connections have been made. Press READ FAULT key. If the DETC indicates NO FAULTS FOUND, then the register is already clear. If any faults are recorded, press CLEAR FAULT, YES, and ENTER keys until the DETC indicates a clear register.

d. Adjust condition lever linkage if necessary to obtain full lever travel.

e. Check installation and connection of magnetic plugs. Test magnetic plug indicator lights on panel for proper operation.

38. STARTING PROCEDURE.

a. No start shall be attempted with a residual compensated measured turbine temperature above 450°F. If turbine temperature is higher than 450°F, motor engine to reduce temperature.

b. At any magnetic plug light indication, engine shall be shut down and magnetic plug checked and cleared before further engine operation. The indication, its location, and the cause of indication shall be recorded on engine test log sheet.

c. During all starts, the following starter duty schedule will be observed:

Max Starter ON Time	Min Starter OFF Time
1 minute	5 minutes
1 minute	5 minutes
1 minute	20 minutes

CAUTION

Before motoring the engine or initiating a start, prime the fuel pump by loosening the fuel inlet line at the engine and letting the air bleed from the line while the stand boost pump is running.

d. Panel master switch − ON

e. Stand fuel switch − ON

f. Ground idle switch − LOW SPEED IDLE

g. Condition lever − RUN

h. Digital Electronic Trim Control − CONTROLLING

i. Ignition check switch − NORMAL

j. Power lever − advance to test indicator reading corresponding to 20° coordinator power lever position.

k. Starter switch − ON. Leave in ON position until power section reaches 7,800 rpm.

CAUTION

Do not operate ignition for more than three minutes continuous or for more than two minutes ON, three minutes OFF, two minutes on in any 30 minute period.

l. A timer switch shall be turned on simultaneously with the starter switch and turned off when the power section reaches stabilized low speed idle.

m. During start, pump paralleling indicating light shall be ON, then go out at approximately 9,000 rpm. Record speed at which light goes OUT. Record Block 1 data for start. (Refer to paragraph 58, this WP).

n. Accelerate to High Speed Ground Idle (HSGI) speed. Stabilize at HSGI for one minute. Record Block 2 data. (Refer to paragraph 58, this WP).

o. Bleed valves should close at approximately 13,000 rpm.

p. Time from starter ON to stabilized Low Speed Ground Idle (LSGI) rpm shall not exceed the following limits. Starter air pressure shall be 42 PSIG maximum for Bendix starter and 55 PSIG maximum for Airesearch starter at a temperature of 90°F (32.2°C) maximum. The minimum allowable time between first and second ground starting attempts shall be five minutes and 20 minutes between second and third attempts. If start time limit is exceeded, contact Engineering.

CIT°F	(°C)	Max Start Time − Min
0	(−17.8)	.65
10	(−12.2)	.65
20	(−6.7)	.65
30	(1.1)	.65
40	(4.4)	.65
50	(10.0)	.65
60	(15.6)	.65
70	(21.1)	.70
80	(26.7)	.75
90	(32.2)	.80
100	(37.8)	.85

39. COMPRESSOR AND TURBINE SEAL BREAK−IN. A seal break−in run is required and shall be accomplished during the first start when any of the following maintenance actions have been performed:

a. Initial power section build.

b. Compressor case (half) removed and reinstalled.

c. Compressor case and rotor replaced.

d. Compressor air inlet housing or diffuser replaced.

e. Compressor vane segment replaced.

f. Turbine vane segment replaced.

g. Turbine inlet or vane case replaced.

h. Turbine rotor replaced.

40. COMPRESSOR AND TURBINE SEAL BREAK − IN SCHEDULE.

CAUTION

Compressor and turbine vibration should be carefully watched during all start−ups, accelerations, and stabilized running done per the seal break−in run procedure. If at any time the compressor vibration exceeds 1.5 MILS, or turbine vibration with the 150 Hz. filter−in exceeds 4.0 MILS, immediately reduce power to the next lower setting. If excessive vibration is present at LSGI, the engine should be shut down.

If a power section lock−up is noted at any time during seal break−in or any other portion of the test, the engine shall be allowed to cool until such time as the power section rotates freely without evidence of excessive scraping or drag.

NOTE

DETC shall be in LIMITING for the entire seal break−in schedule.

If torquemeter setting needs to be performed, refer to paragraph 41, this WP.

a. Set DETC to LIMITING mode.

b. Motor engine to maximum rpm attainable with starter, then immediately de−energize starter and allow engine to coast to a complete stop. During coastdown, listen for excessive scraping or rubbing noises. If these occur, repeat motoring operation.

c. Start engine and allow it to accelerate to 6,000 rpm, then cut the fuel and allow engine to coast to a complete stop.

d. Start engine and allow it to accelerate to 8,000 rpm, then cut the fuel and allow engine to coast to a complete stop.

e. Start engine and allow it to accelerate to LSGI (10,300 rpm). Run at this setting for one minute, then cut the fuel and allow engine to coast to a complete stop.

f. Start engine and accelerate to LSGI (10,300 rpm). Run at this setting for at least two minutes.

g. Using reset switch, accelerate to 12,000 rpm, then return immediately to LSGI. Run at this setting for three minutes.

h. Using reset switch, accelerate to 12,800 rpm, then return immediately to LSGI. Run at this setting for three minutes.

i. Accelerate to (HSGI), and run two minutes at this setting.

j. Slowly accelerate to 14,239 engine rpm, minimum CTMT for one minute, then return to idle for three minutes.

k. Slowly accelerate to 14,239 engine rpm and 1100°F (593.3°C) CTMT for one minute, then return to idle for three minutes.

l. Slowly accelerate to 14,239 engine rpm and 1300°F (704.4°C) CTMT for one minute, then return to idle for three minutes.

m. Slowly accelerate to 14,239 engine rpm and 1500°F (815.5°C) CTMT for one minute, then return to idle for three minutes.

n. Slowly accelerate to 14,239 engine rpm and 1589°F (865°C) CTMT, or torque limit, for one minute, then return to idle for three minutes.

o. Repeat step n.

p. Slowly accelerate to 14,239 engine rpm and 1589°F (865°C) CTMT or torque limit for five minutes. Return to idle and proceed with adjustments and checks.

41. TORQUEMETER SETTING. This procedure sets the torquemeter indicator to read 2000 in. lbs less than actual torque. All torque measurements shall be corrected by adding 2000 in. lbs to the indicated reading. Record only corrected torque reading.

NOTE

On Acceptance run, torquemeter may be set using settings from functional run.

a. Set torquemeter to known power point per following steps.

b. Operate engine at LSGI, 180°F (82.2°C) oil temperature, and minimum torque. Stabilize at this setting for five minutes.

c. With torque−cal switch on Cal A position, set Cal A to a negative 4,000 lb in and with torque−cal switch on Cal B position, set Cal B to value resulting from calibration number less 4,000 in. lbs.

d. Switch to Torque. Torque meter indicator should read −1924 ± 50 in. lbs (76 in. lbs actual torque).

e. Adjust Cal A and Cal B equally by the difference between −1924 in. lbs and actual torquemeter reading (step d.) to correct actual reading to −1924 in. lb,

f. Switch torque−cal switch to Torque position to check Cal A and Cal B settings. Torquemeter indicator should read −1924 ± 50 in. lb. If not, readjust Cal A and Cal B points (step e.).

42. DIGITAL ELECTRONIC TRIM CONTROL TORQUE CALIBRATION.

NOTE

Verify that the correct torquemeter span number has been inserted (paragraph 37, step b.). This span number is the number etched on the teeth of the torquemeter.

a. Calibrate the torque measurement in DFTC using the HMT at HSGI (approx. 300−400 hp). Adjust power lever as required to reach 1735 in. lbs torque. Stabilize at this setting for one minute.

(1) Calculate engine horsepower, by multiplying engine torque times engine RPM and dividing by 63025.32. This horsepower value shall be used for setting the DETC.

b. With the HMT, press CAL, HP, ENTER, ENTER, to reach the offset calibration of torquemeter.

c. Using the +, −, and “CHANGE INCREMENT” keys, insert correct torquemeter offset calibration number. This number is correct when the horsepower (HP) measured by the DETC agrees with the horsepower obtained in step a. (1) within ± 10 HP. To achieve this accuracy, it may be necessary to record and average the DETC HP for several seconds. When complete, press ENTER.

d. Press CAL LOCK. The previous values will be stored in the DETC.

43. ON−BOARD ENGINE TRANSDUCER CHECK.

a. Adjust power lever as required to reach HSGI. Stabilize at this setting for one minute.

b. With engine operating at HSGI, verify that all DETC output parameters are within proper ranges. Using the DETC serial data bus, verify that DETC and test cell transducers agree within the following bands. Record both DETC and test cell parameters.

DETC Parameter	Test Cell Parameter	Band
CIT	CIT	±8°F (−13.3°C)
CIP	CIP	±.5 PSIG
PS7	CELL REF	±.5 PSIG
N1	N1	± 30 RPM
N2	N2	± 30 RPM

NOTE

Vibration samples may be taken with 150 Hz filter only in the circuit.

c. With engine operating at HSGI, verify that non DETC engine transducer (vibration pickups) parameters are within proper ranges. Using test cell signal conditioning equipment, verify that engine and test cell transducers agree within the following ranges. Record both engine and test cell parameters.

Parameter	Band (±)
Turbine Vibration	0.25 MILS
Compressor Vibration	0.25 MILS
Reduction Gear	0.25 MILS

d. Record engine transducer outputs for Compressor Discharge Pressure (CDP) in volts and Compressor Discharge Temperature (CDT) in ohms.

44. HYDROMECHANICAL FUEL SCHEDULE CHECK.

NOTE

The hydromechanical fuel schedule check will not be made when the compressor air inlet temperature is lower than +20°F (−6.7°C)

Certain ambient conditions, such as reduced inlet pressure, may not allow the engine to reach max torque or CTMT.

a. With power lever at 20° position, select LIMITING mode for the DETC.

b. Advance power lever to 70° position. Record the following data.

(1) Power lever position

(2) RPM

(3) Fuel flow−lbs hr

(4) CTMT−°F

(5) CIT−°F

(6) Compressor Inlet Pressure − inches HgA.

c. For satisfactory hydromechanical fuel control operation, the fuel flow shall be within the following limits:

CIT°F	Fuel Flow	CIT°F	Fuel Flow
−10	2238−2608	60	1655−2025
0	2162−2532	70	1578−1948
10	2061−2431	80	1518−1888
20	1984−2354	90	1441−1811
30	1893−2263	100	1381−1751
40	1817−2187	110	1310−1680
50	1720−2091		

d. Note power section main oil pressure. If adjustment is required, refer to NAVAIR 02B−5DG−6−1, WP 023 00.

45. DIGITAL ELECTRONIC TRIM CONTROL CHECK.

a. With DETC in CONTROLLING mode, advance PLA angle from idle to 70°. Use the HMT to read power lever angle.

b. Read HP from the HMT. This value should be 3,393 ± 75 HP if inlet temperature is 90°F (32°C) or below.

c. Advance power lever to 90°. CTMT should be 1589 ± 5°F (865 ± 3°C). Read TMT from the HMT, this value should be 880.0 ± 3°C. CTMT as read from the HMT shall agree with CTMT as read from test stand indicator within ± 10°F (± 5.5°)

d. Retard power lever to idle. Set DETC selector switch to LIMITING.

e. Advance power lever to 90°. CTMT should be 1589 ± 5°F (865 ± 3°C). Read TMT from the HMT, this value should be 880.0 ± 3°C.

46. ANTI−ICING AIR VALVE OPERATION CHECK. Retard power lever to 60° position. Move anti−icing valve check switch to Air On. For satisfactory operation anti−icing air valve gage shall read at least 30 PSIG. Record gage readings before, during, and after check. Record CTMT rise.

47. MECHANICAL FUEL SHUT−OFF. Shutdown engine by moving condition lever to feather position. Immediately following shutdown, move fuel and ignition switch to the cut−off position.

48. PROPELLER BRAKE SYSTEM CHECK.

a. Immediately after shutdown, apply torque clockwise at alternator shaft of the reduction gear. Record torque value at which breakaway occurs. Torque shall not exceed 178 ft lbs.

b. While reduction gear is still hot, apply 225 ft lbs of torque counterclockwise to alternator shaft.

c. Apply torque to the alternator shaft in a clockwise direction and record the breakaway torque value.

d. Motor engine to approximately 3500 RPM using the starter and let the engine coast to a complete stop. Repeat this until ten complete cycles have been completed.

49. FUEL CONTROL GOVERNOR CHECK.

a. Restart engine. Move power lever to 34° position and select OFF mode on DETC.

b. Advance power lever slowly to 90° position and check fuel topping governor limits (figure 1).

NOTE

The DETC will no calculate CTMT in OFF mode.

(1) Record following data:

(a) Fuel flow (lbs hr)

(b) RPM (power section). Fluctuation shall not exceed ± 200 RPM during check.

(c) CTMT (°F). With DETC OFF, CTMT shall be manually calculated by subtracting 27°F from displayed value.

(d) Indicated torque (in. lbs)

(e) Compressor Inlet Temp. (°F)

(f) Compressor Inlet Pressure (in. Hg)

(2) If figure 1 limits are met, fuel control governor is acceptable; if not, change adjustment on fuel control governor at next shutdown, turning counterclockwise to increase speed, clockwise to decrease speed approximately 70 rpm per turn to adjusting screw. Lockwire governor adjustment.

(a) Record the amount and direction of adjustment required.

(b) Record data as specified in step b. (1) after governor adjustment is made.

c. Return to 34° PLA.

d. Shut down engine.

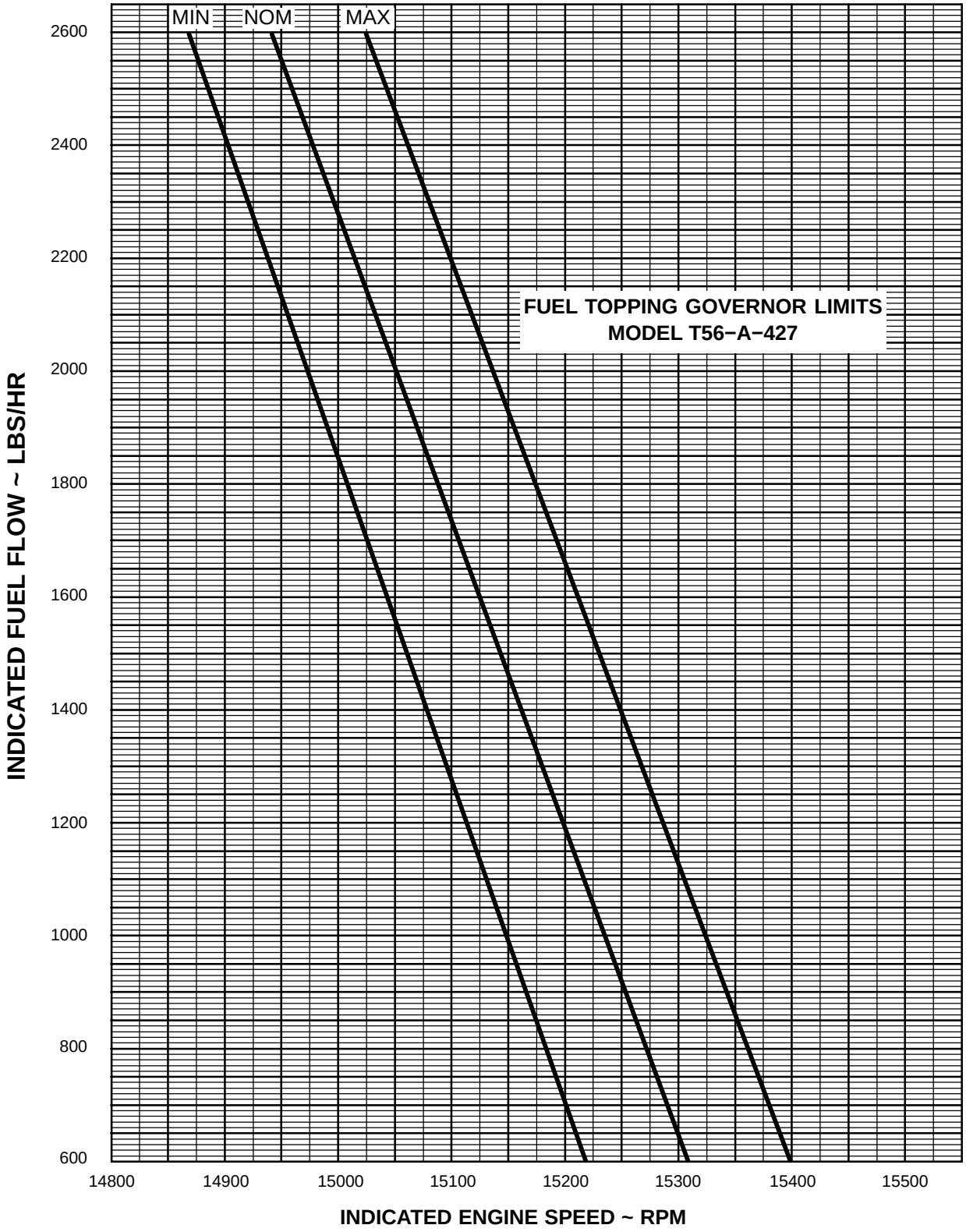

MLS078XA

Figure 1. Fuel Topping Governor Limits

50. THRUST SENSITIVE SIGNAL (TSS) SYSTEM CHECK. Restart engine and advance power lever to 40° PLA. TSS light should go Out. Retard power lever. Record PLA at which TSS light comes On. TSS light should come On between 8° and 20° PLA.

51. REVERSE THRUST OPERATION CHECK.

a. Retard power lever to 0° PLA to obtain maximum reverse thrust.

b. For satisfactory reverse thrust operation, engine RPM shall be as indicated in following table and CTMT shall not exceed 1000°F (537.7°C).

CIT°F	(°C)	Max Start Time − Min
−30	(−34.4)	14625 − 15075
−20	(28.9)	14625 − 15075
−10	(23.3)	14625 − 15080
0	(−17.8)	14625 − 15080
10	(−12.2)	14610 − 15110
20	(−6.7)	14560 − 15160
30	(−1.1)	14555 − 15165
40	(4.4)	14470 − 15270
50	(10)	14420 − 15320
60	(15.6)	14390 − 15370
70	(21.1)	14385 − 15395
80	(26.7)	14260 − 15320
90	(32.2)	14110 − 15200
100	(37.8)	13900 − 15020
110	(43.3)	13830 − 14970
120	(48.9)	13800 − 14965
130	(54.4)	13740 − 14945
140	(60)	13720 − 14940

52. FINAL CONTROL CHECK.

a. Stabilized LSGI shall be 10,300 ± 300 rpm.

b. Stabilized HSGI shall be 13,800 ± 200 rpm, except speed range limit may be higher at lower Compressor Inlet Temperature (CIT) per the following table:

CIT°F	(°C)	Ground Idle Speed Limit
60	(15.6)	+200/−200 RPM
50	(10)	+204/−196 RPM
40	(4.4)	+212/−188 RPM
30	(−1.1)	+222/−178 RPM
20	(−6.7)	+235/−165 RPM
10	(−12.2)	+254/−146 RPM
0	(−17.8)	+280/−120 RPM

53. TRANSIENT VIBRATION CHECK. Scan transient vibration through power lever travel (paragraph 26, this WP).

54. ELECTRICAL ENGINE SHUTDOWN AND NEGATIVE TORQUE SYSTEM (NTS) CHECK.

a. Move power lever to HSGI position.

b. Manipulate power lever to determine the setting which yields the minimum torquemeter reading. Arm NTS switch.

c. Move fuel and ignition cut−off switch to Cut−Off. NTS system should operate as indicated by the NTS light coming on.

55. ENGINE FUEL AND OIL LEAK CHECK. Following successful completion of functional run, the engine shall be checked for oil and fuel leaks. Correct any leakage.

56. **ENGINE TEST.**

57. ACCEPTANCE TEST RUN SCHEDULE. A functional run shall be completed before starting acceptance test run.

NOTE

DETC mode shall be determined by power point.

Refer to paragraph 58, this WP for Block Data to be recorded.

a. Approach all settings from the previous setting.

b. Include a copy of the EMS printout from the acceptance test in the test module service record card package.

c. If inlet conditions are such that maximum torque will be exceeded before reaching CTMT required for a power setting, run engine to maximum torque limit

and mark power lever position for use in acceleration checks. DETC modes and maximum torque are as follows:

DETC LIMITING and CONTROLLING mode − Maximum torque 22,574 in. lbs

DETC OFF mode − Maximum torque 23,539 in. lbs

d. Set DETC to CONTROLLING mode.

e. Start engine (paragraph 38, this WP) Record Block 1 data for the start. Stabilize at LSGI (10,300 engine rpm) for one minute. Record Block 2 data.

f. Accelerate from LSGI to HSGI. A timer switch shall be turned on simultaneously with LSGI switch and turned off when 95 percent of speed change is completed (approximately 13,800 engine rpm). Record time for acceleration and stabilized HSGI speed.

g. Stabilize at HSGI for two minutes. Record Block 2 data.

NOTE

The DETC will not calculate CTMT in OFF mode. With the DETC in OFF mode, CTMT shall be manually calculated by subtracting 27°F from Turbine Measured Temperature (TMT).

h. Set DETC to OFF mode.

i. Advance power lever to 927°F (497.2°C) TMT (900°F (482.2°C) CTMT). Stabilize at this setting for 10 minutes. Record Block 4 data at end of stabilized period. Record oil level, oil tank temperature, and time of day that oil level was read five minutes after beginning period in order to obtain an oil consumption check after completing step m. Recorded data shall be within acceptable limits.

j. Advance power lever to 1122°F (605.5°C) TMT (1095°F (590.5°C) CTMT). Stabilize at this setting for 10 minutes. Record Block 4 data at end of stabilized period. Recorded data shall be within acceptable limits.

NOTE

Following step i. applies only when CIT is below 60°F (15.6°C).

k. Advance power lever to 1227°F (663.8°C) TMT (1200°F (648.9°C) CTMT). Stabilize at this setting for 10 minutes. Record Block 4 data at end of stabilized period. Recorded data must be within acceptable limits.

l. Advance power lever to 1329°F (720.5°C) TMT (1302°F (705.5°C) CTMT). Stabilize at this setting for 10 minutes. Record Block 4 data. Recorded data shall be within limits.

(1) Perform manifold drain valve leak check. Record rate of leakage.

m. Advance power lever to 1549°F (842.7°C) TMT (1522°F (827.7°C) CTMT) or 23,539 in. lbs torque, whichever comes first, at 14,239 power section rpm. Stabilize at this setting for five minutes, then record Block 4 data. Recorded data shall be within acceptable limits.

NOTE

Step l, applies only when ambient conditions permit. If engine reaches 23,539 in. lbs torque before reaching 1522°F (827.7°C) CTMT, omit this step.

n. Advance power lever to 1616°F (881.1°C) TMT (1589°F (865°C) CTMT) or 23,539 in. lbs torque, whichever comes first, at 14,239 power section rpm. Stabilize at this point for five minutes, then record Block 4 data.

o. Reduce power lever to 927°F (497.2°C) TMT (900°F (482.2°C) CTMT). Stabilize at this setting until oil tank temperature returns to the value it had at the beginning of the oil consumption check. Record oil level, oil tank temperature, and time of day at the end of the period to complete oil consumption check. Recorded data shall be within acceptable limits.

p. Set DETC to CONTROLLING mode.

q. Increase power lever to 90° PLA. Do not exceed 1589°F (865°C) CTMT or 22,574 in. lbs torque, whichever is lower, at 14,239 power section rpm. Stabilize at this setting for five minutes then record Block 2 data. Recorded data shall be within acceptable limits.

r. Deceleration from this setting to flight idle (13,700 power section rpm and approximately 820°F (477.7°C) CTMT). Power lever movement shall be completed in not more than one second. Start timer at same time power lever is moved and stop timer when power change is completed. Record time to complete transient. Recorded data shall be within acceptable limits. Stabilize at flight idle for five minutes, then record Block 2 data.

s. Accelerate from flight idle to setting marked in step o. (1589°F (865°C) CTMT or 22,574 in. lbs torque, whichever comes first, at 14,239 power section rpm). Power lever movement shall be completed in not more than one second. Start timer at same time power lever is moved and top timer when 95 percent of power change is complete, as measured on a fast−responding torquemeter indicator. This point is calculated as shown in following sub−step (1). Do not exceed 15,378 power section rpm, 1705°F (929.4°C) CTMT, or 24,566 in. lbs torque. Record Block 5 data. Recorded data shall be within acceptable limits. Stabilize at this setting for five minutes, then record Block 2 data.

(1) Calculate torque corresponding to 95 percent of power change as follows:

95% point = (step o. torque X 0.95) +
(step p. torque X 0.05)

t. Decelerate from this setting to ground idle. Power lever movement shall be completed in less than one second. Start time at same time power lever is moved and stop timer when power change is complete. Record time to complete transient. Recorded data shall be within acceptable limits. Stabilize at ground idle for five minutes, then record Block 2 data.

u. Accelerate to setting marked in step o. (1589°F (865°C) CTMT or 22,574 in. lbs torque, whichever comes first, at 14,239 power section rpm). Power lever movement shall be completed in not more than one second. Start timer at same time power lever is moved and stop timer when 95 percent of power change is complete, as measured on a fast−responding torquemeter indicator. This point is calculated as shown in following sub−step (1). Do not exceed 15,378 power section rpm, 1705°F (929.4°C) CTMT, or 24,566 in. lbs torque. Record Block 5 data. Recorded data shall be within acceptable limits. Stabilize at this setting for five minutes, then record Block 2 data.

(1) Calculate torque corresponding to 95 percent of the power change as follows:

95% point = (step o. torque X 0.95) +
(step r. torque X 0.05)

v. Retard power lever from setting marked in step o. to maximum reverse (0° PLA). Power lever movement shall be completed in not more than one second. Start timer at same time power lever is moved and stop timer when 95 percent of power change is complete, as measured on a fast−responding torquemeter indicator. This point is calculated in following sub−step (1). Record Block 5 data. Recorded data shall be within acceptable limits. Stabilize at this setting for five minutes then record Block 2 data.

(1) Calculate the torque corresponding to 95 percent of the power change using the reverse thrust torque from paragraph 51, step b. as follows:

95% point = (step o. torque X 0.05) +
(para 51, step b. torque X 0.95)

w. Return to 70° PLA. Stabilize at this setting for two minutes. Record Block 2 data. Perform a two step transient movement by advancing power lever to setting marked in step a. (1589°F (865°C) CTMT or 22,574 in. lbs torque) and then immediately decelerating to 34° power lever angle. Entire power lever movement shall be completed in not more than one second. There shall be no evidence of opening of the 5th and 10th stage bleed valves. Record minimum RPM. Stabilize at flight idle for two minutes, then record Block 2 data. Shut down.

x. Refer to paragraph 48, steps a. through c. of Propeller Brake System Check.

y. Perform oil leak check as follows:

(1) Remove propeller. Check for oil and fuel leaks. Note any leaks and their severity on the log sheet.

(2) If any oil or fuel leaks are present and cannot be repaired on the stand, engine will be rejected for leaks. Any evidence of weeps, seeps, drips, or drops will be cause for rejection.

(3) If leaks are present and can be repaired on the stand, repair the leaks. Complete a leak check run per following sub−steps (4) and (5).

(4) Start engine and stabilize at ground idle for 30 minutes.

(5) The engine shall complete a 30 minute run with no evidence of leaks after being repaired.

58. TEST DATA TO BE RECORDED. Refer to table 6 for the test data to be recorded. The Reading or Column number and Time of Day shall be recorded as follows:

a. Record Reading or Column number to identify the line of date.

b. Record Time of Day on a 24−hour basis using a 24−hour clock.

Table 6. Test Data To Be Recorded

Block No.	Data
1	Start Data
	1.1 Start number − Arabic numeral.
	1.2 Time, in minutes, from starter ON to stabilized LSGI
	1.3 Maximum CTMT during start − °F
	1.4 Engine inlet total temperature − °F
2	Skeleton Data
	2.1 Reading number − Arabic numeral
	2.2 Time of day − hour and minutes
	2.3 Engine speed − RPM
	2.4 Fuel flow − lbs/hr (corrected for calibration error)
	2.5 Fuel temperature at the flowmeter − °F
	2.6 Vibration−Compressor, turbine, and reduction gearbox − MILS
	2.6.1 With 150 Hz filter in circuit
	2.6.2 With 15 Hz filter in circuit
	2.7 CTMT − °F
	2.8 CIP − in. HgA
	2.9 CIT − °F
	2.10 Main oil pressure, power section and reduction gear − PSIG
	2.11 Oil inlet temperature − °F
	2.12 Oil outlet temperature, power section and reduction gear− PSIG
	2.13 Scavenge oil pressure − PSIG
3	Shutdown Data
	3.1 Reading number− Arabic numeral
	3.2 Time of day − hour and minutes
	3.3 Reason for shutdown
	3.4 Record any adjustments, changes, etc., made to unit
4	Full Line of Data. Record Block 2 data and the following:
	4.1 Torquemeter reading − in. lbs
	4.2 Test cell reference pressure − in. HgA
	4.3 Fuel inlet pressure − PSIG
	4.4 Vibration − Compressor, turbine, and reduction gearbox − in./sec:
	4.4.1 With 150 Hz filter in circuit
	4.4.2 With 15 Hz filter in circuit
	4.5 Turbine front bearing sump pressure − in. Hg (gage)
	4.6 Oil level (Para 57. steps g. through m. only) − lbs
	4.7 Oil flow data (Para 57. steps g. through m. only)
	4.7.1 Oil flow time −minutes
	4.7.2 Oil flow − lbs
	4.7.3 Oil flow rate − lbs/min
	4.8 Magnetic plug indication − yes or no
5	Power Transient Data − Record for each acceleration transient.
	5.1 Reading number − Arabic numeral
	5.2 Time of day − hour and minutes
	5.3 Time, in minutes, from initiation of load change until change has been accomplished
	5.4 Maximum CTMT during power transient − °F
	5.5 Maximum rpm during acceleration − RPM
	5.6 Maximum torquemeter reading − in. lbs
6	Miscellaneous Data − Record at least once during each test
	6.1 Fuel Specific Gravity
	6.2 Fuel Lower Heating Value − Btu/lb
	6.3 Manifold drain valve opens before rotation ceases at shutdown − yes or no
	6.4 Manifold drain valve leakage rate at 75% power or above − cc/min
	6.5 Burner drain valves drainage at shutdown − yes or no
	6.6 Did burner drain valves open at shutdown if no drainage occurred − yes or no
	6.7 Barometer, outside air temperature, water vapor pressure, and time of reading
	6.8 Record total running time
	6.9 Record number of starts

59. PENALTY RUN SCHEDULES. These instructions provide schedules for penalty runs for an engine with replaced parts. The outlined requirements are for normal operations. Testing requirements previously specified in this WP apply to testing required in the following paragraphs unless otherwise stated. Any applicable portion of functional run (paragraph 36, this WP) shall be made prior to penalty run.

a. Parts removed to gain access to other parts or areas shall invoke the same penalties, per the following penalty runs, as parts removed to correct deficiencies and malfunctions. In event that more than one penalty is invoked, the most severe shall apply.

b. Perform penalty runs per penalty run schedules in table 7 and penalty applications in table 8.

Table 7. Penalty Run Schedules

Set Cond		Flight Idle	Max Cont	75% Max Cont	Flight Idle	Accelerate	Max
Schedule 1		Same as complete acceptance test run, paragraph 57, this WP					
Schedule 2	Time	5	25	10	1	2	5
Schedule 3	Time	——	5	——	——	1	——
Schedule 4	Time	5	——	——	——	——	——
Schedule 5	Time	——	10	——	——	——	——
Schedule 6	Time	1	15	10	——	——	——

Table 8. Penalty Applications

Name	Test Required If Part is Replaced	Test Required If Removed Part Reinstalled	Comments
MAJOR ASSEMBLIES			
Power Section	Schedule No. 1	None	Any Acceptable power section may be combined with any acceptable reduction gear to make an acceptable combination.
Reduction Gear			Refer to WP 022 00.
Compressor Unit Assembly	Schedule No. 1	None	This run shall be with the power section in which it is accepted.
Turbine Unit Assembly	Schedule No. 1	None	Same as above.
Compressor Rotor	Schedule No. 1	None	Same as above.
Turbine Rotor	Schedule No. 1	None	Same as above.
Accessory Drive Assembly	Schedule No. 1	None	If a pre−run accessory drive assembly is installed in another engine, it shall have a minimum of running per Schedule No. 3 to be acceptable.

COMPONENT PARTS

NOTE

Replacement of any of the following parts prior to the Acceptance Run will not require a penalty run. Parts replaced after the Acceptance Run will require a penalty run with the assembly in which it is accepted as follows:

Table 8. Penalty Applications (contd)

Name	Test Required If Part is Replaced	Test Required If Removed Part Reinstalled	Comments
		COMPONENT PARTS (contd)	
Fuel Filter Assembly	Schedule No. 4	None	Secondary pump shall drop out before engine reaches stabilized start speed.
Fuel Control	Schedule No. 3	See comments	Perform fuel control governorcheck (paragraph 49, this WP). Fuel control that successfully completed acceptance run requires penalty test. Fuel control replaced with new control requires fuel control checks and penalty test.
Fuel Nozzle, Fuel Lines, Manifolds	Schedule No. 4	See comments	Visually inspect for fuel leaks.
Flow Limiter	Schedule No. 5	None	
Coordinator	Schedule No. 4	See comments	Check fuel control and propeller linkage. Calibrate DETC to coordinator (paragraph 37, this WP) and maximum flow check (paragraph 44, this WP). Shutdown engine by moving condition lever to feather position.
Power Section Main Pressure and Scavenge Oil Pump	Schedule No. 5	None	Adjust oil pressure. (Refer to NAVAIR 02B−5DG−6−1, WP 023 00.) Take an oil flow reading at each setting.
Manifold Drain Valve	Schedule No. 5	See comments	Check fuel leakage. (Refer to NAVAIR 02B−5DG−6−1, WP 023 00.)
Propeller Brake	Schedule No. 5	See comments	Shutdown and check brake by manually rotating propeller to test lock feature.
Power section − Any Scavenge Oil Pump	Schedule No. 3	None	
Digital Electronic Trim Control	See comments	See comments	Make all DETC checks and complete all acceptance run acceleration checks.
Oil Seals — Power Section	See comments	None	Use schedule No. 5 for rear compressor, front turbine labyrinth and propeller shaft. Check all other seals at rated rpm with minimum load for ten minutes.
Compressor Air Inlet Housing	Schedule No. 2	None	
Compressor Case Assembly	Schedule No. 1	None	
Compressor Vane Assemblies	Schedule No. 1	None	

Table 8. Penalty Applications (contd)

Name	Test Required If Part is Replaced	Test Required If Removed Part Reinstalled	Comments
	COMPONENT PARTS (contd)		
Turbine Inlet Casing	Schedule No. 1	None	
Turbine Coupling Shaft	Schedule No. 5	None	
Turbine-to-Compressor Tie Bolt	Schedule No. 5	None	
Turbine Vane Casing	Schedule No. 1	None	
Turbine Coupling or Coupling Assembly	Schedule No. 5	None	
Rear Turbine Bearing Support	Schedule No. 1	None	
Combustion Chamber Outer Casing	Schedule No. 3	None	
Combustion Liner(s)	Schedule No. 1	None	
Compressor Diffuser	Schedule No. 1	None	
Combustion Chamber Inner Casing	Schedule No. 5	None	
Combustion Chamber Inner Casing Liner	Schedule No. 1	None	
Turbine Blades (New)	Schedule No. 1	See comments for pre-run blades	
Turbine Blades (Pre-run)	See comments		Replacement of any turbine blades, after Initial Acceptance Test, in any stage of turbine rotor with pre−run blades (blades that have completed an Initial Acceptance Test) will not require a penalty test. Final acceptance test will be required.
Turbine Vanes (New, First or Second Stage)	Schedule No. 1	See comments for pre−run vanes	
Turbine Vanes (Pre−run, First or Second Stage)	See comments		Replacement of any turbine vanes, after Initial Acceptance Test, in first or second stage of turbine with prerun vanes (vanes that have completed an Initial Acceptance Test) will not require a penalty test. Final acceptance test will be required.
Turbine Vanes (Third or Fourth Stage)	See comments		Replacement of any turbine vanes, after Initial Acceptance Test, in the third or fourth stages of the turbine will not require a penalty test. Final acceptance test will be required.

Table 8. Penalty Applications (contd)

Name	Test Required If Part is Replaced	Test Required If Removed Part Reinstalled	Comments
MISCELLANEOUS PARTS			
NOTE			
The following parts may be replaced after the Acceptance Run with a similar part that has successfully completed an Acceptance Run without a penalty run. If replaced with a new part, make a penalty run consisting of two starts and comply with the following:			
Burner Drain Valve	Schedule No. 5	None	
Ignition Exciter	Schedule No. 5	None	
Spark Igniter	Schedule No. 5	None	
Compressor Bleed Air Valve	Schedule No. 5	None	
Speed Sensitive Valve	Schedule No. 5	None	
Fuel Pump	Schedule No. 5	None	
Ignition Relay	Schedule No. 5	None	
Right Hand Wiring Harness	Schedule No. 5	None	
Left Hand Wiring Harness	Schedule No. 5	None	
Turbine Inlet Interstage Thermocouple	Schedule No. 5	None	Replacement limited to two per set. If more than two thermocouples are replaced, make a penalty run.
ENGINE MONITORING SYSTEM PARTS			
NOTE			
If any of the following parts are replaced comply with the following:			
Torquemeter Pickup	Schedule No. 5	See comments	Repeat on−board engine transducer check. (Refer to paragraph 43, this WP.)
Compressor Inlet Temperature Sensor	Schedule No. 5	See comments	Same as above
Compressor Discharge Transducer	Schedule No. 5	See comments	Same as above
Combined CDT/CDP Probe	Schedule No. 5	See comments	Same as above
Interconnecting Wiring Harness	Schedule No. 5	See comments	Same as above

60. **ENGINE PERFORMANCE EVALUATION.**

61. GENERAL.

a. During functional and acceptance test, indicated horsepower and fuel flow shall be recorded and corrected to standard day conditions at CTMT's of 1589°F (865°C) or max. torque, 1522°F (827.7°C) or max. torque, 1302°F (705.6°C), 1095°F (590.6°C), and 900°F (482.2°C). Refer to table 9.

(1) If ambient conditions are such that max torque is reached before 1589°F (865°C) CTMT, interpolate linearly between chart values at 1589°F (865°C) and 1302°F (705.6°C) to determine horsepower and fuel flow correction factors for Compressor Inlet Temperature.

(2) If ambient conditions are such that max torque is reached before 1522°F (827.7°C), an additional data point shall be taken at 1200°F (648.9°C) to assure that sufficient data is available to accurately determine engine performance.

b. Corrected values of horsepower and fuel flow shall be plotted versus CTMT on performance plots (figure 4 and 5).

c. From the lines drawn through test data, values of specific fuel consumption are to be computed and compared to specification values at specification horsepower. Refer to table 9.

62. PERFORMANCE LIMITS. The performance limits, which the engine shall meet or exceed on acceptance tests are provided in table 9.

63. DATA CORRECTION METHOD. The performance data shall be corrected to sea level, standard day, unity ram (static) conditions and compared to the specification values. Refer to paragraphs 64 through 70, this WP.

64. Horsepower.

a. Torque (in. lbs) as measured by the engine torquemeter, and engine speed (rpm) shall be used to calculate the observed horsepower value as follows:

$$\frac{\text{eng torq (in. lbs) X eng speed (RPM)}}{63{,}025.32} = \text{observed HP}$$

b. Using compressor inlet pressure (Pt2 in in. HgA) calculated 1/δ as follows:

$$1/\delta = 29.92/Pt2$$

(1) Subtract 0.3 in. Hg from measured compressor inlet pressure to obtain compressor inlet pressure (Pt2 in. HgA). The 0.3 in. Hg. allows for pressure drop across compressor inlet screen.

c. Multiply horsepower obtained in step a. by the value obtained for 1/δ in step b. to obtain a horsepower value corrected for inlet pressure.

d. Using measured CIT, enter the horsepower and fuel flow Correction chart (table 9) and obtain the horsepower correction factor.

e. Calculate ram pressure ratio compressor inlet pressure divided by exhaust static pressure, (Pt2/Ps7) to obtain value for the effects of ram pressure ratio. Refer to figure 2.

f. The sea level, standard day, unity ram (static) propshaft horsepower value is the algebraic sum of values obtained in steps c., d., and e.

65. Fuel Flow. Fuel flow is read from the fuel flowmeter, which has been calibrated and set at 0.800 specific gravity, and recorded to the nearest one pound per hour. Record fuel flow obtained on log sheet as observed fuel flow (Wfo).

a. Calculate Actual Fuel Flow (Wfa) as follows:

$$Wfa = Wfo \times \frac{\text{Lab, So. Gr. + Sp. Gr.}}{0.800}$$

Where:	Wfa	=	Actual fuel flow in lbs/hr
	Wfo	=	Observed fuel flow in lbs/hr
	Lab.Sp.Gr.	=	Laboratory specific gravity at 60/60 (from fuel lab.)
	ΔSp. Gr.	=	Use fuel temperature at fuel flowmeter to obtain this value from figure 3

b. Using measured CIT (°F) and CTMT (°F), enter horsepower and fuel flow correction chart (table 9) and obtain a value for ΔWf/δ.

c. Multiply value obtained for Wfa in step a by value of 1/δ obtained in step b. to obtain a value of fuel flow corrected for fuel specific gravity and compressor inlet pressure.

d. Multiply the value obtained in step c. by the ratio of the lower heating value of the fuel used for test to the lower heating value of the specification fuel (18,300 BTU/lb.).

Table 9. Horsepower and Fuel Flow Correction Chart

LHV=18,300 BTU/LB

NOTE: ACTUAL FUEL FLOW CHANGE IN BTU/HR CAN BE OBTAINED BY MULTIPLYING THE CHART VALUE BY 18,300.

1-6-88

CIT	CTMT 1589°F		1522°F		1494°F		1302°F		1095°F		900°F		CIT
°F	Δ SHP/δ	ΔWF/δ	Δ SHP/δ	ΔWF/δ	Δ SHP/δ	ΔWF/δ	Δ SHP/δ	ΔWF/δ	Δ SHP/δ	ΔWF/δ	Δ SHP/δ	ΔWF/δ	°F
130	1867	623	1845	592	1818	577	1553	485	1265	393	1007	317	130
129	1839	614	1814	583	1789	569	1528	478	1243	387	992	312	129
128	1812	606	1784	574	1761	560	1503	471	1222	381	977	308	128
127	1785	598	1754	566	1733	552	1478	464	1202	375	962	303	127
126	1758	589	1725	558	1705	544	1454	457	1182	369	948	299	126
125	1731	581	1697	550	1678	537	1431	450	1164	364	934	295	125
124	1705	573	1670	542	1661	529	1408	444	1146	359	921	291	124
123	1679	565	1644	534	1624	522	1386	438	1129	354	908	287	123
122	1653	557	1618	527	1598	515	1364	432	1113	350	895	283	122
121	1627	549	1593	520	1572	508	1342	426	1098	345	883	280	121
120	1602	541	1569	513	1546	501	1321	420	1084	341	871	276	120
119	1576	533	1542	505	1519	494	1299	414	1067	336	858	272	119
118	1549	524	1515	498	1492	486	1276	407	1050	331	844	268	118
117	1522	516	1488	490	1464	478	1253	401	1032	326	830	264	117
116	1495	507	1460	481	1437	470	1230	394	1014	320	815	260	116
115	1468	498	1431	473	1409	462	1207	387	996	315	800	255	115
114	1440	490	1402	465	1381	454	1183	381	976	309	785	251	114
113	1412	481	1372	456	1352	446	1159	374	957	303	769	246	113
112	1384	472	1342	447	1323	437	1135	367	937	297	753	242	112
111	1356	462	1311	438	1294	429	1111	359	916	291	737	237	111
110	1327	453	1280	429	1265	420	1086	352	895	285	720	232	110
109	1301	444	1253	421	1238	412	1064	345	877	280	706	228	109
108	1275	436	1227	413	1212	404	1042	339	859	274	691	223	108
107	1249	428	1201	405	1186	396	1020	332	842	269	677	219	107
106	1224	419	1176	397	1160	389	998	326	824	264	663	215	106
105	1199	411	1151	390	1134	381	977	320	807	259	649	211	105
104	1174	403	1126	382	1108	373	956	313	790	254	635	207	104
103	1149	394	1102	374	1083	366	935	307	773	249	621	202	103
102	1125	386	1078	367	1058	358	914	300	756	244	607	198	102
101	1101	378	1054	359	1033	351	893	294	739	239	594	194	101
100	1077	370	1031	352	1009	343	873	288	723	234	580	190	100
99	1051	361	1005	344	983	335	851	281	705	229	566	186	99
98	1024	353	980	335	958	327	830	274	687	223	551	181	98
97	997	344	954	327	932	319	808	268	669	218	536	177	97
96	970	335	928	318	906	310	786	261	651	212	521	172	96
95	943	326	902	310	881	302	765	254	633	206	507	168	95
94	915	317	876	301	855	293	743	247	615	201	492	163	94
93	888	308	850	292	829	285	721	240	596	195	477	158	93
92	860	299	823	283	803	276	699	232	577	189	462	154	92
91	831	290	797	274	778	268	677	225	559	183	446	149	91
90	803	281	770	265	752	259	655	218	540	177	431	144	90
89	776	272	745	257	728	251	634	211	523	171	417	140	89
88	750	263	720	248	703	243	613	204	505	166	403	135	88
87	724	254	695	240	679	235	593	198	488	160	390	131	87
86	697	246	670	232	655	227	572	191	472	155	376	126	86
85	671	237	645	224	632	220	552	185	455	150	363	122	85
84	645	228	621	216	608	212	531	178	438	144	350	117	84
83	620	219	596	208	585	204	511	171	422	139	337	113	83
82	594	211	572	200	562	197	491	165	406	134	325	109	82
81	568	202	548	192	540	189	472	158	390	128	312	104	81

Table 9. Horsepower and Fuel Flow Correction Chart

LHV=18,300 BTU/LB

NOTE: ACTUAL FUEL FLOW CHANGE IN BTU/HR CAN BE OBTAINED BY MULTIPLYING THE CHART VALUE BY 18,300.

1-6-88

CIT °F	CTMT 1589°F Δ SHP/δ	1589°F ΔWF/δ	1522°F Δ SHP/δ	1522°F ΔWF/δ	1494°F Δ SHP/δ	1494°F ΔWF/δ	1302°F Δ SHP/δ	1302°F ΔWF/δ	1095°F Δ SHP/δ	1095°F ΔWF/δ	900°F Δ SHP/δ	900°F ΔWF/δ	CIT °F
80	543	193	524	184	517	182	452	152	374	123	300	100	80
79	517	184	499	175	492	174	431	145	357	117	286	95	79
78	491	175	473	167	467	165	410	138	339	111	272	91	78
77	465	166	447	158	442	157	388	131	321	106	258	86	77
76	439	157	422	149	417	148	367	124	304	100	243	81	76
75	413	148	396	141	391	139	345	116	286	94	229	77	75
74	387	138	370	132	365	130	323	109	268	88	214	72	74
73	361	129	343	123	339	121	302	102	249	82	199	67	73
72	335	120	317	113	313	112	280	94	231	75	184	62	72
71	309	110	291	104	287	102	257	87	213	69	169	57	71
70	283	101	264	95	260	93	235	79	194	63	154	52	70
69	257	92	239	86	235	84	213	72	176	57	140	47	69
68	231	83	214	78	211	76	192	65	158	51	125	42	68
67	206	73	190	69	187	67	171	57	141	46	111	38	67
66	180	64	165	60	163	59	149	50	123	40	97	33	66
65	154	55	141	51	139	50	128	43	105	34	83	28	65
64	128	46	117	43	115	42	106	36	88	28	69	24	64
63	103	37	93	34	92	33	85	29	70	23	55	19	63
62	77	28	70	26	69	25	64	21	52	17	41	14	62
61	51	18	46	17	46	17	42	14	35	11	27	9	61
60	26	9	23	9	23	8	21	7	17	6	14	5	60
59	0	0	0	0	0	0	0	0	0	0	0	0	59
58	-27	-9	-25	-9	-24	-8	-22	-7	-18	-6	-14	1	58
57	-54	-18	-50	-17	-49	-17	-43	-14	-35	-12	-29	3	57
56	-81	-28	-75	-26	-73	-25	-65	-21	-53	-17	-44	6	56
55	-108	-37	-100	-34	-98	-33	-87	-29	-71	-23	-58	10	55
54	-136	-46	-125	-43	-123	-42	-109	-36	-89	-29	-73	15	54
53	-164	-55	-151	-51	-148	-50	-131	-43	-107	-35	-88	21	53
52	-192	-65	-176	-60	-173	-58	-153	-50	-124	-40	-103	27	52
51	-220	-74	-202	-68	-198	-67	-175	-57	-142	-46	-118	35	51
50	-248	-83	-228	-77	-223	-75	-197	-64	-160	-52	-133	44	50
49	-276	-93	-254	-86	-249	-84	-219	-71	-179	-58	-149	39	49
48	-304	-102	-281	-95	-275	-93	-242	-79	-197	-64	-164	32	48
47	-332	-112	-308	-104	-302	-102	-264	-86	-216	-71	-180	23	47
46	-360	-121	-335	-114	-328	-111	-287	-94	-235	-77	-196	12	46
45	-388	-131	-362	-123	-355	-120	-309	-102	-254	-84	-212	-1	45
44	-416	-141	-389	-132	-382	-129	-332	-109	-274	-90	-228	-16	44
43	-444	-151	-417	-142	-410	-138	-354	-117	-293	-97	-245	-33	43
42	-472	-161	-445	-151	-437	-148	-377	-125	-313	-103	-261	-52	42
41	-501	-171	-473	-161	-465	-157	-400	-133	-333	-110	-278	-73	41
40	-529	-181	-501	-171	-493	-167	-423	-141	-353	-117	-295	-96	40
39	-556	-190	-527	-180	-518	-176	-445	-148	-371	-123	-311	-105	39
38	-582	-200	-552	-189	-544	-184	-466	-156	-390	-129	-327	-113	38
37	-609	-209	-578	-197	-568	-193	-487	-163	-408	-135	-342	-120	37
36	-635	-218	-603	-206	-593	-201	-508	-170	-425	-141	-358	-127	36
35	-661	-227	-628	-215	-617	-210	-529	-177	-443	-147	-373	-132	35
34	-687	-236	-652	-223	-641	-218	-549	-184	-461	-153	-389	-137	34
33	-712	-245	-677	-231	-665	-226	-570	-191	-478	-158	-404	-140	33
32	-737	-254	-701	-240	-688	-234	-590	-198	-495	-164	-420	-143	32
31	-762	-262	-724	-248	-711	-242	-610	-205	-512	-170	-435	-145	31

Table 9. Horsepower and Fuel Flow Correction Chart

LHV=18,300 BTU/LB

NOTE: ACTUAL FUEL FLOW CHANGE IN BTU/HR CAN BE OBTAINED BY MULTIPLYING THE CHART VALUE BY 18,300.

1-6-88

CIT °F	CTMT 1589°F Δ SHP/δ	1589°F ΔWF/δ	1522°F Δ SHP/δ	1522°F ΔWF/δ	1494°F Δ SHP/δ	1494°F ΔWF/δ	1302°F Δ SHP/δ	1302°F ΔWF/δ	1095°F Δ SHP/δ	1095°F ΔWF/δ	900°F Δ SHP/δ	900°F ΔWF/δ	CIT °F
30	-787	-271	-748	-256	-734	-250	-630	-212	-529	-175	-450	-146	30
29	-812	-280	-773	-265	-758	-259	-651	-219	-547	-181	-465	-151	29
28	-838	-289	-798	-274	-782	-267	-672	-227	-566	-187	-481	-156	28
27	-863	-299	-823	-282	-806	-276	-692	-234	-584	-194	-496	-161	27
26	-889	-308	-848	-291	-830	-284	-713	-241	-602	-200	-511	-167	26
25	-914	-317	-873	-300	-854	-293	-734	-249	-621	-206	-527	-172	25
24	-939	-326	-899	-309	-878	-302	-755	-256	-640	-213	-542	-177	24
23	-964	-336	-924	-318	-902	-310	-775	-263	-659	-219	-557	-182	23
22	-989	-345	-949	-328	-926	-319	-796	-271	-678	-226	-573	-187	22
21	-1014	-355	-975	-337	-950	-328	-817	-278	-697	-232	-588	-193	21
20	-1039	-364	-1000	-346	-974	-337	-838	-286	-716	-239	-603	-198	20
19	-1062	-373	-1021	-354	-995	-345	-857	-293	-732	-245	-617	-203	19
18	-1084	-381	-1042	-362	-1016	-353	-875	-299	-748	-250	-630	-208	18
17	-1106	-389	-1062	-869	-1036	-360	-893	-306	-764	-256	-643	-212	17
16	-1127	-397	-1082	-377	-1056	-368	-911	-313	-779	-262	-656	-217	16
15	-1148	-405	-1101	-384	-1076	-375	-929	-319	-794	-267	-669	-222	15
14	-1169	-413	-1119	-391	-1094	-382	-946	-325	-808	-272	-681	-226	14
13	-1189	-421	-1136	-398	-1113	-389	-962	-331	-822	-277	-693	-231	13
12	-1208	-428	-1153	-405	-1131	-396	-978	-337	-835	-282	-705	-235	12
11	-1227	-436	-1169	-412	-1148	-402	-994	-343	-848	-287	-717	-240	11
10	-1246	-443	-1184	-418	-1165	-409	-1010	-349	-861	-292	-728	-244	10
9	-1266	-451	-1203	-426	-1184	-416	-1028	-356	-876	-298	-740	-249	9
8	-1286	-459	-1223	-433	-1204	-424	-1045	-362	-891	-303	-752	-253	8
7	-1306	-467	-1242	-441	-1223	-431	-1063	-369	-906	-309	-764	-258	7
6	-1326	-474	-1262	-448	-1242	-439	-1080	-375	-921	-314	-776	-262	6
5	-1346	-482	-1282	-456	-1262	-447	-1098	-382	-936	-320	-788	-267	5
4	-1365	-490	-1302	-464	-1281	-454	-1116	-389	-951	-326	-800	-272	4
3	-1385	-498	-1322	-472	-1300	-462	-1134	-395	-967	-331	-811	-276	3
2	-1404	-505	-1343	-480	-1320	-469	-1152	-402	-982	-337	-823	-281	2
1	-1424	-513	-1363	-488	-1339	-477	-1170	-409	-997	-343	-835	-285	1
0	-1443	-521	-1384	-496	-1359	-485	-1188	-416	-1013	-349	-846	-290	0
-1	-1462	-528	-1402	-503	-1377	-492	-1204	-422	-1027	-354	-857	-294	-1
-2	-1480	-536	-1420	-510	-1394	-499	-1220	-428	-1040	-359	-869	-299	-2
-3	-1498	-543	-1437	-517	-1412	-505	-1236	-434	-1053	-364	-880	-303	-3
-4	-1516	-550	-1454	-524	-1429	-512	-1251	-440	-1066	-369	-891	-308	-4
-5	-1534	-557	-1471	-530	-1446	-519	-1266	-446	-1079	-374	-902	-312	-5
-6	-1551	-564	-1487	-537	-1462	-525	-1281	-451	-1091	-379	-913	-316	-6
-7	-1568	-571	-1503	-543	-1478	-531	-1295	-457	-1103	-384	-924	-320	-7
-8	-1585	-578	-1519	-549	-1494	-537	-1310	-462	-1115	-388	-935	-325	-8
-9	-1602	-584	-1534	-555	-1510	-543	-1323	-468	-1127	-393	-946	-329	-9
-10	-1619	-591	-1549	-561	-1525	-549	-1337	-473	-1138	-397	-957	-333	-10
-11	-1637	-598	-1567	-568	-1543	-556	-1353	-479	-1152	-402	-966	-337	-11
-12	-1656	-606	-1586	-575	-1561	-563	-1370	-485	-1166	-408	-975	-342	-12
-13	-1674	-613	-1605	-583	-1579	-570	-1386	-492	-1180	-413	-983	-346	-13
-14	-1693	-620	-1624	-590	-1598	-578	-1403	-498	-1194	-419	-991	-351	-14
-15	-1712	-628	-1643	-598	-1617	-585	-1420	-505	-1209	-425	-998	-356	-15
-16	-1731	-635	-1663	-605	-1636	-593	-1437	-612	-1224	-431	-1005	-360	-16
-17	-1750	-643	-1683	-613	-1655	-600	-1455	-618	-1239	-437	-1012	-365	-17
-18	-1769	-651	-1703	-621	-1675	-608	-1473	-525	-1255	-443	-1019	-370	-18
-19	-1789	-658	-1724	-629	-1695	-616	-1491	-532	-1270	-449	-1025	-374	-19
-20	-1808	-666	-1745	-637	-1715	-624	-1509	-539	-1286	-455	-1030	-379	-20

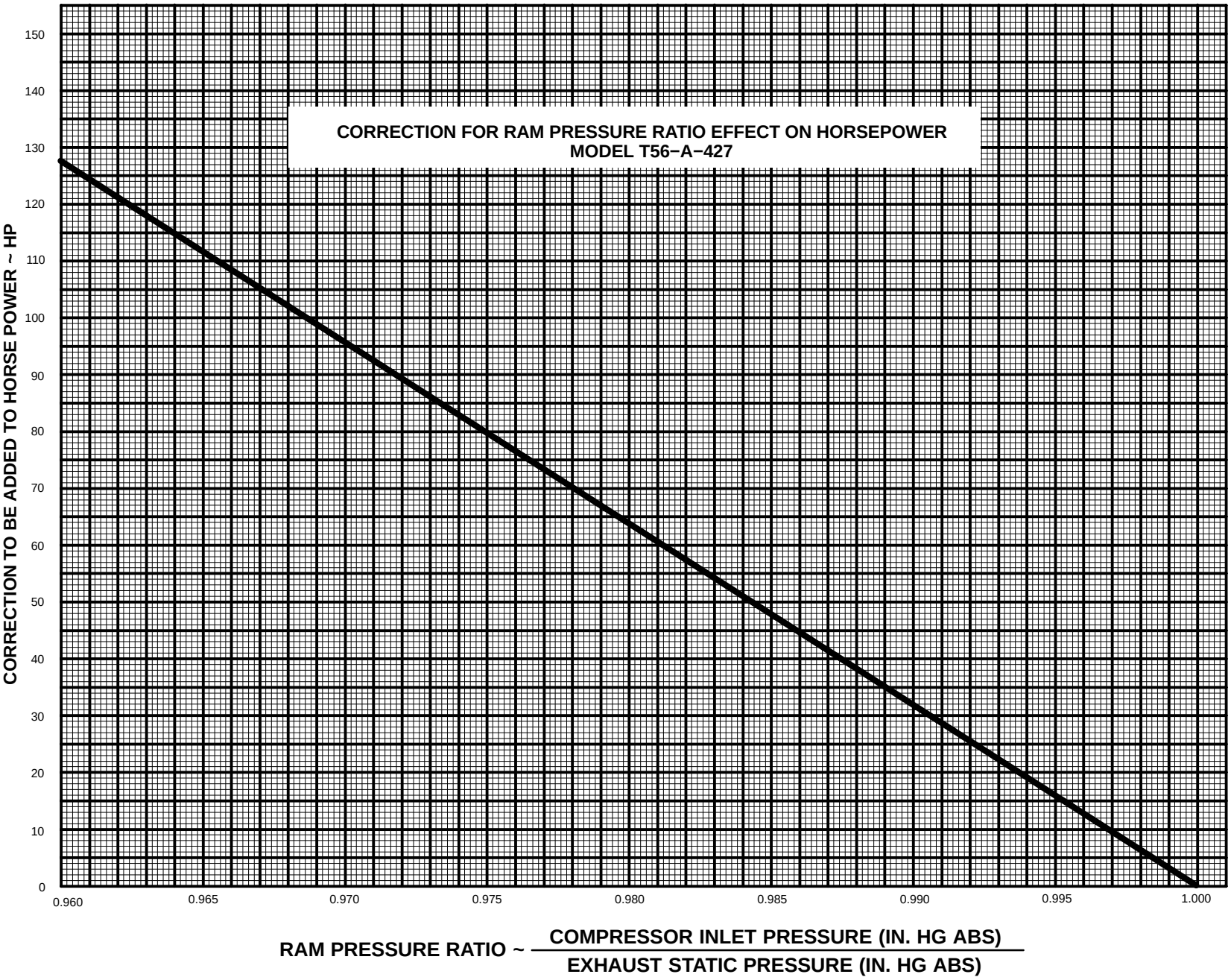

Figure 2. Correction for Ram Pressure Ratio Effect On Horsepower

MLS081XA

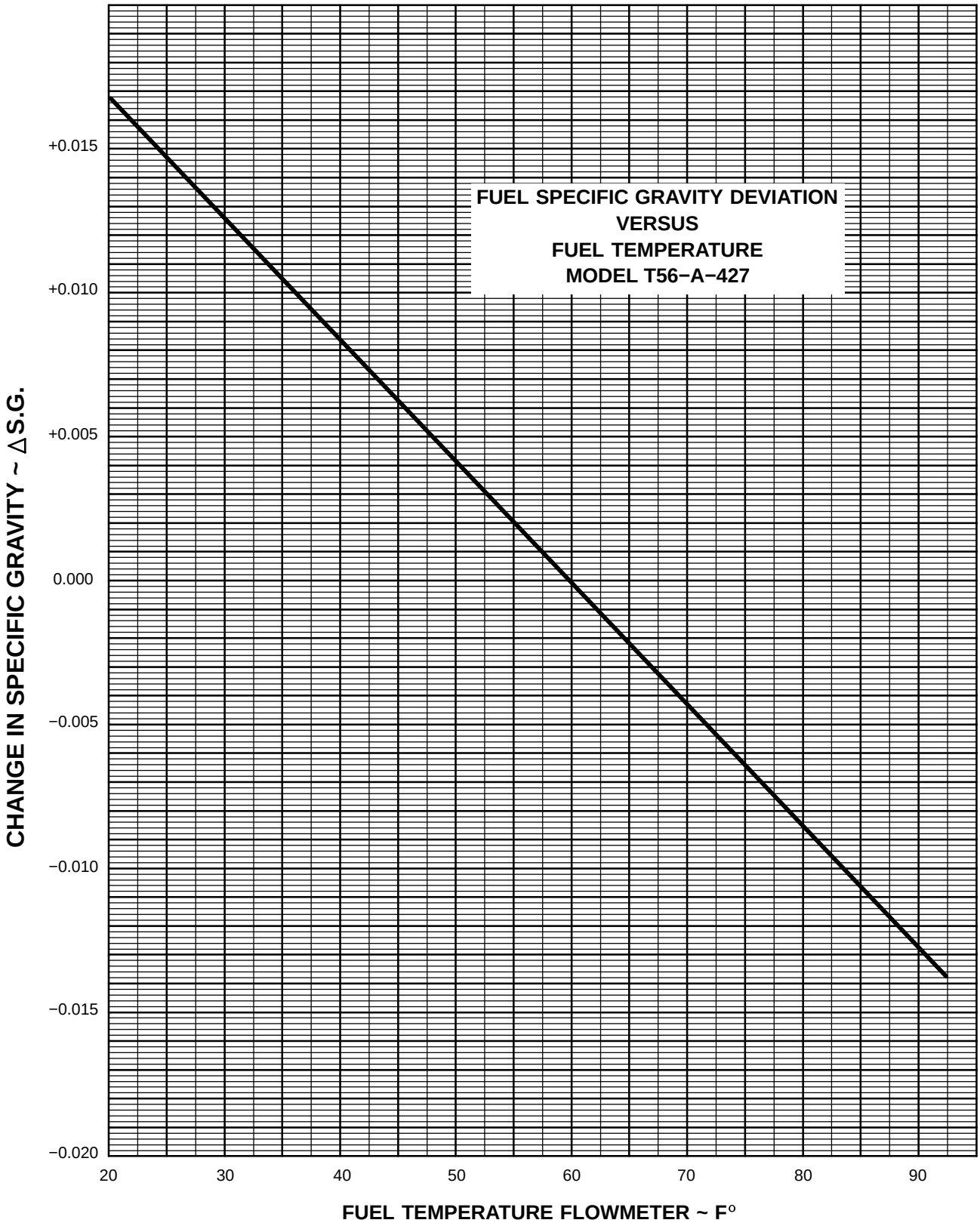

Figure 3. Fuel Specific Gravity Deviation Versus Fuel Temperature

MLSX082XA

e. The Sea Level, Standard Day, Unity Ram (Static) fuel flow is the algebraic sum of the value obtained in step d. and the fuel flow correction value ($\Delta Wf/\delta$) from step b.

66. Compensated Turbine Measured Temperature. The Compensated Turbine Measured Temperature as read from the DETC need not be corrected for this performance comparison method.

67. Plotting Horsepower and Fuel Flow. Plot the value obtained for corrected horsepower (paragraph 64 step f.) and the value obtained for corrected fuel flow (paragraph 65, step e.) versus the Compensated Turbine Measured Temperature on the Seal Level Calibration plots (figures 4 and 5) for each power setting.

a. Use a plotter to draw a first order least squares best fit line through fuel flow points and extend this line to include the range of compensated turbine measured temperatures from 800−1600°F (426.7 − 871.1°C).

b. Use a plotter to draw a second order least squares best fit line through the horsepower points. Extend this line to include range of compensated turbine measured temperatures from 800 − 1600°F (426.7 − 871.1°C).

68. Specific Fuel Consumption Correction.

a. Obtain values from the fuel flow line at CTMT's corresponding to horsepowers of 1398 (25% Max. Cont. Power), 2765 (50% Max. Cont. Power), 4123 (75% Max. Cont. Power) and 5318 (Max. Cont. Power), Divide fuel flow value for each power setting by horsepower value to obtain a corrected specific fuel consumption. Record these values on log sheet.

b. Compare values of specific fuel consumption at appropriate corrected horsepowers to the values found in table 10.

c. Obtain CTMT value from Figure 4 at a corrected horsepower of 5318 HP. Record this value on log sheet.

69. Requirements for Acceptable Engine.

a. Specific fuel consumption (SFC) values determined in paragraph 68, step a, shall be less than or equal to corresponding SFC limits shown in table 10.

b. TMHP SHP shall be greater than or equal to 5212 HP (98% of 5318 HP) with CTMT less than or equal to 1494 deg F.

70. Determination of Percent Variance From Required Depot Level Limits.

a. Using values obtained for specific fuel consumption in paragraph 68, step a., calculate variance from values found in table 10 for each power setting as follows:

% SFC Variance = SFC (para 68, step a.)

b. Using temperature value obtained in paragraph 68, step c., calculate the margin from compensated turbine measured temperature as follows:

Temperature Margin = CTMT (table 10) − CIT

c. Values, which are to be used for performance comparisons and the compensated turbine measured temperatures for the power settings at which the comparisons are to be made, are shown in table 10.

Table 10. Depot Level Performance Requirements

Engine Rating	Max CTMT °F (°C)	Min TMHP SHP	Max SFC lb./hp.−hr.
25% Max. Cont.	——	1398	0.812
50% Max. Cont.	——	2765	0.572
75% Max. Cont.	——	4123	0.499
Max. Cont.	1494 (812.3)	5318	0.472
Intermediate Maximum			

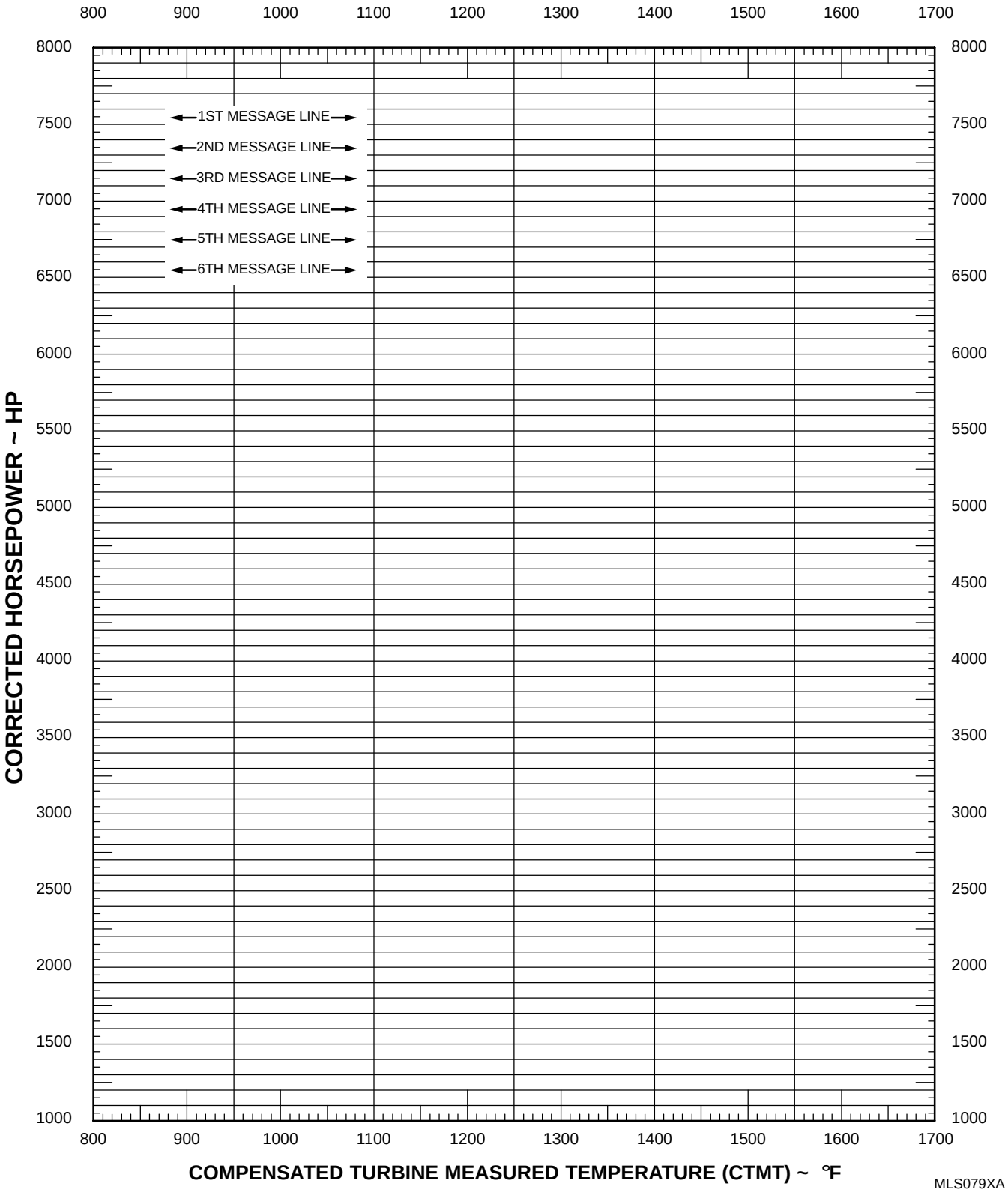

Figure 4. Corrected Horsepower Versus Compensated Turbine Measured Temperature

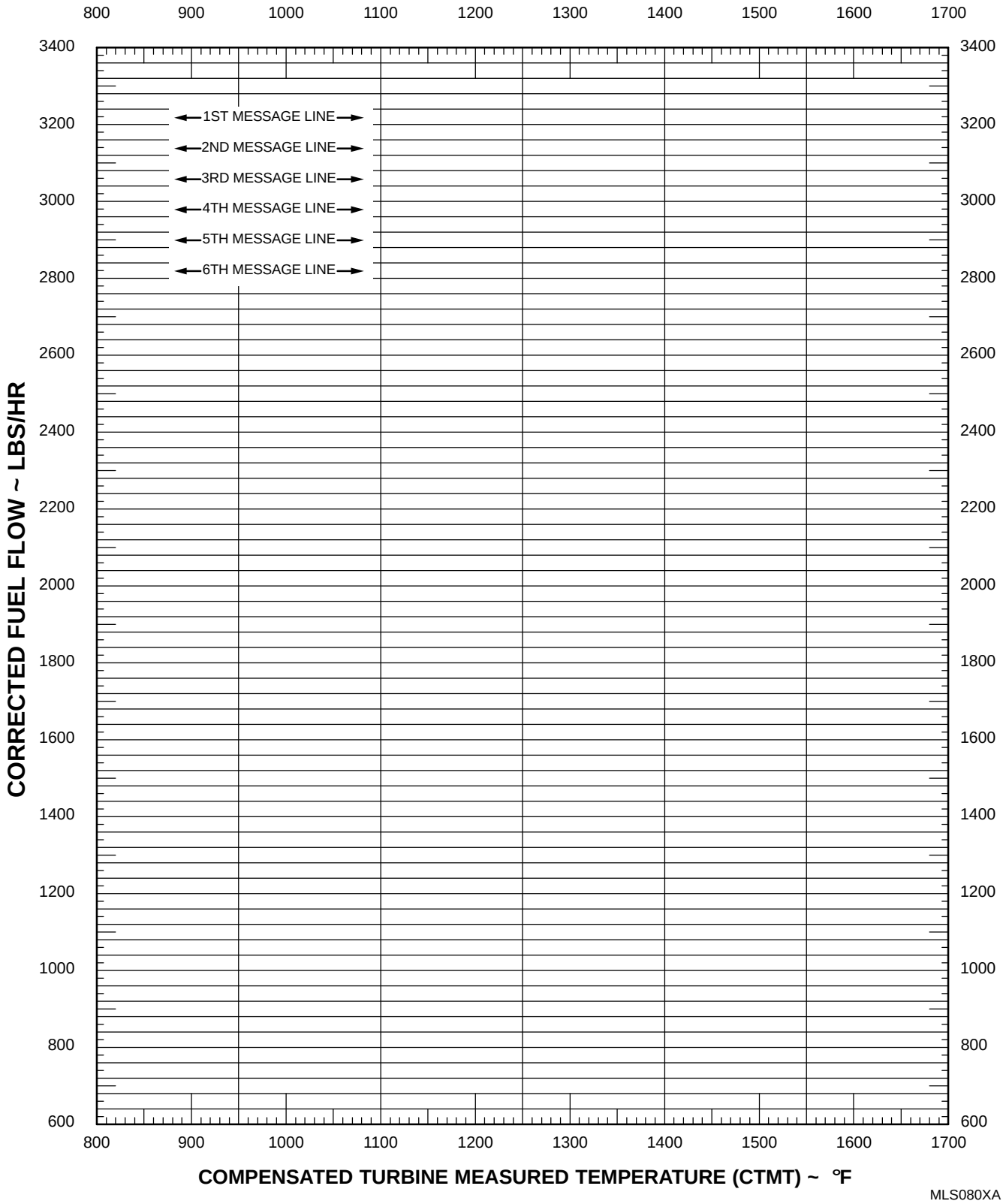

Figure 5. Corrected Fuel Flow Versus Compensated Turbine Measured Temperature

71. **ENGINE INSPECTION AFTER TEST.**

72. COMPRESSOR ROTOR BLADE−TO−COMPRESSOR CASE RUB.

NOTE

During engine shutdown blade rub (visual or audible) may vary from none to heavy.

a. Whenever compressor blade tip rub is detected on coastdown the following procedure will be used to determine if the engine is acceptable:

(1) Slight compressor drag when engine is hot is permissible.

(2) Audible blade tip rub is acceptable during coastdown.

(3) A slight scraping or brushing sound during rotation of the engine when cold is acceptable.

(4) The engine is unserviceable if blade tip rub has worn through the soft metal lining in the case and exposed any portion of parent metal.

73. LEAKAGE CHECKS.

NOTE

Vapor or oil mist, emanating from the diffuser vents during start−up and shutdown, is acceptable providing oil consumption limits are not exceeded. Oil leakage into the air inlet housing is not permitted.

a. Check fuel drain collections for limits as specified. Refer to paragraph 11, this WP.

b. Check engine breather outlet for excessive oil spewing.

c. Check engine fuel and oil lines and connections for leakage.

d. Check for air leakage at compressor case vertical and horizontal splitlines.

74. VISUAL INSPECTIONS.

a. Inspect electrical harness connector nuts for tightness and lockwire.

b. Inspect electrical harness for interference with other parts and security to clips.

c. Inspect fuel and oil filters for contamination.

d. Inspect magnetic plugs for metal particles.

e. Inspect engine air inlet and exhaust outlet for acceptable condition, If engine borescope inspection is necessary, refer to NAVAIR 02B−5DG−6−1, WP 023 00.

75. **ENGINE FUEL SYSTEM PRESERVATION AND REMOVAL FROM TEST CELL.**

Support Equipment Required

Part No./Type Designation	Nomenclature
6796784	Stand, engine overhaul
——	Wrench, torque (0−500 lb in.)

Materials Required

Specification No./Part No.	Nomenclature
AS3085−118	Packing, preformed (1)
MS20995C32	Lockwire (AR)
23039032−3	Gasket, aluminum − Paramite, annular (1)

a. Preserve engine fuel system after satisfactory acceptance test run. Use long term method (inactive beyond 30 days). Refer to NAVAIR 02B−5DG−6−1, WP 019 00.

NOTE

Draining oil from slave reduction gear assembly is not required.

b. Drain oil from power section (accessory drive housing) and reduction gear assembly as follows:

(1) Remove drain plugs. Remove and discard respective packing and gasket.

(2) Allow oil to drain for at least five minutes.

(3) Install packing on accessory drive housing plug. Install plug into housing assembly.

(4) Torque plug 240 − 300 lb in. and lockwire. (QA).

(5) Install gasket on reduction gear plug. Install plug into reduction gear assembly.

(6) Torque plug 240 − 300 lb in. and lockwire. (QA).

c. Disconnect all test cell interconnecting lines, electrical cables, and equipment from engine.

d. Remove engine from test cell and install in 6796784 engine overhaul stand.

DEPOT MAINTENANCE

REDUCTION GEAR ASSEMBLY TEST

Reference Material

Reduction Gear Assembly–Assembly . . . . . WP 033 00
Maintenance . . . . . NAVAIR 02B–5DG–6–1
Preparation for Service and Storage . . . . . WP 019 00
Reduction Gear Rear Housing Oil Seals–Replacement . . . . . WP 033 00
Propeller Shaft Oil Seal–Removal and Installation . . . . . WP 034 00
Propeller Shaft Plug–Removal and Installation . . . . . WP 035 00
Reduction Gear Housing Plugs and Pressure Relief Valve–Maintenance . . . . . WP 037 00
Reduction Gear Oil Pump–Maintenance . . . . . WP 070 00
Operation and Service Instructions – 6799094 Speed Decreaser Test Stand 37X2

Alphabetical Index

Subject **Page No.**

Introduction 2
Reduction Gear Assembly – Preparation for Storage 5
Reduction Gear Assembly – Propeller Shaft Axial Movement (End Play) Check 5
Reduction Gear Assembly – Removal From Test Stand 4
Reduction Gear Assembly – Test 2
Acceptance Test Limits 3
Acceptance Test Run 4
Inspection After Acceptance Test 4
Oil Leakage Limits 3
Preliminary Run 3
Preparation For Test 2
Service Connections 3

Record of Applicable Technical Directives

None

1. **INTRODUCTION.**

2. This work package (WP) provides the test procedures for test of the Reduction Gear Assembly (RGA) used on T56–A–427 turboprop engines.

3. The reduction gear assembly is tested as a separate assembly on a gear assembly speed decreaser test stand. When the reduction gear assembly test is accomplished as part of a complete engine test, the schedule and limits of this WP will apply.

4. **REDUCTION GEAR ASSEMBLY – TEST.**

5. REDUCTION GEAR ASSEMBLY – PREPARATION FOR TEST. This procedure provides the instructions for installing the reduction gear assembly into the 6799094 test stand assembly and includes installing the 4–106–0002 horizontal vibration transducer required to monitor vibrations during test.

Support Equipment Required

Part No./Type Designation	Nomenclature
1–003–150	Filter, 150 Hz
23032404	Spline, starter shaft turning
4–106–0002	Transducer (pickup), horizontal vibration
6796832	Stand, reduction gear, transportation and storage
6798160	Adapter, lifting, reduction gear assembly
6799094	Stand Assembly, test, speed decreaser gear assembly
——	Wrench, torque (0–500 lb in.)

NOTE

Operation and service instructions for the 6799094 speed decreaser test stand are provided in 37X2 manual.

Lubricating Oil, MIL–PRF–23699 **2**

a. Service 6799094 test stand assembly with MIL–PRF–23699 lubricating oil.

NOTE

Reduction gear assembly is received installed in 6796832 transportation and storage stand.

b. Remove reduction gear assembly from transportation and storage stand as follows:

(1) Install 6798160 lifting adapter on reduction gear assembly at 12:00 o'clock position.

(2) Open trunnion clamps and propeller shaft clamp of transportation and storage stand.

(3) Using a mobile hoist, lift reduction gear assembly clear of stand.

NOTE

6796832–17 trunnions may be left installed and used to mount reduction gear assembly in 6799094 test stand.

c. Install reduction gear assembly in 6799094 test stand making sure propeller shaft splines are aligned with test stand coupling splines before engagement. Use 23032404 starter shaft turning spline as necessary for spline alignment.

d. Close trunnion clamp caps and tighten hand knobs to secure installation in test stand.

e. Install horizontal vibration pickup as follows:

(1) Install 4–106–0002 pickup on adapter.

(2) Install the 150 Hz filter in vibration instrumentation circuit.

6. REDUCTION GEAR ASSEMBLY – SERVICE CONNECTIONS.

Support Equipment Required

Part No./Type Designation	Nomenclature
——	Wrench, torque (0–500 lb in.)

Materials Required

Specification No./Part No.	Nomenclature
AN763–16	Gasket (1)
AN763–24	Gasket (1)

a. Connect vibration instrumentation to test stand.

b. Connect test stand oil pump inlet line to inlet port of oil pump using AN763–24 gasket and self–locking nuts. Torque nuts 74–79 lb in. (QA).

c. Connect test stand oil pressure line to slave fitting in rear housing.

d. Connect test stand oil outlet (scavenge) pad on rear housing using AN763–16 gasket and 0.250–28 bolts. Torque bolts 70–75 lb in. (QA).

e. Connect test stand propeller brake oil inlet line to slave fitting in rear housing.

7. REDUCTION GEAR ASSEMBLY – ACCEPTANCE TEST LIMITS. The acceptance limits are applicable to reduction gear assemblies being tested separately or as a part of a complete engine.

a. Speed (rpm): 1100–1112 rpm (speed decreaser stand) or 13,820 ± 70 rpm (engine test cell).

b. Oil Inlet Pressure: Maintain 1–6 psig.

c. Main Oil Pressure: 170–220 psig.

d. Scavenge Oil Pressure: 70–75 psig, adjust oil system valve on test stand to maintain this pressure.

e. Oil–In Temperature: 140–185°F (60–85°C).

f. Scavenge Oil Temperature: 175–215°F (79–102°C).

g. Oil Flow: 125–140 pounds per minute.

h. Vibration: 3 mils max during stabilized running.

8. REDUCTION GEAR ASSEMBLY – OIL LEAKAGE LIMITS. No oil leakage acceptable at splitlines. Refer to following table for oil leakage at shaft oil seals:

Seal Location	Max Limits
Tach gen pads (2)	2 cc/hr
Hydraulic pads (2)	2 cc/hr
Alternator pad	2 cc/hr
Starter pad	2 cc/hr
Propeller shaft	none
NTS plunger	2 cc/hr

9. REDUCTION GEAR ASSEMBLY – PRELIMINARY RUN. Perform preliminary run before acceptance test run.

a. Release propeller brake. Apply 100 psig minimum booster oil pressure to propeller brake for 20 seconds before starting stand driving motor.

b. Start driving motor and turn off booster pump.

c. Adjust oil–in temperature to 175–185°F (79–85°C).

d. Adjust scavenge oil pressure to 70–75 psig.

e. Observe test limits (paragraph 7, this WP) and record following data after stabilizing stand speed at 1100–1112 rpm (speed decreaser stand) or 14,169–14,309 rpm (engine test cell).

(1) Oil Inlet Pressure: 4.0–4.5 psig

(2) Main Oil Pressure: 175–220 psig

(3) Scavenge Oil Pressure: 75–80 psig

(4) Oil–In Temperature: 140–185°F (60–85°C).

(5) Scavenge Oil Temperature: 175–215°F (79–102°C).

(6) Oil Flow:
above ground idle: 175 pounds per minute
below ground idle: 171 pounds per minute

(7) Vibration: 2 mils

f. Shutdown stand and inspect reduction gear assembly for oil leakage at splitlines, accessory drive shafts, and propeller shaft oil seal. Replace seals as necessary.

(1) Replace accessory drive shaft oil seals. Refer to NAVAIR 02B–5DG–6–1, WP 033 00.

(2) Replace propeller shaft oil seal. Refer to NAVAIR 02B−5DG−6−1, WP 034 00.

g. Remove magnetic drain plug and gasket. Inspect for metal particles and foreign material. Reinstall plug and old gasket. Refer to NAVAIR 02B−DG−6−1, WP 037 00.

10. REDUCTION GEAR ASSEMBLY − ACCEPTANCE TEST RUN.

Support Equipment Required

Part No./Type Designation	Nomenclature
23032404	Spline, starter shaft turning

a. Test Time: Ten minutes minimum at stabilized speed.

b. Speed: 1100−1112 rpm (speed decreaser stand) or 14,169−14,309 rpm (engine test cell).

c. Observe test limits (paragraph 7, this WP) and record following data:

(1) Speed: rpm

(2) Oil Inlet Pressure: psig

(3) Main Oil Pressure: psig

(4) Scavenge Oil Pressure: psig

(5) Oil−In Temperature: °F

(6) Scavenge Oil Temperature: °F

(7) Oil Flow: pounds per minute

(8) Vibration: mils

d. Propeller brake assembly check.

(1) During coastdown, note whether brake engages by observing characteristics of test rig and reduction gear assembly.

(2) After removing coupling assembly, note whether brake assembly can be locked by reverse rotation of propeller shaft.

(3) Acceptable brake assembly will engage on coastdown and will lock up when propeller shaft is rotated in reverse rotation direction.

(4) To be sure brake assembly is not frozen, rotate reduction gear assembly in normal direction of rotation using 23032404 starter shaft turning spline.

11. REDUCTION GEAR ASSEMBLY− INSPECTION AFTER ACCEPTANCE TEST.

a. Remove magnetic drain plug and inspect for metal particles and foreign material. Clean and reinstall plug. Refer to NAVAIR 02B−5DG−6−1, WP 037 00.

b. Remove scavenge oil screen and inspect for metal particles and foreign material. Clean and reinstall screen. Refer to NAVAIR 02B−5DG−6−1, WP 037 00.

c. Remove reduction gear oil pump filter assembly and inspect for metal particles and foreign material. Clean and reinstall filter assembly. Refer to NAVAIR 02B−5DG−6−1, WP 070 00.

d. Inspect accessory drive shaft oil seals for leakage. Refer to paragraph 8, this WP for leakage limits. For replacement, refer to NAVAIR 02B−5DG−6−1, WP 033 00.

e. Inspect propeller shaft oil seal for leakage. No leakage acceptable. For replacement, refer to NAVAIR 02B−5DG−6−1, WP 034 00.

f. Inspect propeller shaft plug for oil leakage. No leakage acceptable. For replacement, refer to NAVAIR 02B−5DG−6−1, WP 035 00.

g. Inspect splitlines at main diaphragm assembly for oil leakage. No leakage acceptable.

12. **REDUCTION GEAR ASSEMBLY − REMOVAL FROM TEST STAND.**

Support Equipment Required

Part No./Type Designation	Nomenclature
1−003−150	Filter, 150 Hz
4−106−0002	Transducer (pickup), horizontal vibration
6796832	Stand, reduction gear transportation and storage
6798160	Adapter, lifting, reduction gear assembly

a. Disconnect vibration instrumentation circuit.

b. Remove 4−106−0002 transducer.

c. Disconnect oil lines.

d. If not in place, install 6798160 lifting adapter at 12:00 o'clock position.

e. Using mobile hoist, remove the reduction gear assembly from test stand.

NOTE

Do not remove 6796832−17 trunnions from reduction gear assembly.

f. Install reduction gear assembly in 6796832 transportation and storage stand.

13. **REDUCTION GEAR ASSEMBLY − PROPELLER SHAFT AXIAL MOVEMENT.**

a. Perform propeller shaft end play check. Refer to WP 033 00.

14. **REDUCTION GEAR ASSEMBLY − PREPARATION FOR STORAGE.**

a. Preserve reduction gear assembly. Refer to NAVAIR 02B−5DG−6−1, WP 019 00.

b. Install reduction gear assembly into shipping container. Refer to NAVAIR 02B−5DG−6−1, WP 019 00.

DEPOT MAINTENANCE

ENGINE DISASSEMBLY

SYSTEM COMPONENTS REMOVAL

Reference Material

Intermediate Maintenance Manual . . . . . NAVAIR 02B−5DG−6−1
Tubing, Cabling, and Clamping Manual . . . . . NAVAIR 02B−5DG−6−1−1

Alphabetical Index

Subject **Page No.**

Introduction 2
System Components Removal 2

Record of Applicable Technical Directives

None

1. **INTRODUCTION.**

2. This work package (WP) provides a reference to the NAVAIR 02B−5DG−6−1 for removal of all system components.

3. **SYSTEM COMPONENTS REMOVAL.**

a. After the removing external clamping, cabling, and tubing using NAVAIR 02B−5DG−6−1−1 as a guide, remove the components listed in Table 1 in any convenient order. Refer to the specified work package in NAVAIR 02B−5DG−6−1 for detailed instructions.

Table 1. System Component Removal References

Nomenclature	Work Package Reference
Air Bleed Valve	WP 089 00
Anti−icing Air Valve	WP 092 00
Anti−icing Solenoid Valve	WP 091 00
Burner Drain Valves	WP 068 00
Compressor Air Bleed Filter	WP 090 00
Differential Pressure Indicator	WP 062 00
Dual Element Fuel Pump	WP 058 00
Fuel Control	WP 064 00
Fuel Manifold Drain Solenoid Valve	WP 066 00
Fuel Nozzles	WP 067 00
High Pressure Fuel Filter	WP 059 00
Ignition Exciter	WP 082 00
Ignition Relay	WP 084 00
Low Pressure Filters and Elements	WP 061 00
Paralleling Valve	WP 060 00
Power Section Magnetic Drain Plug	WP 073 00
Power Section Main Pressure and Scavenge Oil Pump	WP 075 00
Power Section Oil Filter	WP 077 00
Power Section Pressure Regulating Valve	WP 076 00
Power Section External Scavenge Oil Pump	WP 078 00
Pressure Switch	WP 063 00
Reduction Gear External Pressure Relief Valve	WP 074 00
Reduction Gear Magnetic Plug	WP 072 00
Reduction Gear Oil Filter	WP 071 00
Reduction Gear Oil Pump	WP 070 00
Reduction Gear Prop Feather Solenoid	WP 079 00
Reduction Gear Scavenge Oil Screen	WP 072 00
Spark Igniters	WP 085 00
Speed Sensitive Valve	WP 088 00
Thermocouples	WP 083 00
Thrust Sensitive Signal (TSS) System Actuator	WP 036 00
Thrust Sensitive Switch	WP 080 00

DEPOT MAINTENANCE

ENGINE ASSEMBLY

SYSTEM COMPONENTS INSTALLATION

Reference Material

Intermediate Maintenance Manual . . . . . NAVAIR 02B−5DG−6−1
Tubing, Cabling, and Clamping Manual . . . . . NAVAIR 02B−5DG−6−1−1

Alphabetical Index

Subject **Page No.**

Introduction 2
System Components Removal 2

Record of Applicable Technical Directives

None

1. **INTRODUCTION.**

2. This work package (WP) provides a reference to NAVAIR 02B−5DG−6−1 for installation of all system components.

3. **SYSTEM COMPONENTS INSTALLATION.**

a. All torques listed in table 1 are lb in. unless otherwise specified.

b. Install the components listed in table 1 in any convenient order. Refer to the specified work packages in NAVAIR 02B−5DG−6−1 for detailed instructions. Install external clamping, cabling, and tubing using NAVAIR 02B−5DG−6−1−1.

Table 1. System Component Installation Information

Nomenclature	Work Package Reference	Attaching Parts/ Installation Torque
Air Bleed Valve	WP 089 00	70−85
Anti−icing Air Valve	WP 092 00	40−60
Anti−icing Solenoid Valve	WP 091 00	70−85 (Bolts) 74−89 (Nuts)
Burner Drain Valves	WP 068 00	70−85
Compressor Air Bleed Filter	WP 090 00	25−30 lb ft.
Differential Pressure Indicator	WP 062 00	22−26
Dual Element Fuel Pump	WP 058 00	140−170
Fuel Control	WP 064 00	70−85 (Clamp Nut) 160−195 (Nuts)
Fuel Manifold Drain Solenoid Valve	WP 066 00	70−85
Fuel Nozzles	WP 067 00	70−85
High Pressure Fuel Filter	WP 059 00	70−85
Ignition Exciter	WP 082 00	74−89
Ignition Relay	WP 084 00	74−89
Low Pressure Filters and Elements	WP 061 00	200−225
Paralleling Valve	WP 060 00	15, tighten alternately 5 lb in. increments
Power Section Magnetic Drain Piug	WP 073 00	240−300
Power Section Main Pressure and Scavenge Oil Pump	WP 075 00	74−89
Power Section Oil Filter	WP 077 00	74−89
Power Section Pressure Regulating Valve	WP 076 00	180−220
Power Section External Scavenge Oil Pump	WP 078 00	140−170
Pressure Switch	WP 063 00	80−120
Reduction Gear External Pressure Relief Valve	WP 074 00	140−160

Table 1. System Component Installation Information (contd)

Nomenclature	Work Package Reference	Attaching Parts/ Installation Torque
Reduction Gear Magnetic Plug	WP 072 00	240−300
Reduction Gear Oil Filter	WP 071 00	74−89
Reduction Gear Oil Pump	WP 070 00	74−89
Reduction Gear Prop Feather Solenoid	WP 079 00	15−18
Reduction Gear Scavenge Oil Screen	WP 072 00	Fingertight
Spark Igniters	WP 085 00	70−85
Speed Sensitive Valve	WP 088 00	74−89
Thermocouples	WP 083 00	40−60
Thrust Sensitive Signal (TSS) System Actuator	WP 036 00	70−85
Thrust Sensitive Switch	WP 080 00	20−30

DEPOT MAINTENANCE

DISASSEMBLY

COMPRESSOR ROTOR ASSEMBLY

Reference Material

None

Alphabetical Index

Subject **Page No.**

Compressor Rotor Assembly 2
Disassembly 2
Introduction 2

Record of Applicable Technical Directives

None

1. **INTRODUCTION.**

2. This work package provides the instructions for disassembly of the compressor rotor assembly used on the T56−A−427 turboprop engine.

3. **COMPRESSOR ROTOR ASSEMBLY.**

4. COMPRESSOR ROTOR ASSEMBLY – DISASSEMBLY.

Support Equipment Required

Part No./Type Designation	Nomenclature
23037914	Separator, compressor rotor wheel assembly (Stages 7 − 9 and 11 − 13)
23037915	Separator, compressor rotor wheel assembly (Stages 5 and 6)
23037916	Separator, compressor rotor wheel assembly (Stage 10)
23037917	Separator, compressor rotor wheel assembly (Stages 1−4)
3482	Holder, compressor rotor forward spline
6796236	Puller, tee handle (10−32 threads)
6796833	Stand, transportation and storage
6796872	Fixture, compressor rotor disassembly and assembly
6796894	Protector, first stage hub
6796895	Bar, first stage blade retainer pry

Materials Required

Specification No./Part No.	Nomenclature
A−A−50493	Oil, penetrating

a. Attach lift to first stage wheel (6, figure 1) and remove rotor from 6796833 transportation and turnover stand (figure 2). Position rotor on 6796872 assembly and disassembly fixture (figure 3) with first stage wheel up.

b. Remove retaining ring (1, figure 1) from tie bolt nut lock (2).

c. Install two 6796236 tee handle pullers (figure 4) in tie bolt nut lock. Remove tie bolt lock nut.

d. Install 3482 forward spline holder (figure 5). Using a 1 1/8 in., thin−wall socket wrench, remove tie bolt (3, figure 1).

e. Remove preformed packings (4 and 5) from tie bolt.

f. Remove first stage blade retainer (11) with the aid of 6796894 hub protector and 6796895 retainer pry bar (figure 6). Discard blade retainer.

g. Remove first stage blades (12, figure 1) and balance weights (13) from the wheel.

Penetrating Oil A−A−50493 **51**

h. Apply A−A−50493 penetrating oil between each compressor wheel assembly.

CAUTION

If second through fourteenth stage wheel assembly blades are not removed before wheel assembly is removed, secure blades with tape. Otherwise, blades may fall out and be damaged.

Before separating each wheel disassembly, place the tie bolt back through the center of the compressor. This will keep the compressor wheel assemblies from popping off and being damaged.

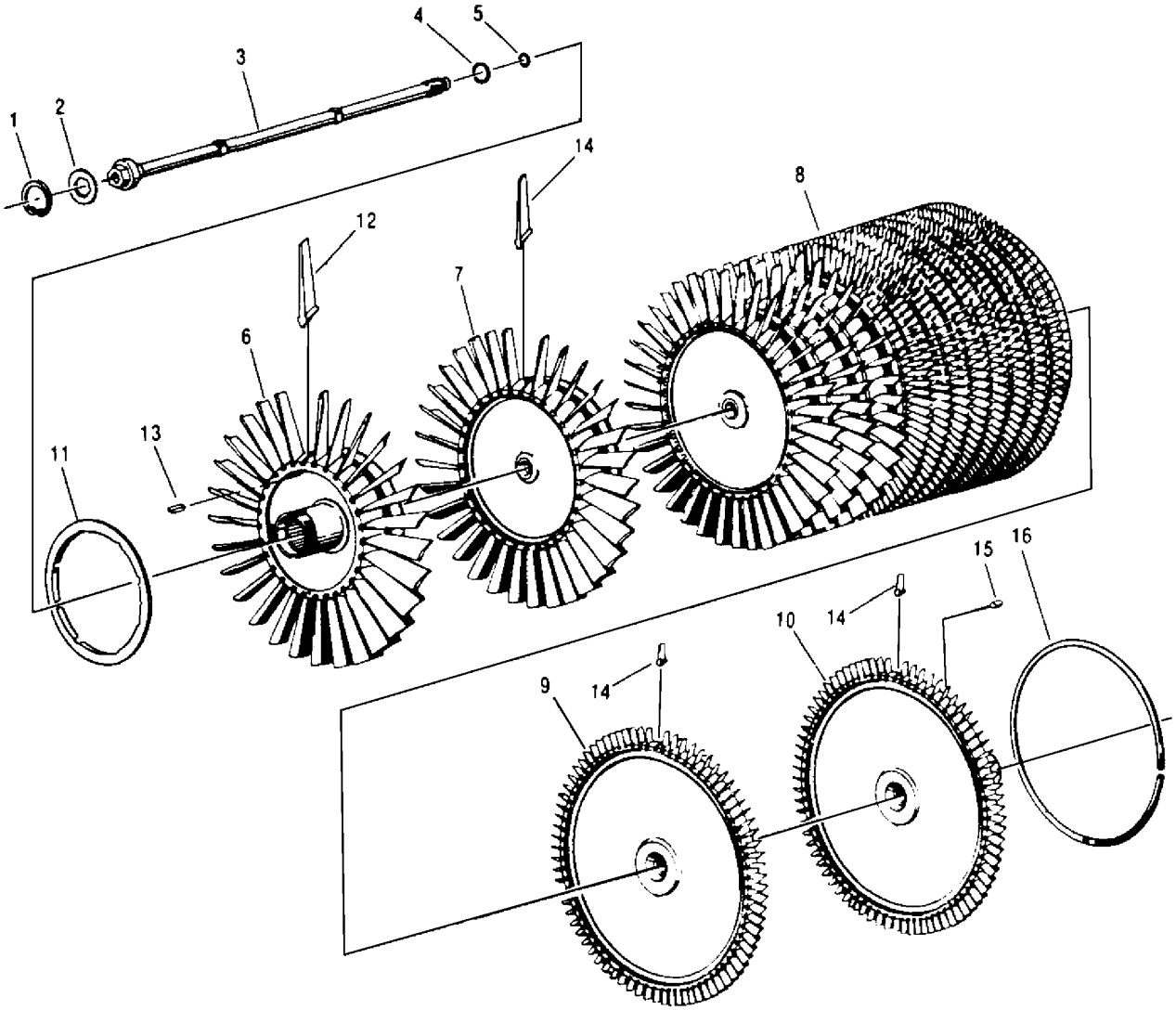

1. Retaining Ring
2. Tie Bolt Nut Lock
3. Tie Bolt
4. Preformed Packing
5. Preformed Packing
6. First−Stage Wheel
7. Second−Stage Wheel
8. Compressor Rotor (Stages Three thru Twelve)
9. Thirteenth−Stage Wheel
10. Fourteenth−Stage Wheel
11. First−Stage Blade Retainer
12. First−Stage Blade
13. Balance Weight
14. Second thru Fourteenth Stage Blades
15. Pin
16. Balance Ring

Figure 1. Compressor Rotor Assembly

i. Separate wheel assemblies, as follows, by placing separating tools equally spaced around wheel assembly. Be sure each tool does not contact knife seals or blade retainer lip.

(1) Separate wheel assemblies 1 through 4 using 23037917 wheel separator. Remove 23037917−15 plate for fourth−stage.

(2) Separate wheel assemblies 5 and 6 using 23037915 wheel separator. Remove 23037915−15 plate for sixth−stage.

(3) Separate wheel assemblies 7 through 9 using 23037914 wheel separator.

(4) Separate wheel assembly 10 using 23037916 wheel separator.

(5) Separate wheel assemblies 11 through 13 using 23037914 wheel separator.

j. If blades were not previously removed, remove blades from each wheel assembly.

k. If necessary, remove pins (15) and balance ring (16).

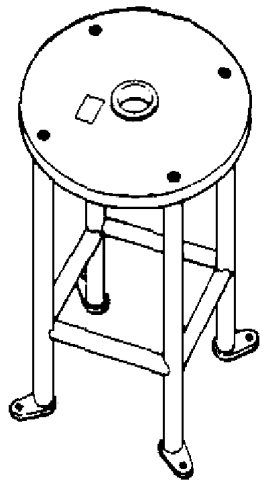

ZZT120AH

Figure 3. 6796872 Compressor Rotor Disassembly and Assembly Fixture

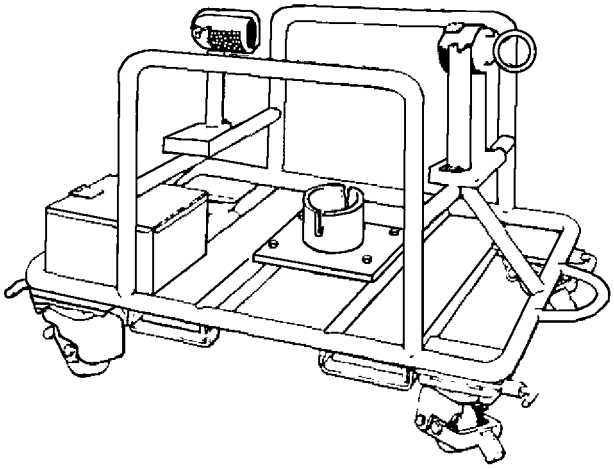

ZZT035XH

Figure 2. 6796833 Compressor Rotor Transportation and Storage Stand

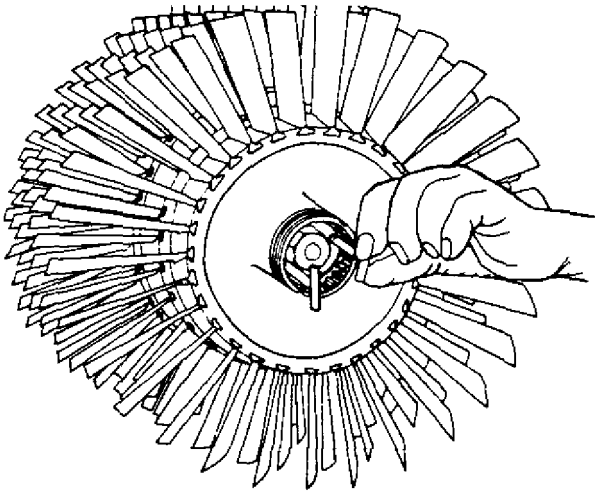

MKC007XH

Figure 4. Removing Compressor Wheel tie Bolt Nut Lock with Tee Handle Puller

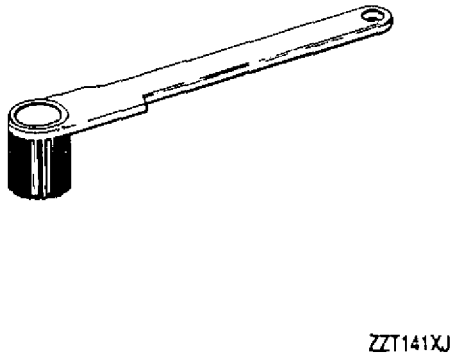

Figure 5. 3482 Compressor Rotor Forward Spline Holder

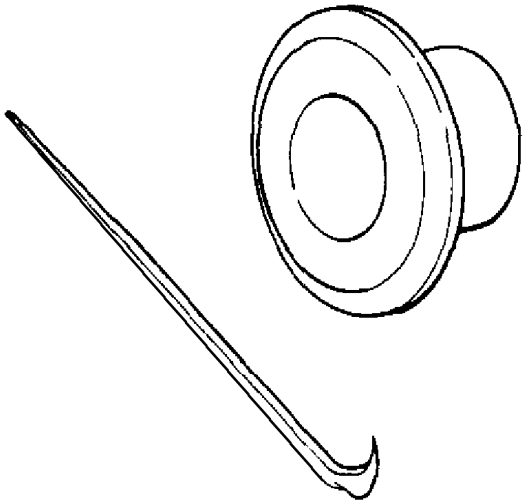

Figure 6. 6796894 First−Stage Hub Protector and 6796895 First−Stage Blade Retainer Pry Bar

DEPOT MAINTENANCE

ASSEMBLY AND BALANCING

COMPRESSOR ROTOR ASSEMBLY

Reference Material

Compressor Rotor Assembly − Disassembly . . . . . WP 025 00
Identification Marking Methods . . . . . AS 478

Alphabetical Index

Subject **Page No.**

Compressor Rotor Assembly 2
Assembly 6
Blade Identification 2
Blade Installation 2
Dynamic Balancing 14
Final Grinding 13
Inspection 11
Wheel Assembly Static Balance 4
Introduction 2

Record of Applicable Technical Directives

None

1. **INTRODUCTION.**

2. This work package (WP) provides the instructions for assembly and balancing of the compressor rotor assembly used in the T56−A−427 turboprop engine.

3. **COMPRESSOR ROTOR ASSEMBLY.**

4. COMPRESSOR ROTOR ASSEMBLY − BLADE IDENTIFICATION.

a. Marking or letter preceding last three digits of part number located on base of dovetail identifies vendor (manufacturer) (figure 1).

b. Last number of three digits located on base of dovetail identifies compressor stage.

5. COMPRESSOR ROTOR ASSEMBLY − BLADE INSTALLATION.

NOTE

All parts must be clean and free of foreign material.

Use tape or rubber tip rings to retain blades during handling and installation. First−stage blades are retained with a blade retainer after rotor assembly. Blade retainer is to be installed after dynamic balance of entire compressor rotor assembly. Second− through fourteenth stage blades are each retained by the wheel of the adjacent stage.

a. Weigh all blades from each wheel separately within 0.1 grams and mark weight on blade using any approved marker. Arrange blades in order according to weight (heaviest to lightest). Each consecutive pair of blades will be installed 180° apart.

b. Insert the appropriate blades (8, figure 2) in the wheel slots of all stages, using heavy−light blade selection process shown in figure 3. For example, at position A, install the heaviest blade. At position B, install the next heaviest blade. At position Z, install the lightest blade and at position Y, install the next lightest blade. Continue until all blades are installed.

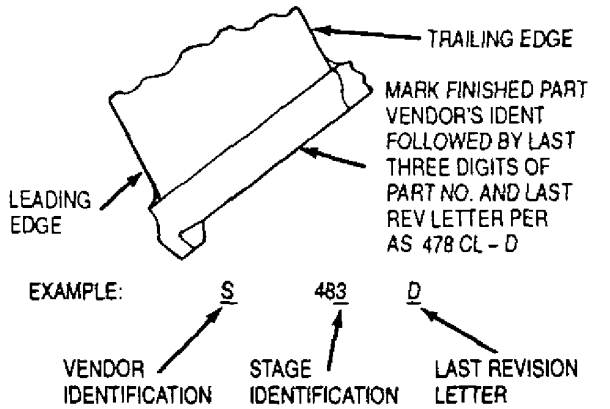

MARKING	VENDOR	MATERIAL	COMMENTS
E	EXCELLO	INCONEL 718	
X	EXCELLO	INCONEL 718	
S	EXCELLO	17 – 4PH	
U	UTICA	INCONEL 718	
U	UTICA	17 – 4PH	

MLC097XG

Figure 1. Compressor Blade Identification

c. The blades must be inserted by hand without driving. Retain first−stage blades with a slave retaining ring.

d. Check for correct looseness of blades by measuring blade tip movement in a plane perpendicular to wheel dovetail slot. Minimum looseness of each blade shall be as specified in table 1.

Table 1. Compressor Wheel Assembly Blade Looseness

Stage	Min Tip Movement	Stage	Min Tip Movement
1	0.025 in.	8	0.011 in.
2	0.020 in.	9	0.010 in.
3	0.015 in.	10	0.009 in.
4	0.015 in.	11	0.008 in.
5	0.013 in.	12	0.008 in.
6	0.013 in.	13	0.008 in.
7	0.012 in.	14	0.008 in.

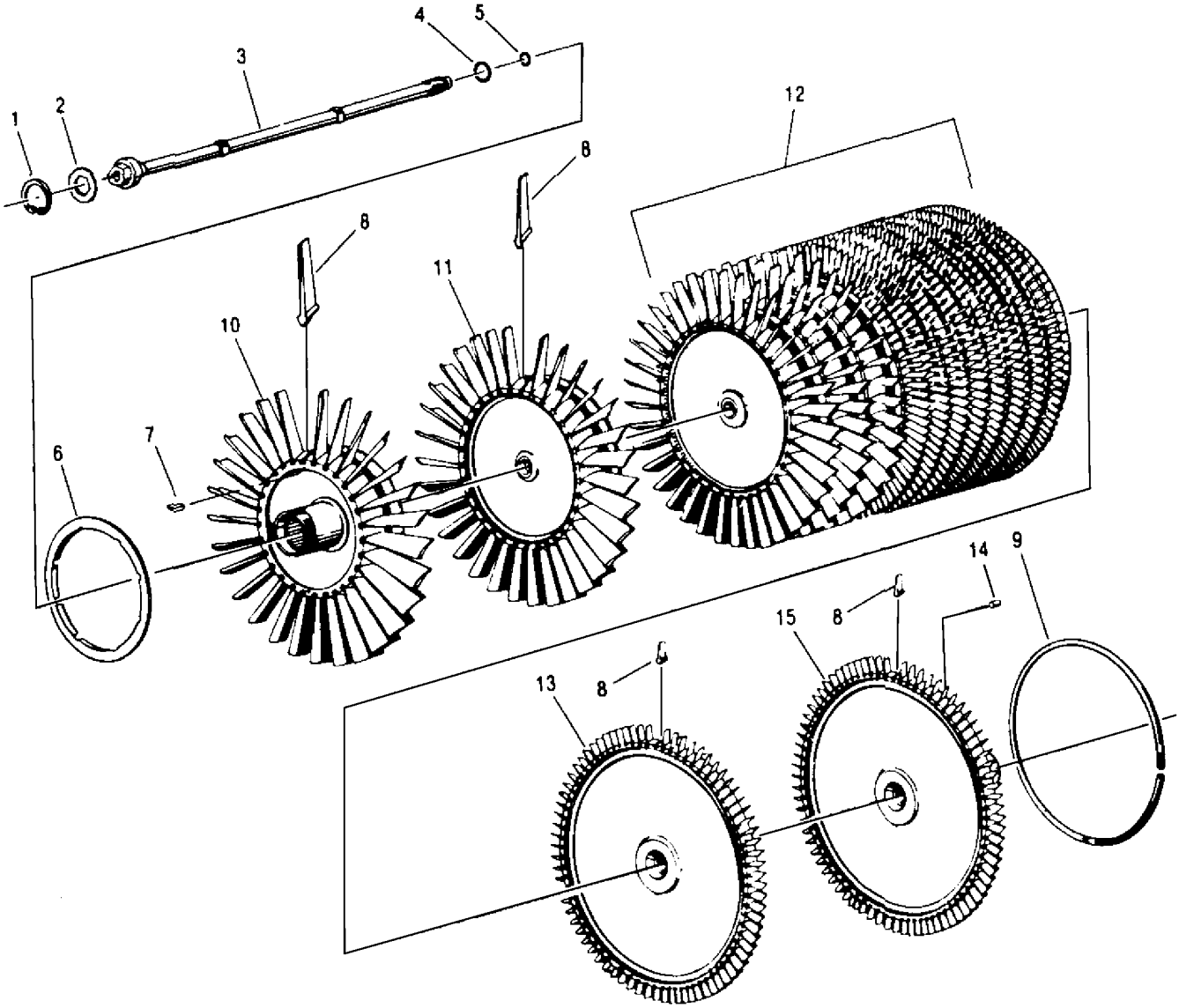

1. Retaining Ring
2. Tie Bolt Lock Nut
3. Tie Bolt
4. O−ring Seal
5. O−ring Seal
6. Compressor Blade Retainer
7. Balance Weight
8. Compressor Rotor Blade
9. Balance Weight Stock
10. First−Stage Wheel
11. Second−Stage Wheel
12. Compressor Rotor Assembly (Stages Three Through Twelve)
13. Thirteenth−Stage Wheel
14. Pin
15. Fourteenth−Stage Wheel

Figure 2. Compressor Rotor Assembly

Table 2. Compressor Wheel and Rotor Assembly Blade Tip Minimum Average Radius Limits for Used Blades

Stage	Min Avg Tip Radius	Stage	Min Avg Tip Radius
1	7.4732 in.	8	7.2806 in.
2	7.4388 in.	9	7.2649 in.
3	7.4065 in.	10	7.2649 in.
4	7.3755 in.	11	7.2649 in.
5	7.3496 in.	12	7.2649 in.
6	7.3215 in.	13	7.2649 in.
7	7.3002 in.	14	7.2649 in.

Note: Individual used blade tip radius can be up to 0.004 in. less than min avg tip radius.

e. If all used blades were re−installed in wheel assembly (no new blades installed) and met minimum radius requirements specified in table 2, grinding of wheel assembly blade tips (paragraph 6, this WP) is not required. Wheel assemblies in which any non−used blades were installed now require blade tip grinding per paragraph 6, this WP.

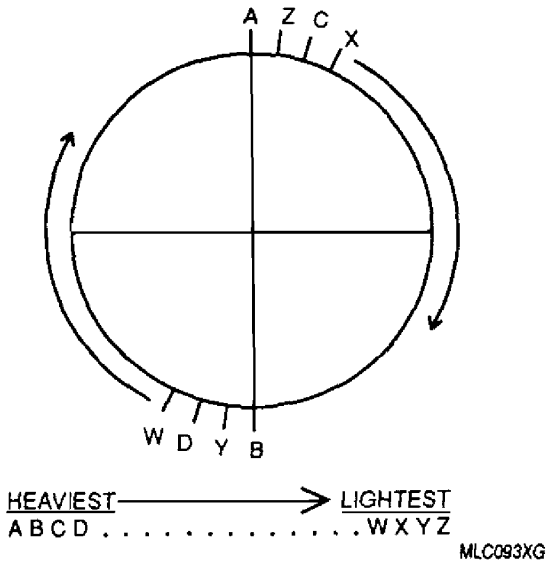

Figure 3. Compressor Blade Installation

6. COMPRESSOR ROTOR ASSEMBLY − WHEEL ASSEMBLY STATIC BALANCE.

Support Equipment Required

Part No./Type Designation	Nomenclature
6796797	Machine, balance, vertical rotating static
6796800	Adapter, dial, compressor wheel static balance
6796801	Adapter, support, compressor wheel static balance
6796804	Adapter, collet, static (second through thirteenth−stages)
23037944	Fixture, balance, compressor rotor assy static

NOTE

Compressor rotor individual wheel assemblies (stages two through thirteen) (11, 12, and 13, figure 2) shall be statically balanced on 6796797 rotating balance machine (figure 4), using 6796800 static balance dial adapter (figure 5), 6796801 balance support adapter (figure 6), 6796804 collet adapter (figure 7), and 23037944 balance fixture, rotor (figure 8).

When interchanging blades during static balance, switch new blades with new blades and used blades with used blades, but not new blades with used blades.

a. Balance by selective positioning or shifting blades by weight. Wheel assembly unbalance must not exceed 0.22 oz in.

b. Final check the balance of the wheel. Locate the balance acceptance stamp marking at the heavy point on the assembly and remove the old markings.

c. Mark new heavy point (a line within 30° of heavy point) on front face of blade retaining flange per AS 478, method 30 with any approved non−acid ink marker. Mark at any point if no unbalance is indicated.

d. After static balance of all wheel assemblies is complete, compressor rotor can be assembled. Refer to paragraph 7, this WP.

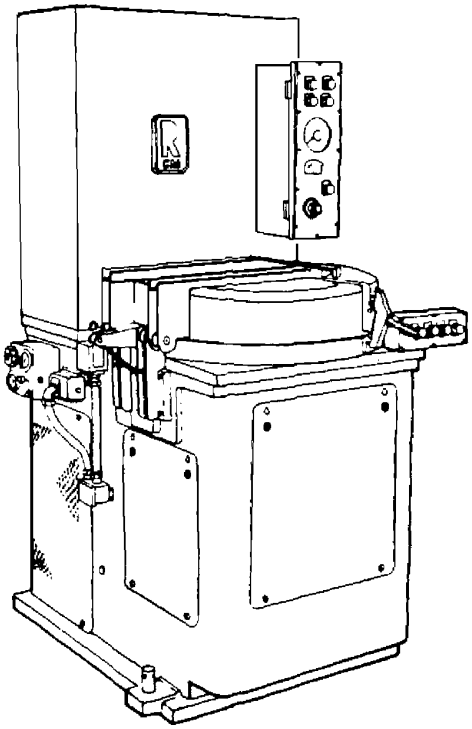

ZZT324XH

Figure 4. 6796797 Vertical Rotating Static Balance Machine

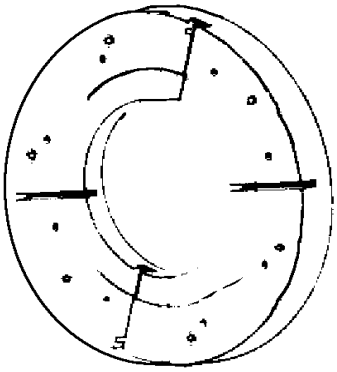

ZZT325XH

Figure 6. 6796801 Compressor Wheel Static Balance Support Adapter

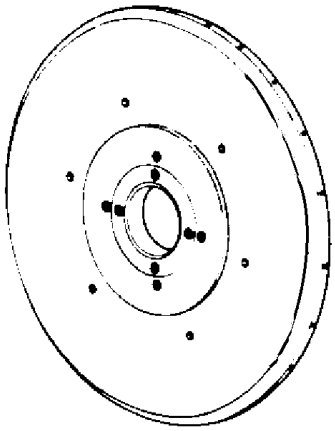

ZZT331XH

Figure 5. 6796800 Compressor Wheel Static Balance Dial Adapter

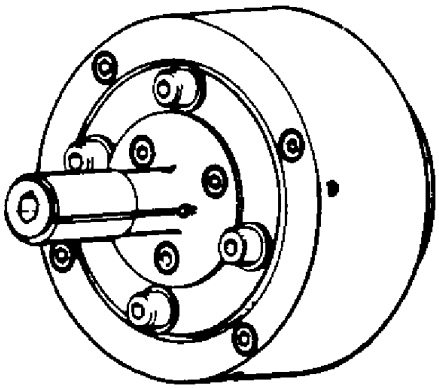

ZZT457XH

Figure 7. 6796804 Compressor Second Through Thirteenth−stage Static Collet Adapter

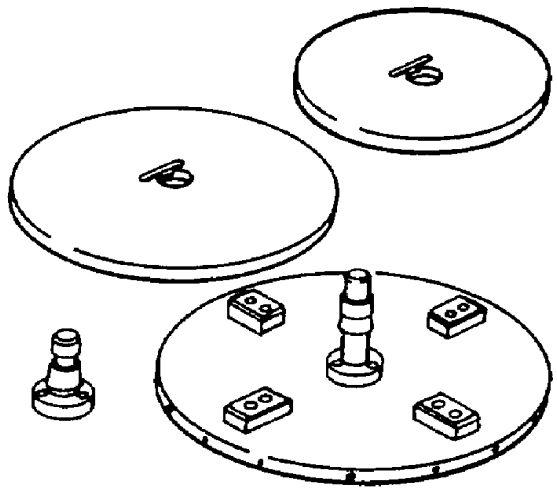

Figure 8. 23037944 Compressor Rotor Assy Static Balance Fixture

7. COMPRESSOR ROTOR ASSEMBLY − ASSEMBLY.

Support Equipment Required

Part No./Type Designation	Nomenclature
3482	Holder, compressor rotor forward spline
6796247	Gage, fourteenth−stage compressor wheel permanent dish
6796833	Stand, compressor rotor transportation and storage
6796872	Fixture, compressor rotor assembly and disassembly
6796886	Cover, compressor rotor
6796898	Press, 20 ton capacity hydraulic
6796899	Adapter, compressor rotor first−stage end press
23038099	Adapter, compressor rotor fourteenth−stage end press
6897884	Heater, air, compressor rotor wheel assembly

Materials Required

Specification No./Part No.	Nomenclature
Molykote 321	Lubricant, dry film (CAGE 96717)
——	Gloves, insulated

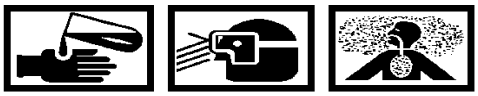

Dry Film Lubricant Molykote 321 **67**

a. Lubricate internal splines of each wheel assembly with a uniform thin single pass coating of Molykote 321 dry film lubricant. Do not apply lubricant to face of wheel.

b. Place fourteenth−stage wheel assembly (15, figure 2) in 6796872 assembly fixture, wheel hub down (figure 9).

WARNING

Heated parts will cause skin damage (burns). Use clean insulated gloves to handle parts.

CAUTION

Do not exceed 600°F (316°C) when heating compressor fourteenth−stage wheel assembly.

NOTE

When assembling compressor rotor, position the static balance marks on each adjacent wheel assembly 180° apart (except first−stage to second−stage).

When the original wheel assemblies are being assembled (no replacement, rework, or rebalancing of any wheels or blades), assemble with original index marks aligned.

c. Heat the fourteenth−stage wheel assembly to 600°F (316°C) (approximately 20 − 30 minutes) by installing 6897884 air heater (figure 10) on front side of wheel.

d. Remove heater and stack the thirteenth−stage wheel assembly onto fourteenth−stage. Ensure external splines are mated. Tap lightly to seat splines and check blades for proper seating.

e. Heat the thirteenth−stage wheel assembly to 400°F (204°C) (approximately five minutes) by installing 6897884 air heater on front side of wheel.

f. Remove heater and stack the twelfth−stage wheel assembly onto thirteenth−stage. Ensure external splines are mated. Tap lightly to seat splines and check blades for proper seating.

g. Heat the twelfth−stage wheel assembly to 400°F (204°C) (approximately five minutes) by installing 6897884 air heater on front side of wheel.

h. Remove heater and stack the eleventh−stage wheel assembly onto twelfth−stage. Ensure external splines are mated. Tap lightly to seat splines and check blades for proper seating.

i. Heat the eleventh−stage wheel assembly to 375°F (191°C) (approximately five minutes) by installing 6897884 air heater on front side of wheel.

j. Remove heater and stack the tenth−stage wheel assembly onto eleventh−stage. Ensure external splines are mated. Tap lightly to seat splines and check blades for proper seating.

k. Heat the tenth−stage wheel assembly to 375°F (191°C) (approximately five minutes) by installing 6897884 air heater on front side of wheel.

l. Remove heater and stack the ninth−stage wheel assembly onto tenth−stage. Ensure external splines are mated. Tap lightly to seat splines and check blades for proper seating.

m. Heat the ninth−stage wheel assembly to 375°F (191°C) (approximately five minutes) by installing 6897884 air heater on front side of wheel.

n. Remove heater and stack the eighth−stage wheel assembly onto ninth−stage. Ensure external splines are mated. Tap lightly to seat splines and check blades for proper seating.

o. Heat the eighth−stage wheel assembly to 375°F (191°C) (approximately five minutes) by installing 6897884 air heater on front side of wheel.

p. Remove heater and stack the seventh−stage wheel assembly onto eighth−stage. Ensure external splines are mated. Tap lightly to seat splines and check blades for proper seating.

q. Heat the seventh−stage wheel assembly to 375°F (191°C) (approximately five minutes) by installing 6897884 air heater on front side of wheel.

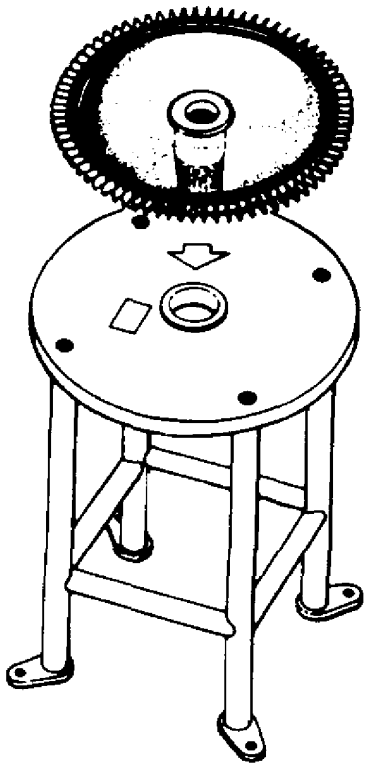

QBT010XG

Figure 9. Installing Fourteenth−stage Wheel in 6796872 Assembly Fixture

r. Remove heater and stack the sixth−stage wheel assembly onto seventh−stage. Ensure external splines are mated. Tap lightly to seat splines and check blades for proper seating.

s. Heat the sixth−stage wheel assembly to 375°F (191°C) (approximately five minutes) by installing 6897884 air heater on front side of wheel.

t. Remove heater and stack the fifth−stage wheel assembly onto sixth−stage. Ensure external splines are mated. Tap lightly to seat splines and check blades for proper seating.

u. Heat the fifth−stage wheel assembly to 375°F (191°C) (approximately five minutes) by installing 6897884 air heater on front side of wheel.

v. Remove heater and stack the fourth−stage wheel assembly onto fifth−stage. Ensure external splines are mated. Tap lightly to seat splines and check blades for proper seating.

w. Heat the fourth−stage wheel assembly to 375°F (191°C) (approximately five minutes) by installing 6897884 air heater on front side of wheel.

x. Remove heater and stack the third−stage wheel assembly onto fourth−stage. Ensure external splines are mated. Tap tightly to seat splines and check blades for proper seating.

y. Heat the third−stage wheel assembly to 375°F (191°C) (approximately five minutes) by installing 6897884 air heater on front side of wheel.

z. Remove heater and stack the second−stage wheel assembly onto third−stage. Ensure external splines are mated. Tap lightly to seat splines and check blades for proper seating.

aa. Heat the second−stage wheel assembly to 375°F (191°C) (approximately five minutes) by installing 6897884 air heater on front side of wheel.

ab. Remove heater and stack the first−stage wheel assembly onto second−stage, aligning index mark on first−stage wheel retaining flange axially with index mark on second−stage wheel front face (not balance marks). Ensure external splines are mated. Tap lightly to seat splines and check blades for proper seating.

ac. Allow rotor to stabilize at room temperature.

ad. Install first−stage blade slave retaining ring (6, figure 2), if not already installed.

ae. Lubricate tie bolt (3, figure 2) threads, thread face, and new O−ring seals (4 and 5) with Molykote 321 dry film lubricant. Install O−ring seals in place on tie bolt (3) and insert tie bolt into threads of the fourteenth stage wheel.

af. Use a thin−wall, 1 1/8 in. socket, wrench to tighten the tie bolt sufficiently to allow lifting of the rotor assembly.

ag. Attach the lift to first−stage wheel and remove rotor assembly from assembly fixture.

ah. Install the compressor rotor assembly in 6796833 transportation and storage stand.

ai. Install rotor assembly in assembly fixture, first stage down.

aj. Install a 1 1/8 in. thin−wall socket wrench and spline holder in the first−stage wheel hub.

ak. Tighten the rotor tie bolt to the fourteenth−stage wheel dish Dimension J (figure 14).

al. Use the fourteenth−stage wheel dish gage to check the dish dimension while tightening the tie bolt.

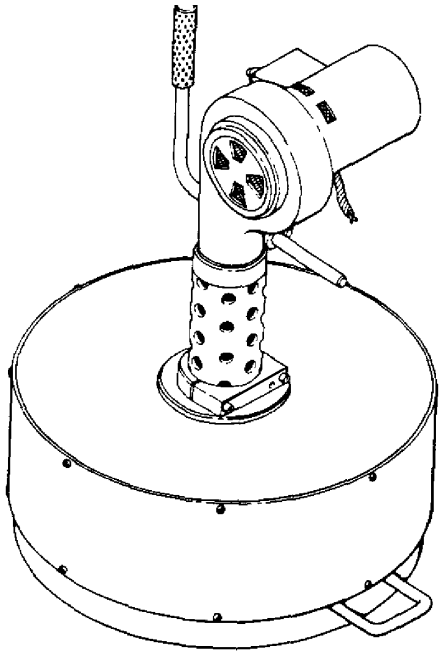

ZZT604XG

Figure 10. 6897884 Compressor Rotor Wheel Assembly Air Heater

am. Install rotor assembly in the rotor transportation and storage stand.

an. Attach 23038099 end press adapter (figure 11) (flat side up) on the adjustable table of 6796898 hydraulic press (figure 12).

ao. Install compressor rotor assembly on 23038099 fourteenth−stage end press adapter.

ap. Attach 6796899 compressor rotor first stage end press adapter (figure 13) on rotor assembly. This adapter locates on the 6.500 in. diameter rim of first−stage wheel assembly to apply a uniform load.

aq. Swing the head of the hydraulic press into place and lock.

ar. With the rotor supported on Surface H (figure 14), gradually apply a 20,000 pound load to first−stage adapter and hold for about one minute.

as. Release load.

NOTE

Install compressor rotor assembly in vertical position (first−stage down) in 6796833 transportation stand.

at. Remove rotor assembly from hydraulic press and install in assembly fixture, first−stage down.

NOTE

If adjustment of Dimension J is required, repeat steps aj thru at, this paragraph, until the requirement of Dimension J is stabilized.

au. Recheck Dimension J (figure 14) and adjust as required.

av. Install compressor rotor in assembly fixture, fourteenth−stage down.

aw. Install the tie bolt nut lock (2, figure 2) and retaining ring (1).

ax. Install rotor assembly in the 6796833 rotor transportation and storage stand.

ay. Place 6796886 rotor cover (figure 17) over the compressor rotor assembly. Rotor assembly is now ready for inspection. Refer to paragraph 8, this WP.

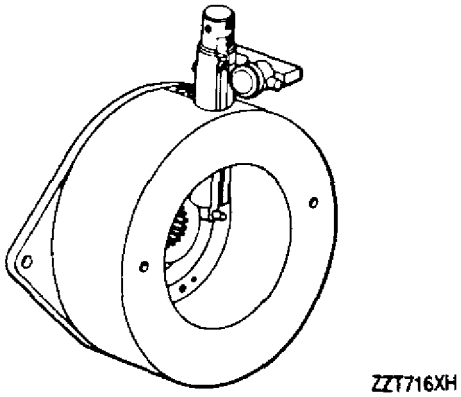

Figure 11. 23038099 Compressor Rotor Fourteenth−stage End Press Adapter

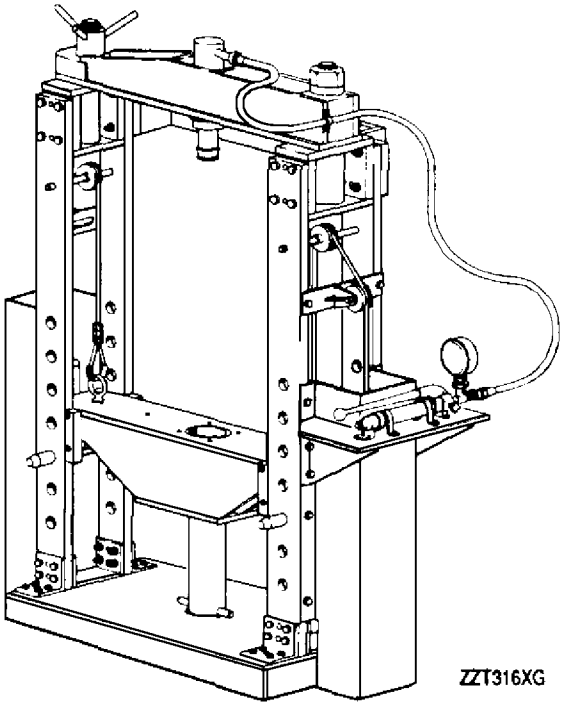

Figure 12. 6796898 20 Ton Capacity Hydraulic Press

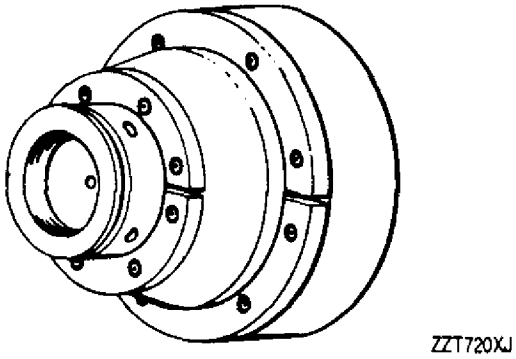

Figure 13. 6796899 Compressor Rotor First−stage End Press Adapter

NOTES:

1. Dimension J, tighten tie bolt until 0.030−0.032 in. is obtained.
2. Diameter E must be concentric, with respect to axis D−D established by Diameters A and B, within 0.0015 in. FIR.
3. Blade radius must be within limits specified in table 2.
4. The OD of each knife edge of each hub must be concentric, with respect to axis D−D established by Diameters A and B, within 0.004 in. FIR.
5. Inspect and grind blade tip radius as specified in paragraphs 9 and 10, this WP.
6. Wheel assembly blade tip OD for each stage must be concentric, with respect to axis D−D established by Diameters A and 8, within 0.004 in. FIR.
7. Dynamic balance rotor assembly within 0.10 oz in.

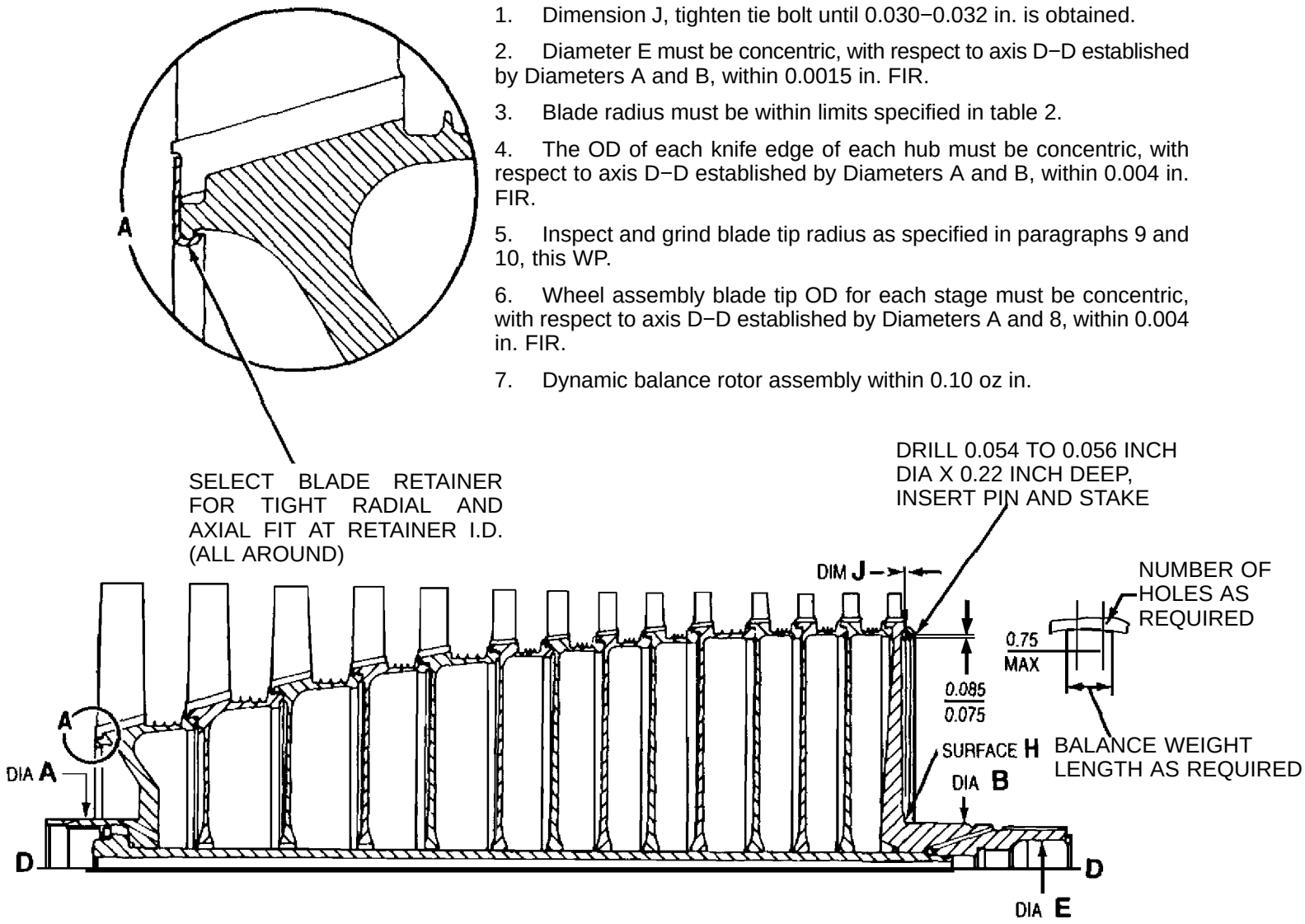

Figure 14. Compressor Rotor Assembly

MLC028XB

8. COMPRESSOR ROTOR ASSEMBLY − INSPECTION.

Support Equipment Required

Part No./Type Designation	Nomenclature
23037902	Step block, compressor rotor blade OD check
3435	Sling, compressor rotor assembly
23055767	Fixture, inspection, compressor rotor
6796540	Adapter, lifting
6796833	Stand, compressor rotor transportation and storage

NOTE

The following detail dash numbers are part of 23055767 compressor rotor inspection fixture (figure 20).

a. Install 3435 compressor rotor sling (figure 18) and remove compressor rotor assembly from 6796833 transportation and storage stand (figure 16) using 6796540 lifting adapter (figure 19).

b. Install detail −29 rear spacer on fourteenth stage end of rotor assembly and install detail −24 bearing and detail −53 shoe on first−stage end.

NOTE

Before installing compressor rotor into 23055767 compressor rotor inspection fixture, install 23037902 step block and prepare for blade inspection.

c. Install the compressor rotor assembly into the 23055767 inspection fixture (figure 20) with first−stage to left (detail − 40 yoke to right) and secure (figure 21).

d. Check the fourteenth−stage wheel runout and concentricity as specified in figure 14, note 2. If either runout or concentricity are out of limits, disassemble rotor per WP 027 00. Re−index the fourteenth−stage wheel and reassemble rotor assembly per paragraph 7, this WP.

e. Check the knife seal runout on each knife seal (39 places). Runout shall be acceptable to 0.004 in. FIR. It runout is out of limits, disassemble rotor per WP 027 00. Re−index the wheel assembly and reassemble rotor assembly per paragraph 7, this WP.

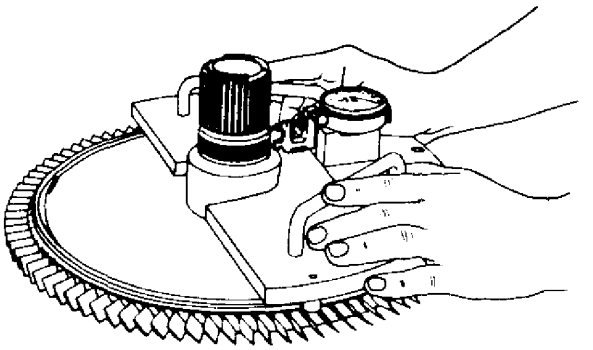

Figure 15. Checking Permanent Dish of Fourteenth−stage Compressor Wheel

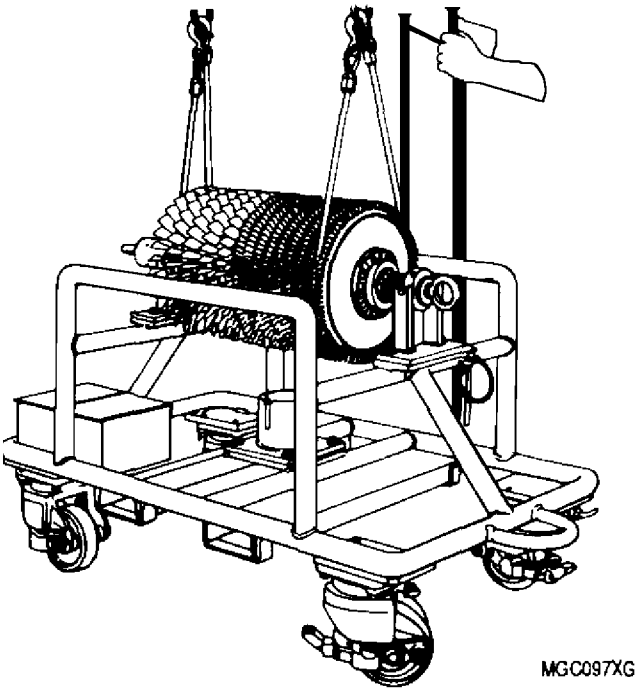

Figure 16. Installing Rotor Assembly in 6796833 Stand

NOTE

First−stage blades must be measured in their most rearward position in slots.

f. Use the dial indicator in reference to master radius gage to check blade radius. Due to blade tip shake, always check blade radius while turning rotor clockwise, viewed from aft side of wheel. Replace blades not meeting minimum radius limits of table 2.

g. After completion of inspection, rotor assembly is ready for final grinding. Refer to paragraph 9, this WP.

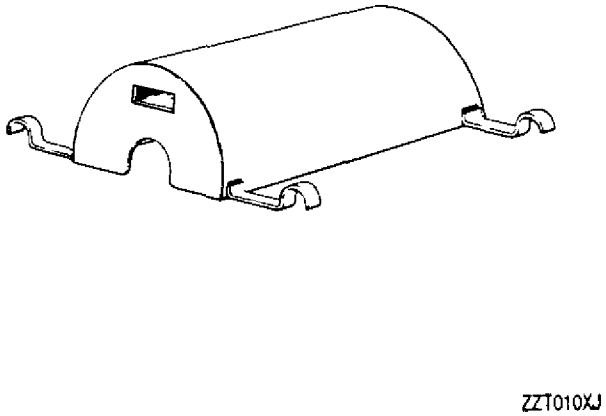

Figure 17. 6796886 Compressor Rotor Cover

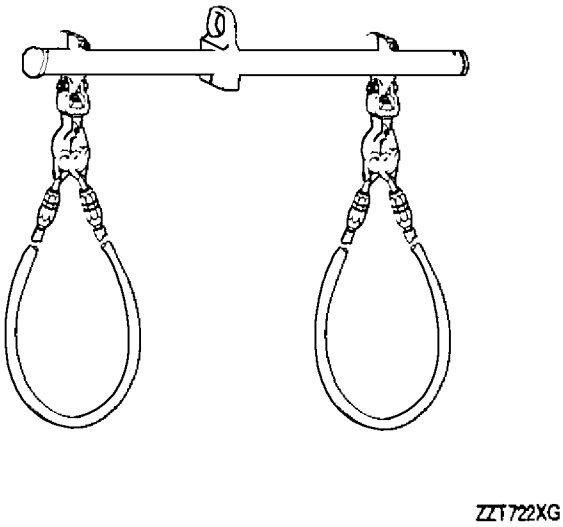

Figure 18. 3435 Compressor Rotor Sling

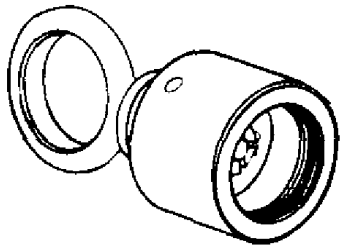

Figure 19. 6796540 Lifting Adapter

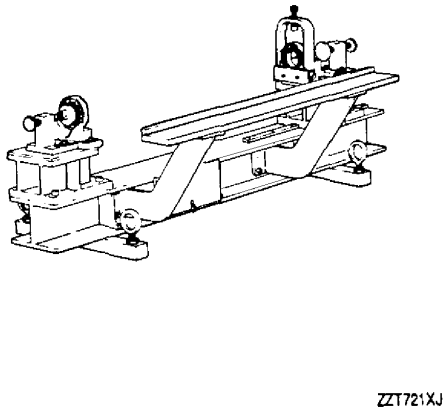

Figure 20. 23055767 Compressor Rotor Inspection Fixture

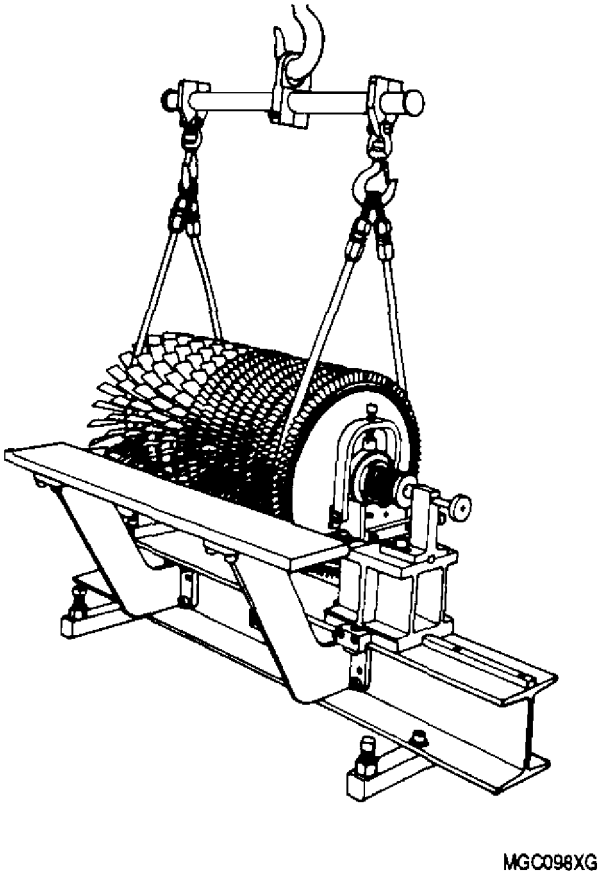

Figure 21. Installing Rotor Assembly on 23055767 Inspection Fixture

9. COMPRESSOR ROTOR ASSEMBLY − FINAL GRINDING.

Support Equipment Required

Part No./Type Designation	Nomenclature
23037908	Bar, test
23055767	Fixture, inspection, compressor rotor
6796540	Adapter, lifting
23055776	Fixture, grinding, compressor rotor
6796833	Stand, compressor rotor transportation and storage
——	Grinder (Landis Type C, 22 X 48)

NOTE

If all original blades were re−installed in rotor assembly (no new blades installed), final grinding of blade tips is not required. However, dynamic balance of rotor assembly per paragraph 10, this WP, must still be accomplished.

The compressor rotor assembly is tapered from the first− thru eighth−stage. Stages nine thru fourteen are straight.

a. Remove the rotor assembly from the 6796833 transportation and storage stand and place it in a 23055767 rotor inspection fixture (figure 20) as follows:

NOTE

The following detail dash numbers are part of the 23055767 compressor rotor inspection fixture.

(1) Install detail −29 rear spacer on fourteenth stage end of rotor assembly and install detail −24 bearing and detail −53 shoe on first−stage end.

NOTE

Always check the blade radius while turning rotor clockwise when viewed from the fourteenth−stage.

(2) Install the compressor rotor assembly into the 23055767 inspection fixture with first−stage to left (detail −40 yoke to right) and secure (figure 21).

b. Check compressor rotor blade tip radius to determine if within limits. Mark the longest blade in the ninth thru fourteenth stage and note the amount over the maximum blade radius. This will provide a starting point for grinding. Repeat the process for the taper grind of stages one thru eight, marking the longest first stage blade.

NOTE

The grinding fixture must be square to the grind wheel.

c. Install the 23055776 grinding fixture on the grinder.

d. Remove compressor rotor assembly from the 23055767 inspection fixture and install it in a Landis Type C, 22 x 48 grinder.

e. Rotation of the grinding wheel and rotor shall be in a clockwise direction, viewed from the fourteenth stage.

NOTE

First−stage blades must be secured in their most rearward position during grinding. Use a 30 x 2 x 12 in. or a 14 x 1 1/2 x 5 in. aluminum oxide wheel. (60 grit No. 11 Vitrified bond, No. 6 structure) Revolve the 14 in. grinding wheel at 1715 RPM, the 30 in. grinding wheel at 800 RPM and the work piece at 25 RPM. Feed in approximately 0.0005 in. increments. If grinding wheels of different diameters than those listed are used, the spindle speed (RPM) must be changed to maintain a 5900 to 6500 surface feet per minute (SFPM) cutting speed.

f. Grind stages nine thru fourteen only to bring blade tip radii within the limits specified in table 3. Keep material removal to a minimum.

Table 3. Compressor Wheel Assembly Blade Tip Grinding Radius

Stage	Blade Tip Radius After Grinding	Stage	Blade Tip Radius After Grinding
1	7.4772 in.	8	7.2846 in.
2	7.4428 in.	9	7.2689 in.
3	7.4105 in.	10	7.2689 in.
4	7.3795 in.	11	7.2689 in.
5	7.3536 in.	12	7.2689 in.
6	7.3255 in.	13	7.2689 in.
7	7.3042 in.	14	7.2689 in.

Radial tolerance ± 0.002 in. for all stages

NOTE

The center section of the 23037908 test bar is tapered.

g. Remove rotor assembly from the grinder and install 23037908 test bar. The test bar is used to set the grinder table at the correct taper for grinding stages one thru eight only,

h. After taper is set, remove test bar from grinder and install rotor assembly. Grind stages one through eight only to bring blade tip radii within the limits specified in table 3. Keep material removal to a minimum.

i. Remove all grinding burrs without breaking blade edge. Removal of burrs must not leave a radius on blade edge.

j. Check for blade movement in wheel slot. Tip shake in the circumferential direction is allowable.

k. Remove the rotor assembly from the grind fixture and install it in a 23055767 inspection fixture. Check compressor rotor blade tip radius per table 3. Used blades can be down to minimum radius given in table 2.

l. Remove the compressor rotor assembly from the inspection fixture and install it in 6796833 transportation and storage stand using 6796540 lifting adapter. Rotor assembly is ready for dynamic balancing. Refer to paragraph 10, this WP.

10. COMPRESSOR ROTOR ASSEMBLY − DYNAMIC BALANCING.

Support Equipment Required

Part No./Type Designation	Nomenclature
6796091	Drill jig, compressor rotor fourteenth−stage balance weight
6796540	Adapter, lifting
6796833	Stand, compressor rotor transportation and storage
6796886	Compressor rotor cover
GMR	Machine, dynamic balance

a. Install the compressor rotor assembly on the GMR dynamic balance machine and check balance. Unbalance must not exceed 0.1 oz in.

b. Correct unbalance as follows:

(1) Cut weight from balance ring stock to length as required for the fourteenth−stage wheel.

(2) Drill locking pinhole (0.054−0.056 in. diameter, 0.222 in. deep) with 6796091 drill jig and install the balance weight and locking pin (figures 14 and 22).

(3) Remove slave blade retainer from first stage wheel. Press and form weight (7, figure 2) into groove between blade lugs. Weight must be flush to 0.010 in. below blade lug forward surface. Reinstall the slave blade retainer.

c. Check rotor assembly balance. Unbalance must not exceed 0.1 oz in.

d. Mark a line 0.200 in. long per AS 478 CL−F midway between the blades on the wheel lug to line up circumferentially within ±10° to a similar line on adjacent wheel for match marking.

NOTE

Retainer ring will assemble readily if it is cooled in a deep freeze for about twenty minutes prior to installation.

e. After completion of the rotor balance, remove the slave blade retainer from the first−stage wheel. Select and install a blade retainer (6, figure 2) for tight radial and axial fit at retainer ID all around.

f. Remove compressor rotor assembly from the balancing machine and install in 6796833 transportation and storage stand using 6796540 lifting adapter. Install 6796886 rotor cover.

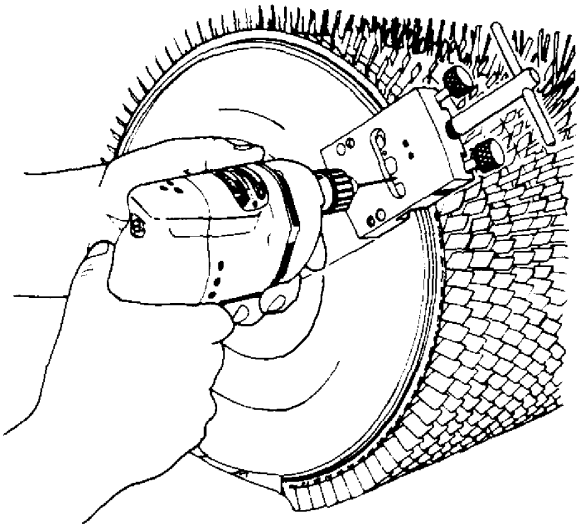

Figure 22. Drilling Fourteenth−Stage Wheel for Balance Weight Installation

DEPOT MAINTENANCE

DISASSEMBLY

COMPRESSOR CASE AND VANE ASSEMBLY

Reference Material

Maintenance . . . . . NAVAIR 02B−5DG−6−1
Compressor − Disassembly (except rotor) . . . . . WP 047 00
Compressor Case − Clean, Inspect, and Repair . . . . . WP 048 00

Alphabetical Index

Subject **Page No.**

Compressor Case and Vane Assembly 2
Disassembly 2
Introduction 2

Record of Applicable Technical Directives

None

1. **INTRODUCTION.**

2. This work package (WP) provides the instructions for disassembly of the compressor case and vane assembly used in the T56−A−427 turboprop engine.

3. **COMPRESSOR CASE AND VANE ASSEMBLY.**

4. COMPRESSOR CASE AND VANE ASSEMBLY − DISASSEMBLY.

Support Equipment Required

Part No./Type Designation	Nomenclature
6796547	Protector, assembly, stator vane

NOTE

Surface damage to case rear flange will cause air leakage during engine operation.

a. Refer to NAVAIR 02B−5DG−6−1, WP 047 00 to separate compressor case halves from the compressor rotor assembly and NAVAIR 02B−5DG−6−1, WP 048 00 for cleaning, inspection, and repair.

b. Disassemble compressor case halves as follows (figure 1).

CAUTION

When disassembling vanes from case, make sure the elongated bolt head does not turn inside or rests against the vane during the anti−torquing process.

(1) Remove the bolts (3), nuts (4), and washers (5) holding the compressor vanes (1) in the case halves (2).

(2) Remove the vanes (1) from the cases (2) and place them in the 6796547 protective case.

NOTE

Protective device should remain on case assembly whenever possible until reassembly of cases onto engine.

(3) Reassemble compressor case halves and install a locally manufactured protective device on the rear flange.

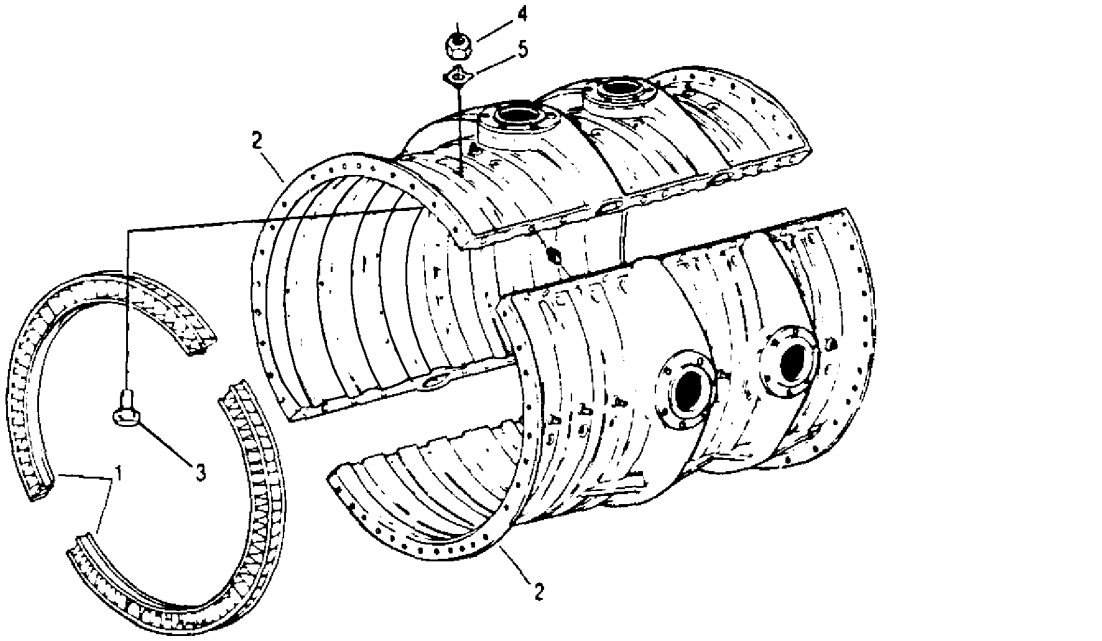

1. Compressor Vanes (Stages 1 through 13)
2. Compressor Case
3. Bolt
4. Nut
5. Washer

Figure 1. Compressor Case and Vane Disassembly

DEPOT MAINTENANCE

ASSEMBLY

COMPRESSOR CASE AND VANE ASSEMBLY

Reference Material

Compressor Stator Vanes − Cleaning, Inspection, and Repair . . . . . WP 073 00

Alphabetical Index

Subject **Page No.**

Compressor Case and Vane Assembly 2
Assembly 2
Introduction 2

Record of Applicable Technical Directives

None

1. **INTRODUCTION.**

2. This work package (WP) provides the instructions for assembly of the compressor case and vane assembly used in the T56−A−427 turboprop engine.

3. **COMPRESSOR CASE AND VANE ASSEMBLY.**

4. COMPRESSOR CASE AND VANE ASSEMBLY − ASSEMBLY.

Support Equipment Required

Part No./Type Designation	Nomenclature
23034349	Fixture, setting, compressor case vane height
23034350	Block, gage, compressor case vane height

Materials Required

Specification No./Part No.	Nomenclature
Molykote 321	Lubricant, dry film (Product of Dow Chemical Corp., Midland, MI 48640)

a. Set compressor case half (2, figure 1) on bench thirteenth−stage end down.

b. Place thirteenth−stage vane assembly (1) in vane groove of case (2).

NOTE

A small wand magnet will aid the insertion of bolts through the vane segments.

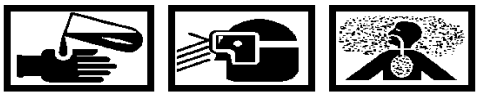

Dry Film Lubricant Molykote 321 67

c. Lubricate bolt threads with Molykote 321 dry film lubricant and secure vane assembly to case with bolts (3), cup washers (5), and nuts (4). Hold bolt in engaged position in vane band while installing cup washer until fully seated against case.

NOTE

Hand tighten nuts until seated, then torque with wrench.

d. Tighten center nut first, then the two middle nuts, and the two end nuts last. Torque nuts 40−50 lb in.; loosen and retighten to 25−30 lb in. (QA)

e. Repeat steps b, c, and d for first through twelfth stages.

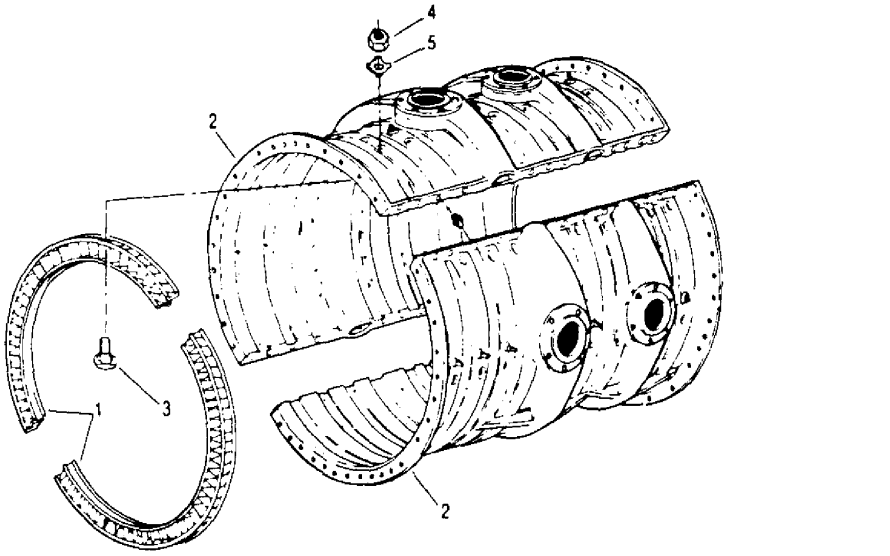

1. Vane Assembly (26)
2. Compressor Case Half (2)
3. Bolt (130)
4. Nut (130)
5. Cup Washer (130)

Figure 1. Compressor Case Details

f. Measure vane end clearance. Vane end clearance shall be 0.000 − 0.025 in. below both case axial splitlines.

CAUTION

Do not bend vane assemblies to meet Dimension C requirements of figure 3.

g. If vane assembly does not meet vane end clearance limit, remove vane from case and remove material from end of vane using a fine file. Removing material from top band of vane will bring vane “up” and removing material from bottom band will bring vane “down”.

h. Reinstall vane assembly in case per steps b, c, and d and set vane height per steps f and g as required. Repeat until vane height is within step f limit.

NOTE

Compressor case axial splitline bolt positions are designated one through fourteen running from front of case to rear.

i. Assemble compressor case halves together and install slave axial splitline bolts and nuts per table 1.

Table 1. Compressor Case Slave Hardware

Bolt Position	Bolt Type (in.)	Nut Type (in.)	Torque (lb in.)
1 thru 5	1/4 x 1	1/4	80−90
6 thru 14	5/16 x 1−1/16	5/16	150−160

j. Inspect inner and outer vane band total end gap clearances at axial splitlines. Inner and outer vane total end gap clearance must be 0.000 − 0.050 in. machine vane inner band ID per WP 073 00 to meet radial clearance limits of rotor assembly.

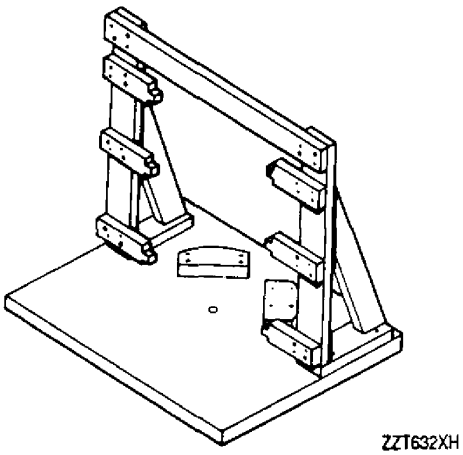

Figure 2. 23034349 Compressor Case Vane Height Setting Fixture

k. Install case assembly in 23034349 setting fixture (figure 2).

CAUTION

Do not bend vane assemblies to meet Dimension D requirements of figure 3. It is permissible to lightly polish on the OD of the outer band land on one side adjacent to bolt hole locations to correct small variations in axial Dimension D.

l. Measure Dimension C and axial Diameter D shown in figure 3 using 23034350 height gage block (figure 4). Dimensions shall be within the limits specified in figure 3.

m. Crimp cup washers (5, figure 1) to retain nuts (4).

n. Remove slave axial splitline bolts and nuts.

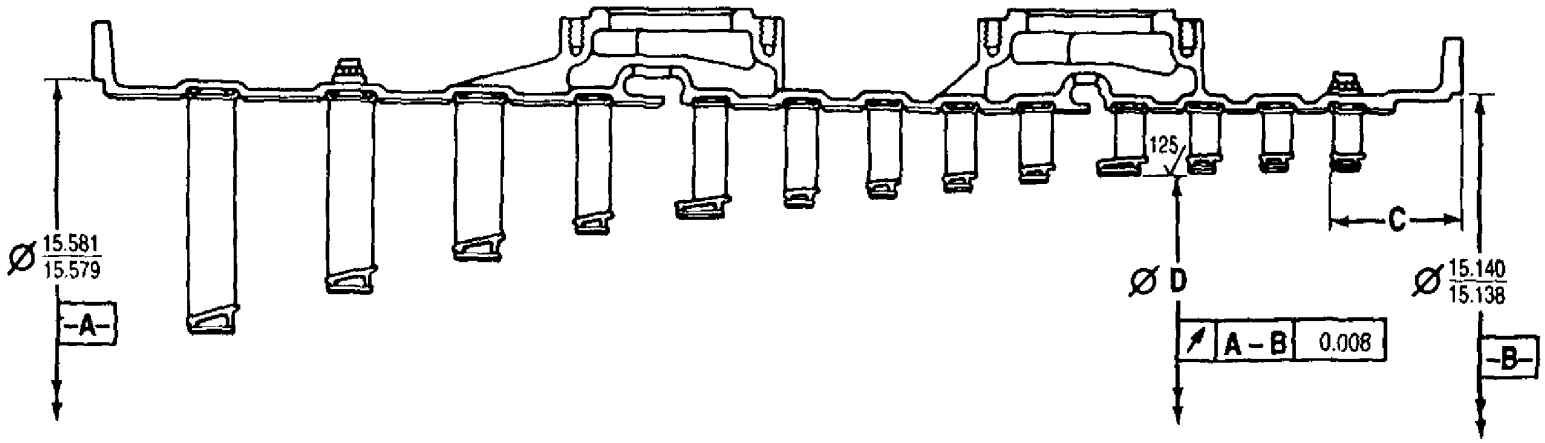

BASIC SEAL RADIUS

Vane Stage No.	Dimension C (in.)	Diameter D (in.)
1	21.419–21.457	7.628–7.632
2	19.116–19.154	8.884–8.888
3	16.944–16.982	9.885–9.889
4	14.918–14.950	10.733–10.737
5	13.211–13.243	11.258–11.262
6	11.388–11.412	11.590–11.594
7	10.001–10.025	11.859–11.863
8	8.710–8.734	12.088–12.092
9	7.432–7.456	12.369–12.373
10	6.164–6.188	12.622–12.626
11	4.620–4.644	12.681–12.685
12	3.375–3.399	12.771–12.775
13	2.183–2.207	12.785–12.789

Limits must be met under the following conditions:

a. A 15.580 in. diameter pilot ring in place at datum feature A.
b. A 15.139 in. diamater pilot ring in place at datum feature B.
c. All splitline bolts installed and tightened to required torque.
d. All vane assembly nuts tightened to required torque.
e. Vane assemblies must be fully seated in case vane grooves. Tighten nuts to required torque (prior to installing vane assemblies, clean case grooves and if necessary, lightly polish any scratch marks on front or rear face of vane assembly outer bands to assure that vane assemblies seat all around groove).
f. Measure Diameter D four places 45± 5 degrees and average readings. Do not bend vane assemblies to meet Dimension C. It is permissableto lightly polish the OD of the outer band land on one side adjacent to bolt hole locations to correct small variations in axial Dimension C.

Figure 3. Compressor Vane and Housing Assembly

MLC080XB

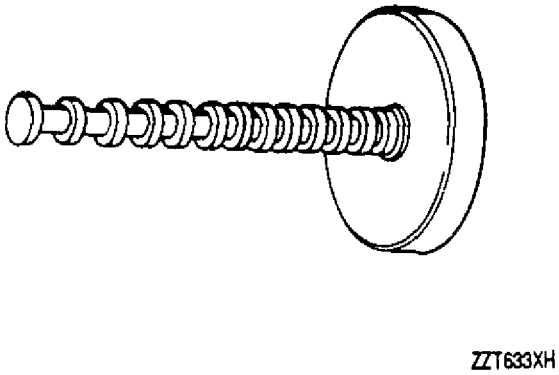

Figure 4. 23034350 Compressor Case Vane Height Gage Block

DEPOT MAINTENANCE

DISASSEMBLY

TURBINE ROTOR ASSEMBLY

Reference Material

Component Marking and Time Coding − Standard Procedures . . . . . WP 007 00

Alphabetical Index

Subject **Page No.**

Introduction 2
Turbine Rotor Assembly 2
Installation Into Rotor Holding Fixture 2
Separation Into Wheel Assemblies 2
Wheel Disassembly 5
Labyrinth Seal and Blade Removal (First−Stage) 5
Spacer Seal and Blade Removal (Second−Stage) 6
Seal and Blade Removal (Third−Stage) 8
Seal and Blade Removal (Fourth−Stage) 9

Record of Applicable Technical Directives

None

1. **INTRODUCTION.**

2. This work package (WP) provides the instructions for disassembly of the turbine rotor used in the T56−A−427 turboprop engine.

3. **TURBINE ROTOR ASSEMBLY.**

4. TURBINE ROTOR ASSEMBLY − INSTALLATION INTO ROTOR HOLDING FIXTURE.

Support Equipment Required

Part No./Type Designation	Nomenclature
23034290	Fixture, turbine holding
6796836	Stand, transportation and storage
6799523	Adapter, turbine rotor stand trunnion
6799619	Adapter, turbine rotor lifting

a. Attach hoist to fourth−stage 6799619 lifting adapter and remove rotor from 6796836 stand.

b. Remove 6799523 trunnion adapter from the first stage rotor.

c. Lower rotor into the 23034290 turbine holding fixture (figure 1).

d. Remove hoist.

e. Remove 6799619 lifting adapter and 6799523 trunnion adapter from the fourth−stage rotor.

5. TURBINE ROTOR ASSEMBLY − SEPARATION INTO WHEEL ASSEMBLIES.

Support Equipment Required

Part No./Type Designation	Nomenclature
2101	Pencil
23033017	Protector, curvic coupling
23034281	Puller, first to second−stage spacer
23034283	Support, wheel
23034290	Fixture, turbine holding

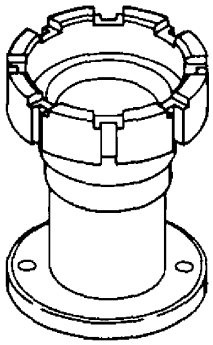

Figure 1. 23034290 Turbine Rotor Holding Fixture

NOTE

Condemn all blades within the effected turbine wheel, immediately down stream from any vane with “burn through”. Vane “burn through” is defined as the complete melting or disintegration of the vane airfoil until there is no physical material bond between the remaining segments of the detail vane. This applies to all turbine stages (1−4).

a. Index each wheel with 2101 pencil for later assembly. Refer to WP 007 00 for component marking procedures.

b. Remove nuts (1, figure 2) from turbine clamp bolts (12).

NOTE

Turbine vent tube may come out with wheel removal.

c. Lift the fourth−stage wheel assembly (2) from the rotor and install 23033017 curvic coupling protector.

d. Remove turbine vent tube (3).

e. Remove seat rings (4) and seal ring expanders (5) from vent tube.

f. Liftoff third to fourth interstage seal support (6) from rotor.

g. Remove the third−stage wheel assembly (7) from rotor and install 23033017 curvic coupling protector.

h. Lift off second to third interstage seal support assembly (8) from rotor.

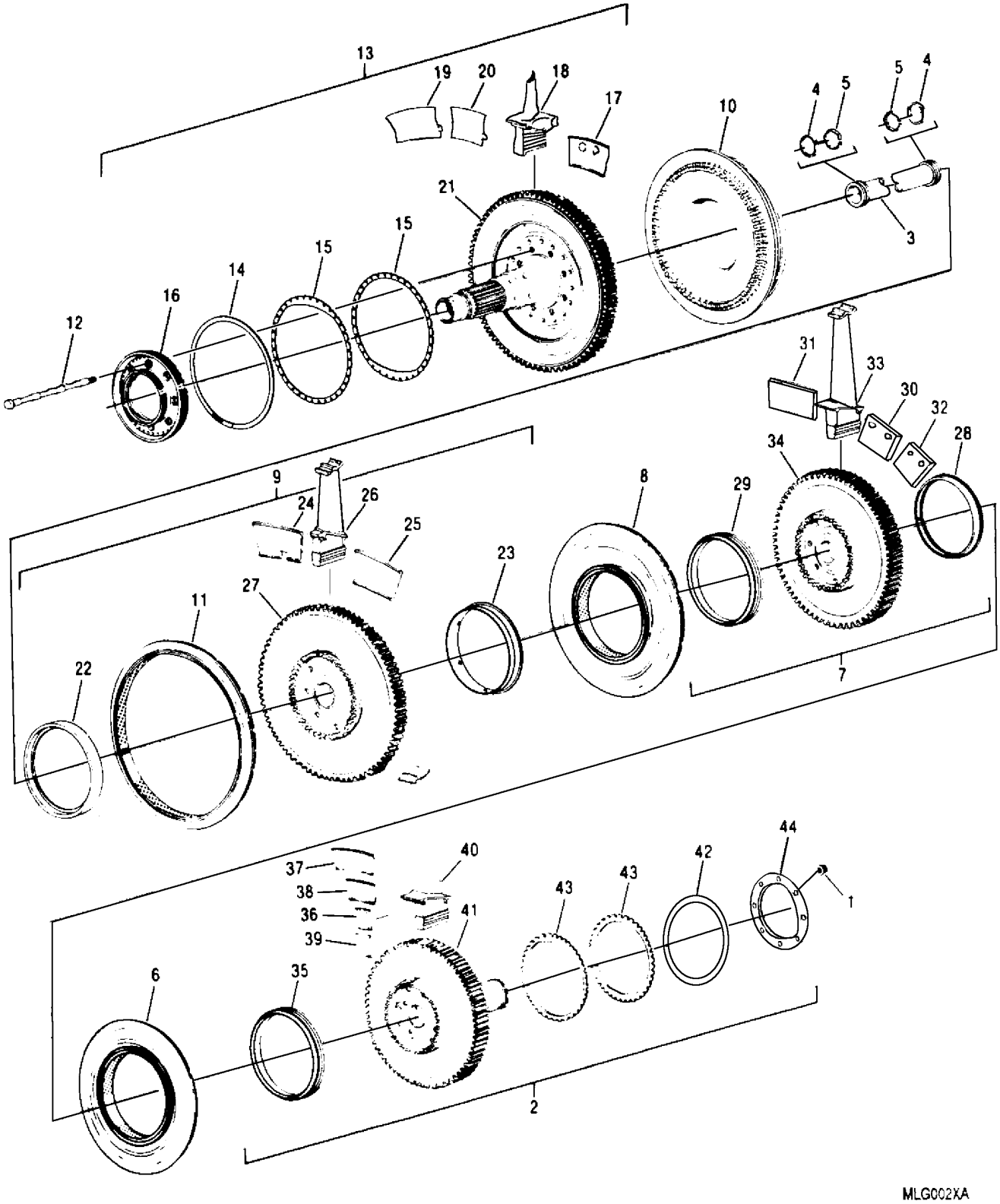

Figure 2. Turbine Rotor Assembly Parts (Sheet 1 of 2)

1. Nut
2. Fourth−stage Wheel Assembly
3. Vent Tube
4. Seal Ring
5. Seal Ring Expander
6. Third to Fourth Interstage Seal Support
7. Third−stage Wheel Assembly
8. Second to Third Interstage Seal Support Assembly
9. Second−stage Wheel Assembly
10. First to Second−stage Spacer Assembly
11. Second−stage Vane Seal Support
12. Clamp Bolt
13. First−stage Wheel Assembly
14. Internal Retaining Ring
15. Forward Balance Rings
16. Front Labyrinth Seal
17. First−stage Smash Cover Plate
18. First−stage Blade
19. First−stage Cover Plate, Three Span
20. First−stage Cover Plate, Two Span
21. First−stage Wheel
22. Curvic Seal Ring
23. Second to Third−stage Forward Labyrinth Seal Assembly
24. Second−stage Cover Plate, Four Span
25. Second stage Cover Plate, Five Span
26. Second−stage Blade
27. Second−stage Wheel
28. Third to Fourth−stage Forward Labyrinth Seal Assembly
29. Second to Third−stage Aft Labyrinth Seal Assembly
30. Third−stage Smash Cover Plate Assembly
31. Third−stage Cover Plate, Four Span
32. Third−stage Cover Plate, Two Span
33. Third−stage Blade
34. Third−stage Wheel
35. Third to Fourth−stage Aft Labyrinth Seal Assembly
36. Fourth−stage Cover Plate, Two Span
37. Fourth−stage Cover Plate, Two Span
38. Fourth−stage Cover Plate, Four Span
39. Fourth−stage Smash Cover Plate
40. Fourth−stage Blade
41. Fourth−stage Wheel
42. Internal Retaining Ring
43. Aft Balance Rings
44. Aft Rotor Spacer

Figure 2. Turbine Rotor Assembly Parts (Sheet 2 of 2)

i. Remove second−stage wheel assembly (9) from rotor and install assembly on 23034283 wheel support with first to second−stage turbine spacer assembly (10) up.

j. Install 23034281 spacer puller and remove first to second−stage turbine spacer assembly (10).

k. Remove second−stage vane seal support (11) from the first to second−stage turbine spacer assembly.

l. Hold clamp bolts (12) in place and remove first−stage wheel assembly (13) from 23034290 holding fixture.

m. Remove clamp bolts from wheel.

6. TURBINE ROTOR ASSEMBLY − WHEEL DISASSEMBLY.

7. Labyrinth Seal and Blade Removal (First− Stage).

Support Equipment Required

Part No./Type Designation	Nomenclature
23033003	Puller, turbine front labyrinth seal
6799627	Fixture, turbine blade assembly/disassembly
23034283	Support, turbine wheel

Materials Required

Specification No./Part No.	Nomenclature
A−A−50493	Oil, penetrating

a. Remove internal retaining ring (14, figure 2) and forward balance rings (15) from first−stage turbine wheel.

b. Place first−stage wheel assembly (13) on 23034283 turbine wheel support with shaft up.

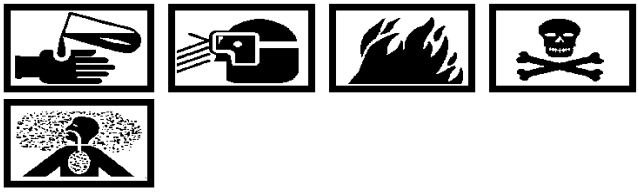

Penetrating Oil A−A−50493

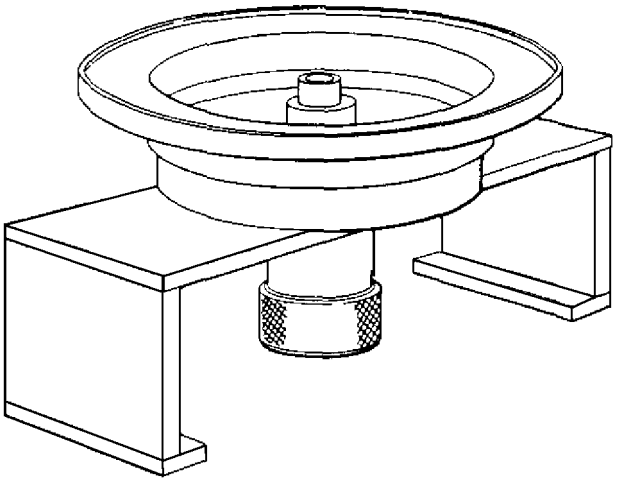

Figure 3. 6799627 Turbine Wheel Blade Assembly and Disassembly Fixture

c. Lubricate front labyrinth seal (16) with A−A−50493 penetrating oil for ease of removal.

d. Install 23033003 front labyrinth seal puller and remove the front seal.

e. Remove first−stage wheel assembly from 23034283 support.

NOTE

The following detail dash numbers are subassemblies of the 6799627 turbine assembly/disassembly fixture.

f. Assemble detail−28 anvil and detail −31 post onto detail−27 table using detail−29 socket head cap screws.

g. Install this assembly onto 6799627 base fixture (figure 3).

h. Install detail−30 bushing into first−stage wheel and place wheel onto detail−31 post.

CAUTION

Use care not to damage wheel or blades when cutting smash plate.

i. Remove smash cover plate (17, figure 2) as follows:

(1) Grind off rivet heads from smash cover plate.

NOTE

Smash cover plate is 0.035 in. thick.

(2) Cut thru smash cover plate at area as shown in figure 4.

(3) Remove smash cover plate.

j. Remove blades (18, figure 2) where smash cover plate is removed.

k. With a brass drift and hammer lightly tap cover plates (19 and 20) while removing remaining blades and cover plates.

l. Remove wheel (21) from fixture.

m. Remove detail−30 bushing from wheel.

8. Spacer Seal and Blade Removal (Second−Stage).

Support Equipment Required

Part No./Type Designation	Nomenclature
6799627	Fixture, turbine blade assembly/disassembly
23033018−8	Ring, pressure
23034282	Puller, turbine seal
23034283	Support, turbine wheel

Materials Required

Specification No./Part No.	Nomenclature
A−A−50493	Oil, penetrating

a. Place second−stage wheel assembly (9, figure 2) on 23034283 support with curvic seal ring (22) up.

b. Remove curvic seal ring from second−stage wheel.

c. Remove second−stage wheel assembly from support, turn over and place back on support.

Penetrating Oil A−A−50493 51

d. Lubricate second to third−stage forward labyrinth seal assembly (23) with A−A−50493 penetrating oil to aid in removal.

e. Install 23034282 seal puller and remove second to third−stage forward labyrinth seal.

f. Remove wheel from support.

NOTE

The following detail dash numbers are subassemblies of the 6799627 turbine assembly/disassembly fixture.

g. Install detail−30 bushing in the center of the wheel and place the wheel on the detail−31 post.

h. Remove notched cover plate (24) and slide remaining cover plates (25) from wheel.

i. Place 23033018−8 pressure ring on top of blades (26) outside the perimeter of the wheel.

CAUTION

Heavy blows will damage blades, tap lightly.

j. Tap lightly on ring to remove blades.

k. Remove wheel (27) from support.

l. Remove detail−30 bushing from center of wheel.

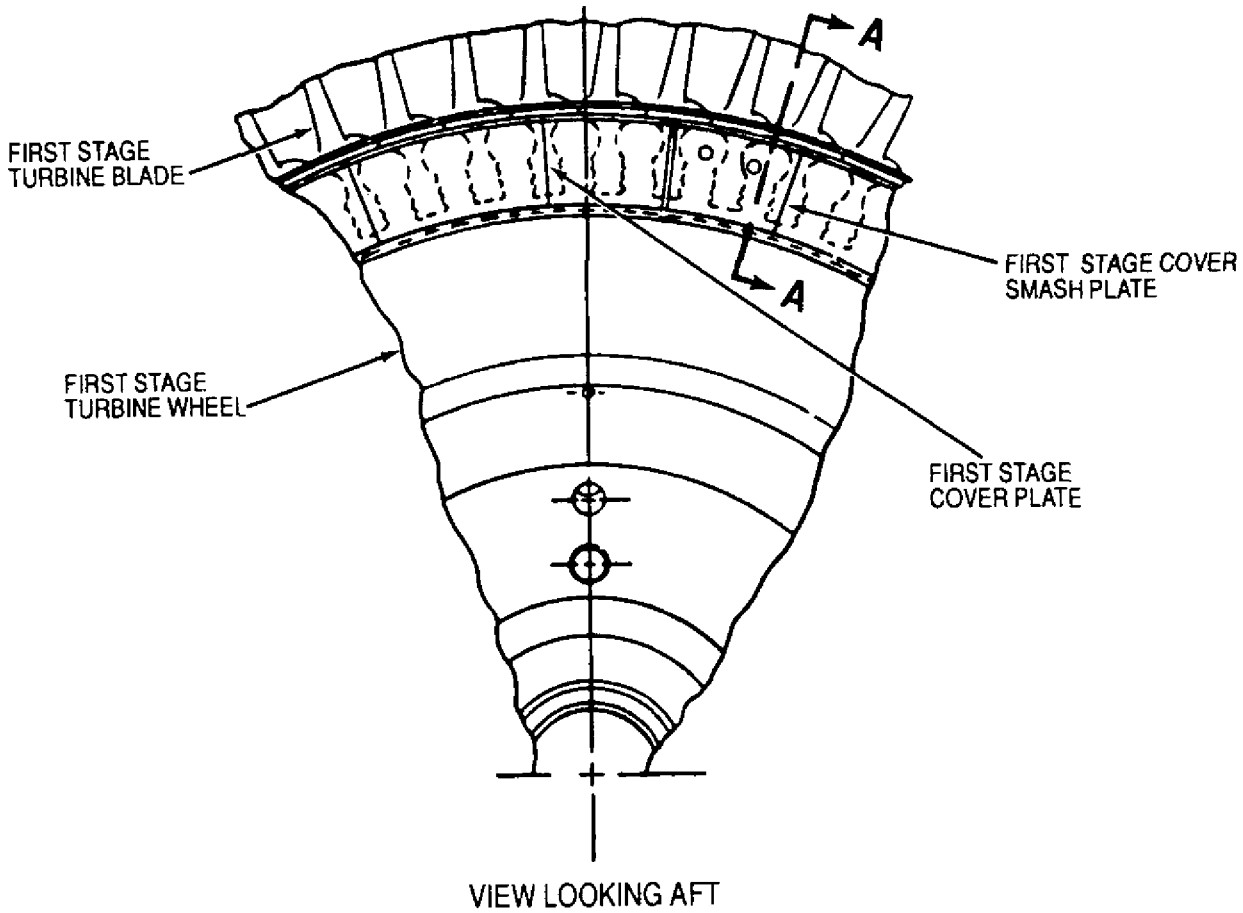

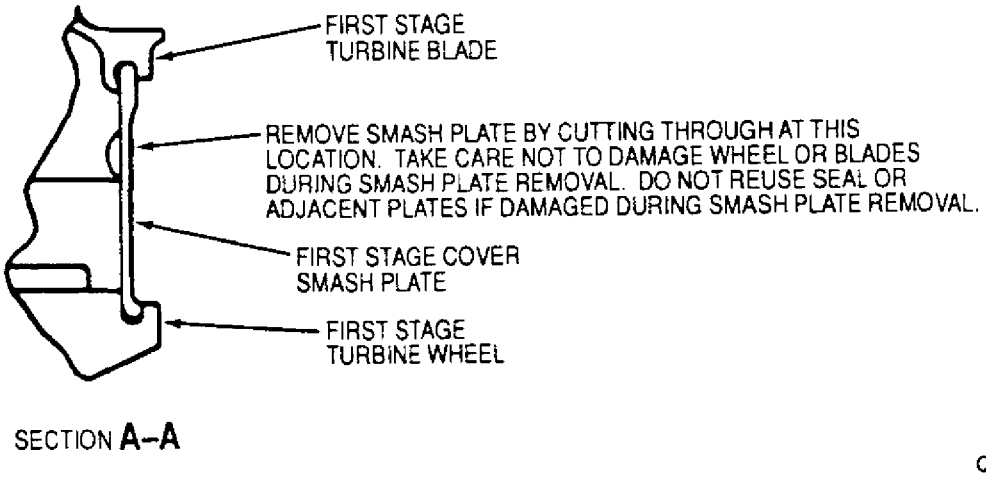

Figure 4. First−Stage Seal Smash Cover Plate Removal

9. Seal and Blade Removal (Third−Stage).

Support Equipment Required

Part No./Type Designation	Nomenclature
6799627	Fixture, turbine blade assembly/disassembly
23033018−7	Ring, pressure
23034282	Puller, turbine seal
23034283	Support, turbine wheel

Materials Required

Specification No./Part No.	Nomenclature
A−A−50493	Oil, penetrating

a. Place third−stage wheel assembly (7, figure 2) on 23034283 support with cover plates up.

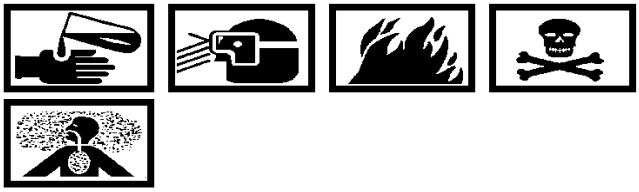

Penetrating Oil A−A−50493 51

b. Lubricate third to fourth−stage forward labyrinth seal assembly (28) with A−A−50493 penetrating oil to aid in removal.

c. Install 23034282 seal puller and remove third to fourth−stage forward labyrinth seal assembly from wheel.

d. Remove third−stage wheel assembly from support, turn over and place back on support.

e. Lubricate second to third−stage aft labyrinth seal assembly (29) with A−A−50493 penetrating oil to aid in removal of seal.

f. Install 23034282 seal pulley and remove second to third−stage aft labyrinth seal assembly.

g. Remove third−stage wheel assembly from support.

NOTE

The following detail dash numbers are subassemblies of the 6799827 turbine assembly/disassembly fixture.

h. Install detail−30 bushing in center of thirdstage wheel assembly and place wheel onto detail−31 post, cover plates up.

CAUTION

Care must be taken not to damage wheel or blades while removing cover plates.

NOTE

Do not reuse any cover plates damaged during removal.

i. Remove rivet head from two seal cover plates (30). Refer to figure 5.

j. Punch in remaining rivet to remove plate.

Penetrating Oil A−A−50493 51

k. Lubricate cover plate (31, figure 2) and seal cover plate (32) with A−A−50493 penetrating oil to aid in removal.

l. Using a hammer and a brass drift, tap plates in direction of wheel rotation until a plate can be removed thru wheel recess.

m. Press 5 or 6 blades (33) down 0.10 in. where cover plate has been removed.

n. Tap remaining cover plates around removing them from the recessed blade area.

o. Install 23033018−7 pressure ring on top of blades outside the perimeter of the wheel.

CAUTION

Heavy blows will damage blades, tap lightly.

p. Tap lightly around pressure ring, removing blades from wheel.

q. Remove third−stage wheel (34) from support.

r. Remove detail−30 bushing from center of wheel.

10. Seal and Blade Removal (Fourth−Stage).

Support Equipment Required

Part No./Type Designation	Nomenclature
6799627	Fixture, turbine blade assembly/disassembly
23033018−5	Ring, pressure
23034282	Puller, turbine seal
23034283	Support, turbine wheel

Materials Required

Specification No./Part No.	Nomenclature
A−A−50493	Oil, penetrating

a. Place fourth−stage wheel assembly (2, figure 2) on 23034283 support with shaft down.

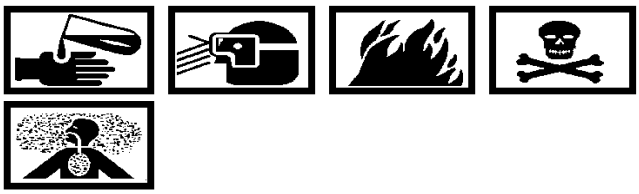

Penetrating Oil A−A−50493 **51**

b. Lubricate third to fourth−stage aft labyrinth seal (35) with A−A−50493 penetrating oil to aid in removal.

c. Install 23034282 seal puller and remove third to fourth−stage aft labyrinth seal.

d. Remove wheel assembly from support.

NOTE

The following detail dash numbers are subassemblies of the 23433018 turbine wheel assembly/disassembly adapter set.

e. Install detail−1 pilot into shaft of fourth−stage wheel assembly.

f. Install detail− 4 locating ring onto detail−3 locating plate with detail−2 socket head cap screws.

g. Install detail−12 support ring into detail−3 locating plate.

h. Install fourth−stage wheel assembly onto 6799627 fixture shaft down.

CAUTION

Care must be taken not to damage wheel or blades while removing cover plates.

i. Grind rivet head of cover plates (36, figure 2) flush with plate surface (figure 6).

j. Punch in remaining rivet to remove plate.

k. Remove cover plates.

l. Lubricate remaining cover plates (37 and 38, figure 2) and smash cover plate (39) with A−A−50493 penetrating oil to aid in removal.

m. With a hammer and brass drift, tap cover plates around until the cover plates can be removed from the recessed area in the wheel assembly (figure 6).

n. Press down 5 or 6 blades (40, figure 2) 0.010 in. to allow for the remaining plates to be removed.

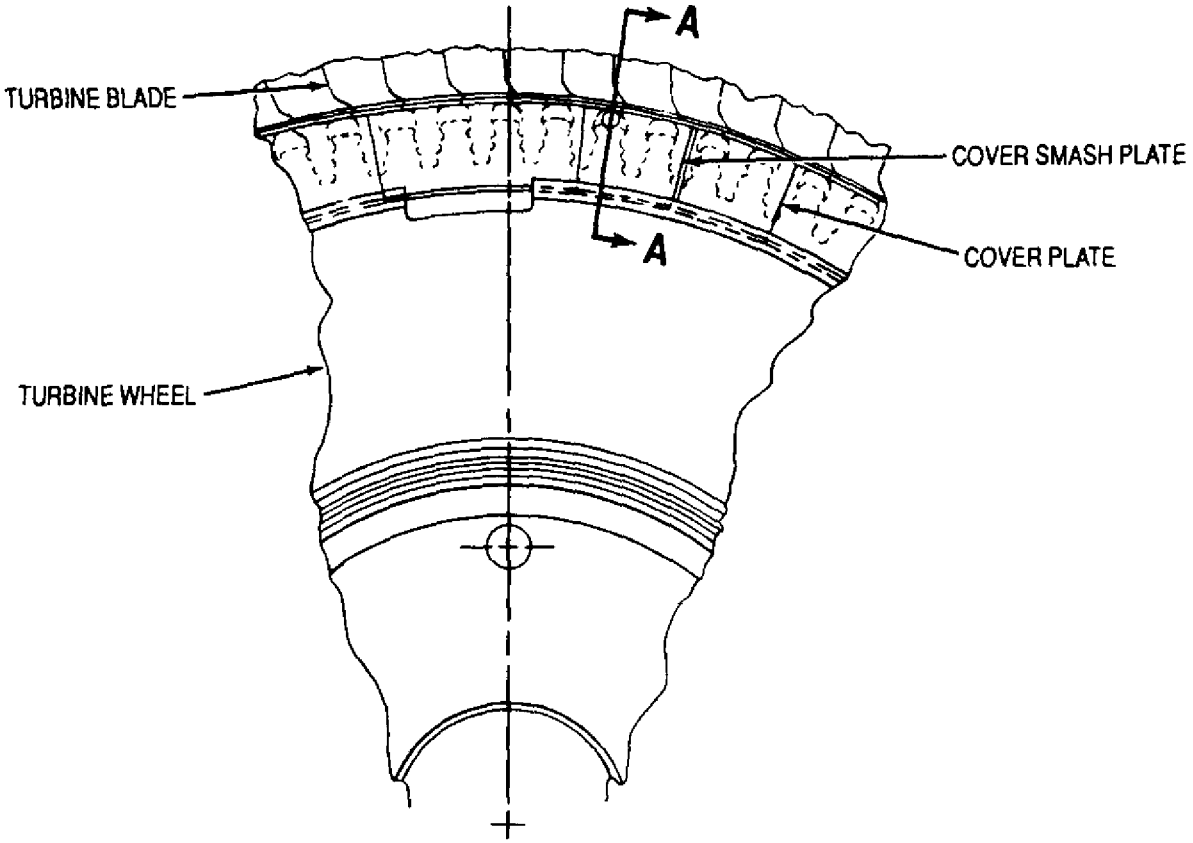

VIEW LOOKING FORWARD

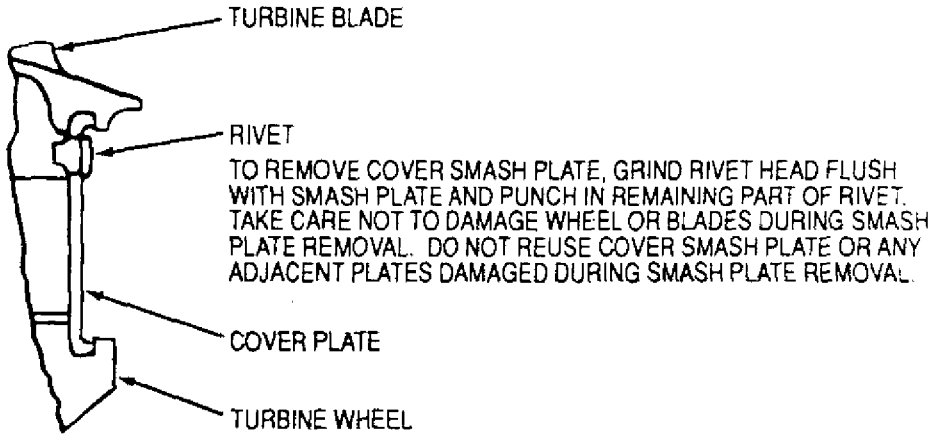

SECTION **A–A**

OMG016XA

Figure 5. Third−Stage Turbine Cover Plate Removal

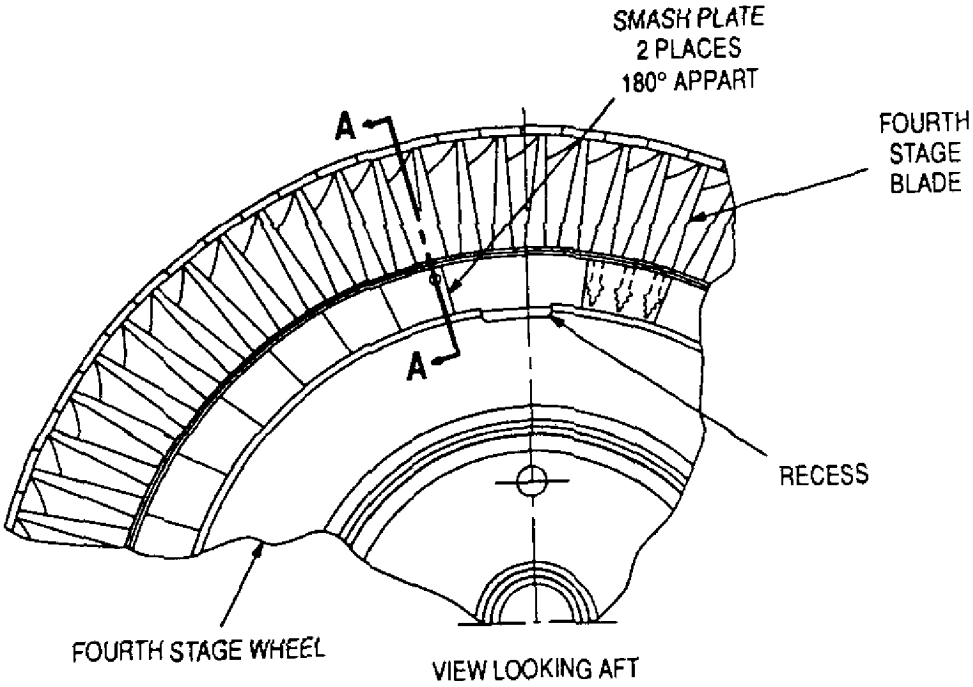

GRIND HEAD FLUSH WITH PLATE SURFACE AND PUNCH IN REMAINING PART OF RIVET TO REMOVE PLATE. DO NOT DAMAGE WHEEL OR BLADES. DO NOT REUSE PLATE OR ANY ADJACENT PLATES DAMAGED DURING REMOVAL OF PLATE.

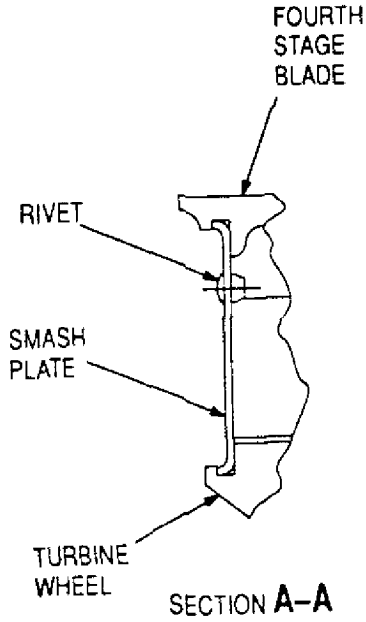

MLG003XA

Figure 6. Fourth−Stage Cover Plate Removal

o. Remove all other cover plates over depressed blades, tapping cover plates as necessary.

p. After all cover plates have been removed, place detail−5 pressure ring over blades.

CAUTION

Heavy blows will damage blades, tap lightly.

q. Tap lightly around pressure ring to remove blades from wheel assembly.

r. Remove wheel (41) from support.

s. Remove detail−1 pilot from wheel.

t. Remove aft retaining ring (42) and balance rings (43) from turbine wheel.

u. With a brass drift and hammer tap radially on the aft rotor spacer (44) until clamp bolt holes are offset to the wheel.

v. Turn wheel over.

w. With a brass drift and hammer, tap spacer through clamp bolt holes until spacer is removed.

DEPOT MAINTENANCE

ASSEMBLY AND BALANCING

TURBINE ROTOR ASSEMBLY

Reference Material

None

Alphabetical Index

Subject **Page No.**

General 2
Introduction 2
Turbine Rotor Assembly 2
Assembly 14
First– to Second–Stage Spacer Assembly Installation 15
Fourth–Stage Wheel Installation 15
Front Labyrinth Seal and Balance Plate Installation 14
Third–Stage Wheel Installation 15
Blade and Seal Installation (First–Stage) 2
Blade and Seal Installation (Second–Stage) 3
Blade and Seal Installation (Third–Stage) 7
Blade and Seal Installation (Fourth–Stage) 9
Blade Tip Radius Inspection 11
Clamp Bolt Measurement 16
Rotor Runout and Stack Dimension Inspection 17
Wheel Assembly Balancing 13

Record of Applicable Technical Directives

None

1. **INTRODUCTION.**

2. This work package (WP) provides the instructions for assembly and balancing of the turbine rotor assembly used on the T56−A−427 turboprop engine.

3. **GENERAL.**

a. Wipe off excess lubricant when using it as an assembly aid for parts.

b. All parts must be clean and free of foreign material prior to assembly.

c. Curvic couplings on all wheels must be protected against damage at all times before assembly.

d. Ensure curvic to curvic or curvic to hub dimensions of individual turbine wheels (Dimension D, E, F, and G, figure 1) are marked on parts.

e. Measure individual wheel curvic to curvic (second− and third−stage) or curvic to hub face (first and fourth−stage) dimensions.

f. Mark individual wheel curvic to curvic or curvic to hub dimensions to the nearest 0.001 in., if not previously identified.

4. **TURBINE ROTOR ASSEMBLY.**

5. TURBINE ROTOR ASSEMBLY − BLADE AND SEAL INSTALLATION (FIRST−STAGE).

Support Equipment Required

Part No./Type Designation	Nomenclature
6799627	Fixture, blade assembly

Materials Required

Specification No./Part No.	Nomenclature
Berol 753	Pencil
23033676	Cover plate, first−stage smash
2303365−1 −2, or −3	Cover plate, first−stage
23033674	Cover plate, first−stage

a. Weigh first−stage blades (1, figure 2) to the nearest 0.1 gram and mark weight on each blade using a Berol 753 pencil.

b. Layout blades according to weight.

c. Place first−stage wheel (2) on 6799627−23 assembly ring with shaft up.

NOTE

Do not insert base of blade fully into wheel until all blades have been started.

d. Insert all blades into the wheel slots using proper weight sequence shown in figure 4 (note that second−stage is shown).

e. Advance blades in small movements (less than 0.050 in.) until all blades are flush with wheel.

(1) Move 3 or 4 blades aft 0.10 in. to allow access for cover plates.

(2) Install first−stage cover plates (three span) (3, figure 2), first−stage cover plates (two span) (4), and first−stage smash cover plate (5).

(3) Advance one at a time until all are in contact to allow the alignment of the smash plate rivets around a blade stalk (figure 3).

NOTE

Obtain total gap by installing smaller or larger plates as required prior to pressing plate.

(4) Establish a gap of 0.030−0.050 in. between smash cover plate and adjacent plate before pressing smash cover plate (figure 3) with all retaining plates installed and pushed outward to take up radial clearance and pushed around to close all end gaps.

(5) Press smash cover plate just enough to retain the plate. (It will be pressed flat after check balancing.)

(6) Install curvic protector.

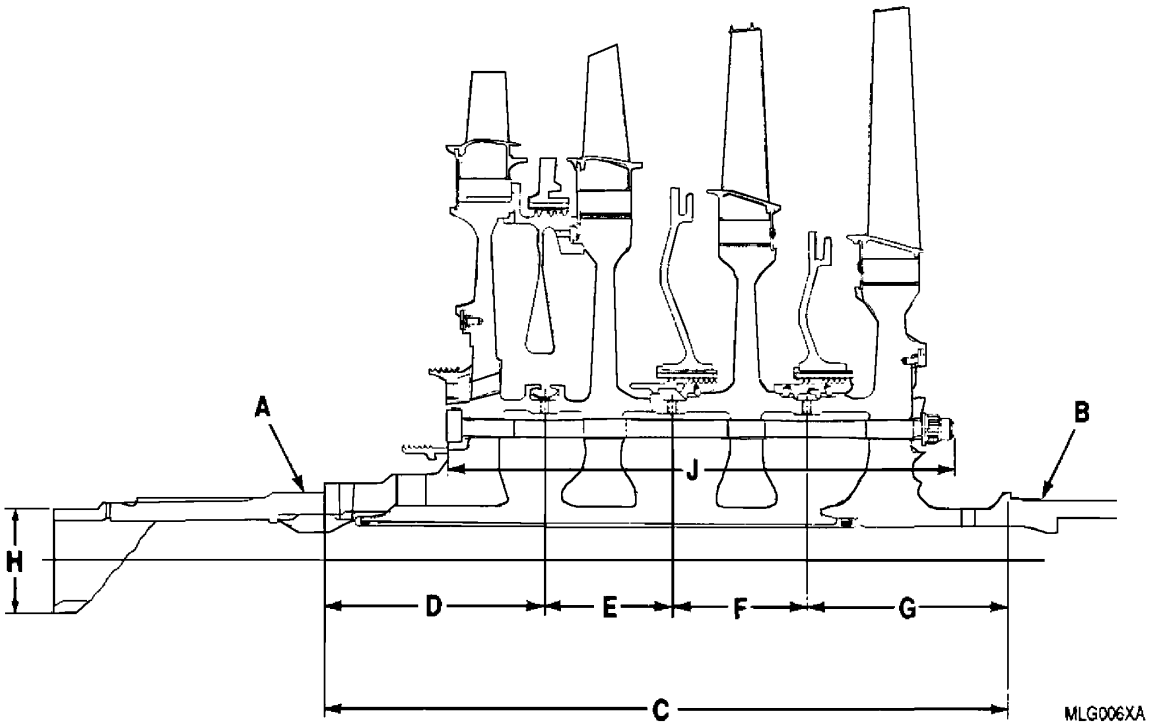

Figure 1. Turbine Rotor Measurement Locations

6. TURBINE ROTOR ASSEMBLY − BLADE AND SEAL INSTALLATION (SECOND−STAGE).

Support Equipment Required

Part No./Type Designation	Nomenclature
23033018	Fixture, turbine blade assembly
23034283	Support, turbine wheel assembly
23034296	Drift, inner seal installation
6799627	Fixture, blade assembly

Materials Required

Specification No./Part No.	Nomenclature
Berol 753	Pencil
MIL−T−23397	Tape, pressure sensitive masking
23032501	Cover plate, notched
23032502−1, −2, or −3	Cover plate, second stage

a. Place second− to third−stage forward labyrinth seal assembly (6, figure 2) in oven at 300°F (149°C) for 15−20 minutes.

b. Place second−stage wheel (7) on to 23034283 support forward side down.

WARNING

Heated parts will cause skin damage (burns). Use clean insulated gloves to handle parts.

c. Remove second− to third−stage forward labyrinth seal assembly from the oven and place on aft side of wheel, knife edges up.

d. With 23034296 drift, apply sufficient pressure to properly seat seal.

e. Weigh second−stage blades (8) to the nearest 0.10 gram and mark weight on each blade with a Berol 753 pencil.

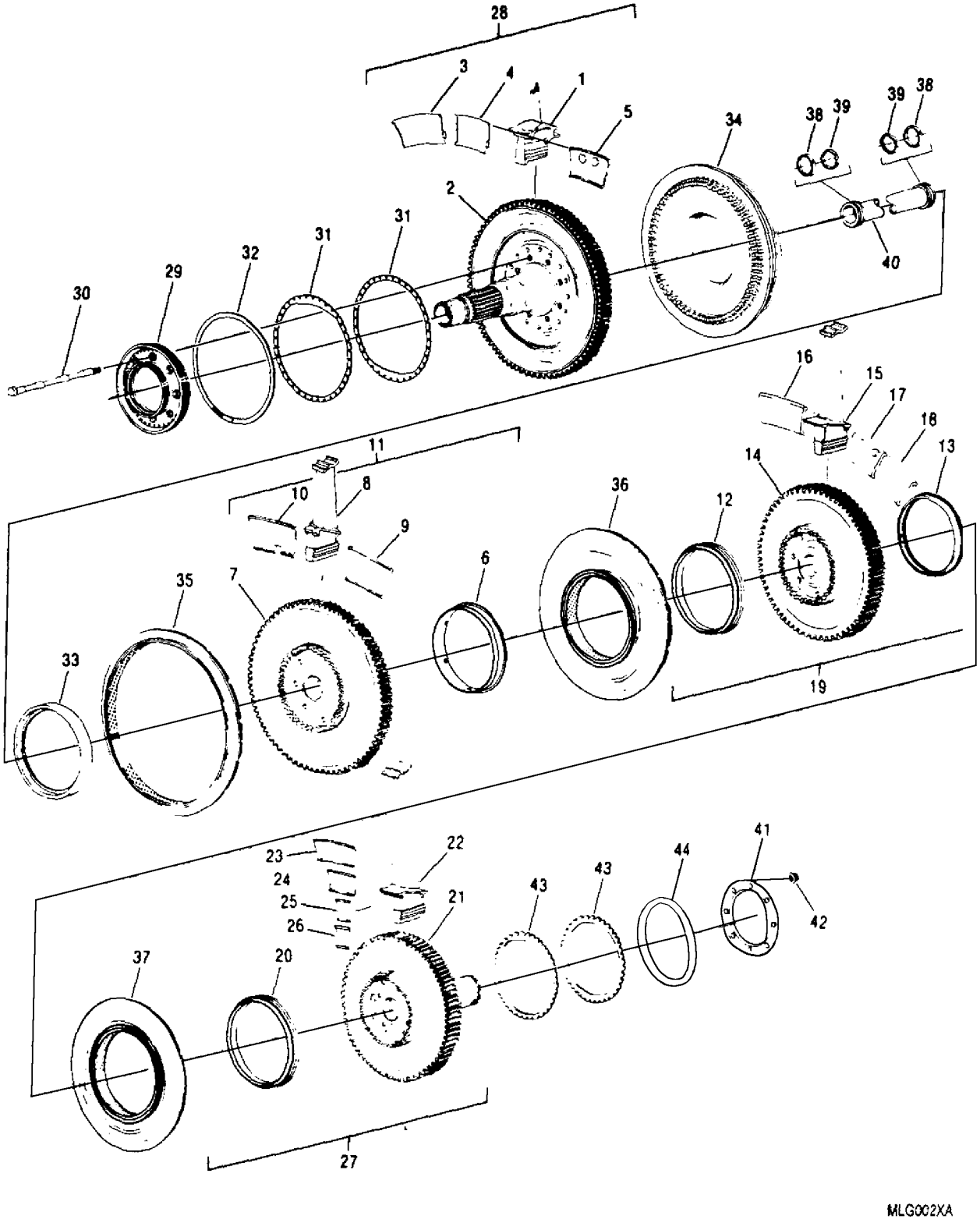

Figure 2. Turbine Rotor Assembly Parts

1. First–Stage Blade
2. First–Stage Wheel
3. First–Stage Cover Plate, Three Span
4. First–Stage Cover Plate, Two Span
5. First stage Smash Cover Plate
6. Second– To Third–Stage Forward Labyrinth Seal Assembly
7. Second–Stage Wheel
8. Second–Stage Blade
9. Second–Stage Cover Plate, Five Span
10. Second–Stage Cover Plate, Four Span
11. Second–Stage Wheel Assembly
12. Second– to Third–Stage Aft Labyrinth Seal Assy
13. Third– to Fourth–Stage Forward Labyrinth Seal Assembly
14. Third–Stage Wheel
15. Third–Stage Blade
16. Third–Stage Cover Plate, Four Span
17. Third–Stage Smash Cover Plate, Two Span
18. Third–Stage Cover Plate, Two Span
19. Third–Stage Wheel Assembly
20. Third– to Fourth–Stage Aft Labyrinth Seal Assembly
21. Fourth–Stage Wheel
22. Fourth–Stage Blade
23. Fourth–Stage Cover Plate, Four Span
24. Fourth–Stage Cover Plate, Three Span
25. Fourth–Stage Smash Cover Plate, Two Span
26. Fourth–Stage Cover Plate, Two Span
27. Fourth–Stage Wheel Assembly
28. First–Stage Wheel Assembly
29. Front Labyrinth Seal
30. Clamp Bolt
31. Forward Balance Ring
32. Internal Retaining Ring
33. Curvic Seal Ring
34. First– to Second–Stage Spacer Assembly
35. Second–Stage Vane Seal Support
36. Second– to Third–Stage Interstage Seal Support Assembly
37. Third– to Fourth–Stage Interstage Seal Support
38. Seal Ring
39. Seal Ring Expander
40. Vent Tube
41. Aft Rotor Spacer
42. Nut
43. Aft Balance Rings
44. Internal Retaining Ring

Figure 2. Turbine Rotor Assembly Parts (Sheet 2 of 2)

f. Layout blades in order according to weight.

NOTE

The following detail dash numbers are sub–assemblies of the 23033018 turbine blade assembly fixture.

g. Install detail–9 ring support onto the 6799627 fixture.

h. Install 6799627–19 spacer in center of 6799627 fixture.

i. Install detail–6 bushing into center of wheel.

j. Place second–stage wheel onto fixture front side up.

k. Install blades into wheel as follows:

(1) Turn knurled knob on the fixture and raise the wheel 0.250 in. above detail–9 support ring.

(2) Install blades into wheel using proper weight sequence as shown in figure 4.

(3) After all blades are installed, place detail–8 pressure ring on the top of blades.

(4) Raise wheel by turning knurled knob on fixture while tapping on detail–8 pressure ring until all blades are fully in wheel.

(5) Remove detail–8 pressure ring from wheel.

l. Install second–stage cover plates as follows:

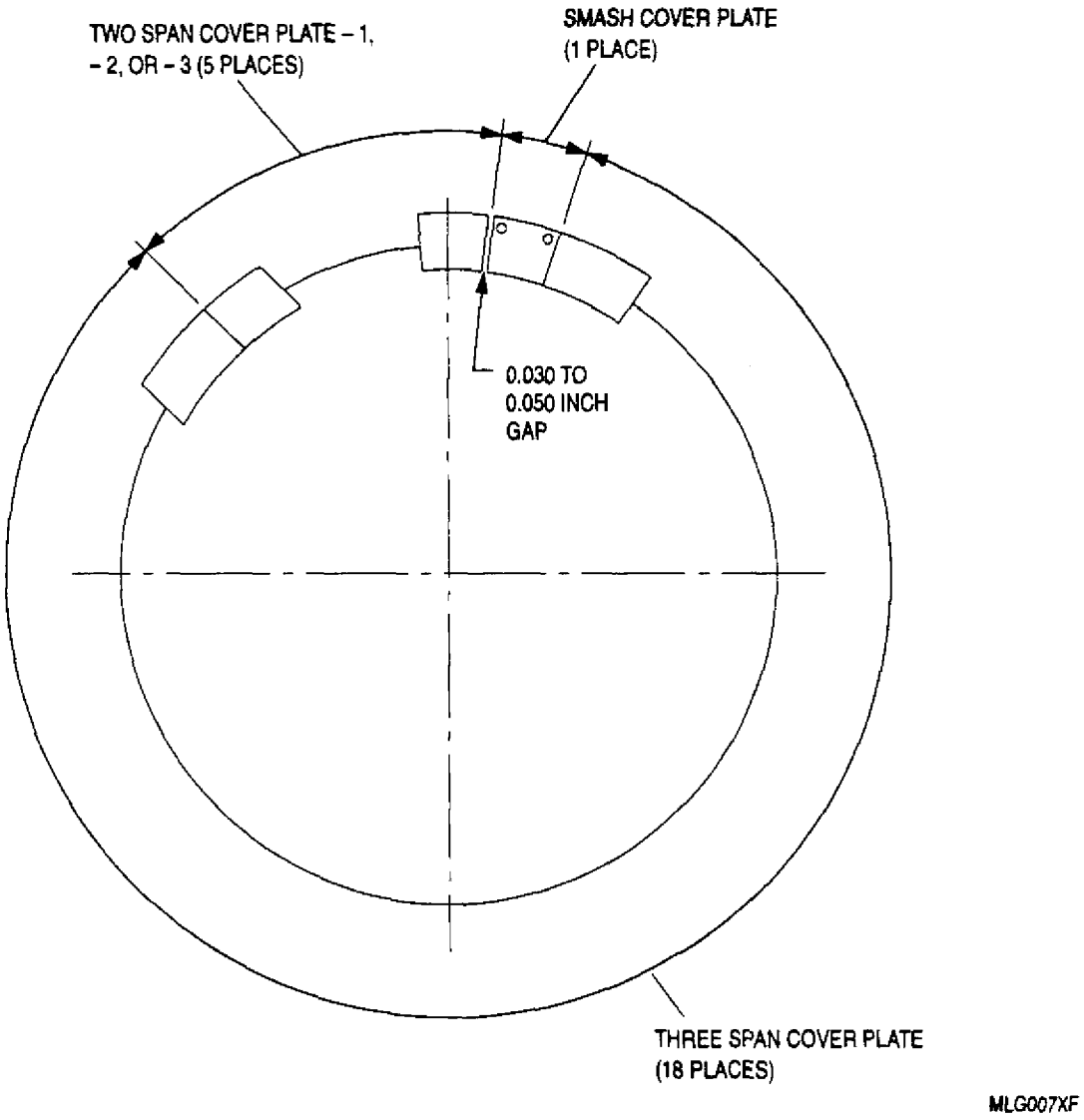

Figure 3. First Stage Cover Plate Location

NOTE

No blade movement is required for cover plate installation.

(1) Install second−stage cover plates (five span) (9) on second−stage wheel (7) according to sequence in figure 5.

(2) Install second−stage cover plate (four span) (10, figure 2) in wheel slot.

(3) Obtain 0.030−0.050 in. gap as shown in figure 5.

(4) Secure cover plates to wheel using MIL−T−23397 tape.

(5) Remove second−stage wheel assembly (11, figure 2) from fixture.

(6) Remove detail−6 bushing from wheel.

(7) Install curvic protector.

7. TURBINE ROTOR ASSEMBLY − BLADE AND SEAL INSTALLATION (THIRD−STAGE).

Support Equipment Required

Part No./Type Designation	Nomenclature
23033018	Fixture, turbine blade assembly
23034283	Support, turbine wheel
23034296	Drift, inner seal installation
6799627	Fixture, blade assembly

Materials Required

Specification No./Part No.	Nomenclature
Berol 753	Pencil
23032505	Cover plate, smash
23032515	Cover plate, four span
23032516−1, −2, or −3	Cover plate, four span

a. Heat second− to third−stage aft labyrinth seal assembly (12, figure 2) and third− to fourth−stage forward labyrinth seal assembly (13) to 300°F (149°C) for 15−20 minutes.

b. Install third−stage wheel (14) on 23034283 support, forward side up.

WARNING

Heated parts will cause skin damage (burns). Use clean insulated gloves to handle parts.

c. Remove second− to third−stage aft labyrinth seal assembly from oven and install on wheel, knife edges down.

d. Install 23034296 drift onto labyrinth seal and apply sufficient pressure to properly seat seal.

e. Remove wheel from support, turn wheel over and reinstall onto support.

f. Remove third− to fourth−stage forward seal assembly from oven and install on wheel, knife edges up.

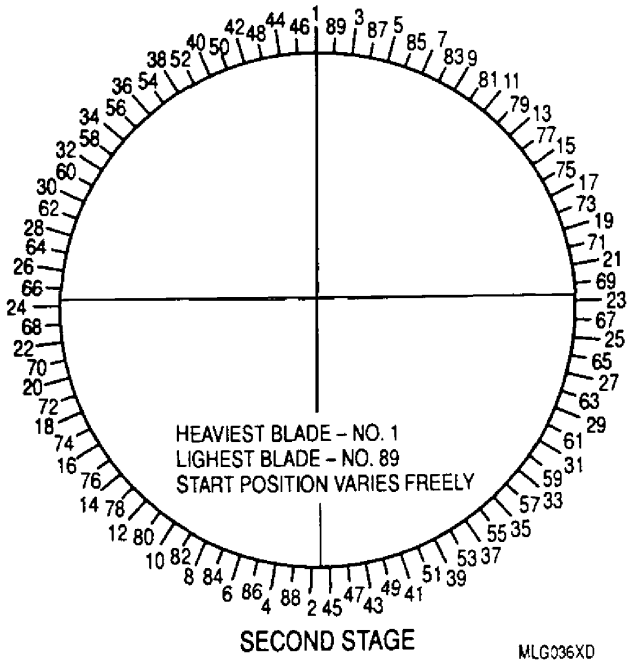

Figure 4. Blade Location

g. Install 23034296 drift onto labyrinth seal and apply sufficient pressure to properly seat seal.

h. Weigh blades (15) to the nearest 0.10 gram and mark weight on each blade using a Berol 753 pencil.

i. Layout blades according to weight.

NOTE

The following detail dash numbers are sub−assemblies of the 23033018 turbine blade assembly fixture.

j. Install detail−10 onto the 6799627 fixture.

k. Install 6799627−19 spacer into center of fixture.

l. Install detail−6 busing into center of wheel.

m. Place third−stage wheel onto fixture, aft side up.

n. Install blades in wheel as follows:

(1) Turn knurled knob on fixture and raise wheel 0.250 in. above detail−10 support.

(2) Install blades into wheel using proper weight sequence as shown in figure 6.

(3) After all blades are installed, place detail −7 pressure ring on top of blades.

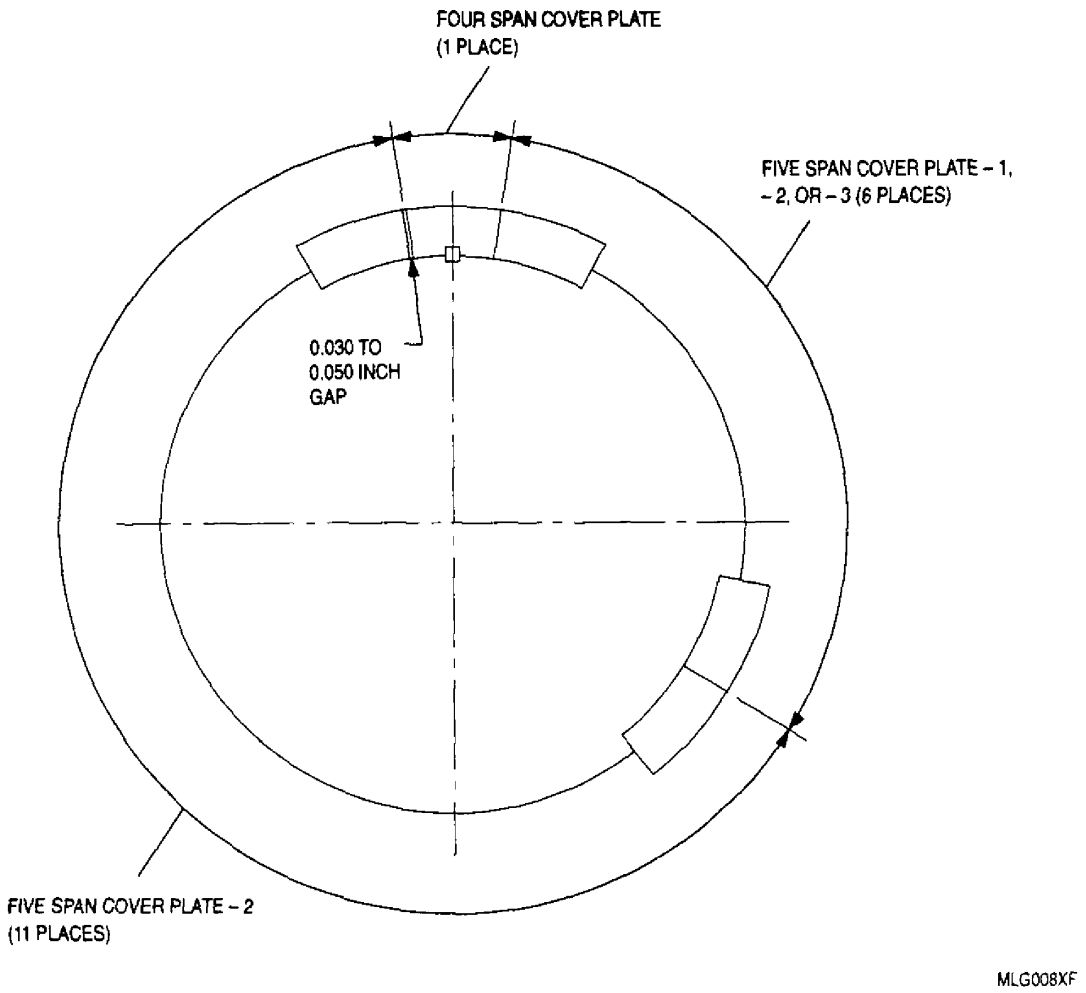

Figure 5. Second Stage Cover Plate Location

(4) Raise wheel by turning knurled knob on fixture while tapping on detail−7 pressure ring until all blades are fully in wheel.

(5) Remove pressure ring from wheel.

o. Install third−stage cover plates (four span) (16, figure 2), third−stage smash cover plates (17), and third−stage cover plates (two span) (18) as follows:

(1) Remove third−stage wheel assembly (19) from fixture and place on work table, front side down.

(2) Move a minimum of six blades aft 0.020 in. to allow access to cover plate slots.

(3) Install third−stage cover plates (four span) (16) on wheel according to sequence in figure 7.

(4) Install third−stage cover plates (two span) (18, figure 2) and third−stage smash cover plates (17) in wheel slot.

NOTE

Obtain total gap by installing smaller or larger plates as required prior to pressing plate.

(5) Obtain a gap of 0.015 − 0.035 in. two places as shown in figure 7 with all retaining plates installed and pushed outward to take up radial clearance and pushed around to close all end gaps.

NOTE

Smash cover plates will be fully pressed after balance check.

(6) Press smash cover plates enough to engage plates into slot.

(7) Remove detail−6 bushing from center of wheel.

(8) Install curvic protector.

8. TURBINE ROTOR ASSEMBLY − BLADE AND SEAL INSTALLATION (FOURTH−STAGE).

Support Equipment Required

Part No./Type Designation	Nomenclature
23033018	Fixture, turbine blade assembly
23034296	Drift, inner seal installation
23034283	Support, turbine wheel
6799627	Fixture, blade assembly

Materials Required

Specification No./Part No.	Nomenclature
Berol 753	Pencil
23032519	Cover plate, four span
23032520	Cover plate, three span
23032521−1, −2, or −3	Cover plate, two span
23032525	Cover Plate, smash

a. Heat third− to fourth−stage aft labyrinth seal assembly (20, figure 2) in oven to 300°F (149°C) for 15−20 minutes.

NOTE

The following detail dash numbers are sub−assemblies of the 23033018 turbine blade assembly fixture.

b. Install detail−1 pilot into center of fourth−stage wheel (21).

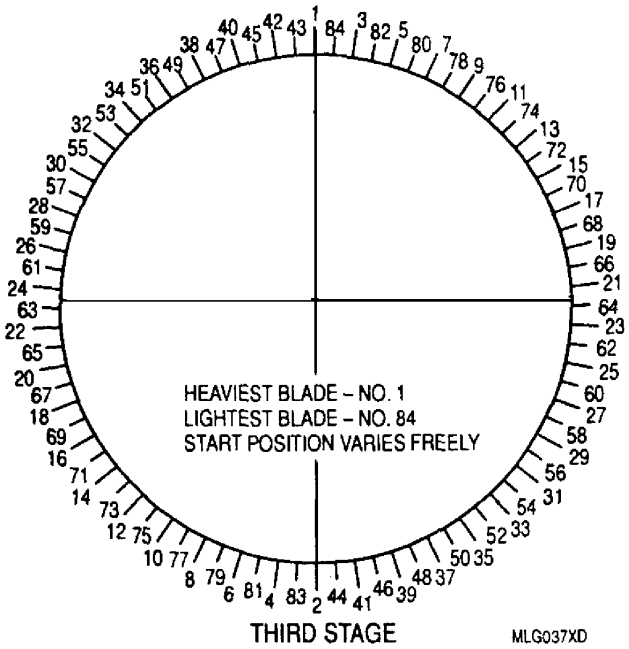

Figure 6. Blade Location

c. Install detail−11 onto 6799627 fixture.

d. Install fourth−stage wheel into 6799627 fixture engaging detail−1 pilot into center of fixture.

WARNING

Heated parts will cause skin damage (burns)
Use clean insulated gloves to handle parts.

e. Remove third−to fourth−stage aft labyrinth seal assembly from oven and install on fourth−stage wheel, knife seals down.

f. Install 23034296 drift onto the labyrinth seal and apply sufficient pressure to properly seat seal.

g. Weigh blades to the nearest 0.10 gram and mark weight on each blade using a Berol 753 pencil.

h. Layout blades according to weight.

i. Install blades as follows:

(1) Turn knurled knob on fixture and raise wheel 0.250 in. above detail−11 ring.

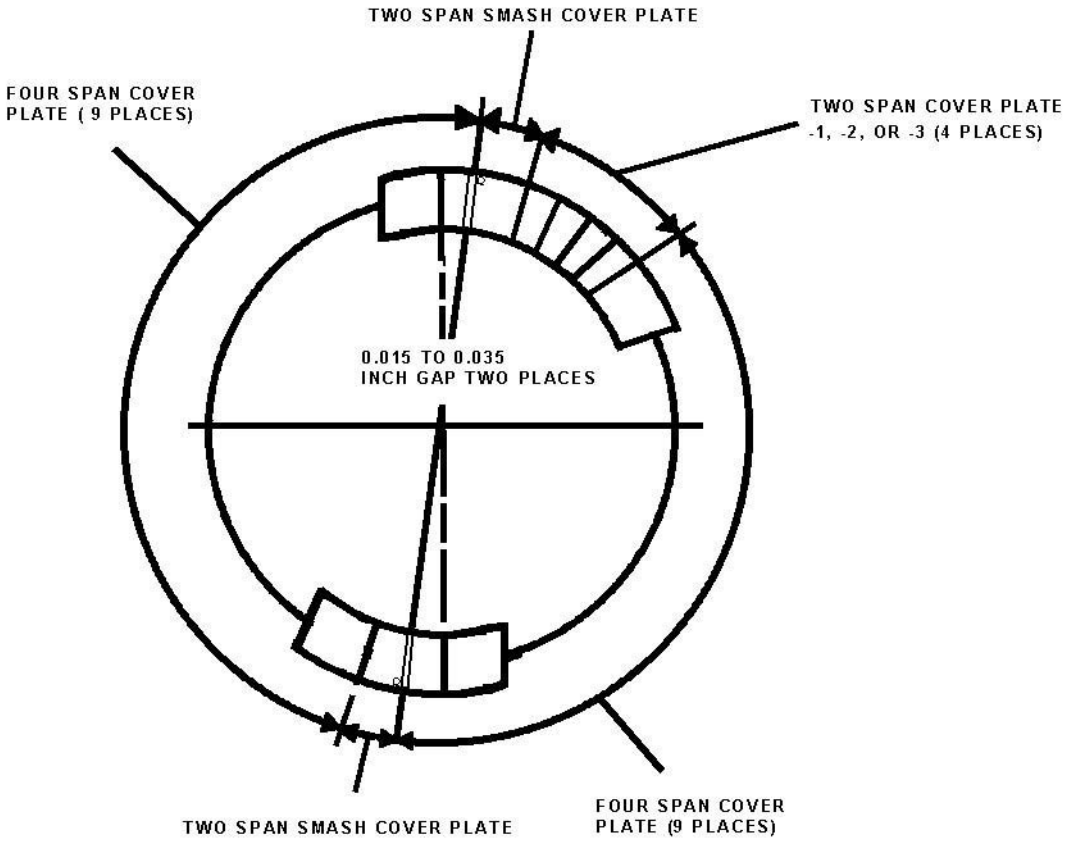

Figure 7. Third Stage Cover Plate Location

(2) Install blades (22) into wheel using proper weight sequence as shown in figure 8.

(3) After all blades are installed place detail–5 pressure ring on top of blades.

(4) Raise wheel by turning knurled knob on fixture while taping on pressure ring until blades are fully in wheel.

(5) Remove pressure ring from wheel.

j. Install fourth–stage cover plates (two span) (26, figure 2), fourth–stage cover plates (four span) (23), fourth–stage cover plates (three span) (24), and fourth–stage smash cover plates (25) as follows:

(1) Move a minimum of 6 blades 0.010 in. aft to allow access to cover plate slot.

(2) Install fourth–stage cover plates (four span) (23) on wheel according to sequence in figure 9.

(3) Install fourth–stage cover plates (three span) (24, figure 2) on wheel according to the sequence in figure 9.

(4) Install fourth–stage cover plates (two span) (26, figure 2) and fourth–stage smash cover plates (25) in wheel slot.

(5) Move cover plates using a soft drift and obtain an end gap of 0.015 – 0.035 in. as shown in figure 9.

NOTE

Smash cover plates will be fully pressed after final balancing.

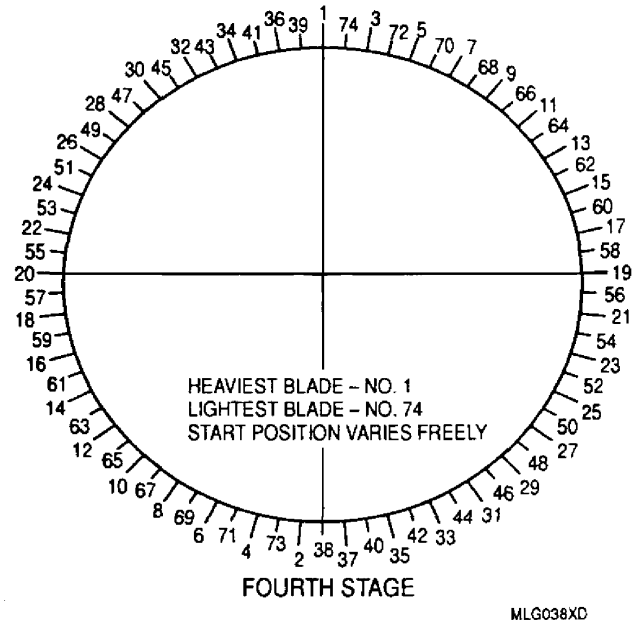

Figure 8. Blade Location

(6) Press smash cover plates enough to engage them in the slot.

(7) Remove fourth–stage wheel assembly (27, figure 2) from fixture.

(8) Remove detail–1 pilot from wheel assembly.

(9) Install curvic protector.

9. TURBINE ROTOR ASSEMBLY – BLADE TIP RADIUS INSPECTION.

Support Equipment Required

Part No./Type Designation	Nomenclature
6799718	Fixture, inspection, turbine wheel
23034325	Kit, inspection, turbine wheel assemblies

a. Blade tip radius is checked with 6799718 inspection fixture (figure 10) and 23034325 inspection kit (figure 11).

b. Position 6799718–203 and –204 indicator bracket and post assemblies on the 6799718–201 plate assembly.

NOTE

The second– and third–stage turbine wheel assemblies have shrouded blade tips with two seal lips each. The lips are identified as forward (FWD) and AFT.

c. Select 23034325 height set gage from table 1 for wheel assembly being checked. Position height set gauge under indicator bracket.

d. Position 6799718–14 nest block and 6799718–15 work support (second–, third–, and fourth–stage) or 6799718–16 work support (first–stage) on plate assembly.

e. Select 23034325 radius set gauge from table 1 for wheel assembly being checked and position on 6799718–11 support with 23034325–15 thumb screw.

f. Position dial indicator point against other end of radius set gauge and zero dial indicator.

g. Remove radius set gauge and support.

h. Position wheel assemblies on nest block and work support as follows:

(1) First–stage wheel assembly: Position aft side down.

(2) Second–, third–, and fourth–stage wheel assemblies: Position forward side down.

i. Position indicator against blade and slowly rotate wheel assembly. Record blade tip radius for each blade and compute average blade tip radius for wheel assembly.

j. Refer to blade tip radius limits in table 2. Any blade below minimum WHEEL ASSEMBLY RANGE shall be condemned. Any wheel assembly below minimum WHEEL ASSEMBLY AVERAGE shall be condemned.

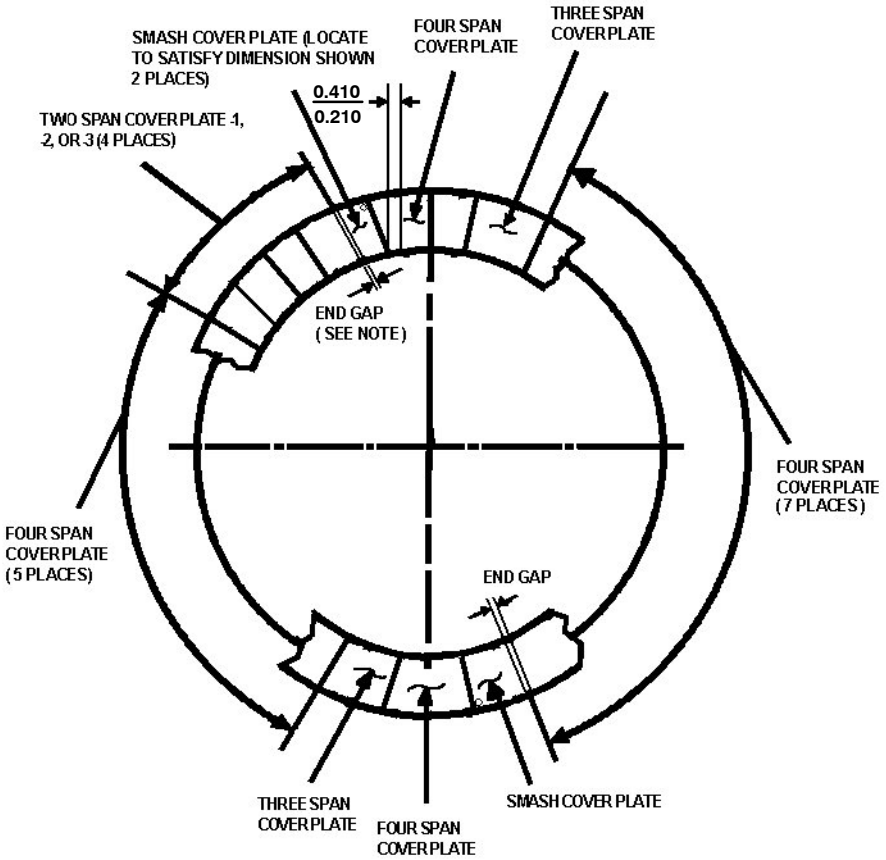

NOTE

0.015 – 0.035 END GAP (2 PLACES) WITH ALL RETAINING PLATES PUSHED OUTWARD TO TAKE UP RADIAL CLEARANCE AND PUSHED AROUND TO CLOSE ALL END GAPS. OBTAIN TOTAL GAP BY INSTALLING LARGER OR SMALLER TWO SPAN COVER PLATES AS REQUIRED PRIOR TO PRESSING SMASH COVER PLATES FLAT.

Figure 9. Fourth Stage Cover Plate Location

Table 1. 23034325 Height and Radius Set Gauges

Stage	Height Set Gauge	Radius Set Gauge
First	−7	−2
Second AFT	−8	−3
Second FWD	−9	−3
Third AFT	−10	−4
Third FWD	−11	−5
Fourth	−12	−6

Table 2. Blade Tip Radius Limits

Stage	Wheel Assembly Range (in.)	Wheel Assembly Average (in.)
First	9.228−9.242	9.230−9.242
Second AFT	9.700−9.719	9.707−9.719
Second FWD	9.700−9.719	9.707−9.719
Third AFT	10.160−10.175	10.165−10.175
Third FWD	10.120−10.135	10.125−10.135
Fourth	10.515−10.535	10.520−10.530

10. TURBINE ROTOR ASSEMBLY − WHEEL ASSEMBLY BALANCING.

Support Equipment Required

Part No./Type Designation	Nomenclature
VE3L	Balance machine, Schenck−Trebel
23034358	Adapter, support, static balance
23008653	Adapter, set−curvic, turbine wheel static balance

Materials Required

Specification No./Part No.	Nomenclature
Berol	Ink, black

a. Install 23034358 adapter support on VE3L Schenck Trebel balance machine.

b. Install 23008653−1 curvic adapter on adapter support.

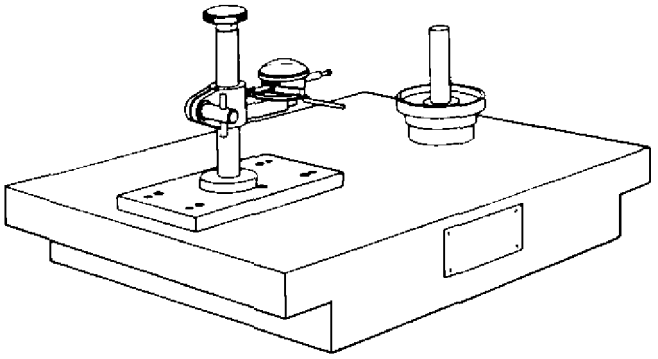

ZZT446XJ

Figure 10. 6799718 Turbine Wheel Assembly Inspection Fixture

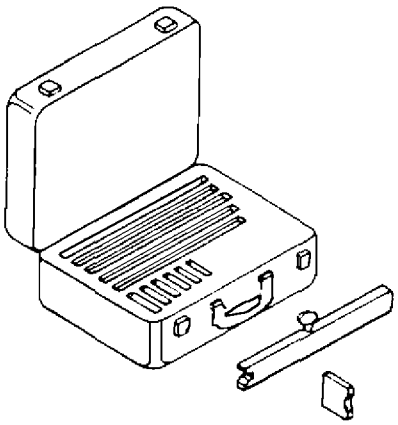

ZZT671XJ

Figure 11. 23034325 Turbine Wheel Assembly Inspection Kit

NOTE

Use 23008653−1 curvic adapter for first−, second−, and third−stage wheel and −2 for fourth− stage.

c. Install first−stage wheel assembly (28, figure 2) on curvic adapter and secure with hold down knob.

d. Check balance first−, second−, third−, and fourth−stage turbine wheels, as in step c, within 50 gram in. To obtain specified wheel balance, select blades by weight and interchange.

e. Mark heavy spot on wheel with Berol black ink.

f. Press all smash cover plates on first−, second−, third− and fourth−stage wheels flat to 0.020 in. above surrounding plates.

11. TURBINE ROTOR ASSEMBLY − ASSEMBLY.

12. Front Labyrinth Seal and Balance Plate Installation.

Support Equipment Required

Part No./Type Designation	Nomenclature
23033017	Protector, curvic
23034290	Fixture, turbine rotor assembly

Materials Required

Specification No./Part No.	Nomenclature
MIL−A−907	Compound, thread, anti−seize
——	Gloves, insulated

a. Heat front labyrinth seal (29, figure 2) to 400°F (204°C) for 30 minutes.

WARNING

Heated parts will cause skin damage (burns). Use clean insulated gloves to handle parts.

b. Remove front labyrinth seal from oven and install on the first stage wheel.

c. Install two clamp bolts (30) thru labyrinth seal and wheel to ensure alignment of labyrinth seal to wheel.

d. Remove clamp bolts when labyrinth seal is secure.

e. Install forward balance rings (31) on the forward side of wheel, indexing heavy sections 180° apart.

f. Secure balance rings with internal retaining ring (32).

g. Install clamp bolts into first−stage wheel with the bolt head flats installed properly within the forward labyrinth seal.

h. Place a 23033017 curvic spline protector around the clamp bolts at the threaded end to secure bolts until wheel is placed in fixture.

i. Place first−stage wheel assembly in 23034290 turbine rotor handling fixture. Engage bolt heads in fixture slots (figure 12).

j. Remove curvic protector holding bolts.

k. Place curvic seal ring (33, figure 2) in grove outboard of first curvic.

Compound, thread, anti−seize MIL−A−907 59

(1) Apply MIL−A−907 antiseize to bolt mutes.

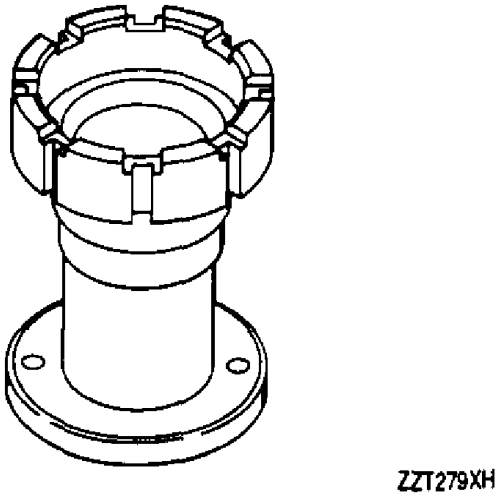

Figure 12. 23034290 Turbine Rotor Holding Fixture

13. First− to Second−Stage Spacer Assembly Installation.

Materials Required

Specification No./Part No.	Nomenclature
——	Press (4000 lb)

a. Install first− to second−stage spacer (34, figure 2) on second−stage wheel as follows:

Dry Ice, BB−C−104 56

(1) Chill first−to second−stage spacer until frost appears on spacer.

(2) Place the second−stage wheel assembly on bench with cover plates up.

NOTE

When second−stage vane seal support is installed on spacer assembly the slots will be toward the second−stage blades.

(3) Place second−stage vane seal support (35) on spacer assembly with slots up.

(4) Place vane seal and spacer assembly on second−stage wheel aligning slot in spacer with lug in wheel.

(5) Check spacer for proper seating.

(6) Place assembly in press and apply a 4000 lb. load until temperature stabilizes to ensure seating.

(7) Ensure flatness of spacer after temperature has stabilized.

(8) Place second−stage wheel assembly on first−stage wheel assembly, indexing the heavy marks 180° apart.

(9) Engage curvic splines and curvic seal ring between the two wheels.

14. Third−Stage Wheel Installation.

a. Place second− to third−stage interstage seal support assembly (36, figure 2) on second−stage wheel with slots to rear (facing up).

b. Place third−stage wheel on second−stage wheel, indexing heavy marks 180° apart.

c. Ensure curvic splines engage between wheels.

15. Fourth−Stage Wheel Installation.

Materials Required

Specification No./Part No.	Nomenclature
MIL−A−907	Compound, thread, anti−seize
Berol 753	Pencil

a. Place third− to fourth−stage interstage seal support (37, figure 2) on third−stage wheel assembly with slots to rear (facing up).

Compound, thread, anti−seize MIL−A−907 59

b. Apply MIL−A−907 antiseize to seal rings (38) and seal ring expanders (39).

NOTE

Ensure seal ring beveled edges are pointing outboard of vent tube and open ends of seal rings and expanders are 180° apart.

c. Install expanders and rings on to vent tube (40).

d. Install vent tube assembly into I.D. of the first–stage wheel assembly.

e. Place fourth–stage wheel assembly on third–stage wheel assembly, indexing heavy marks 180° apart.

f. Ensure curvic splines are engaged.

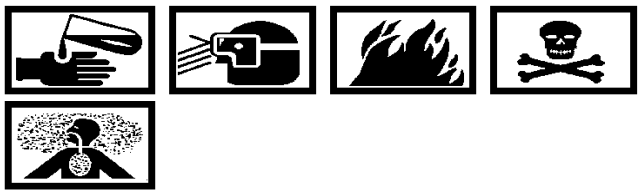

Compound, thread, anti–seize MIL–A–907 59

g. Apply MIL–A–907 antiseize to clamp bolt threads and surface of aft rotor spacer (41) under the nuts (42).

h. Install aft rotor spacer (41) and secure with nuts (42). Tighten nuts finger tight.

i. Number each clamp bolt with Berol 753 pencil for torquing sequence (figure 13).

j. Install aft balance rings (43, figure 2) in aft groove of fourth–stage wheel, indexing heavy marks 180° apart.

k. Secure balance rings with internal retaining ring (44).

16. TURBINE ROTOR ASSEMBLY – CLAMP BOLT MEASUREMENT.

Support Equipment Required

Part No./Type Designation	Nomenclature
23034327	Measurement Gage, Clamp Bolt
——	Wrench, torque (0–100 lb in.)
——	Wrench, torque (0–600 lb in.)

a. Measure clamp bolt stretch as follows:

(1) Install detail–9 base in holding vise.

(2) Insert detail–7 post into base.

(3) Install 23034327 measurement gage onto post.

(4) Zero dial indicator against post to establish measurement standard.

(5) Ensure the clamp bolt heads are properly seated against forward labyrinth seal.

(6) Install measurement gage on first clamp bolt (figure 14).

(7) Record free state measurement of clamp bolts.

(8) Torque nuts to 100 lb in. (8.3 lb ft) per sequence shown in figure 13. Continue torquing nuts in sequence until 100 lb. in. (8.3 lb ft) is achieved on all nuts.

(9) Torque nuts to 150 lb in. (12.5 lb ft) per sequence shown in figure 13. Continue torquing nuts in sequence until 150 lb. in. (12.5 lb ft) is achieved on all nuts.

(10) Repeat step (9) one time. After reapeating step (9) go to step (11).

(11) Torque nuts to 200 lb in. (16.7 lb ft) per sequence shown in figure 13. Continue torquing nuts in sequence until 200 lb in. (16.7 lb ft) is achieved on all nuts.

(12) Repeat step (11) one time. After reapeating step (11) go to step (13).

(13) Torque nuts to 250 lb in. (20.8 lb ft) per sequence shown in figure 13. Continue torquing nuts in sequence until 250 lb in. (20.8 lb ft) is achieved on all nuts.

(14) Repeat step (13) one time. After reapeating step (13) go to step (15).

(15) Torque nuts to 300 lb in. (25 lb ft) per sequence shown in figure 13. Continue torquing nuts in sequence until 300 lb in. (25 lb ft) is achieved on all nuts.

(16) Repeat step (15) one time. After reapeating step (15) go to step (17).

(17) Install measurement gage on first clamp bolt.

CAUTION

Overall torque tolerance is 0.0165–0.0185 in. greater than free state bolt length.

If stretch limit is exceeded, loosen nut and reapply torque until correct stretch tolerance is met.

Do not exceed 540 lb in. (45 lb ft) of torque.

(18) Torque nuts to achieve a 0.0165 – 0.0185 in. stretch on bolts greater than the free state measurement. Continue torquing until the 0.0165 – 0.0185 in. stretch on bolts greater than the free–state measurement is achieved on all botls. Do not exceed 540 lb in. (45 lb ft). This will allow minor adjustments and better overall runout measurements.

(19) Repeat step (18) one time.

17. TURBINE ROTOR ASSEMBLY − ROTOR RUNOUT AND STACK DIMENSION INSPECTION.

Support Equipment Required

Part No./Type Designation	Nomenclature
23034314	Support, checking, turbine rotor
23032975	Sling, turbine
6799619	Adapter, front turbine lift
6798009	Fixture, turbine rotor inspection
6796836	Stand, transportation and storage

a. Install 6796836−202 lift adapter on rear of turbine.

b. Lift turbine with hoist.

c. Install 6799619 front lift adapter on front of turbine.

d. Place turbine rotor into 6796836 transportation and storage stand.

e. Detach hoist from rear of turbine rotor and attach hoist to front of rotor.

f. Lift rotor and remove rear lift adapter.

g. Install rotor into 23034314 checking support.

CAUTION

If Dimension C is larger than the combined Dimension of D, E, F, and G previously taken, stop and inspect rotor for improper assembly.

h. Check rotor Dimension C (figure 1).

i. Remove rotor from checking support with hoist.

j. Install rear lifting adapter on rear of rotor.

k. Install rotor into transportation and storage stand.

l. Place 23032975 lift sling around rotor and attach to hoist.

m. Lift rotor and remove front and rear lifting adapters.

n. Place rotor into 6798009 inspection fixture.

o. Check runout as follows:

(1) Check ball pilot diameter concentricity, Diameter H, at the front end of the first−stage wheel hub. This diameter must be concentric with axis established by Diameters A and B within 0.0005 in. (figure 1).

CAUTION

Overall torque tolerance is 0.0165−0.0185 in. greater than free state bolt length.

If stretch limit is exceeded, loosen nut and reapply torque until correct stretch tolerance is met.

Do not exceed 540 lb in. of torque.

(2) Adjust torque on clamp bolt nuts if necessary to achieve runout.

(3) Recheck bolt stretch if nut torque was adjusted.

(4) Check blade tip radius on all stages.

p. Install lift sling on rotor and lift rotor from fixture.

q. Dynamic balance as follows:

(1) Install drive chuck into hub of fourth−stage wheel and tighten bolt on the chuck until chuck is securely held in the hub.

(2) Slide each of the interstage seals toward the first−stage wheel.

(3) Move the levers on the fixture so the tangs are retracted.

(4) Lower rotor into fixture so the drive chuck rests against the two wood locaters.

(5) Ensure that the rotor bearing journals are fully seated against the fixture rollers.

(6) Position seal panels to the left until tangs can be activated and panels are secure.

(7) Install drive adapter to drive chuck and install internal wrenching screws with alien wrench provided.

(8) Slide wood locaters away from drive chuck.

(9) Lower and lock safety hold−downs.

(10) While turning rotor, loosen black locking knobs and adjust chrome knobs until seals no longer rub.

(11) Tighten black locking knobs when rubbing stops.

(12) Lower safety hood over drive adapter and hood over turbine rotor.

(13) Spin rotor at 200 rpm while making adjustments to chrome knobs to eliminate seal rub.

(14) Balance rotor within 0.225 oz. in. by shifting balance rings on either end of rotor.

(15) Remove rotor from balance machine.

(16) Place turbine rotor into transportation and storage stand until ready for use.

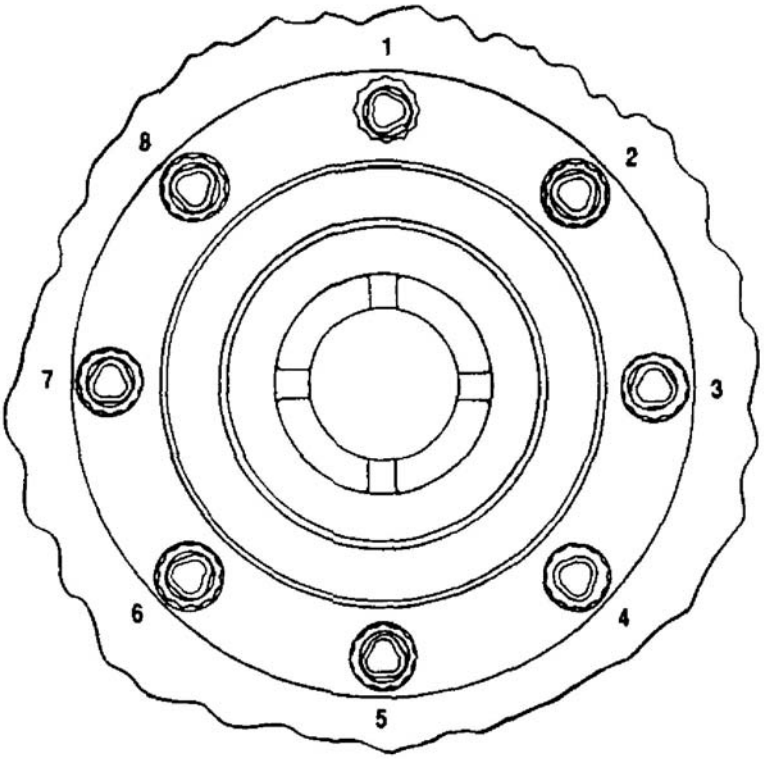

CLAMP BOLT POSITIONS

TORQUING SEQUENCE 1, 5, 3, 7, 2, 6, 8, 4

TORQUE VALUES:

FIRST TORQUING:	100 LB IN (8.3 LB FT).
SECOND TORQUING:	150 LB IN (12.5 LB FT). PERFORM TWICE.
THIRD TORQUING:	200 LB IN (16.7 LB FT). PERFORM TWICE.
FORTH TORQUING:	250 LB IN (20.8 LB FT). PERFORM TWICE.
FIFTH TORQUING:	300 LB IN (25 LB FT). PERFORM TWICE.
SIXTH TORQUING:	TORQUE NUT UNTIL BOLT LENGTH IS 0.0165 TO 0.0185 INCH GREATER THAN UNTORQUED BOLT LENGTH AS MEASURED WITH MEASUREMENT GAGE 23034327. DO NOT EXCEED 540 LB IN (45 LB FT). PERFORM TWICE.

Figure 13. Clamp Bolt Torque Values and Sequence

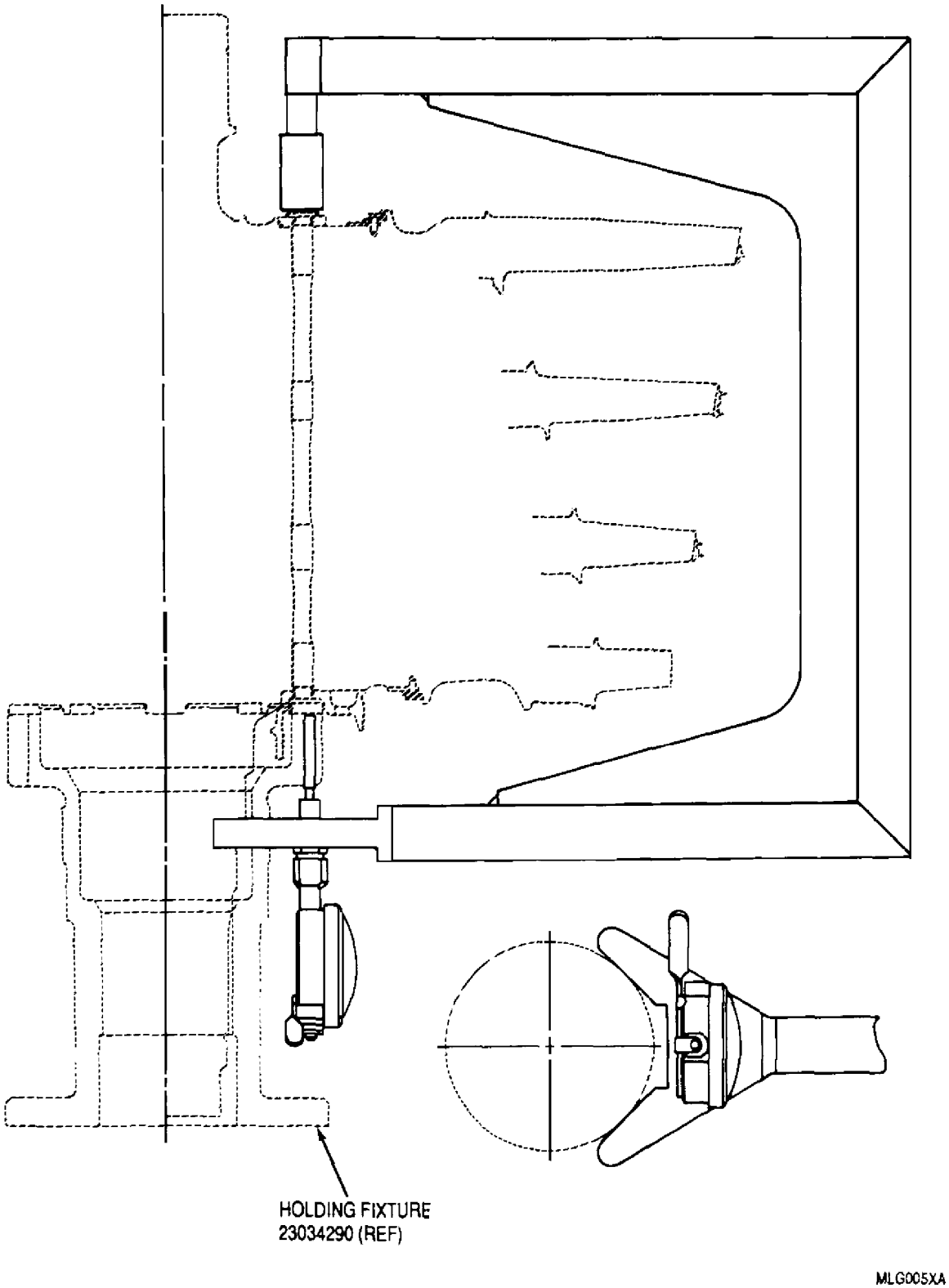

Figure 14. 23034327 Turbine Clamp Bolt Measurement Gage.

DEPOT MAINTENANCE

REMOVAL AND INSTALLATION

TORQUEMETER AND ANTI−ICING SHROUD UNIT ASSEMBLY

Reference Material

Torquemeter Housing Assembly, Bearing Lock Tube, and Bearing Outer Ring Lock Key− Inspection and Repair . . . . . WP 063 00
Torquemeter Inner and Outer Shaft Assembly − Maintenance . . . . . WP 064 00
Safety Coupling Assembly − Maintenance . . . . . WP 065 00
Torquemeter Shaft and Coupling Assembly − Dynamic Balance . . . . . WP 066 00
Maintenance . . . . . NAVAIR 02B−5DG−6−1
Torquemeter Anti−Icing Cowl Assembly − Maintenance . . . . . WP 026 00
Torquemeter Unit and Safety Coupling − Removal and Installation . . . . . WP 028 00

Alphabetical Index

Subject **Page No.**

Introduction 2
Torquemeter and Anti−Icing Shroud Unit Assembly 2
Installation 2
Torquemeter Anti−Icing Cowl Assembly 3
Torquemeter Housing Assembly, Bearing Lock Tube, Center Bearing Outer Race and Rollers, and Bearing Lock Key (Assembled Unit) 3
Torquemeter Shaft and Safety Coupling Assembly 2
Removal 2
Matched Set Component Description 2
Torquemeter Anti−Icing Cowl Assembly 2
Torquemeter Housing Assembly, Bearing Lock Tube, Center Bearing Outer Race and Rollers, and Bearing Lock Key (Assembled Unit) 2
Torquemeter Shaft and Safety Coupling Assembly 2

Record of Applicable Technical Directives

None

1. **INTRODUCTION.**

2. This work package (WP) provides the instructions for removal and installation of the torquemeter and anti−icing shroud unit assembly used on the T56−A−427 turboprop engine.

3. **TORQUEMETER AND ANTI−ICING SHROUD UNIT ASSEMBLY.**

4. TORQUEMETER AND ANTI−ICING SHROUD UNIT ASSEMBLY − REMOVAL.

5. Matched Set Component Description. Two components of the torquemeter and anti−icing shroud unit assembly are matched sets. The detail parts of these sets shall not be intermixed between like sets. The matched sets are as follows:

a. The torquemeter housing, inner shaft assembly, outer shaft assembly and safety coupling are a matched set. The module serial number shown on the torquemeter housing pickup mounting block rear face shall be marked on the torquemeter inner and outer shaft assembly and safety coupling assembly. The module serial number format is “A XXXXX”.

(1) Mark (vibro−peen) torquemeter module serial number on the forward OD of torquemeter inner shaft and outer shaft assemblies.

(2) Mark (vibro−peen) torquemeter module serial number on the tapered OD of safety coupling assembly housing.

(3) Mark (stamp) torquemeter module serial number on the torquemeter housing assembly pickup mounting block rear face.

(4) Mark (vibropeen) lines through “SET XXXX” serial numbers shown on inner shaft assembly, outer shaft assembly, and safety coupling assembly housing.

b. The center roller bearing (mid−bearing) is a matched set identified by a serial number. This is not the same as the module serial number. The serial number is located (3 places) on the bearing details as follows:

(1) Rear face of the outer ring.

(2) Rear face of the roller separator.

(3) Tapered OD of the inner ring.

6. Torquemeter Anti−Icing Cowl Assembly − Removal.

a. Remove cowl assembly. Refer to NAVAIR 02B−5DG−6−1, WP 026 00.

b. Maintenance of the cowl assembly is covered in NAVAIR 02B−5DG−6−1, WP 026 00.

7. Torquemeter Housing Assembly, Bearing Lock Tube, Center Bearing Outer Race and Rollers, and Bearing Lock Key (Assembled Unit) − Removal.

a. Remove housing assembly, lock tube, outer race and rollers, and lock key as an assembled unit. Refer to NAVAIR 02B−5DG−6−1, WP 028 00.

b. Inspection and Repair of the assembled unit is covered in WP 063 00.

8. Torquemeter Shaft and Safety Coupling Assembly − Removal.

a. Remove torquemeter shaft and safety coupling assembly. Refer to NAVAIR 02B−5DG−6−1, WP 028 00.

b. Maintenance of the torquemeter inner and outer shaft assembly is covered in WP 064 00.

c. Maintenance of the safety coupling assembly is covered in WP 065 00.

d. Dynamic balance of the torquemeter shaft and safety coupling assembly is covered in WP 066 00.

9. TORQUEMETER AND ANTI−ICING SHROUD UNIT ASSEMBLY − INSTALLATION.

CAUTION

Details of serialized matched sets shall not be intermixed between sets. Keep sets together by same serial number.

10. Torquemeter Shaft and Safety Coupling Assembly − Installation. (figure 1)

a. Before installation, check parts for proper fit limits. Refer to figure 1, Ref No. 1 and 2.

b. Install torquemeter shaft and safety coupling assembly. Refer to NAVAIR 02B−5DG−6−1, WP 028 00.

11. Torquemeter Housing Assembly, Bearing Lock Tube, Center Bearing Outer Race and Rollers, and Bearing Lock Key (Assembled Unit) − Installation.

a. Install assembled unit. Refer to NAVAIR 02B−5DG−6−1, WP 028 00.

12. Torquemeter Anti−Icing Cowl Assembly − Installation.

a. Install cowl assembly. Refer to NAVAIR 02B−5DG−6−1 , WP 026 00.

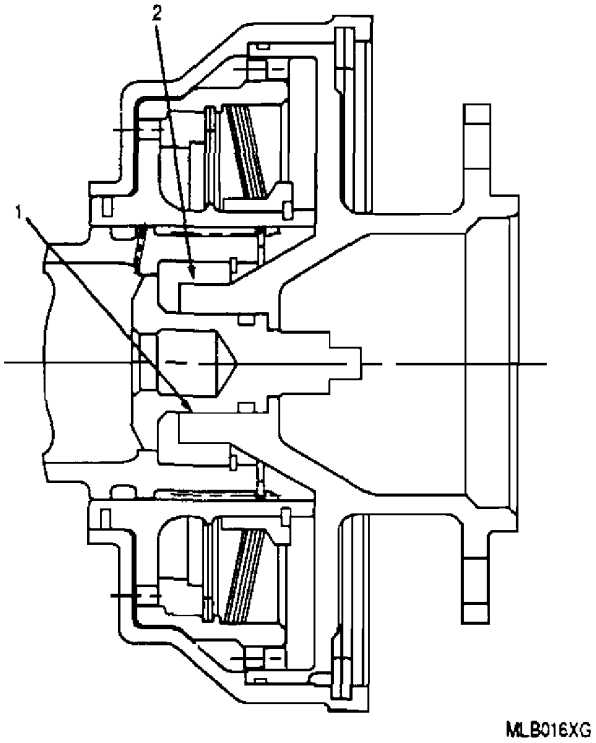

Ref No.	Description	Min.	Max.
1	Shaft OD – Outer Member ID	0.0005L	0.0035L
2	Outer Member OD – Bushing ID	0.0010L	0.0030L

Figure 1. Pinion Gear and Safety Coupling Fit Limits

DEPOT MAINTENANCE

DISASSEMBLY

REDUCTION GEAR ASSEMBLY

Reference Material

Maintenance . . . . . NAVAIR 02B−5DG−6−1
Reduction Gear Rear Housing Oil−Seals − Replacement . . . . . WP 033 00
Thrust Sensitive Signal System Actuator − Removal and Installation . . . . . WP 036 00
Reduction Gear Unit − Disassembly . . . . . WP 038 00

Alphabetical Index

Subject **Page No.**

Front Housing Assembly and Components Disassembly 12
Installation of Reduction Gear Assembly Into Turnover Stand 3
Introduction 3
Pinion Shaftgear, Main Drive Gear Assembly, Sun Gear, and Main Diaphragm Assembly Removal 4
Main Diaphragm Assembly Removal and Disassembly 4
Main Drive Gear Assembly and Sun Gear Removal 4
Pinion Shaftgear (And Bearings) Removal 4
Propeller Shaft and Planetary Gears Removal and Disassembly 4
Propeller Shaft Thrust Bearing Nut Removal 3

Alphabetical Index (contd)

Subject **Page No.**

Rear Housing and (Inner) Diaphragm Assembly and Components Disassembly 3
Alternate Hydraulic Pump Drive Idler Gear Removal 3
Alternator Drive Gear Assembly Removal 3
Cone Type Propeller Brake Assembly Removal 3
Generator Drive Shaft and Alternate Hydraulic Pump Drive Gear Removal 3
Hydraulic Pump Drive Shaft, Drive Gear, and Tachometer Drive Take−Off Gear Removal 3
Hydraulic Pump Idler Gear Removal 3
Loosening of Accessory Drive Spanner Nuts and Removal of (Inner) Diaphragm 3
Main Idler Gear Removal 3
Oil Pump Drive Idler Journal and Pump Drive Idler Gear Removal 3
Oil Pump Drive Shaft and Oil Pump Drive Gear Removal 3
Oil Seals Removal 3
Tachometer Drive Idler Gear Removal 3
Tachometer Drive Shafts and Drive Gears Removal 3
Rear Housing and (Inner) Diaphragm Assembly Removal 3

Record of Applicable Technical Directives

Type/No.	Date	Title and ECP No.	Date Inc.	Remarks
PPC−121	03 Mar 04	Redesigned Propeller Shaft Plug Installation (ECP−2129R)	01 Sep 05	

1. **INTRODUCTION.**

2. This work package (WP) provides the instructions for disassembly of the reduction gear assemblies used on T56−A−427 turboprop engine. The following major functions are included:

- Separating rear housing and (inner) diaphragm assembly from main diaphragm assembly and front housing assembly
- Disassembly of rear housing and (inner) diaphragm assembly
- Removal and disassembly of main diaphragm assembly
- Removal of propeller shaft and planetary gear assembly
- Disassembly of front housing assembly

3. **INSTALLATION OF REDUCTION GEAR ASSEMBLY INTO TURNOVER STAND.**

a. Install reduction gear assembly in 6795905 turnover stand.

b. Refer to NAVAIR 02B−5DG−6−1, WP 038 00.

4. **PROPELLER SHAFT THRUST BEARING NUT REMOVAL.**

a. Remove external component from propeller shaft.

b. Refer to NAVAIR 02B−5DG−6−1, WP 038 00.

5. **REAR HOUSING AND (INNER) DIAPHRAGM ASSEMBLY REMOVAL.**

a. Remove rear housing and (inner) diaphragm assembly from main diaphragm assembly and front housing assembly. Install in 6796987 turnover stand.

b. Refer to NAVAIR 02B−5DG−6−1, WP 038 00.

6. **REAR HOUSING AND (INNER) DIAPHRAGM ASSEMBLY AND COMPONENTS DISASSEMBLY.**

7. LOOSENING OF ACCESSORY DRIVE SPANNER NUTS AND REMOVAL OF (INNER) DIAPHRAGM. Refer to NAVAIR 02B−5DG−6−1, WP 038 00.

8. MAIN IDLER GEAR REMOVAL. Refer to NAVAIR 02B−5DG−6−1, WP 038 00.

9. CONE TYPE PROPELLER BRAKE ASSEMBLY REMOVAL. Refer to NAVAIR 02B−5DG−1, WP 038 00.

10. ALTERNATOR DRIVE GEAR ASSEMBLY REMOVAL. Refer to NAVAIR 02B−5DG−6−1, WP 043 00.

11. GENERATOR DRIVE SHAFT AND ALTERNATE HYDRAULIC PUMP DRIVE GEAR REMOVAL. Refer to NAVAIR 02B−5DG−6−1, WP 038 00.

12. HYDRAULIC PUMP DRIVE SHAFT, DRIVE GEAR AND TACHOMETER DRIVE TAKE−OFF GEAR REMOVAL. Refer to NAVAIR 02B−5DG−6−1, WP 038 00.

13. HYDRAULIC PUMP IDLER GEAR REMOVAL. Refer to NAVAIR 02B−5DG−6−1, WP 038 00.

14. ALTERNATE HYDRAULIC PUMP DRIVE IDLER GEAR REMOVAL. Refer to NAVAIR 02B−5DG−6−1, WP 038 00.

15. TACHOMETER DRIVE IDLER GEAR REMOVAL. Refer to NAVAIR 02B−5DG−6−1, WP 038 00.

16. TACHOMETER DRIVE SHAFTS AND DRIVE GEARS REMOVAL. Refer to NAVAIR 02B−5DG−6−1, WP 038 00.

17. OIL PUMP DRIVE SHAFT AND OIL PUMP DRIVE GEAR REMOVAL. Refer to NAVAIR 02B−5DG−6−1, WP 038 00.

18. OIL PUMP DRIVE IDLER JOURNAL AND PUMP DRIVE IDLER GEAR REMOVAL. Refer to NAVAIR 02B−5DG−6−1, WP 038 00.

19. OIL SEALS REMOVAL.

a. Remove oil seals at tachometer drive pads. Refer to NAVAIR 02B−5DG−6−1, WP 033 00.

b. Remove oil seals at hydraulic pump drive pads. Refer to NAVAIR 02B−5DG−6−1, WP 033 00.

c. Remove oil seal at alternator drive pad. Refer to NAVAIR 02B−5DG−6−1, WP 033 00.

d. Remove oil seal at starter drive pad. Refer to NAVAIR 02B−5DG−6−1, WP 033 00.

20. **PINION SHAFTGEAR. MAIN DRIVE GEAR ASSEMBLY, SUN GEAR, AND MAIN DIAPHRAGM ASSEMBLY REMOVAL.**

21. PINION SHAFTGEAR (AND BEARINGS) REMOVAL. Refer to NAVAIR 02B−5DG−6−1, WP 038 00.

a. Visually inspect front and rear pinion bearings during disassembly per WP 138 00.

22. MAIN DRIVE GEAR ASSEMBLY AND SUN GEAR REMOVAL. Refer to NAVAIR 02B−5DG−6−1, WP 038 00.

23. MAIN DIAPHRAGM ASSEMBLY REMOVAL AND DISASSEMBLY. Refer to NAVAIR 02B−5DG−6−1, WP 038 00.

24. **PROPELLER SHAFT AND PLANETARY GEARS REMOVAL AND DISASSEMBLY.** (figure 1)

Support Equipment Required

Part No./Type Designation	Nomenclature
SWE 102	Powerwrench
2308	Puller, tee−handle
6796010	Lift, propeller shaft and planet gear
6796014	Plate, index, planet gear
6796300	Cover, propeller shaft
6796467 or 23068568	Puller, propeller shaft plug
6796472	Puller, bearing inner race, planet rear carrier
6796561	Adapter, pivot power wrench
6796565	Pusher, planet rear carrier
6796566	Puller, planet gear and bearing
6796616	Puller, sun gear lubrication tube
6796631	Fixture, torque, power wrench
6796634	Holder, planet gear bearing journal
6796691	Retainer, bearing roller, propeller shaft
23051221 or 6796877	Puller, hydraulic, propeller shaft thrust bearing and scavenge pump drive gear
6796834	Stand, buildup, propeller shaft and planet gear
6796835	Protector, planet gear and bearing

Support Equipment Required (contd)

Part No./Type Designation	Nomenclature
6797788	Wrench, spline, planet journal rear retaining nut
6799615	Wrench, spanner nut, propeller shaft flange to rear carrier flange bolt
6799822	Wrench, spline, planet journal front retaining nut
6799823	Adapter, power wrench, planet journal rear retaining nut
6799826	Plate, support, power wrench adapter, planet journal front retaining nut
——	Gloves, insulated

Materials Required

Specification No./Part No.	Nomenclature
——	Ice, dry

Dry Ice, BB−C−104 **55**

CAUTION

Be sure the thrust sensitive system plunger is removed. If left installed, the plunger will be damaged when the propeller shaft is removed.

a. If installed, remove thrust sensitive system actuator from front housing. Refer to NAVAIR 02B−5DG−6−1, WP 036 00.

b. Check each planet gear and bearing assembly (19, figure 1) for the O−mark at the high point of pitch diameter runout. If any index mark is not visible, insert 6796014 index plate (figure 2) into the center of the planet gear and bearing assemblies with the available runout O−marks aligned. This will enable marking the high point of any gear on which such marks are not visible or legible.

c. Remove special screw assemblies (1, figure 1) (flathead screws) holding nose bearing plate (38) to front housing assembly (2).

d. Attach 6796010 propeller shaft and planet gear lift (figure 3) to threads of planet rear carrier (14, figure 1).

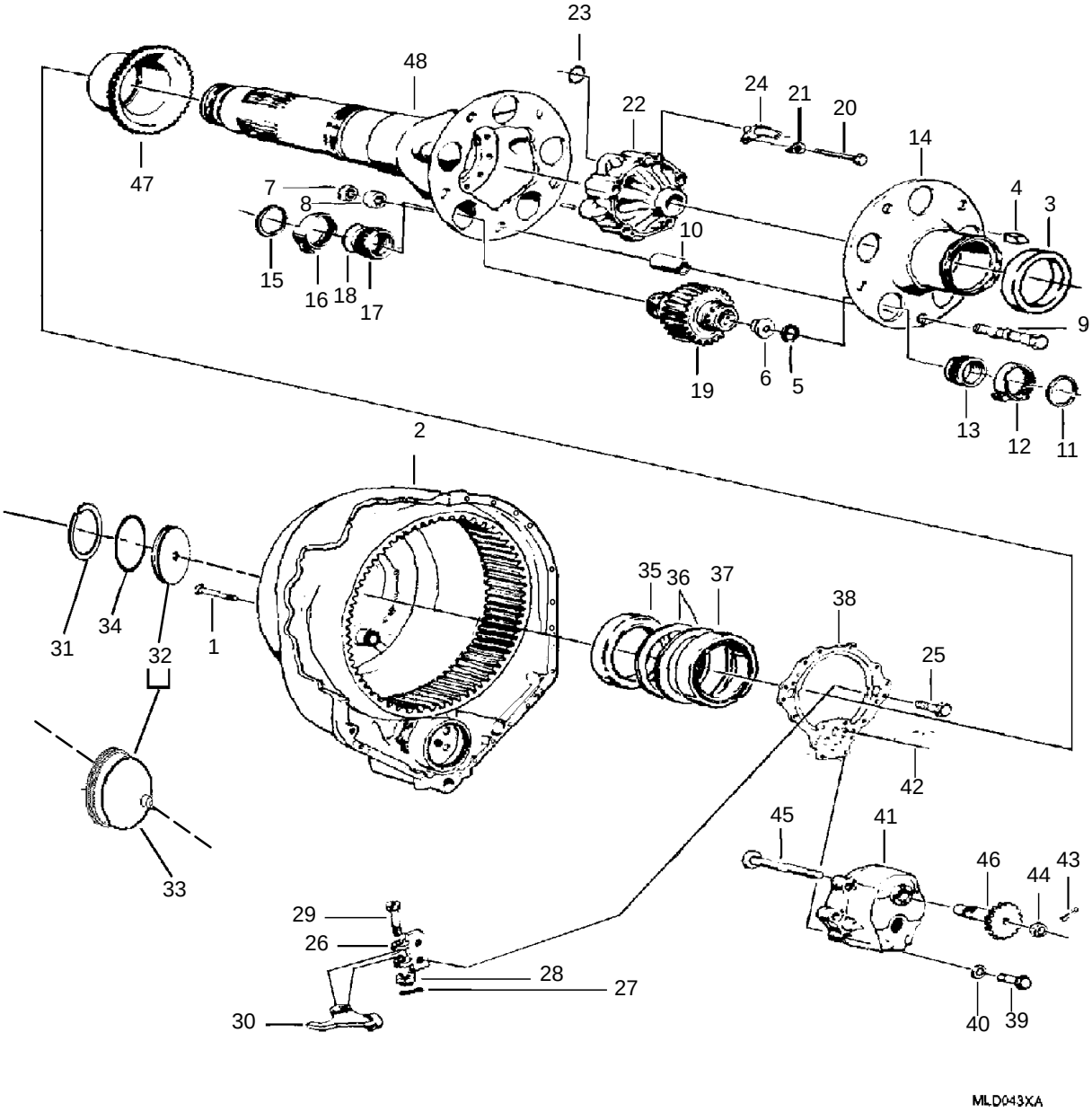

Figure 1. Propeller Shaft and Planetary Gears − Removal and Disassembly (Sheet 1 of 2)

1. Special Screw Assembly
2. Front Housing Assembly
3. Rear Carrier Front Bearing Inner Ring
4. Key
5. Internal Retaining Ring
6. Planet Journal Plug
7. End Slotted Spanner Nut
8. Cup Washers
9. Muted Bolt
10. Carrier Spacer Block
11. External Retaining Ring
12. Splined Lock
13. Planet Rear Splined Nut (RH thread)
14. Rear Carrier
15. External Retaining Ring
16. Splined Lock
17. Planet Front Splined Nut (LH thread)
18. Preformed Packing
19. Planet Gear and Bearing Assembly
20. Bolt
21. Key Washer
22. Carrier Oil Delivery Flange
23. Preformed Packing
24. Sun Gear Lube Tube Assembly
25. Bolt
26. Thrust Signal Lever Bracket
27. Cotter Pin
28. Nut
29. Screw
30. Thrust Signal Lever
31. Internal Retaining Ring
32. Propeller Shaft Plug (PPC−121 NINC)
33. Propeller Shaft Plug (PPC−121 INC)
34. Preformed Packing
35. Roller Bearing Inner Ring
36. Spring Tension Washers
37. Thrust Ball Bearing
38. Nose Bearing Plate
39. Bolt
40. Washer
41. Scavenge Pump Assembly
42. Key Assembly
43. Cotter Pin
44. Nut
45. Scavenge Pump Drive Screw
46. Scavenge Pump Drive Gear
47. Drive Gear (Scavenge Pump)
48. Propeller Shaft

Figure 1. Propeller Shaft and Planetary Gears − Removal and Disassembly (Sheet 2 of 2)

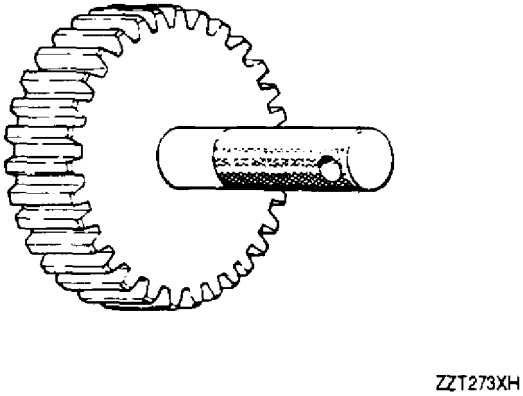

Figure 2. 6796014 Planet Gear Index Plate

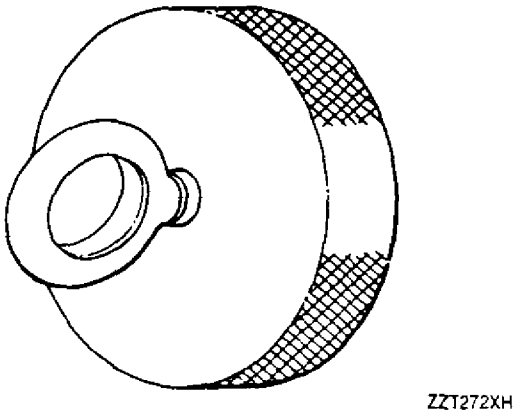

Figure 3. 6796010 Propeller Shaft and Planet Gear Lift

CAUTION

The roller bearing outer ring and rollers should remain installed in the front housing when the propeller shaft is removed. If it comes out with the shaft remove it immediately. If not immediately removed, the outer ring and rollers will fall free of the inner ring and will be damaged (only oil and close fit is holding the outer ring and rollers in place).

e. Remove propeller shaft and planetary gears from front housing assembly (2). Place assembly in 6796834 buildup stand.

f. Install 6796691 bearing roller retainer (figure 4) in propeller shaft roller bearing outer ring and rollers to retain rollers.

g. Remove lift and instal 6796472 bearing inner ring puller on hub of planet rear carrier (14, figure 1).

h. Remove bearing inner ring (3) from planet rear carrier using 6796472 bearing inner ring puller. Remove inner ring locking key (4).

CAUTION

To prevent cracking a planet gear journal do not punch mark over a journal pin hole.

NOTE

The markings in the following step are used to position parts at reassembly.

i. Prior to further disassembly, mark the extreme outward (radial) position of each planet gear assembly journal as shown in figure 5.

j. Remove planet journal plug internal retaining rings (5, figure 1). Using 2308 tee−handle puller remove planet journal plugs (6).

k. Remove muted bolts (9) and spacer blocks (10) as follows:

CAUTION

Do not attempt to straighten dimple prior to cup washer removal. Cup washer dimples are removed by the end slot spanner nut wrench when loosening nut.

(1) Remove spanner nuts (7) using 6799615 spanner nut wrench (figure 6). Remove cup washers (8, figure 1) and retain for reuse.

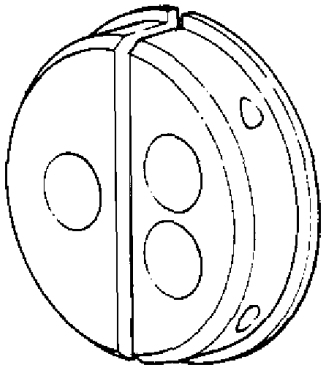

Figure 4. 6796691 Propeller Shaft Bearing Roller Retainer

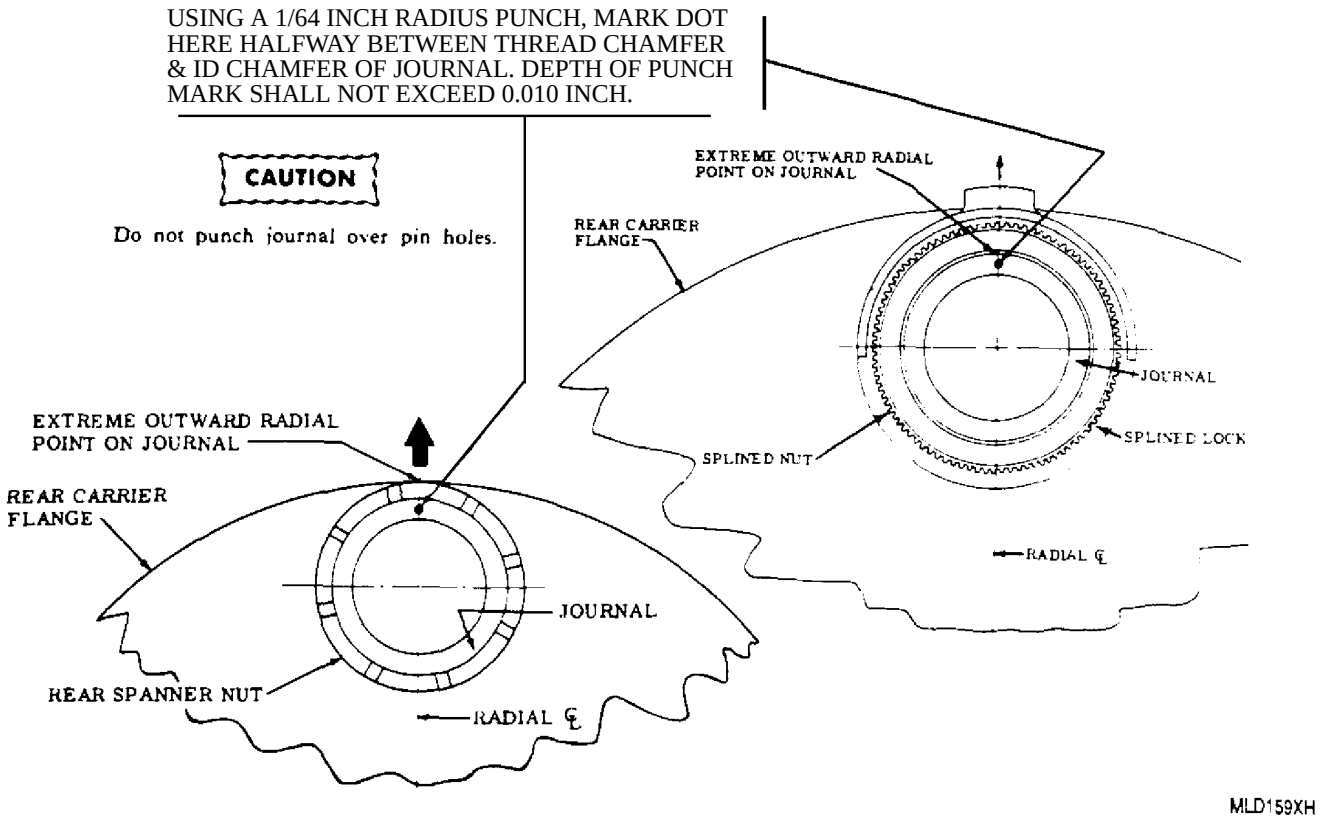

Figure 5. Marking of Planet Journal Position

(2) Remove muted bolts.

(3) Remove spacer blocks.

l. Remove rear splined nuts (RH threads) (13), rear carrier (14), and install 6799826 support plate as follows:

(1) Remove external retaining rings (11) and splined locks (12) from rear splined nuts.

(2) Install the 6799823 power wrench adapter (figure 7). Install 6796631 power wrench torque fixture (figure 8), 6797788 spline wrench (figure 9) and SWE 102 Powerwrench.

(3) Remove rear splined nuts (RH threads). Remove tools.

(4) Install 6796565 planet rear carrier pushers (figure 10) into the spacer block holes and loosen rear carrier (14, figure 1) from the propeller shaft.

(5) Remove the pushers and rear carrier.

(6) Install 6799826 support plate on planet gear and bearing assemblies (figure 11).

(7) Secure support plate, using removed rear splined nuts.

m. Rotate the assembly front end up in stand.

n. Remove front splined nuts (LH threads) (17, figure 1) as follows:

(1) Remove external retaining rings (15) and splined locks (16) from front splined nuts.

(2) Place 6796561 pivot power wrench adapter in position (figure 12).

(3) Install 6799822 spline wrench (figure 13).

(4) Insert 6796634 holder in bottom of the journal (figure 13). Install the SWE 102 Powerwrench in position on adapter and wrench (figure 14).

(5) Install hold down clamp over Powerwrench and adapter (figure 15).

CAUTION

The front splined nuts have LH threads; turn clockwise to loosen.

(6) Loosen and remove the front splined nuts (figure 16).

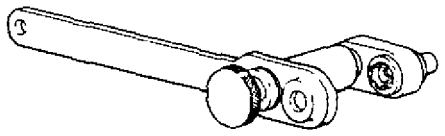

ZZT274XH

Figure 6. 6799615 Propeller Shaft Flange to Rear Carrier Flange Bolt Spanner Nut Wrench

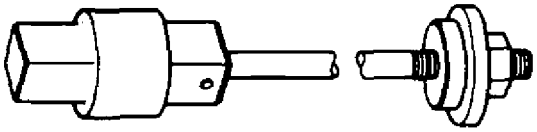

ZZT608XH

Figure 7. 6799823 Planet Journal Rear Retaining Nut Power Wrench Adapter

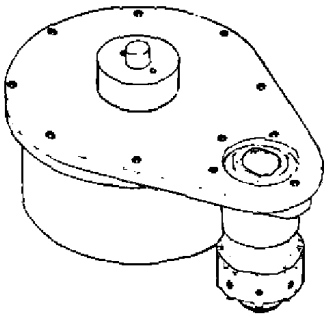

ZZT048XH

Figure 8. 6796631 Power Wrench Torque Fixture

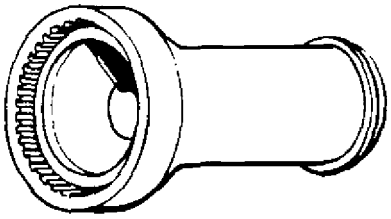

ZZT607XH

Figure 9. 6797788 Planet Journal Rear Retaining Nut Spline Wrench

(7) Remove preformed packings (18, figure 1) from the splined nuts. Discard packings.

o. Rotate the assembly front end down in stand and remove tools.

CAUTION

Planet gear and bearing assembly locations are identified to ensure each assembly is reinstalled at the same location during reassembly.

All details of a planet gear and bearing assembly are a matched set. Do not intermix details between assemblies.

p. Identify each planet gear and bearing assembly location in relation to propeller flange hole number.

q. Install 6796566 planet gear and bearing puller, and remove planet gear and bearing assemblies (19) from propeller shaft (48) (figure 17).

r. Install planet gear and bearing assemblies in 6796835 planet gear and bearing protector (figure 18).

s. Remove carrier oil delivery flange assembly (22, figure 1) and sun gear lube tube assemblies (24) as follows:

(1) Remove bolts (20) and key washers (21) securing flange assembly and lube tube assemblies. Discard key washers.

(2) Remove flange assembly and tube assemblies from propeller shaft.

(3) Remove preformed packings (23) from flange assembly. Discard packings.

(4) Remove tube assemblies from flange assembly. Tight tubes will be removed in following step.

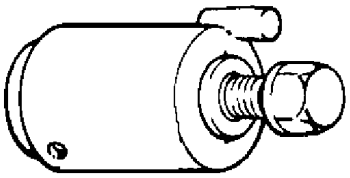

ZZT066XH

Figure 10. 6796565 Planet Rear Carrier Pusher

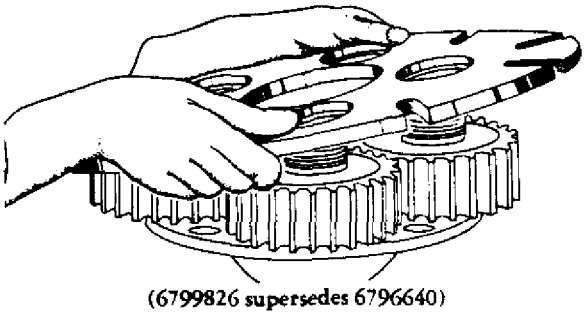

MLD160XH

Figure 11. 6799826 Power Wrench Adapter Support Plate on Planet Rear Journals

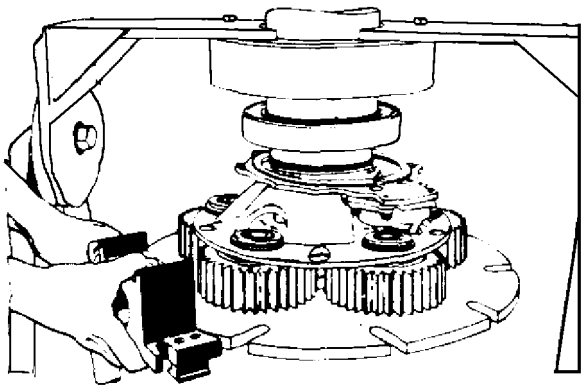

MLD089XH

Figure 12. Installing 6796561 Power Wrench Pivot Adapter on the Support Plate

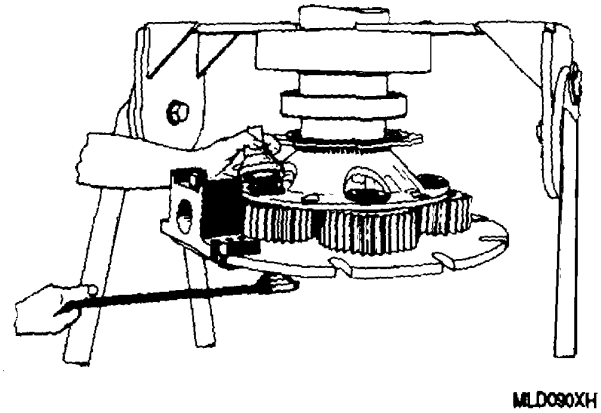

Figure 13. Installing 6799822 Planet Journal Retaining Nut Spline Wrench and 6796634 Holder

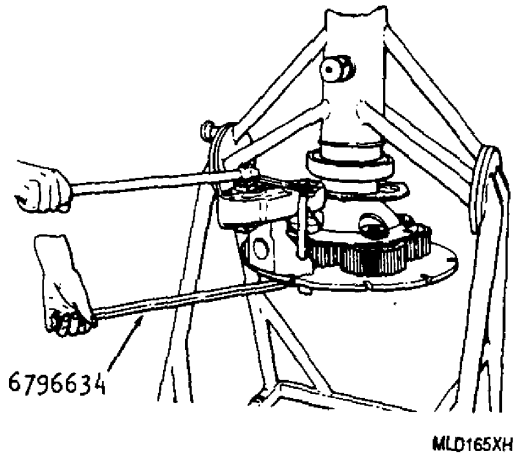

Figure 16. Removing Planet Gear Front Splined Nuts

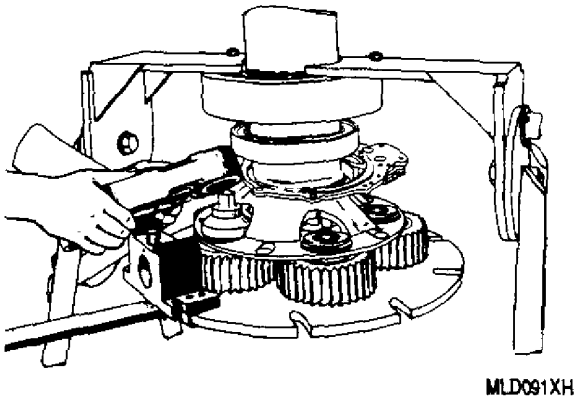

Figure 14. Installing SWE 102 Powerwrench on the Pivot Adapter and Spline Wrench

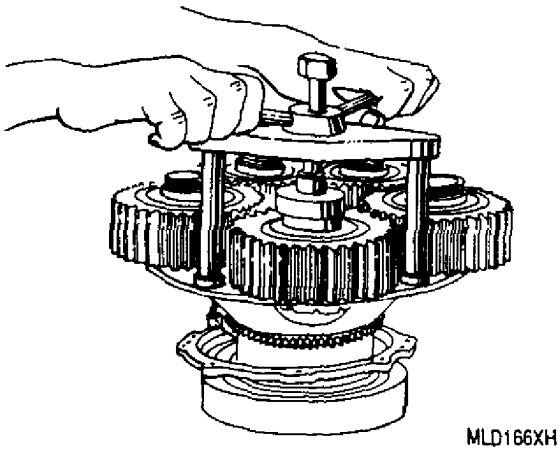

Figure 17. Removing Planet Gear and Bearing Assemblies from Propeller Shaft Flange

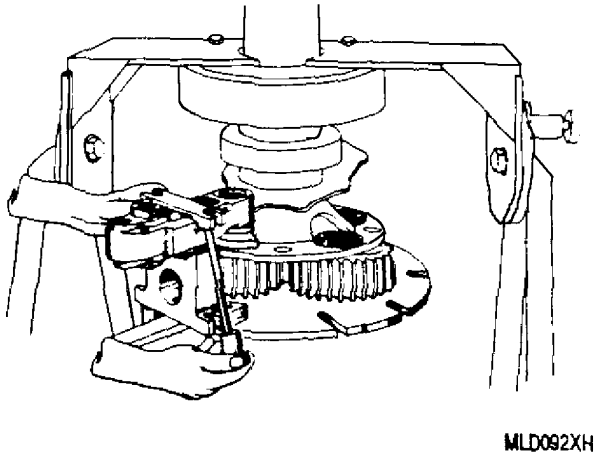

Figure 15. Installing Powerwrench Hold Down Clamp

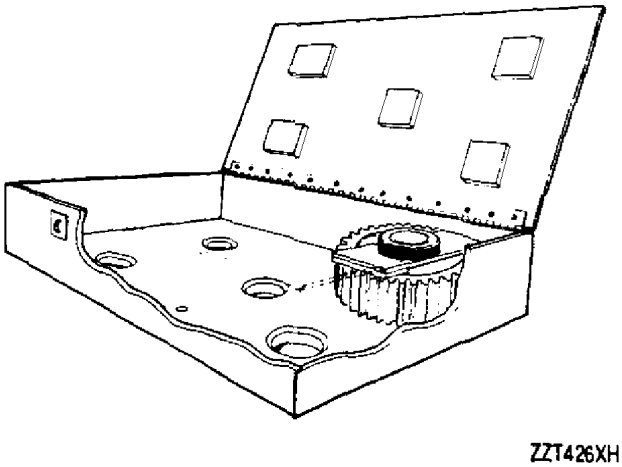

Figure 18. 6796835 Planet Gear and Bearing Assembly Protector

Dry Ice, BB−C−104 **56**

(5) Remove tight tube assemblies by heating the flange assembly in water heated to 150−180°F (66−82°C) and chilling the tubes with dry ice. Remove tubes using 6796616 sun gear lube tube puller (figure 19).

t. Remove bolt (25, figure 1). Remove thrust signal lever (30) and bracket (26) assembled from nose bearing plate (38). If necessary, disassembly thrust signal lever and bracket by removing cotter pin (27), nut (28), and screw (29).

u. Remove propeller shaft (48) from stand and place it, rear end down, on a bench.

v. Remove internal ring (31). Install 6796467 puller into propeller shaft plug (32) and remove plug. Remove preformed packing (34) from plug. Discard packing.

w. Install 23051221 or 6796877 propeller shaft thrust bearing and scavenge pump drive gear hydraulic puller (figure 20) over propeller shaft and remove front roller bearing inner ring (35, figure 1), spring tension washers (36) and thrust ball bearing (37).

x. Remove nose bearing plate (38) and scavenge pump assembly (41).

y. Disassemble scavenge pump assembly (41) as follows:

(1) Remove bolts (39) and washers (40) and remove nose bearing plate (38) from pump assembly.

(2) Remove key assembly (42) from plate.

(3) Remove and discard cotter pin (43). Remove nut (44) and drive screws (45).

(4) Remove drive gear (46) from pump assembly.

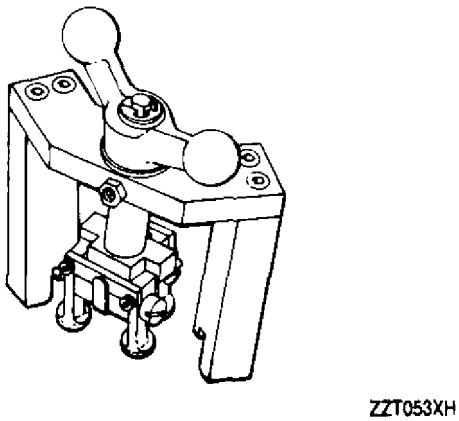

Figure 19. 6796616 Sun Gear Lube Tube Puller

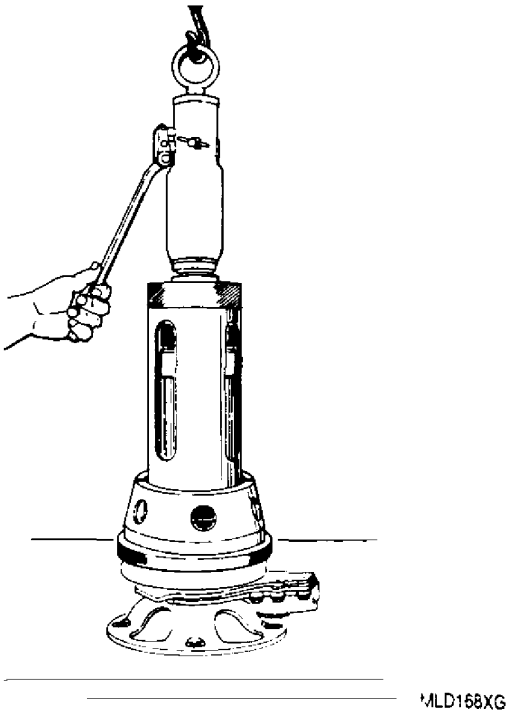

Figure 20. Removing Front Bearing Inner Ring and Rear (Thrust) Bearing from Propeller Shaft Using 23051221 or 6796877 Puller

z. Remove scavenge pump drive gear (47) from propeller shaft (48) as follows:

(1) Reinstall 23051221 or 6796877 hydraulic propeller shaft thrust bearing and scavenge pump drive gear puller with longer puller halves.

(2) Remove scavenge main drive gear from propeller shaft.

aa. Install 6796300 propeller shaft cover on the shaft splines.

25. **FRONT HOUSING ASSEMBLY AND COMPONENTS DISASSEMBLY**. (figure 21)

Support Equipment Required

Part No./Type Designation	Nomenclature
6796513	Compressor, reverse torque springs
6796691	Retainer, bearing roller, propeller shaft
6798224	Wrench, spanner

a. Position front housing assembly (30, figure 21) front end down in stand.

b. Remove propeller shaft spring tension washers (1) from front housing assembly.

c. Remove propeller shaft front bearing outer ring and rollers (2) with 6796691 bearing roller retainer in ID of bearing to hold the rollers in place.

d. Remove ring gear (4), ring gear intermediate coupling (6), and ring gear coupling (8) as follows:

(1) Remove ring gear intermediate retaining springs (3) and remove ring gear.

(2) Remove ring gear rear retaining springs (5) and remove ring gear intermediate coupling.

(3) Remove ring gear front retaining springs (7) and remove ring gear coupling.

e. Install 6796513 reverse torque springs compressor on helical spline coupling (12).

f. Compress helical compression springs (17). Remove plain hex nuts (9) and tablock washers (10) securing helical spline coupling (12). Discard tablock washers.

WARNING

The front plate (14) spline ring (13), spline coupling (12), and rear ring (11) can bind (hangup) on mounting studs when the compression is released on the springs compressor. These parts should move freely upward as compression is released. If compression is completely released while these parts are hungup on the studs, the parts can suddenly release from the studs and cause parts damage and/or personal injury.

g. Slowly release compression on springs compressor observing that coupling parts stackup move freely upward until compression is completely released. If parts bind, recompress springs and again slowly release compression. Remove springs compressor.

h. Remove negative torque indicator rear ring (11), helical spline coupling (12), negative torque system spline ring (13), and negative torque indicator front plate (14).

i. Remove negative torque indicator plungers (15), negative torque switch actuator rod (16) and compression springs (17). Remove and discard preformed packing (18) from actuator rod.

j. Remove oil pressure relief valve assembly (19). Remove and discard gasket (20).

k. Remove cotter pins (21) castle hex nuts (22), and flat washers (23) and remove main scavenge oil pump assembly (24) from front housing assembly. Discard cotter pins.

CAUTION

Do not attempt to straighten dimple prior to cup washer removal. Cup washer dimple is removed by the end slot spanner nut wrench when loosening nut.

l. Remove end slotted spanner nut (25) using 6798224 wrench. Retain cup washer (26) for reuse, Remove shaftgear (27) from pump assembly.

m. Remove and discard preformed packing (28).

n. Remove straight headless pin (29) if loose. Retain for reinstallation at assembly.

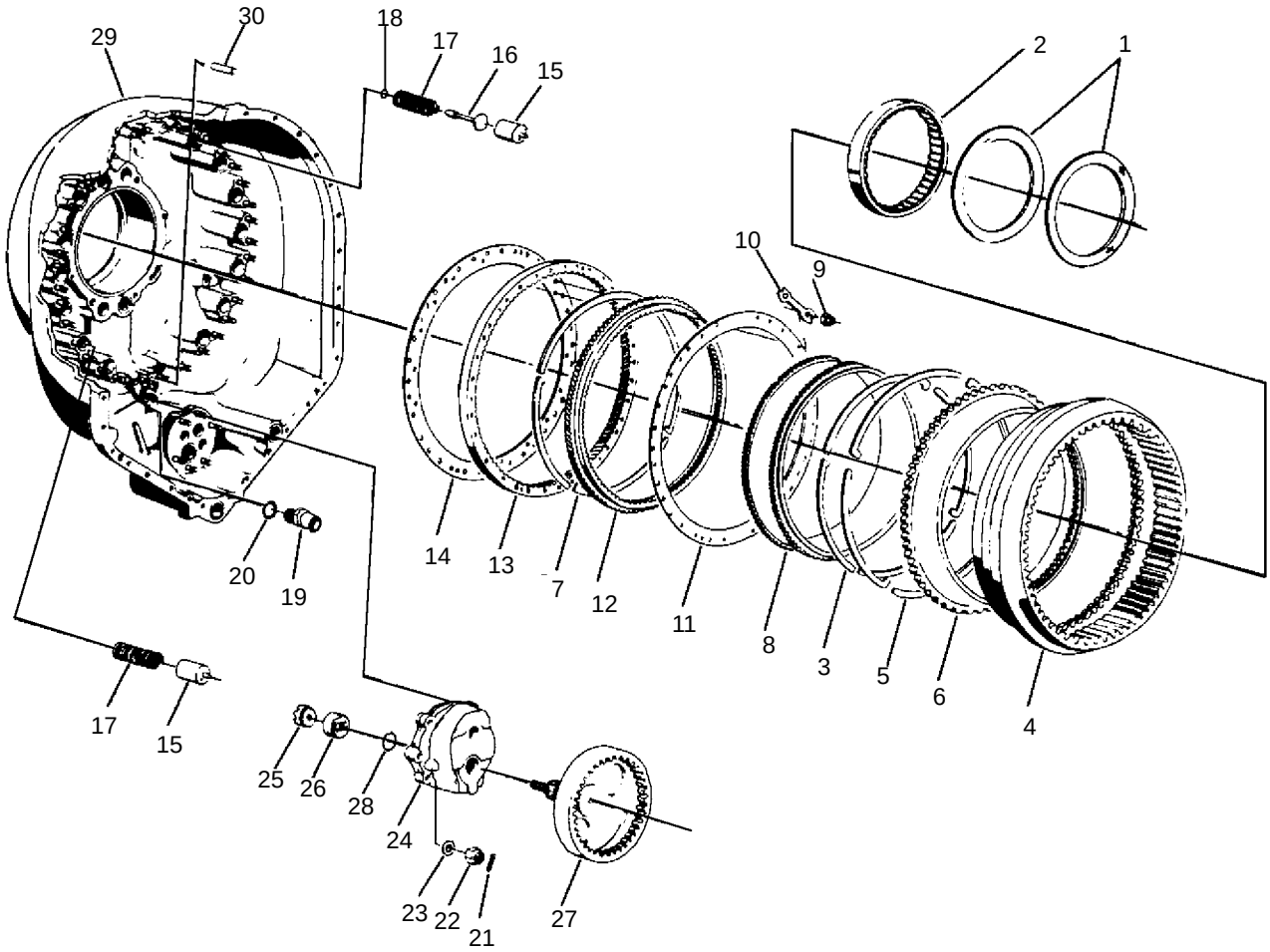

1. Spring Tension (Belleville) Washers
2. Bearing Outer Ring and Rollers
3. Ring Gear Intermediate Retaining Springs
4. Ring Gear
5. Ring Gear Rear Retaining Springs
6. Ring Gear Intermediate Coupling
7. Ring Gear Front Retaining Springs
8. Ring Gear Coupling
9. Nut
10. Tablock Washer
11. Negative Torque Indicator Rear Ring
12. Helical Spline Coupling
13. Negative Torque System Spline Ring
14. Negative Torque Indicator Front Plate
15. Negative Torque Indicator Plungers
16. Negative Torque Switch Actuator Rod
17. Helical Compression Springs
18. Preformed Packing
19. Oil Pressure Relief Valve Assembly
20. Aluminum−Parmite Gasket
21. Cotter Pin
22. Nut
23. Washer
24. Main Scavenge Oil Pump Assembly
25. End−Slotted Spanner Nut
26. Cup Washer
27. Pump Drive Spur Shaftgear
28. Preformed Packing
29. Headless Straight Pin
30. Front Housing Assembly

Figure 21. Front Housing Assembly and Components − Disassembly

DEPOT MAINTENANCE

ASSEMBLY

REDUCTION GEAR ASSEMBLY

Reference Material

Reduction Gear Rear Housing and (Inner) Diaphragm Assembly – Inspection and Repair ..... WP 037 00
Maintenance ..... NAVAIR 02B–5DG–6–1
Assembly and Disassembly – Standard Practices ..... WP 016 00
Reduction Gear Unit with Safety Coupling and Torquemeter Assembly – Removal and Installation ..... WP 027 00
Reduction Gear Rear Housing Oil Seals – Replacement ..... WP 033 00
Thrust Sensitive Signal System Actuator – Removal and Installation ..... WP 036 00
Reduction Gear Housing Plugs and Oil Pressure Relief Valve – Maintenance ..... WP 037 00
Reduction Gear Unit Parts – Cleaning, Inspection, Repair and Replacement ..... WP 039 00
Reduction Gear Unit – Assembly ..... WP 040 00
Reduction Gear Propeller Feather Solenoid – Maintenance ..... WP 079 00
Thrust Sensitive Switch – Maintenance ..... WP 080 00

Alphabetical Index

Subject **Page No.**

Front Housing Assembly 14
Front Housing External Components 39
Electrical (Propeller) Feather Solenoid Assembly Installation 39
Propeller Control Linkage Installation 39
Reduction Gear Eyebolt and Strut Installation 40
Thrust Sensitive Signal System Actuator Installation 39
Thrust Sensitive Switch Assembly Installation 39
General Instructions and Information 3
Assembly Fit Limits 3
Assembly Torque Requirements 3
Cup Washer Installation 4
Lubrication and Sealant Compound Requirements 3
Spanner Nut Face Lapping 4

Alphabetical Index (contd)

Subject **Page No.**

Handling Heated and Super–Chilled (Frozen) Parts 4
Introduction 3
Main Diaphragm Assembly 28
  Main Diaphragm Assembly and Installation 28
Pinion Gear Assembly, Main Drive Gear, and Sun Gear Installation 29
Propeller Shaft and Planetary Gear Assembly 16
  Carrier Oil Delivery Flange and Sun Gear Lube Tube Assemblies Installation 16
  Planet Gear and Bearing Assemblies, Rear Carrier, and Rear Carrier Front Bearing Inner Ring Installation 18
  Propeller Shaft and Planetary Gear Assembly Installation 28
  Propeller Shaft, Drive Gear, Nose Bearing Plate and Scavenge Pump Assembly, Thrust Ball Bearing, Roller Bearing Inner Ring, and Thrust Signal Bracket and Lever Assembly 25
Propeller Shaft Axial Movement (End Play) Check 40
Rear Housing and (Inner) Diaphragm Assembly 29
  Alternator Drive Gear Assembly Installation 33
  Cone Type Propeller Brake Assembly Installation 30
  Generator Shaft and Hydraulic Pump Drive Gear Installation 31
  Hydraulic Pump Drive Gear Assembly Installation 32
  Hydraulic Pump Drive Idler Gear Installation 32
  Hydraulic Pump Idler Gear Installation 32
  Inner Diaphragm Installation 33
  Main Idler Gear Installation 33
  Oil Pump Drive Gear Installation 29
  Oil Pump Idler Gear Installation 29
  Rear Housing Installation into Turnover Stand, and Plugs and Oil Pressure Relief Valve Installation 29
  Tachometer Drive Gear Installation (Two Places) 29
  Tachometer Drive Idler Gear Installation 30
Rear Housing Assembly Installation 36
Rear Housing External Components 39
  Accelerometer (Electric Piezo) and Mounting Bracket Installation 39
  Mounting Pad Cover Installation 39
  Oil Pressure Relief Valve Assembly Installation 39
  Oil Pump and Filter Assembly Installation 39
  Scavenge Oil Outlet Magnetic Plug Body Assembly Installation 39
Reduction Gear Plugs 39
  Front Housing Plugs Installation 39
  Rear Housing Plugs Installation 39

Record of Applicable Technical Directives

Type/No.	Date	Title and ECP No.	Date Inc.	Remarks
PPC–121	03 Mar 04	Redesigned Propeller Shaft Plug Installation (ECP–2129R)	01 Sep 05	

1. **INTRODUCTION.**

2. This work package (WP) contains the procedures for the assembly of the reduction gear assemblies on the T56−A−427 turboprop engine. The following are included:

- Assembly of propeller shaft, planet gears, and rear carrier
- Buildup of front housing assembly
- Assembly and installation of main diaphragm assembly on front housing
- Assembly of rear housing and inner diaphragm assembly
- Joining rear housing to front housing and main diaphragm
- Installation of external components

3. **GENERAL INSTRUCTIONS AND INFORMATION.**

4. ASSEMBLY FIT LIMITS.

a. The fit limits for assembly of the reduction gear assembly are provided by illustration and tabular data in figure 1.

b. The reduction gear assembly fit limits define the correct dimensional relationship between mated parts. Use these limits as a guide when replacing or determining serviceability of parts. The letters L and T indicate a Loose (clearance) or Tight (interference) fit. Tolerances are shown in the minimum and maximum columns. A 0.000 value is to be considered as a tight fit. Values of 0.0001L or greater may be installed by using a phenolic drift.

c. The limits specified, for circumferential fits between ID and OD of two parts, are based on the difference between machined, true circle, diameters of the two parts. Therefore, when inspecting and measuring used parts to determine assembly fit condition, an average diameter shall be established if an out−of−round condition exists.

d. Avoid interference fit of gears, spacers, and pinions to drive shafts to prevent galling, unless limits indicate an interference fit.

e. Be sure all gear trains have sufficient backlash to permit the entire train to turn freely.

f. Throughout assembly procedure, check all accessible shaft ends for assembly end clearance of 0.003 in. minimum, unless otherwise specified. Replace parts if necessary for proper end clearance. Use a standard dial indicator and weighted base.

5. ASSEMBLY TORQUE REQUIREMENTS.

a. Special torque requirements and locations are provided by illustration and tabular data in figure 2.

b. All torque values are in pound−inches (lb. in.) unless otherwise specified and are included in procedural text.

Lubricating Oil, MIL−PRF−23699 2

c. Unless otherwise specified, all threads shall be lubricated with fresh MIL−PRF−23699 lubricating oil (engine oil). Threads shall be free of nicks or burrs and turn freely without binding.

Anti−seize Compound (Never Seez) NS165 31

d. Apply Anti−seize compound (Never Seez) NS165 (high temperature silicone base molybdenum disulfide) to 10 and face of cup washers.

6. LUBRICATION AND SEALANT COMPOUND REQUIREMENTS.

a. Use only the lubricants and sealant compounds specified in this WP during reduction gear assembly buildup.

b. Do not use 3M EC776 sealant (Allison EMS 27720) where use of Permatex 1372 (Allison EMS 27710) is specified.

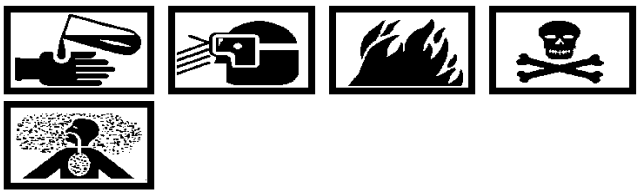

Lubricating Oil, MIL−PRF−23699 2

c. Apply fresh MIL−PRF−23699 lubricating oil (engine oil) to preformed packings and rubber O−ring seals prior to installation on associated part.

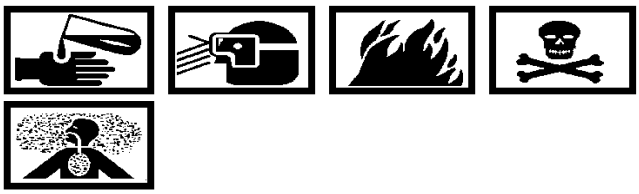

Anti−seize Compound (Never Seez) NS165 31

d. Apply Anti−seize Compound (Never Seez) NS165 (high temperature silicone base molybdenum disulfide) to ID and face of cup washers.

7. CUP WASHER INSTALLATION.

NOTE

Unlocking the dimple of an installed cup washer was accomplished (during removal) by the turning motion of the spanner nut wrench.

a. Re−use of a cup washer is permitted provided that any remaining portion of the previous dimple has been completely re−formed to the washer wall contour and no splits or tears exist. Complete re−forming is necessary to prevent metal chips (FOD) from being generated by the milling action of the spanner nut/wrench during assembly.

b. Dimple used cup washers in an area not previously dimpled and new washers in any area. Dimple washer into a scallop−cutout not into a wrenching slot as follows:

(1) Bearing mounted applications. Use the specified dimpling fixture. Impact−type dimpling, such as produced by hammer blows (which tend to harden the bearing) is not permitted.

(2) Non−bearing mounted applications. A dimpling fixture is preferred. If no fixture is available, dimpling may be accomplished using a spherical−end shaft on cup washer lip and forming dimple into the scallop cutout by a light rap with a hammer. Use of a standard punch or flat−end drift is not permitted.

8. SPANNER NUT FACE LAPPING. The following procedure is applicable to new and used spanner nuts.

Support Equipment Required

Part No./Type Designation	Nomenclature
——	Plate, surface

Materials Required

Specification No./Part No.	Nomenclature
A−A−1206	Cloth, crocus
MIL−PRF−23699	Oil, lubricating

a. The faces of used spanner nuts shall be lightly lapped to remove any high metal resulting from scratches, dents, and nicks. The faces of new nuts shall be lightly lapped to remove high spots in black oxide coating.

Lubricating Oil, MIL−PRF−23699 2

b. Lap nut faces using a standard surface plate and A−A−1206 crocus cloth dampened with MIL−PRF−23699 oil. Lap 15−20 strokes using a Figure−8 pattern.

c. Wipe nut clean after lapping using clean shop rag dampened with MIL−PRF−23699 oil.

9. **HANDLING HEATED AND SUPER−CHILLED (FROZEN) PARTS.**

a. Handle dry ice and super−chilled parts with clean insulated gloves to prevent skin damage (freezer burn) and contamination of parts, especially bearing components.

b. Handle heated parts with clean insulated gloves to prevent skin damage (burns) and contamination of parts, especially bearing components.

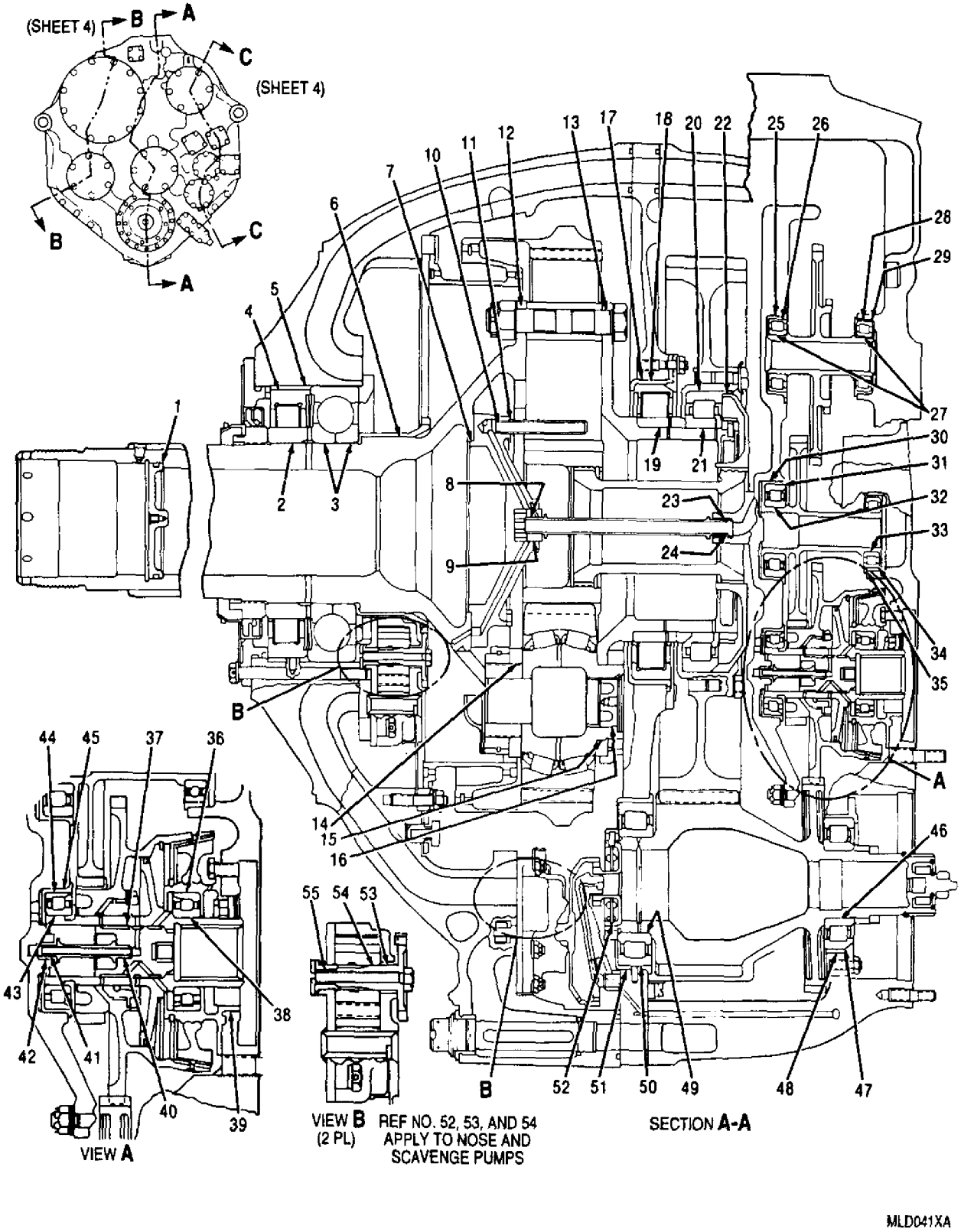

Figure 1. Reduction Gear Assembly Fit Limits (Sheet 1 of 5)

Ref. No.	Description	Minimum	Maximum
1	Plug–Propeller Shaft	0.008L	0.019L
2	Roller Bearing–Propeller Shaft	0.0015T	0.0005T
	Roller Bearing P/Ns 23055955, 23064143, 23066782–Propeller Shaft	0.0044T	0.0034T
3	Ball Bearing–Propeller Shaft	0.0015T	0.0002T
4	Roller Bearing–Cage	0.0004L	0.0036L
5	Cage–Housing (select)	0.0040T	0.0020T
6	Pump Drive Gear–Propeller Shaft	0.0020T	0.0040L
7	Flange–Propeller Shaft	0.0010L	0.0050L
8	Tube–Bushing	0.0005L	0.0030L
9	Bushing–Flange	0.0030T	0.0010T
10	Plug–Tube	0.0020T	0.0000
11	Tube–Flange	0.0010T	0.0005L
12	Bolt–Carrier Spacer Block (includes propeller shaft flange)	0.0010L	0.0080L
13	Bolt–Carrier Spacer Block (includes carrier flange)	0.0010L	0.0080L
14	Planet Gear and Bearing Journal–Propeller Shaft	0.0015T	0.0000
15	Planet Gear and Bearing Journal–Rear Carrier	0.0015T	0.0000
16	Plug–Planet Gear and Bearing Journal (select)	0.0040T	0.000
17	Cage–Diaphragm (select)	0.0160T	0.0140T
18	Bearing–Cage	0.0002L	0.0036L
19	Bearing–Carrier	0.0021T	0.0002T
20	Bearing (out–of–round)–Gear (main drive)	0.0030L	0.0052L
21	Bearing–Carrier	0.0021T	0.0002T
22	Sun Gear Hub Flange–Gear (main drive)	0.0003T	0.0025L
23	Bushing–Inner Diaphragm	0.0030T	0.0010T
24	Tube–Bushing	0.0005L	0.0030L
25	Bearing Cage–Inner Diaphragm (select)	0.0030T	0.0010T
26	Bearing–Cage	0.0001T	0.0025L
27	Bearings–Gear (hydraulic pump idler)	0.0009T	0.0000
28	Cage–Housing (select)	0.0030T	0.0010T
29	Bearing–Cage	0.0001T	0.0024L
30	Cage–Inner Diaphragm (select)	0.0030T	0.0010T
31	Bearing–Cage	0.0001T	0.0025L
32	Bearing–Gear (main idler)	0.0010T	0.0000
33	Bearing–Gear (main idler)	0.0009T	0.0000
34	Bearing–Cage	0.0001T	0.0025L
35	Cage–Housing (select)	0.0030T	0.0010T

Figure 1. Reduction Gear Assembly Fit Limits (Sheet 2)

Ref. No.	Description	Minimum	Maximum
36	Bearing−Flange	0.0001T	0.0021L
37	Plug−Shaft	0.0020T	0.0005T
38	Bearing−Starter Shaft	0.0007T	0.0001T
39	Flange−Housing	0.0020T	0.0000
40	Tube−Plug	0.0005L	0.0040L
41	Tube−Bushing	0.0005L	0.0040L
42	Bushing−Inner Diaphragm	0.0030T	0.0005T
43	Bearing−Starter Shaft	0.0007T	0.0001T
44	Bearing−Cage	0.0001T	0.0025L
45	Bearing Cage−Inner Diaphragm (select)	0.0030T	0.0010T
46	Bearing−Pinion Shaftgear (rear)	0.0018T	0.0008T
47	Bearing−Cage	0.0029L	0.0060L
48	Bearing Cage−Housing (select)	0.0030T	0.0010T
49	Bearing−Pinion Shaftgear (front) (select)	0.0029T	0.0019T
50	Bearing (out−of−round)−Cage	0.0027L	0.0060L
51	Roller Bearing Cage−Diaphragm (select)	0.0050T	0.0030T
52	Scavenge Pump Drive Pinion Gear−Pinion Shaftgear	0.0025T	0.0005T
53	Drive Shaftgear−Scavenge Pump Body (bushing)	0.0010L	0.0040L
54	Drive Shaftgear−Scavenge Pump Drive Gear	0.0005L	0.0025L
55	Drive Shaftgear−Scavenge Pump Plate (bushing)	0.0010L	0.0040L
56	Cage−Inner Diaphragm (select)	0.0030T	0.0010T
57	Bearing−Cage	0.0001T	0.0025L
58	Bearing−Shaft (hydraulic pump drive gear)	0.0006T	0.0001L
59	Cage−Rear Housing (select)	0.0030T	0.0010T
60	Bearing−Cage	0.0001T	0.0025L
61	Bearing−Shaft (hydraulic pump drive gear)	0.0006T	0.0001L
62	Bearing−Cage	0.0001T	0.0006L
63	Bearing−Gear (tachometer drive idler)	0.0004T	0.0005L
64	Bearing−Cage	0.0001T	0.0006L
65	Bearing−Gear (tachometer drive idler)	0.0004T	0.0001L
66	Spacer−Gear (tachometer drive idler)	0.0015L	0.0050L
67	Cage−Rear Housing	0.0000	0.0040L
68	Bearing−Cage	0.0001T	0.0010L
69	Bearing−Shaft (tachometer drive gear)	0.0004T	0.0001L
70	Bearing−Cage	0.0001T	0.0010L
71	Bearing−Shaft (tachometer drive gear)	0.0004T	0.0001L

Figure 1. Reduction Gear Assembly Fit Limits (Sheet 3)

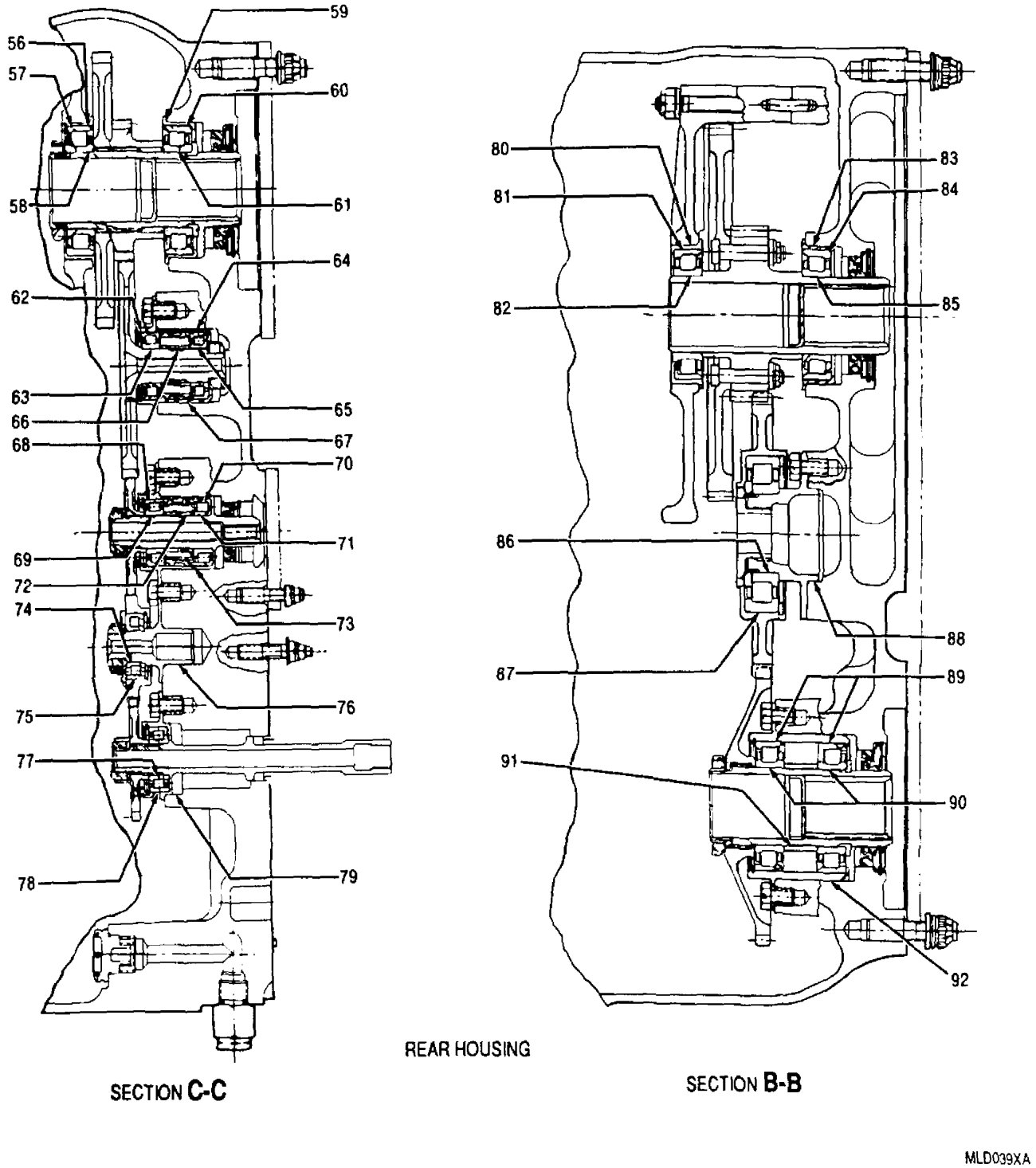

Figure 1. Reduction Gear Assembly Fit Limits (Sheet 4)

Ref. No.	Description	Minimum	Maximum
72	Spacer−Shaft (tachometer drive gear) (2 places)	0.0015L	0.0050L
73	Cage−Rear Housing	0.0000	0.0040L
74	Bearing−Journal (oil pump drive idler gear)	0.0000	0.0008L
75	Bearing−Gear (oil pump drive idler gear)	0.0006T	0.0002L
76	Journal (oil pump drive idler gear) − Housing	0.0000	0.0040L
77	Bearing−Shaft (oil pump drive gear)	0.0004T	0.0005L
78	Bearing−Cage	0.0001T	0.0010L
79	Cage−Rear Housing	0.0000	0.0040L
80	Cage−Inner Diaphragm (select)	0.0030T	0.0010T
81	Bearing−Cage	0.0001T	0.0025L
82	Bearing−Shaft (alternator drive)	0.0012T	0.0001T
83	Cage−Housing (select)	0.0030T	0.0010T
84	Bearing−Cage	0.0001T	0.0020L
85	Bearing−Shaft (alternator drive)	0.0012T	0.0001T
86	Bearing−Flange (generator idler bearing)	0.0001 T	0.0008L
87	Bearing−Gear (hydraulic pump drive idler alternate)	0.0001T	0.0008L
88	Flange (generator idler bearing) − Housing	0.0000	0.0030L
89	Bearings−Cage	0.0001T	0.0020L
90	Bearings−Shaft (generator drive gear)	0.0006T	0.0001L
91	Spacer−Shaft (generator drive gear)	0.0005L	0.0040L
92	Cage−Housing	0.0000	0.0060L

Figure 1. Reduction Gear Assembly Fit Limits (Sheet 5)

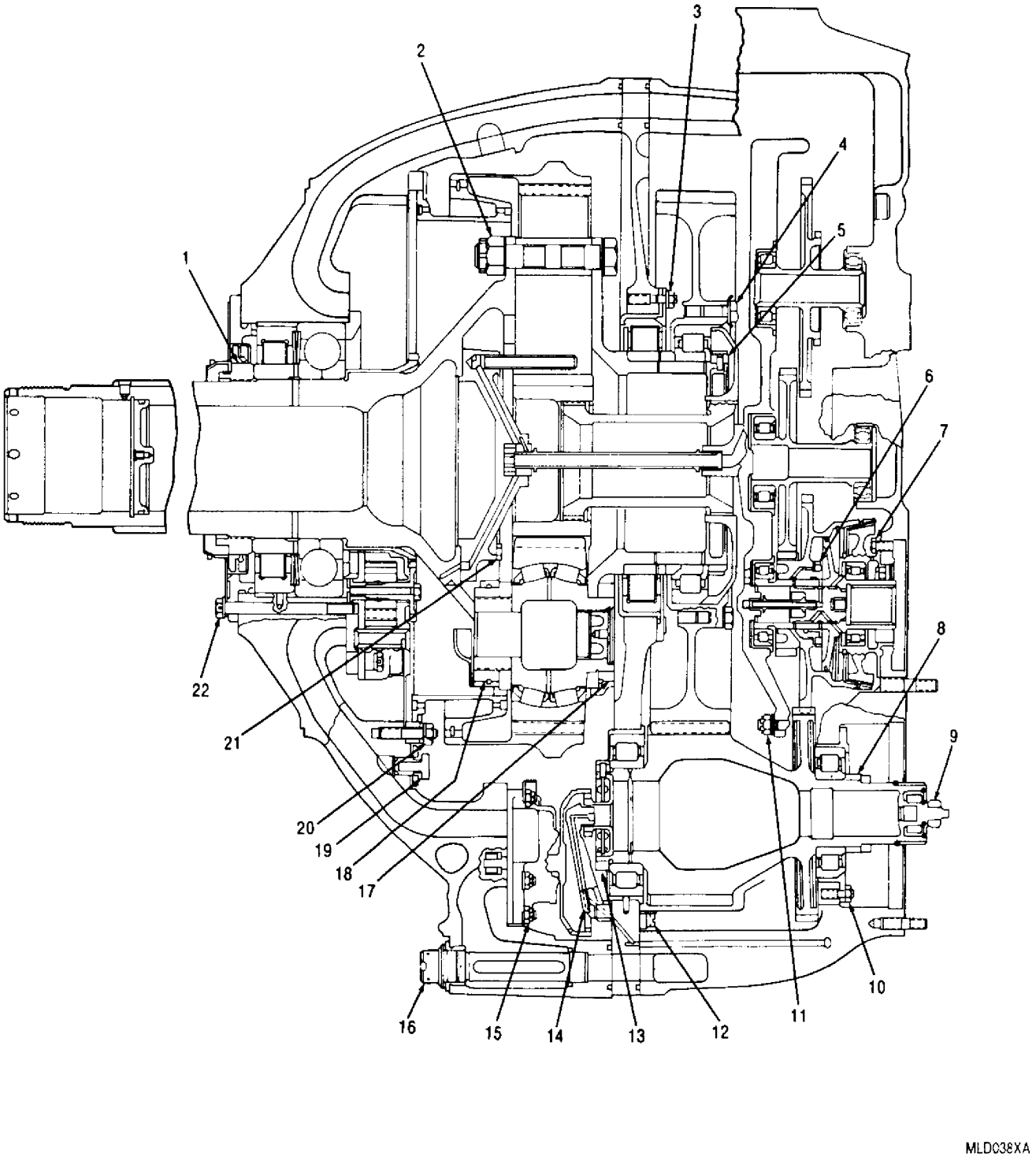

Figure 2. Reduction Gear Assembly Torque Limits (Sheet 1 of 3)

Ref. No.	Description	Minimum Maximum (pound−inches unless otherwise specified)
1	Nut, Thrust Bearing	Torque to 1000 lb ft. Loosen to zero, then retorque 12° to 15° past fingertight.
2	Nut, Spanner (5 places)	100−150 lb ft.
3	Nut, (8 places) Segment Plate	Torque to 100 lb in. Loosen to zero, then 74−89
4	Bolt (20 places), Sun Gear Hub Flange	Torque to 385−425. Loosen to zero, then 385−425
5	Nut, Retaining, Rear Carrier Rear Bearing	Lubricate threads and face of nut. Torque to 600 lb ft, then increase in tightening direction to align next lock pin hole.
6	Nut, Propeller Brake Outer Member	Torque to 150 lb ft. Loosen to zero, then 120−150 lb ft.
7	Bolt (6 places), Starter Shaft Bearing Flange	70−85
8	Nut, Retaining, Pinion Gear Rear Bearing	Refer to NAVAIR 02B−5DG−6−1, WP 039 00.
9	Nut, Safety Coupling	Fingertight. (to store nut)
10	Nut (7 places), Cage, Bearing, Rear Pinion, Flanged	90−100
11	Nut (13 places), Inner Diaphragm	120−180
12	Screw, Pinion Oil Baffle	50−58
13	Nut, Retaining, Pinion Gear Front Bearing	Refer to NAVAIR 02B−5DG−6−1, WP 039 00.
14	Screw, Oil Jet Nozzle	50−58
15	Nut (6 places), Main Scavenge Pump	70−85
16	Plug	240−300
17	Nut, RH Splined (5 places)	950−1000 lb ft
18	Nut, LH Splined (5 places)	1450−1500 lb ft
19	Valve Assembly, Oil Pressure Relief	200−250
20	Nut (36 places)	120−200
21	Bolt (10 places)	70−85
22	Bolt (8 places), Nose Plate	Torque to 50−75 in sequence 180° apart. Retorque to 90−100 in same sequence.
23	Nut, Spanner (hydraulic pump drive gear bearing)	840−1200
24	Nut, Spanner (tachometer drive gear bearing) (2 places)	240−420
25	Nut, Spanner (oil pump drive idler gear bearing)	240−420
26	Nut, Spanner (oil pump drive gear bearing)	240−420
27	Nut, Spanner (hydraulic pump drive idler alternate gear bearing)	300−540
28	Nut, Spanner (hydraulic pump drive alternate gear bearing)	900−1200

Figure 2. Reduction Gear Assembly Torque Limits (Sheet 2)

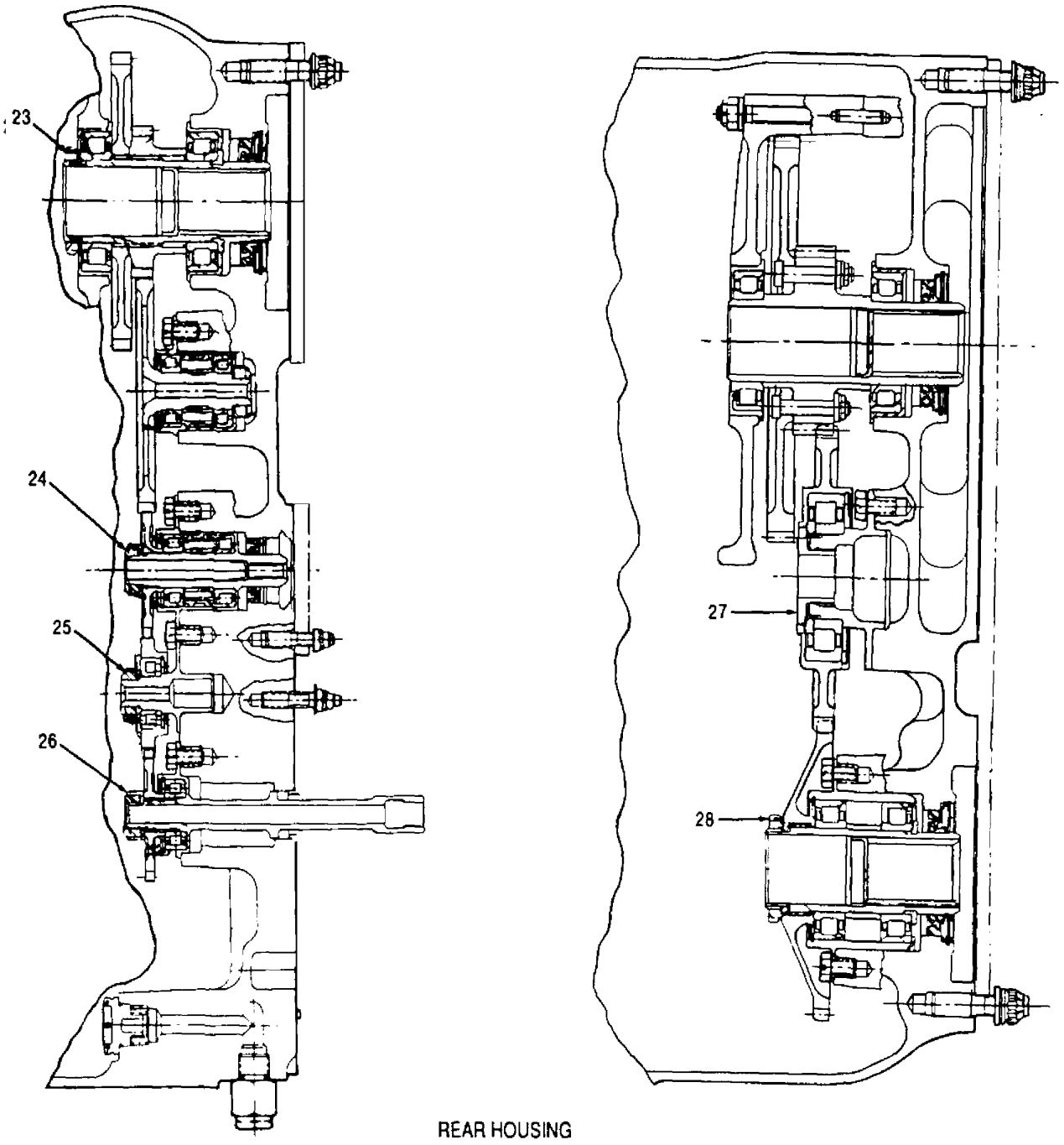

Figure 2. Reduction Gear Assembly Torque Limits (Sheet 3)

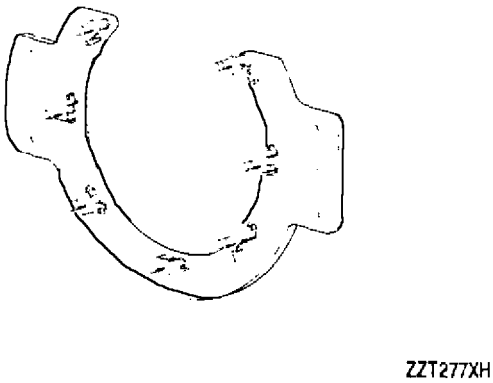

Figure 3. 6796820 Reduction Gear Attaching Adapter

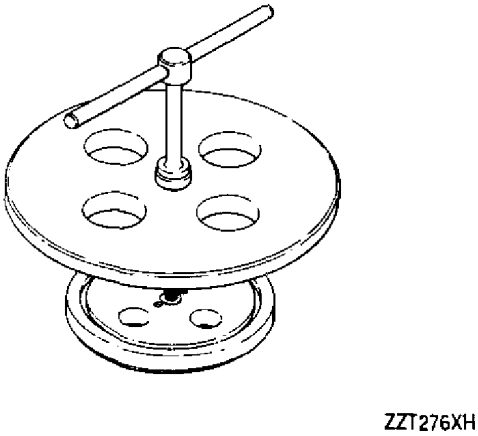

Figure 5. 6796513 Reverse Torque Springs Compressor

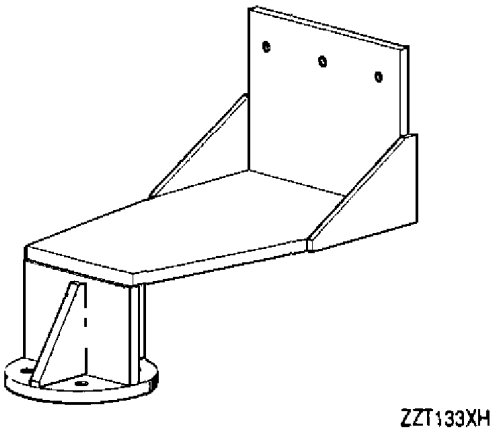

Figure 4. 6799764 Engine Component Attaching Adapter

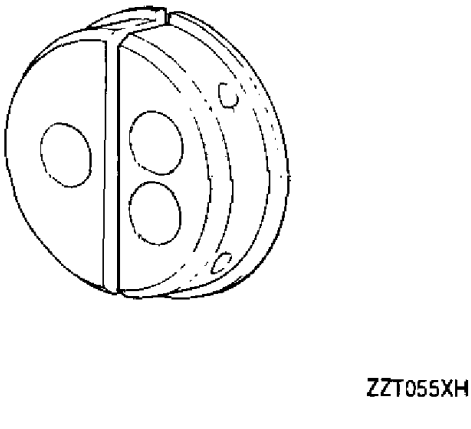

Figure 6. 6796691 Propeller Shaft Bearing Roller Retainer

10. **FRONT HOUSING ASSEMBLY**. (figure 7)

Support Equipment Required

Part No./Type Designation	Nomenclature
6795905	Stand, turnover, engine component
6796513	Compressor, springs, reverse torque
6796691	Retainer, bearing roller
6796820	Adapter, attaching
6799535	Wrench, end slot spanner nut
6799537	Fixture, dimpling
6799764	Adapter
——	Wrench, torque (0−300 lb in.)

Materials Required

Specification No./Part No.	Nomenclature
AS3085−010	Packing (1)
AS3085−122	Packing (1)
MS20995C32	Lockwire
MS24665−151	Pin, cotter (6)
23039032−1	Gasket (1)
6739865	Washer, tablock (18)
6850984	*Washer, cup

*Required when serviceable used washer is not available.

a. Install front housing (1, figure 7) in 6795905 engine component turnover stand with 6796820 adapter (figure 3) and 6799764 adapter (figure 4). Position housing front end down.

b. Install gasket (2, figure 7) on oil pressure relief valve assembly (3). Install valve assembly (3) in bottom of front housing. Torque valve assembly 200−250 lb. in. and lockwire. (QA)

c. Install pump drive spur shaftgear (4) through pump (8). Install cup washer (5) and end slotted spanner nut (6). Refer to figure 1, Ref No. 53, 54, and 55 for applicable fit limits.

d. Torque spanner nut 50−58 lb. in. using 6799535 wrench. Dimple washer lip into a scallop cutout of nut using 6799537 dimpling fixture. (QA)

e. Install preformed packing (7, figure 7) and main scavenge oil pump assembly (8) on mounting pad on lower part of front housing (1).

f. Install washers (9) and nuts (10). Torque nuts 70−85 lb in. Secure with cotter pins (11). (QA)

g. Install preformed packing (12) on negative torque switch actuator rod (13).

h. Insert rod into spring (14) and place the unit in pocket in front housing at approximately the 1 o'clock position.

i. Install remaining springs (14) in front housing pockets and install plungers (15) over springs.

j. Install straight headless pin (20) it removed during disassembly.

k. Install negative torque indicator front plate (16) over springs and plungers.

l. Install negative torque system spline ring (17).

m. Insert helical spline coupling (18) and place the negative torque indicator rear ring (19) over the coupling.

CAUTION

During compression, check for parallelism of the coupling and free movement without binding. If binding on the studs is evident, slowly release compression. Reposition the compressor and parts and repeat the operation.

n. Install 6796513 reverse torque springs compressor (figure 5) and compress the coupling and springs.

o. Install tablock washers (21, figure 7) and nuts (22). Torque nuts 120−200 lb. in. Secure nuts with washer tabs. (QA)

p. Remove 6796513 reverse torque springs compressor.

q. Bench assemble ring gear (27), ring gear intermediate coupling (25), and ring gear coupling (23) as follows:

(1) Install intermediate coupling (25) inside ring gear (27) and secure with rear retaining springs (28). The wave−form of each spring may be modified per step (2) as necessary to facilitate installation and fit.

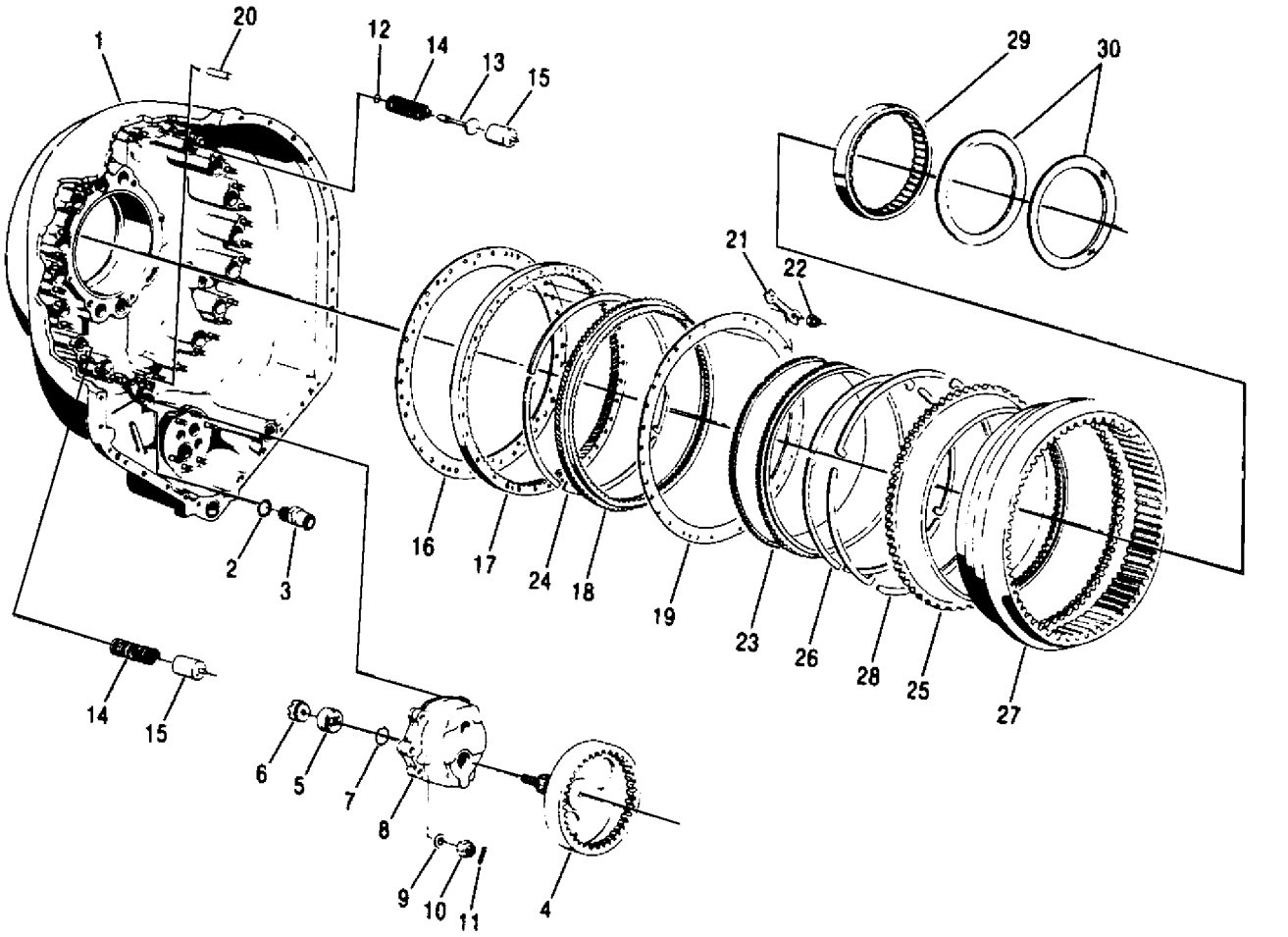

1. Front Housing Assembly
2. Aluminum−Parmite Gasket
3. Oil Pressure Relief Valve Assy
4. Pump Drive Spur Shaftgear
5. Cup Washer
6. End Slotted Spanner Nut
7. Preformed Packing
8. Main Scavenge Oil Pump Assy
9. Washer
10. Nut
11. Cotter Pin
12. Preformed Packing
13. Negative Torque Switch Actuator Rod
14. Helical Compression Springs
15. Negative Torque Indicator Plungers
16. Negative Torque Indicator Front Plate
17. Negative Torque System Spline Ring
18 Helical Spline Coupling
19. Negative Torque Indicator Rear Ring
20. Headless Straight Pin
21. Tablock Washer
22. Nut
23. Ring Gear Coupling
24. Ring Gear Front Retaining Springs
25. Ring Gear Intermediate Coupling
26. Ring Gear Intermediate Retaining Springs
27. Ring Gear
28. Ring Gear Rear Retaining Springs
29. Bearing Ring and Rollers
30. Spring Tension (Belleville) Washers

Figure 7. Front Housing Assembly Details

(2) Modify spring wave−form as follows:

(a) Flatten straight end (no curl) on smooth flat surface using a plastic mallet.

(b) Bend curled end at a point 15/16 to 1−1/16 in. from curl in such a manner so when spring is installed into groove, the newly bent end will rest against the ring gear.

(3) Install ring gear coupling (23) into intermediate coupling (25) and secure with inner retaining springs (26). The spring wave−form of each spring may be modified (sub−step (2)) except bend the curled end in a manner so newly bent end will rest against the ring gear coupling.

r. Install ring gear and coupling assembly inside helical spline coupling (18) and secure with front retaining springs (24). The spring wave−form of each spring may be modified (step q.) except bend the curled end in a manner so newly bent end will rest against the ring gear coupling.

s. Install rollers in propeller shaft roller bearing outer ring (29) and insert 6796691 bearing roller retainer (figure 6) to hold in place. Refer to figure 1, Ref No. 4 for fit limits of outer ring to cage.

t. Install bearing outer ring and rollers in front housing assembly. Remove 6796691 bearing roller retainer.

CAUTION

The tension washers shall be installed so they contact at the ID and have a gap at the OD (V−pattern).

u. Install first (front) spring tension washer (30, figure 7) with concave side facing forward bearing outer ring, install second (rear) washer with concave side facing rearward. Center washers on outer ring. (QA)

11. **PROPELLER SHAFT AND PLANETARY GEAR ASSEMBLY.**

12. CARRIER OIL DELIVERY FLANGE AND SUN GEAR LUBE TUBE ASSEMBLIES INSTALLATION. (figure 8)

Support Equipment Required

Part No./Type Designation	Nomenclature
6797589	Fixture, tab bending, sun gear hub lock
——	Gloves, insulated
——	Wrench, torque (0−150 lb in.)

Materials Required

Specification No./Part No.	Nomenclature
AS3085−112	Packing, preformed (5)
6820128	Washer, key (10)
——	Ice, dry

a. Before assembly check parts for proper fit limits. Refer to figure 1, Ref No. 7, 10, and 11.

WARNING

Heated and super−chilled parts will cause skin damage (burns and freezer burns). Handle parts with clean insulated gloves.

b. Assemble sun gear lube tube assemblies (26, figure 8) and carrier oil deliver flange (27) (figure 11) as follows:

Dry Ice, BB−C−104 **55**

(1) Heat oil delivery flange per NAVAIR 02B−5DG−6−1, WP 016 00, to 180°F (82°C) maximum for 15 minutes to 4 hours and freeze lube tube assemblies if necessary.

(2) Install tube assemblies into delivery flange, aligning tube flange holes with holes in delivery flange. Allow temperatures to normalize.

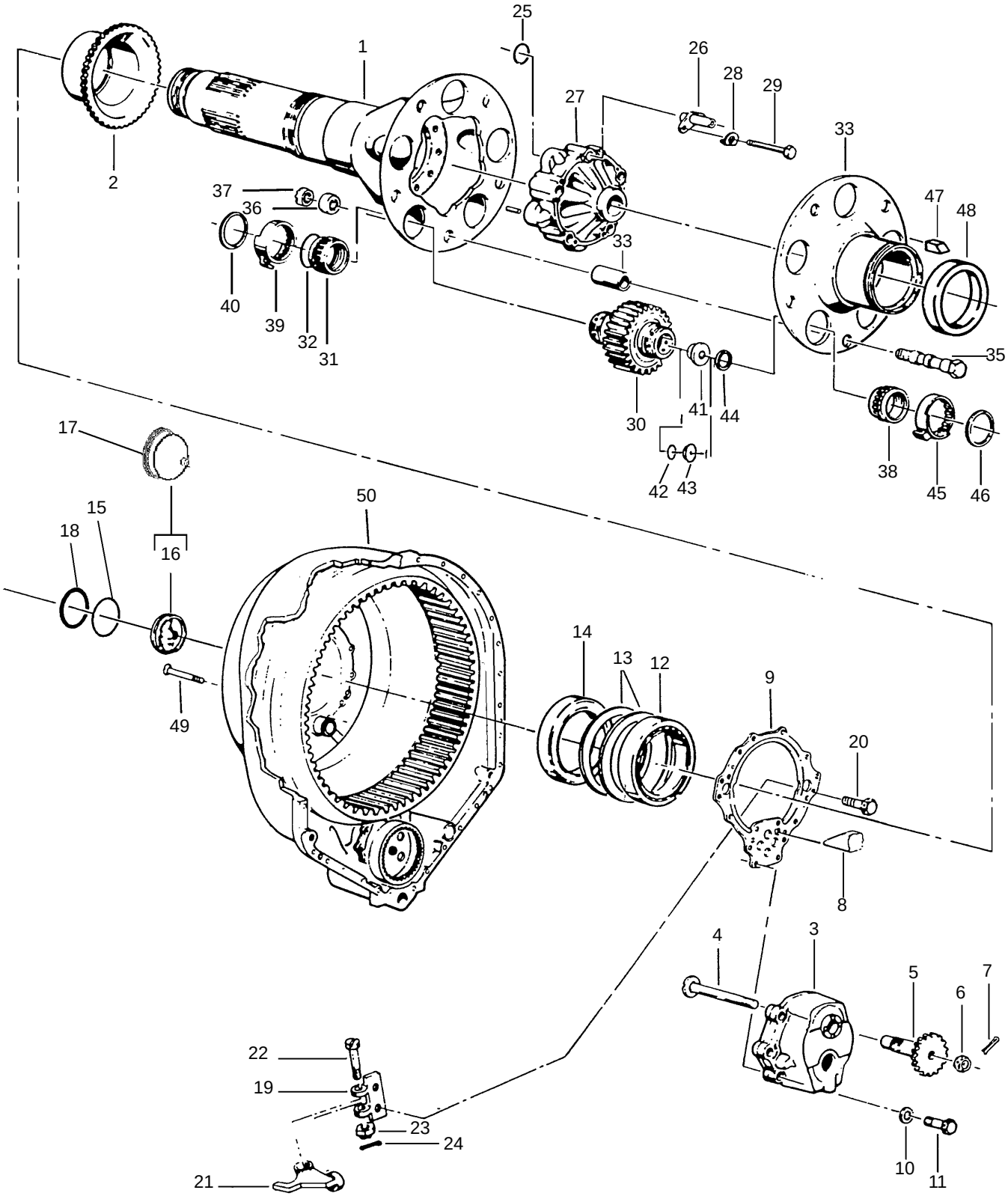

Figure 8. Propeller Shaft and Planetary Gear Assembly Details (Sheet 1 of 2)

MLD043AA

1. Propeller Shaft
2. Drive Gear (Scavenge Pump)
3. Scavenge Pump Assembly
4. Scavenge Pump Drive Bolt
5. Scavenge Pump Drive Gear
6. Nut
7. Cotter Pin
8. Key Assembly
9. Nose Bearing Plate
10. Washer
11. Bolt
12. Thrust Ball Bearing
13. Spring Tension Washers
14. Roller Bearing Inner Ring
15. Preformed Packing
16. Propeller Shaft Plug (PPC−121 NINC)
17. Propeller Shaft Plug (PPC−121 INC)
18. Internal Retaining Ring
19. Thrust Signal Lever Bracket
20. Bolt
21. Thrust Signal Lever
22. Screw
23. Nut
24. Cotter Pin
25. Preformed Packing
26. Sun Gear Lube Tube Assembly
27. Carrier Oil Delivery Flange Assembly
28. Key Washer
29. Bolt
30. Planet Gear and Bearing Assembly
31. Planet Front Splined Nut (LH Threads)
32. Preformed Packing
33. Rear Carrier
34. Carrier Spacer Block
35. Muted Bolt
36. Cup Washer
37. End Slotted Spanner Nut
38. Planet Rear Splined Nut (RH Threads)
39. Splined Lock
40. External Retaining Ring
41. Planet Journal Plug
42. Preformed Packing
43. Planet Journal Plug
44. Internal Retaining Ring
45. Splined Lock
46. External Retaining Ring
47. Key
48. Rear Carrier Front Bearing Inner Ring
49. Special Screw Assembly
50. Front Housing Assembly

Figure 8. Propeller Shaft and Planetary Gear Assembly Details (Sheet 2)

c. Install preformed packings (25, figure 8) into grooves of delivery flange.

NOTE

The delivery flange has a locating pin in mounting surface.

d. Install delivery flange on propeller shaft (figure 11).

e. Install key washers (28) and bolts (29). Alternate location of washer pre−bent sections as shown in figure 12. (QA)

f. Torque bolts 70−85 lb. in. and crimp washers (figure 12) using 6797589 tab bending fixture. (QA).

13. PLANET GEAR AND BEARING ASSEMBLIES, REAR CARRIER, AND REAR CARRIER FRONT BEARING INNER RING INSTALLATION. (figure 8)

Support Equipment Required

Part No./Type Designation	Nomenclature
SWE 102	Powerwrench
6796014	Plate, index, planet gear
6796561	Adapter, pivot, power wrench
6796631	Fixture, power wrench torque
6796634	Holder, planet gear bearing journal
6796835	Protector, planet gear
6797788	Wrench, spline
6799822	Wrench, spline
6799823	Adapter, power wrench
6799826	Plate, support, rear, planet gear
——	Gloves, insulated
——	Wrench, torque (0−300 lb ft)

Materials Required

Specification No./Part No.	Nomenclature
AS3085−039	Packing, preformed (5)
MIL−PRF−23699	Oil, lubricating
MIL−M−7866	Molybdenum Disulfide
6829920	Washer, cup (5)

a. Before assembly, check the following parts for proper fit limits (figure 1).

Description	Ref. No.
Bolt−Prop Shaft and Carrier Spacer Block	12
Bolt−Rear Carrier and Carrier Spacer Block	13
Planet Gear Journal−Prop Shaft	14
Planet Gear Journal−Rear Carrier	15
Plug−Planet Journal	16
Bearing−Carrier	19

CAUTION

Failure to obtain maximum spacing variation will result in inherent variations in load distribution between planetary gears.

b. Determine Maximum Spacing Variation using the following procedure before assembling the propeller shaft, planet gear and bearing assemblies, and rear carrier. Figure 13 is an example of a chart used to determine maximum spacing variation.

(1) Record Circumferential Deviation marked at each planet gear hole in the propeller shaft and rear carrier. The deviation is marked in increments of ten thousandths of an in. on the original part.

(2) Total the circumferential deviation of the propeller shaft and rear carrier. Record TOTAL deviation.

(3) Calculate AVERAGE CIRCUMFERENTIAL DEVIATION (divide total by two). Record results.

(4) Tabulate GEAR SEGREGATION NUMBER for each planet gear and bearing assembly (marked on each unit). Match largest gear segregation number of the five assemblies with largest plus average circumferential deviation obtained in step (3) above. Match the next largest segregation number with the next largest plus average circumferential deviation. Repeat until all five planet gear and bearing assemblies have been matched. Record results.

(5) Obtain ALGEBRAIC DIFFERENCE between each AVERAGE CIRCUMFERENTIAL DEVIATION and GEAR SEGREGATION NUMBER. Record results.

(6) Obtain MAXIMUM SPACING VARIATION by subtracting the MINIMUM value obtained in step (5) from MAXIMUM value obtained in step (5). Record result. This value shall not exceed 0.003 in.

Lubricating Oil, MIL−PRF−23699 2

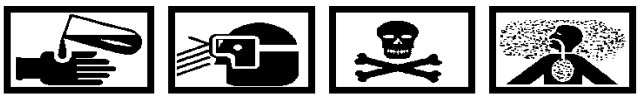

Molybdenum Disulfide Lubricant MIL−M−7866 19

c. Prepare a 50−50 lubricant mixture of MIL−M−7866 molybdenum disulfide and fresh engine oil (MIL−PRF−23699). Mix thoroughly.

d. Remove planet gear and bearing assemblies from 6796835 protector case.

e. Apply light coating of lubricant mixture to surfaces of planet gear and bearing assembly that mate with splined nuts (31 and 38, figure 8) propeller shaft flange, and rear carrier (33) flange.

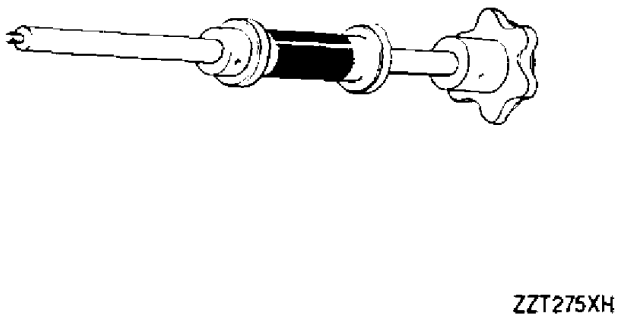

Figure 9. 6796467 or 23068568 Propeller Shaft Plug Puller

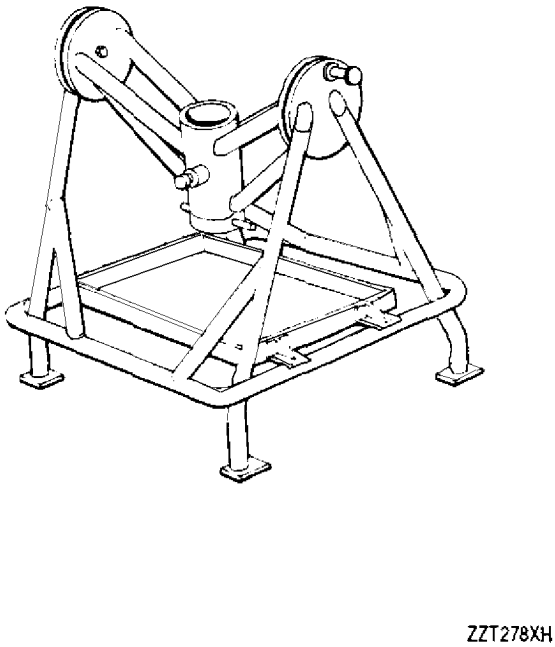

Figure 10. 6796834 Propeller Shaft and Planet Gear Stand

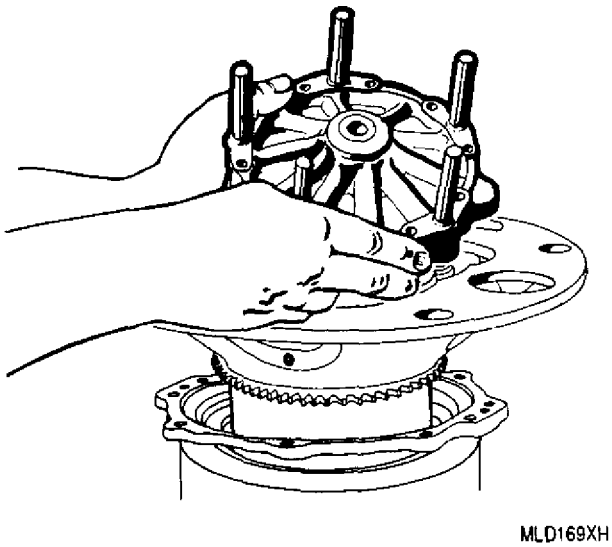

Figure 11. Installing Carrier Oil Delivery Flange and Lube Tubes

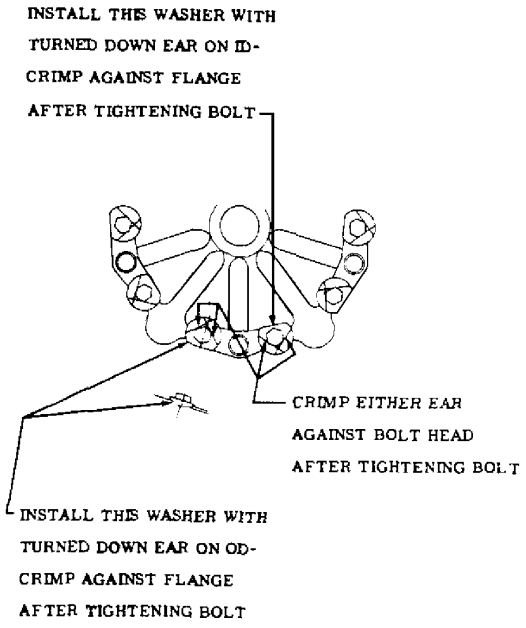

Figure 12. Key Washer Installation on Carrier Oil Delivery Flange

*SUB−STEP REF	DATA TO RECORD	PLANET GEAR HOLE NO.				
		1	2	3	4	5
(1)	PROP SHAFT DEVIATION	0.0000	−0.0007	−0.0002	+0.0006	+0.0005
(1)	REAR CARRIER DEVIATION	0.0000	+0.0009	0.0000	−0.0008	−0.0006
(2)	TOTAL	0.0000	+0.0002	−0.0002	−0.0002	−0.0001
(3)	AVERAGE CIRCUMFERENTIAL DEVIATION	0.0000	0.0001	−0.0001	−0.0001	−0.00005
(4)	GEAR SEGREGATION NUMBER	0.5502	0.5505	0.5500	0.5498	0.5500
(5)	ALGEBRAIC DIFFERENCE ((4) − (3))	0.5502	0.5504	0.5501	0.5499	0.55005
(6)	MAXIMUM VARIATION	0.5504 MAX − 0.5499 MIN. = 0.0005				
*REFER TO PARAGRAPH 13, STEP B, THIS WP.						

Figure 13. Example of Chart Determining Maximum Spacing Variation of Planet Gear and Bearing Assemblies

WARNING

Heated parts will cause skin damage (burns). Use clean insulated gloves to handle parts.

f. Heat propeller shaft flange to 300°F (149°C) maximum from 15 minutes to 4 hours with a locally fabricated heater. Heater consists of a plate which holds five heat lamps located to concentrate their heat at planet gear journal holes in flange.

NOTE

To distribute wear at previously unloaded areas, journals are positioned as shown in figure 15. If journal is a new replacement part, no punch mark should exist and specific positioning is not required.

g. Remove heater and install planet gear and bearing assemblies into prop shaft flange (figure 14). Take care to match each assembly with the planet gear hole determined in step (b). Ensure ends marked FRONT (on front face) face forward and punch marks on rear face are located as shown in figure 15. If possible, no punch marks should be closer than 50−70° to extreme outward radial position.

h. Install 6799826 support plate on rear journal (figure 16) and secure with rear splined nuts (figure 17).

i. Install front splined nuts (left hand thread) fingertight and rotate assembly front end up in stand.

j. Torque front splined nuts (31, figure 8) as follows:

(1) Install 6796561 power wrench pivot adapter on the support plate (figure 14).

(2) Install 6796634 holder and 6799822 splined nut wrench on planet gears (figure 19). Position SWE102 Powerwrench on adapter and wrench (figure 20).

(3) Install clamp to hold wrench (figure 21).

CAUTION

The front splined nuts have left hand threads, turn counterclockwise to tighten.

Check the powerwrench torque ratio and calculate for dial indicator torque.

(4) Gradually torque planet front splined nuts in a 1−3−5−2−4 sequence to 1450−1500 lb. ft. (left hand thread) (figure 22). (QA)

(5) Remove hold down clamp, Powerwrench, spanner nut wrench, holder, and pivot adapter.

(6) Install preformed packing (32, figure 8) and splined locks (39). Secure locks with external retaining rings (40).

k. Rotate assembly front end down in stand.

l. Remove rear splined nuts and 6799826 support plate.

m. Rotate assembly front end down in stand.

n. Install and secure rear carrier (33) as follows:

(1) Heat rear carrier to 300°F (149°C) maximum from 15 minutes to 4 hours in controlled oven and install on planet gear journals (figure 23). Match planet gear holes with assemblies as determined in step (b).

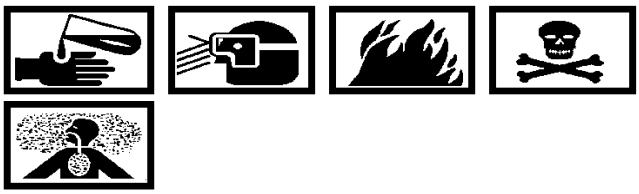

Lubricating Oil, MIL−PRF−23699 2

(2) Apply MIL−PRF−23699 engine oil to ID of spacer blocks (34, figure 8) and bolts (35). Insert the spacer blocks (figure 24).

(3) Install muted bolts (35, figure 8) with thread end down, install cup washers (36) and end slotted spanner nuts (37) (figure 25).

CAUTION

Be sure the rear carrier is seated. Nuts are not final torqued at this time.

(4) Slowly tighten nuts to draw and seat rear carrier against spacer blocks. Tighten nuts alternately to maintain uniform pressure and parallel downward movement (figure 26). Do not tighten to torque limits at this time.

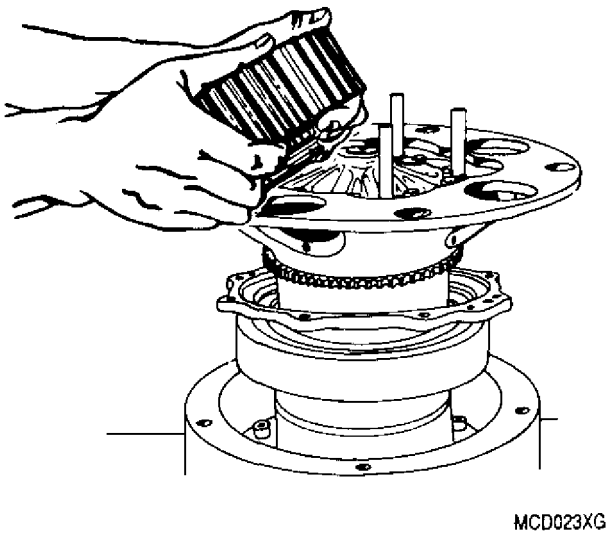

Figure 14. Installing Planet Gear and Bearing Assembly into Propeller Shaft Flange

(5) Install rear splined nuts (38, figure 8) on the journals.

(6) Assemble 6797788 spline nut wrench (figure 27) to the 6796631 power wrench torque fixture. Install assembly on rear carrier with wrench engaging splined nut.

(7) Remove detail nut from 6799823 power wrench adapter (figure 27). Install adapter through fixture and planet gear. Reinstall detail nut to secure spline wrench to rear spline nut.

(8) Place the SWE102 Powerwrench or equivalent in position on the adapter and fixture (figure 28). Gradually torque nuts in a 1−3−5−2−4 sequence to 950−1000 lb. ft. (right hand thread). (QA)

o. Restrain muted bolts (35, figure 8) and torque end slotted spanner nuts 100−150 lb. ft. Dimple cup washer into a scallop cutout. (QA)

p. Install journal plugs (41) and secure with internal retaining rings (44).

q. Install the planet journal plugs in each of the five (5) planet gears as follows:

(1) Install the preformed packing (42, figure 8) over the planet journal plug. (43, figure 8).

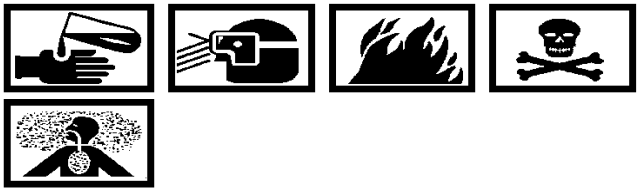

Lubricating Oil, MIL−PRF−23699 2

(2) Apply lubricant (MIL−PRF−23699) to preformed packing.

(3) Install the planet journal plug into the planet gear and bearing assembly (30, figure 8).

(4) Secure the planet journal plug(s) with the retaining ring (44, figure 8).

r. Install splined locks (45) and secure with external retaining rings (46).

s. Install key (47) in slot of rear carrier hub. Make sure key is correctly positioned as shown in figure 29. (QA)

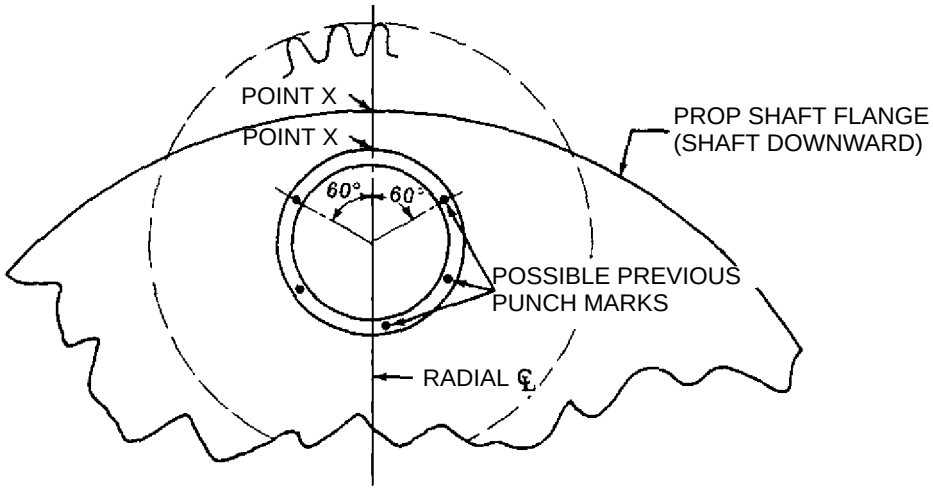

POSITION EACH JOURNAL SO THAT ANY PUNCH MARK IS LOCATED 60° ± 10° FROM THE EXTREME OUTWARD (RADIAL) POSITION (POINTS X ON JOURNAL AND/OR PROP SHAFT FLANGE. MAINTAIN THESE POSITIONS WHILE COMPLETING ENTIRE ASSEMBLY.

NOTE: IF ALL 6 POSSIBLE PUNCH MARK LOCATIONS HAVE BEEN UTILIZED, POSITION JOURNAL HALFWAY BETWEEN PREVIOUS 60° MARKINGS.

EXTREME OUTWARD (RADIAL) POSITION

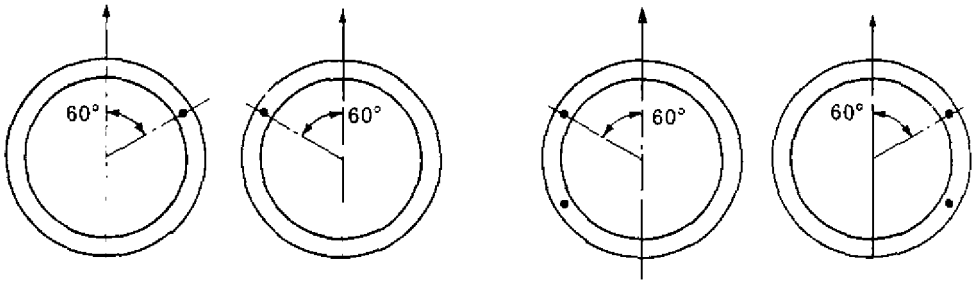

EXAMPLE OF POSITIONING JOURNAL WITH 1 PUNCH MARK (2 POSSIBLE WAYS)

EXAMPLE OF POSITIONING JOURNAL WITH 2 PUNCH MARK (2 POSSIBLE WAYS)

Figure 15. Positioning Planet Gear and Bearing Assembly Journals

MGD143XF

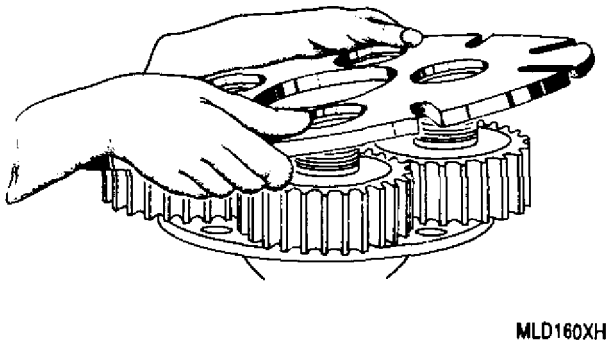

Figure 16. Installing 6799826 Support Plate on Rear Journals

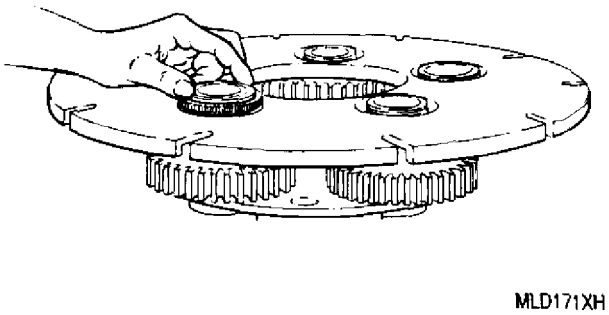

Figure 17. Securing Support Plate Using Rear Splined Nuts

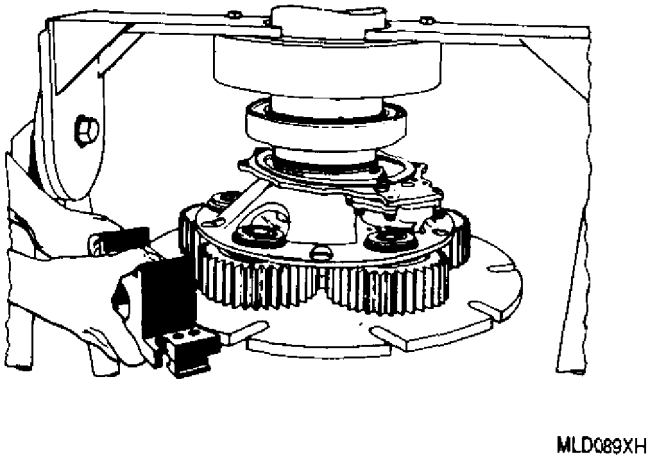

Figure 18. Installing 6796561 Pivot Adapter on Support Plate

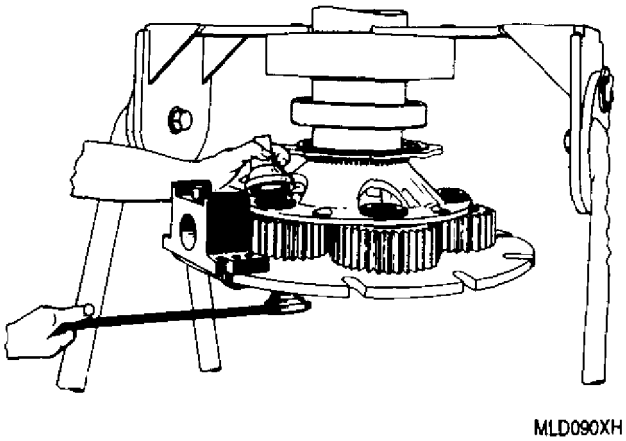

Figure 19. Installing 6796634 Holder and 6799822 Splined Nut Wrench

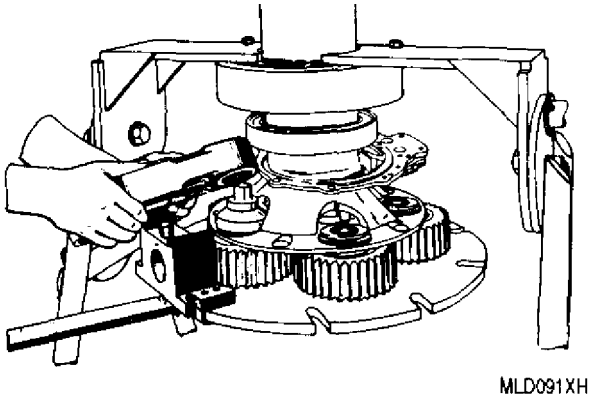

Figure 20. Installing SWE−102 Powerwrench or PLARADXVR−35 on Pivot Adapter and Splined Nut Wrench

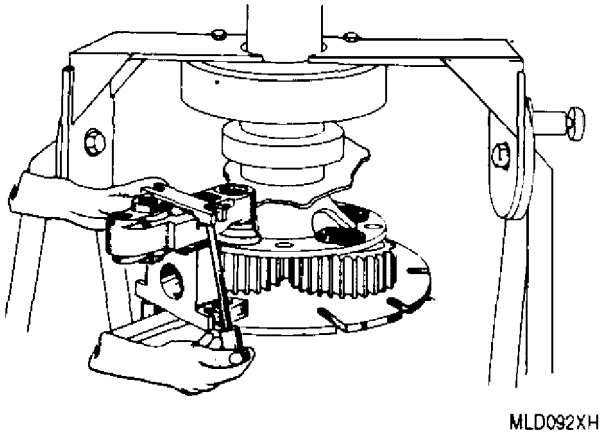

Figure 21. Installing Hold Down Clamp Detail of Pivot Adapter

WARNING

Heated parts will cause damage to skin (burns). Handle heated parts with clean insulated gloves.

t. Heat rear carrier bearing inner ring (48, figure 8) per NAVAIR 02B−5DG−6−1, WP 016 00, to 325°F (163°C) maximum for 15 minutes to 4 hours. Install ring on rear carrier hub with tapered edge facing up and key slot in ring engaging key in hub.

u. Rotate each planet gear so that each tooth space identified with an O−mark is facing center of propeller shaft.

CAUTION

Do not remove the index plate until after installation of the propeller shaft in the front housing.

v. Carefully install 6796014 index plate (figure 30) inside rear carrier. Each tooth space marked with an O−mark shall mate with a tooth on index plate marked with an O. This procedure results in maximum pitch diameter runout of planet gears occurring at the same phase during operation.

14. PROPELLER SHAFT, DRIVE GEAR, NOSE BEARING PLATE AND SCAVENGE PUMP ASSEMBLY, THRUST BALL BEARING, ROLLER BEARING INNER RING, AND THRUST SIGNAL BRACKET AND LEVER ASSEMBLY. (figure 8)

Support Equipment Required

Part No./Type Designation	Nomenclature
6796467 or 23068568	Puller, propeller shaft plug
6796834	Stand buildup, propeller shaft and planetary gear
——	Gloves, insulated
——	Wrench, torque (0−150 lb. in.)

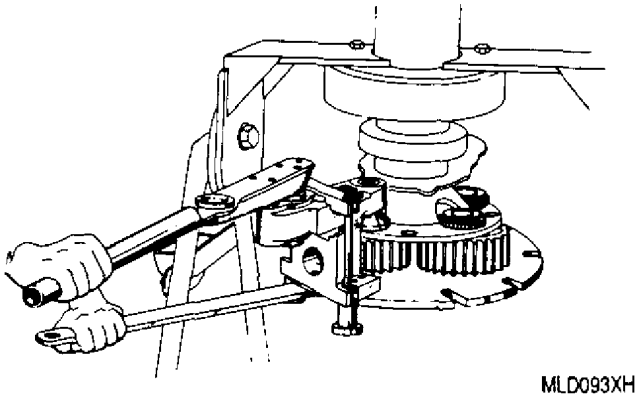

Figure 22. Torquing Planet Gear Front Splined Nut

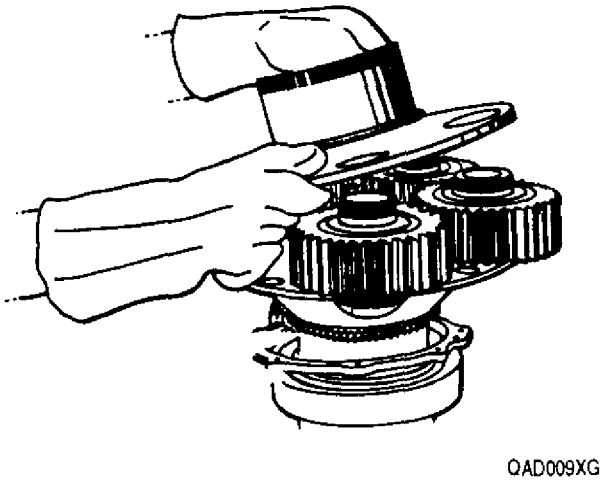

Figure 23. Installing Rear Carrier on Rear Journals

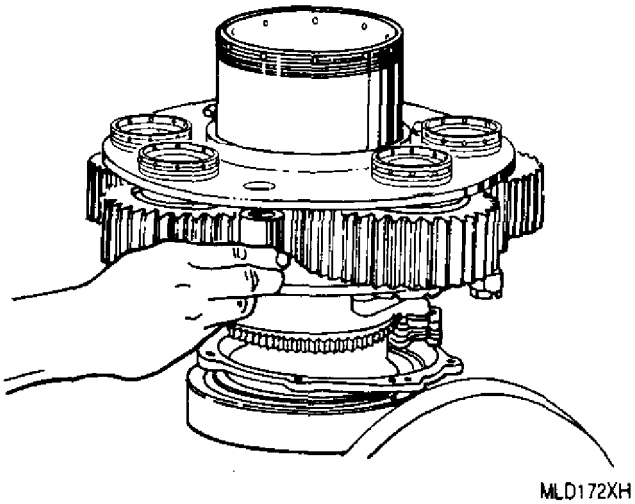

Figure 24. Installing Spacer Blocks

Materials Required

Specification No./Part No.	Nomenclature
AS3209−235	Packing (1)
MS20995C32	Lockwire
MS24665−150	Pin, cotter (1)
MS24665−151	Pin, cotter (1)

a. Before assembly, check the following parts for proper fit limits (figure 1).

Description	Ref. No.
Plug−Shaft	1
Roller bearing−Shaft	2
Ball bearing−Shaft	3
Roller Bearing−Cage	4
Pump drive gear−Shaft	6
Shaftgear−Bushing	53
Shaftgear−Drive gear	54
Shaftgear−Bushing	55

NOTE

Check propeller shaft serial number for the letter P. When letter P is etched adjacent to or after serial number do not use shaft. Reject shaft and select a shaft without letter P.

b. Install propeller shaft on a bench with front end up.

WARNING

Heated parts will cause skin damage (burns). Use clean insulated gloves to handle parts.

c. Heat propeller shaft scavenge pump drive gear (2 , figure 8) per NAVAIR 02B−5DG−6−1, WP 016 00, to 300°F (149°C) maximum for 15 minutes to 4 hours. Install gear on propeller shaft (1). Be sure that gear is seated firmly on shaft.

d. Insert pump drive bolt (4) through pump assembly (3). Install pump gear (5) on the drive bolt and secure it with nut (6). Torque nut 50−58 lb in. and secure with cotter pin (7). Check by hand for free operation of pump gears. (QA)

e. Attach the thrust signal bracket (19) to nose bearing plate (9) using bolts (20). Torque bolts 120−150 lb in. and lockwire. (QA)

f. Install nose bearing locking key assembly (8) in slot on nose bearing plate (9).

g. Attach scavenge pump assembly to nose bearing plate using washers (10) and bolts (11). Torque bolts 70−85 lb in. and lockwire. (QA)

h. Install nose bearing plate and scavenge pump assembly over propeller shaft with pump rearward.

WARNING

Heated parts will cause skin damage (burns). Use clean insulated gloves to handle parts.

i. Install thrust ball bearing (12) on propeller shaft as follows:

(1) Heat thrust bearing (12) inner rings per NAVAIR 02B−5DG−6−1, WP 016 00, to 300°F (149°C) maximum for 15 minutes to 4 hours.

(2) Install rear half of inner ring on propeller shaft. Seat firmly against drive gear (2).

CAUTION

Be sure outer ring key slot faces rear−ward.

(3) Install thrust bearing balls and outer ring, with key slot rearward, against the rear inner ring.

(4) Install front half of bearing inner ring.

j. Install front roller bearing inner ring (14) with oil hole aft. Seat ring against thrust bearing (12).

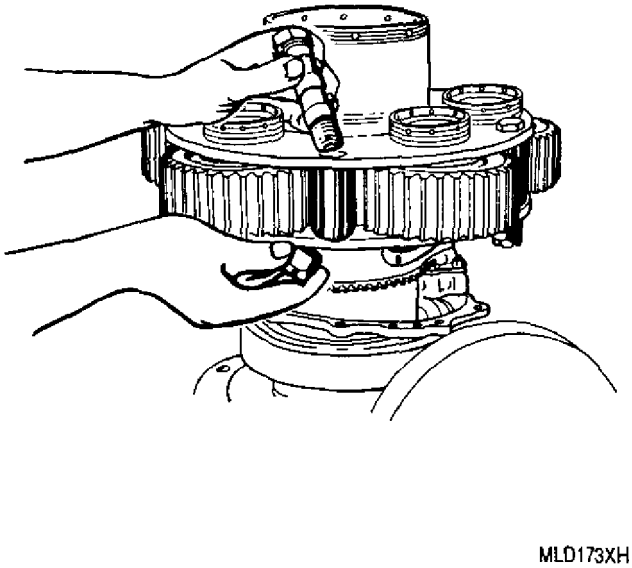

Figure 25. Installing Muted Bolt and End Slotted Spanner Nut

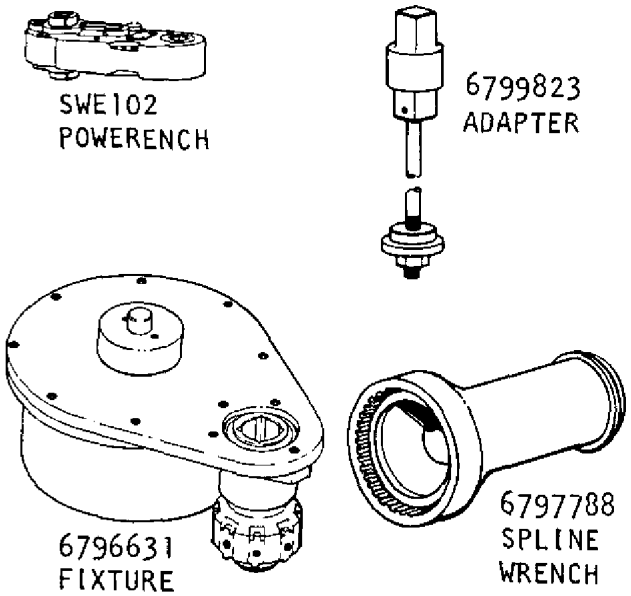

Figure 27. Tooling Required to Torque Planet Gear Rear Splined Nut

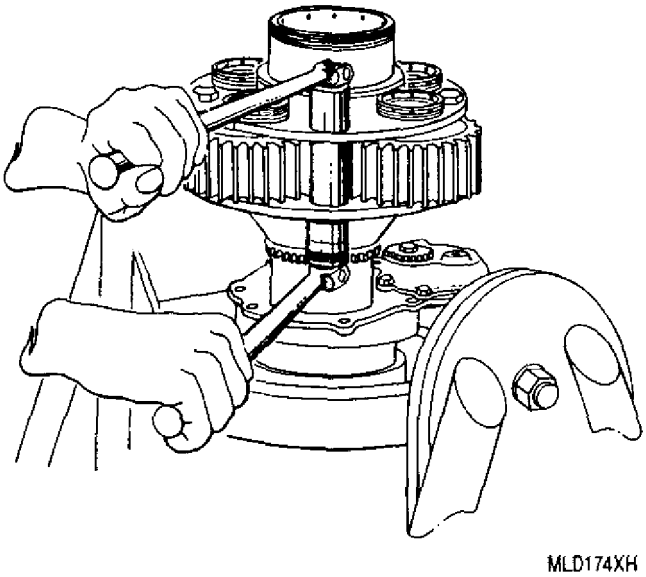

Figure 26. Tightening Muted Bolt and End Slotted Spanner Nut

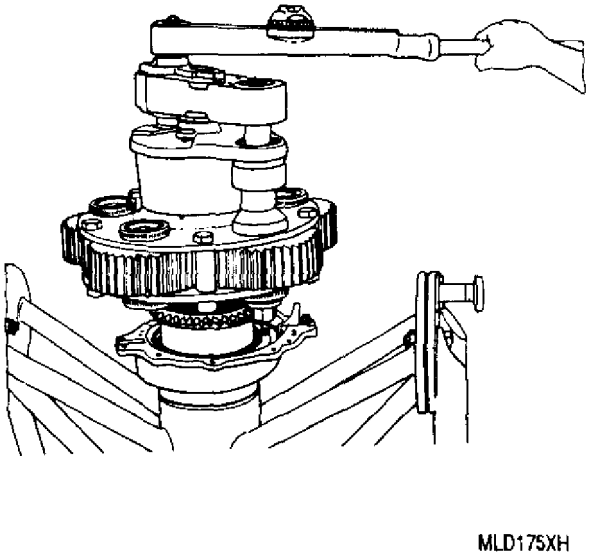

Figure 28. Torquing Planet Gear Rear Splined Nut

k. Install propeller shaft plug (16) into propeller shaft as follows:

Lubricating Oil, MIL−PRF−23699 2

(1) Apply a light coat of MIL−PRF−23699 lubricating oil to new preformed packing (15) and mating diameters. Install preformed packing (15) on shaft plug.

(2) Thread propeller shaft plug onto 6796467 or 23068568 propeller shaft puller plug puller (figure 9) and install into shaft (convex side inward for plug P/N 23073304) until seated. If installing plug P/N 23073304 then puller P/N 23068568 should be used.

(3) Remove puller and install internal retaining ring (18, figure 8) to secure plug.

l. Install propeller shaft assembly in 6796834 propeller shaft and planetary gear buildup stand (figure 10).

m. Install thrust signal lever (21, figure 8) on thrust signal lever bracket using slotted−head screw (22) and nut (23). Torque nut 45−55 lb. in. and secure with cotter pin (24). (QA)

15. PROPELLER SHAFT AND PLANETARY GEAR ASSEMBLY INSTALLATION.

a. Refer to PROPELLER SHAFT INSTALLATION, NAVAIR 02B−5DG−6−1, WP 040 00.

16. **MAIN DIAPHRAGM ASSEMBLY.**

17. MAIN DIAPHRAGM ASSEMBLY AND INSTALLATION.

a. Before assembly, check the following parts for proper fit limits (figure 1).

Description	Ref. No.
Bearing − Cage	18
Bearing (out−of−round) − Cage	50

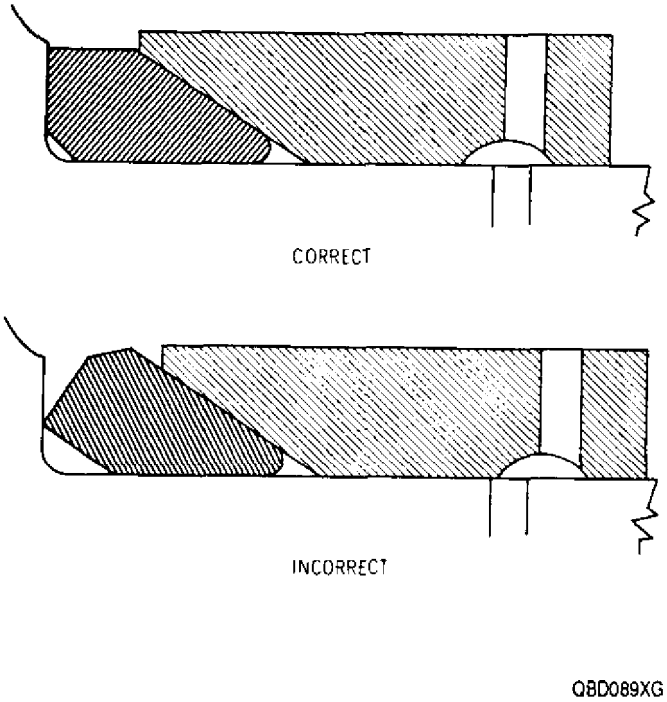

Figure 29. Installing Rear Carrier Bearing Inner Ring Key

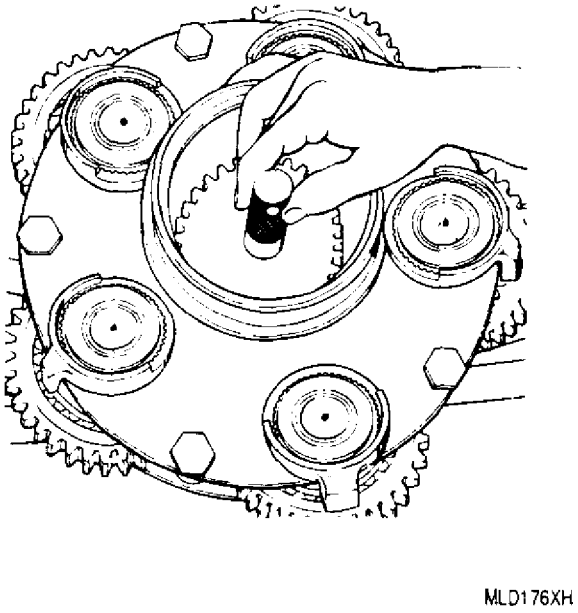

Figure 30. Installing 6796014 Planetary Gear Index Plate

b. Assemble and install main diaphragm. Refer to NAVAIR 02B−5DG−6−1, WP 040 00.

18. PINION GEAR ASSEMBLY, MAIN DRIVE GEAR, AND SUN GEAR INSTALLATION.

a. Before assembly, check the following parts for proper fit limits (figure 1).

Description	Ref. No.
Bearing (out−of−round) − Gear	20
Sun Gear Hub Flange − Gear	22
Bearing − Pinion Shaftgear	46
Bearing − Cage	47
Bearing − Pinion Shaftgear	49

NOTE

Ensure T56−A−427 pinion gear assembly has been balanced per WP 041 00 prior to installation.

b. Install pinion gear assembly, main drive gear, and sun gear. Refer to NAVAIR 02B−5DG−6−1, WP 040 00.

19. **REAR HOUSING AND (INNER) DIAPHRAGM ASSEMBLY.**

20. REAR HOUSING INSTALLATION INTO TURNOVER STAND, AND PLUGS AND OIL PRESSURE RELIEF VALVE INSTALLATION. (figure 31)

Support Equipment Required

Part No./Type Designation	Nomenclature
6796987	Stand, turnover, engine component assembly and disassembly
6797706	Adapter, trunnion, rear case to 6796887 stand (2)

a. Install the rear housing in 6796987 engine component assembly and disassembly turnover stand using two 6797706 trunnion adapters (figure 31).

b. Rotate housing with rear end up.

c. Install plugs and oil pressure relief valve assembly. Refer to NAVAIR 02B−5DG−6−1, WP 037 00.

d. Rotate rear housing forward side up.

21. OIL PUMP IDLER GEAR INSTALLATION.

a. Before installation of gear, check the following parts for proper fit limits (figure 1).

Description	Ref. No.
Bearing − Journal	74
Bearing − Gear	75
Journal − Housing	76

b. Install journal, bearing, and gear. Refer to NAVAIR 02B−5DG−6−1, WP 040 00.

22. OIL PUMP DRIVE GEAR INSTALLATION.

a. Before installation of gear, check the following parts for proper fit limits (figure 1).

Description	Ref. No.
Bearing − Shaft	77
Bearing − Cage	78
Cage − Housing	79

b. Install gear, bearing, and cage. Refer to NAVAIR 02B−5DG−6−1, WP 040 00.

23. TACHOMETER DRIVE GEAR INSTALLATION (TWO PLACES).

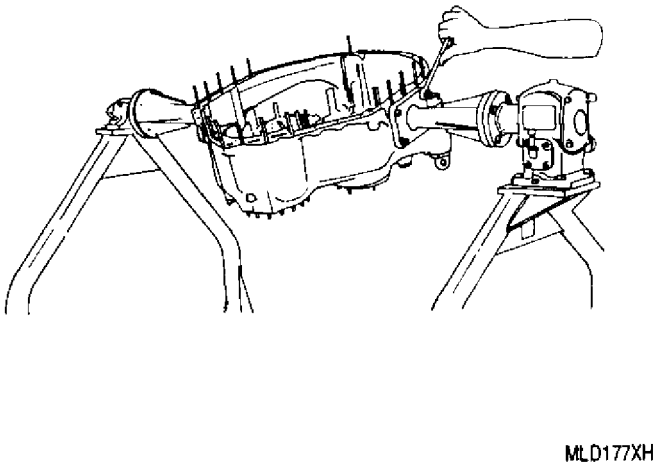

Figure 31. Installing Rear Housing in 6796987 Engine Component Stand

a. Before installation of gears, check the following parts for proper fit limits (figure 1).

Description	Ref. No.
Bearing − Cage	68
Bearing − Shaft	69
Bearing − Cage	70
Bearing − Shaft	71
Shaft − Spacer	72
Cage − Housing	73

b. Install gears, bearings, and cages. Refer to NAVAIR 02B−5DG−6−1, WP 040 00.

24. TACHOMETER DRIVE IDLER GEAR INSTALLATION.

a. Before installation of gear, check the following parts for proper fit limits (figure 1).

Description	Ref. No.
Bearing − Cage	62
Bearing − Gear	63
Bearing − Cage	64
Bearing − Gear	65
Spacer − Gear	66
Cage − Housing	67

b. Install gear, bearings, and cage. Refer to NAVAIR 02B−5DG−6−1, WP 040 00.

25. CONE TYPE PROPELLER BRAKE ASSEMBLY INSTALLATION. (figure 32)

Support Equipment Required

Part No./Type Designation	Nomenclature
——	Wrench, torque (0−150 lb in.)

Materials Required

Specification No./Part No.	Nomenclature
MS20995C32	Lockwire
——	Sealant, Permatex 1372
6877242−001	Packing (1)
——	Ice, dry

a. Before installation of propeller brake assembly, check the following parts for proper fit limits (figure 1).

Description	Ref. No.
Bearing − Flange	36
Bearing − Shaft	38
Flange − Housing	39
Tube − Plug	40
Tube − Bushing	41
Bearing − Shaft	43
Bearing − Cage	44

b. Install preformed packing (2, figure 32) in rear housing.

c. Install bearing flange (3) into rear housing as follows:

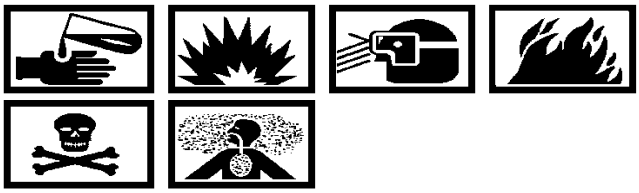

Sealing Compound Permatex 1372 or Loctite 30588 **33**

(1) Coat threads of bolts (11) with Permatex 1372.

Dry Ice, BB−C−104 **56**

CAUTION

The propeller brake inner cone, bearing flange, and release spring are a serialized matched set. Do not intermix components between sets.

The inner cone and bearing flange front faces are matched marked with the letter O after acceptable bench test at manufacture. The O−marks shall be indexed when installed.

(2) Freeze flange with dry ice to facilitate installation and prevent scoring the housing.

(3) Install flange making sure it is completely seated and bolt holes are aligned.

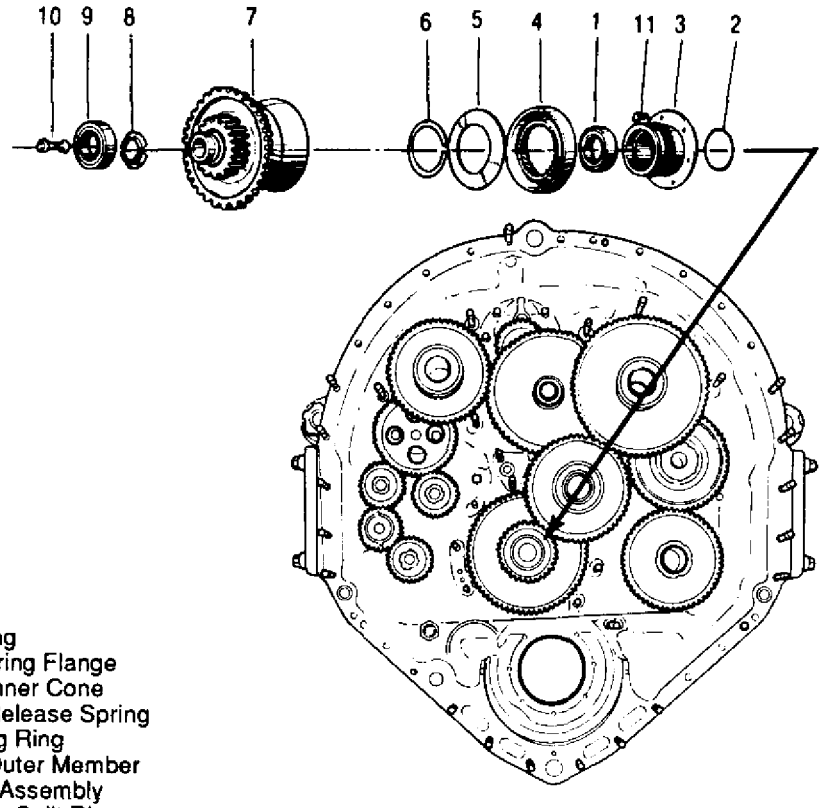

Figure 32. Cone Type Propeller Brake Assembly Details

(4) Install bolts and allow part temperature to stabilize.

(5) Torque bolts 70−85 lb in. and lockwire. (QA)

d. Install inner cone (4) on bearing flange (3) with O−mark on cone front face aligned with O−mark on flange front face.

e. Install release spring (5) and external retaining ring (6) on bearing flange. Ensure that the word FRONT on the convex side of release spring is away from inner cone.

f. Install external split ring (8) on starter shaft of assembly (7). Install front bearing (9) with numbered side facing forward and seated against ring.

g. Install rear bearing (1) on starter shaft of assembly with numbered side facing rearward and seated against shaft shoulder.

h. Install proper brake outer member and starter shaft assembly on inner cone (4).

i. Install propeller brake oil tube (10).

26. GENERATOR SHAFT AND HYDRAULIC PUMP DRIVE GEAR INSTALLATION.

a. Before installation of gear, check the following parts for proper fit limits (figure 1).

Description	Ref. No.
Bearings − Cage	89
Bearings − Shaft	90
Spacer − Shaft	91
Cage − Housing	92

b. Install gear, spacer, and cage. Refer to NAVAIR 02B−5DG−6−1, WP 040 00.

27. HYDRAULIC PUMP DRIVE IDLER GEAR INSTALLATION.

a. Before installation of gear, check the following parts for proper fit limits (figure 1).

Description	Ref. No.
Bearing − Gear	98
Bearing − Flange	99
Flange − Housing	100

b. Before installation of gear, check the following parts for proper fit limits (figure 1).

Description	Ref. No.
Bearing − Flange	86
Bearing − Gear	87
Flange − Housing	88

c. Install gear and bearings. Refer to NAVAIR 02B−5DG−6−1, WP 040 00.

28. HYDRAULIC PUMP IDLER GEAR INSTALLATION.

a. Before installation of gear, check the following parts for proper fit limits (figure 1).

Description	Ref. No.
Bearing − Cage	26
Bearings − Gear	27
Bearing − Cage	29

b. Install gear and bearings. Refer to NAVAIR 02B−5DG−6−1, WP 040 00.

29. HYDRAULIC PUMP DRIVE GEAR ASSEMBLY INSTALLATION.

a. Before installation of gear assembly, check the following parts for proper fit limits (figure 1).

Description	Ref. No.
Bearing − Cage	57
Bearing − Shaft	58
Bearing − Cage	60
Bearing − Shaft	61

b. Install gear assembly and bearings. Refer to NAVAIR 02B−5DG−6−1, WP 040 00.

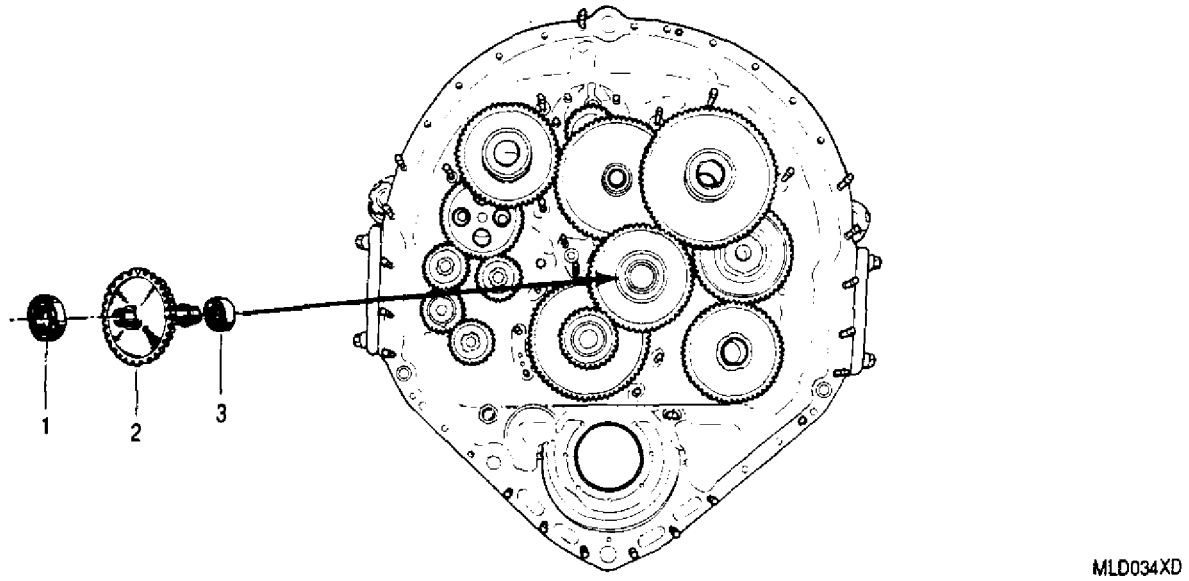

1. Roller Bearing 2. Main Idler Gear 3. Roller Bearing

Figure 33. Main Idler Gear Details

30. ALTERNATOR DRIVE GEAR ASSEMBLY INSTALLATION.

a. Before installation of drive gear assembly, check the following parts for proper fit limits (figure 1).

Description	Ref. No.
Bearing − Cage	81
Bearing − Shaft	82
Bearing − Cage	84
Bearing − Shaft	85

b. Install gear assembly and bearings. Refer to NAVAIR 02B−5DG−6−1, WP 040 00.

31. MAIN IDLER GEAR INSTALLATION. (figure 33)

Support Equipment Required

Part No./Type Designation	Nomenclature
——	Gloves, insulated

a. Before installation of gear, check the following parts for proper fit limits (figure 1).

Description	Ref. No.
Bearing − Cage	31
Bearing − Gear (main idler)	32
Bearing − Gear (main idler)	33
Bearing − Cage	34

WARNING

Heated parts will cause skin damage (burns). Handle parts with clean insulated gloves.

b. Heat rear bearing inner ring (3, figure 33) per NAVAIR 02B−5DG−6−1, WP 016 00, to 325°F (163°C) maximum for 15 minutes to 4 hours. Installation gear (2), numbered side facing rear−ward.

c. Heat front bearing (1) inner ring per NAVAIR 02B−5DF−6−1, WP 019 00, to 325°F (163°C) maximum for 15 minutes to 4 hours. Install it on gear, numbered side facing forward.

d. Install the rear outer race and roller assembly (3) onto the inner ring and gear assembly and install into the rear housing. Install front bearing (1) outer ring and rollers on the inner ring and shaft.

32. INNER DIAPHRAGM INSTALLATION. (figure 34)

Support Equipment Required

Part No./Type Designation	Nomenclature
3738	Holder, starter shaft
6795893	Fixture, dimpling, cup washer
6795894	Wrench, end slot spanner nut
6796019	Wrench, nut, accessory drive shaft bearing
6796074	Wrench, oil pump drive journal and tachometer drive idler spanner nut
6796089	Attachment, prop brake release
6796182	Spline, starter shaft turning
6799535	Wrench, end slot spanner nut
6799537	Fixture, dimpling, cup washer
23032404	Spline, starter shaft turning
23034201	Fixture, checking, accessory drive pads concentricity and squareness
——	Wrench, torque (0−500 lb in.)
——	Wrench, torque (500−1500 lb in.)

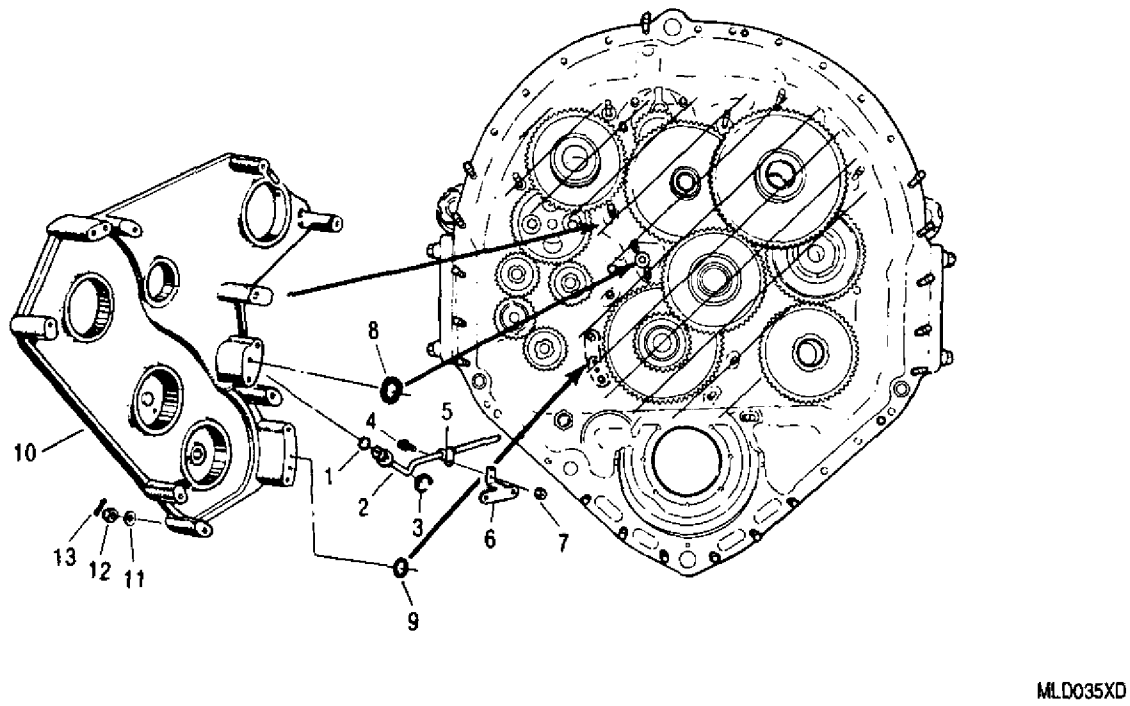

1. Preformed Packing
2. Tachometer Bearing Oil Tube
3. Internal Retaining Ring
4. Bolt
5. Clamp
6. Bracket
7. Nut
8. Seal Washer
9. Preformed Packing
10. Inner Diaphragm
11. Washer
12. Nut
13. Cotter Pin

Figure 34. Inner Rear Housing Diaphragm Details

Materials Required

Specification No./Part No.	Nomenclature
AS3085−008	Packing (1)
AS3085−114	Packing (1)
MS24665−151	Pin, cotter (13)
6898211	Washer, seal (1)

a. Install preformed packing (1, figure 34) on tachometer oil tube (2). Install tube into port of inner diaphragm (10) and secure with ring (3).

b. Install 3738 starter shaft holder (figure 35) in starter shaft spline and secure with work nuts.

NOTE

The following steps c. through h. are torque procedures for the accessory drive spanner nuts previously tightened fingertight.

c. Install inner diaphragm onto rear housing as follows:

(1) Install seal washer (8, figure 34) and preformed packing (9) into recesses in rear housing.

(2) Install inner diaphragm over studs.

(3) Install washers (11) and nuts (12) fingertight.

(4) Seat inner diaphragm by torquing nuts, in sequence at locations 8, 10, and 13 (figure 36), 100 lb in. then loosen to zero torque. (QA)

(5) Torque all nuts 120−180 lb in. in numerical sequence shown (figure 36). (QA)

NOTE

The propeller brake apply spring tends to prevent free seating of the inner diaphragm.

d. Torque generator shaft spanner nuts as follows:

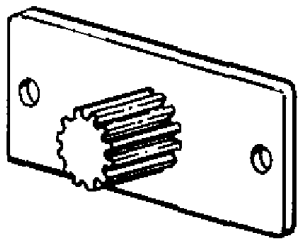

ZZT015XH

Figure 35. 3738 Starter Shaft Holder

(1) Torque standard spanner nut 1200 lb in. using 6796019 wrench. Loosen and retorque 900−1200 lb. in. Bend washer tabs to secure nut. (QA)

(2) Torque end slotted spanner nut 1200 lb in. using 6795894 wrench. Loosen and retorque 900−1200 lb. in. Dimple cup washer into a scallop cutout of nut using 6795893 dimpling fixture. (QA)

NOTE

Hydraulic pump shaft spanner nuts may be torqued with 3738 starter shaft holder securely fastened to bench.

e. Torque hydraulic pump shaft spanner nuts as follows:

(1) Torque standard spanner nut 1200 lb. in. using 6796019 wrench. Loosen and retorque 900−1200 lb. in. Bend washer tabs to secure nut. (QA)

(2) Torque end slotted spanner nut 1200 lb in. using 6795894 wrench. Loosen and retorque 900−1200 lb in. Dimple cup washer into a scallop cutout of nut using 6795893 dimpling fixture. (QA)

f. Torque oil pump idler journal spanner nuts as follows:

(1) Torque standard spanner nut 420 lb in. using 6796074 wrench. Loosen and retorque 240−420 lb in. Bend washer tabs to secure nut. (QA)

(2) Torque end slotted spanner nut 420 lb in. using 6799535 wrench. Loosen and retorque 240−420 lb in. Dimple cup washer into a scallop cutout of nut using 6799537 dimpling fixture. (QA)

g. Torque oil pump drive shaft spanner nuts as follows:

(1) Torque standard spanner nut 420 lb in. using 6796074 wrench. Loosen and retorque 240−420 lb in. Bend tabs of washer to secure nut. (QA)

(2) Torque end slotted spanner nut 420 lb in. using 6799535 wrench. Loosen and retorque 240−420 lb in. Dimple cup washer into a scallop cutout of nut using 6799537 dimpling fixture. (QA)

h. Torque tachometer drive shaft spanner nuts (two places) as follows:

(1) Torque standard spanner nuts 420 lb in. using 6796074 wrench. Loosen and retorque 240−420 lb in. Bend tabs of washers to secure nuts.

(2) Torque end slotted spanner nuts 420 lb in. using 6799535 wrench. Loosen and retorque 240−420 lb in. Dimple cup washers into a scallop cutout of nuts using 6799537 dimpling fixture. (QA)

i. Remove 3738 starter shaft holder.

j. Pivot (do not bend) tachometer bearings oil tube (2, figure 34) from over the journals and gears. Secure tube to bracket (6) with clamp (5), bolt (4) and nut (7). Torque nut 37−42 lb in. (QA)

k. Rotate rear housing rear end up. Install oil seals at starter, alternator, hydraulic pump (two places), and tachometer (two places) drive locations. Refer to NAVAIR 02B−5DG−6−1, WP 033 00.

l. Perform accessory drives−to−pads concentricity and squareness runout check and propeller brake operation check as follows:

(1) Remove plug facing downward below the oil pump mounting pad.

(2) Install 6796089 propeller brake release attachment (figure 38) into port at lower right hand side of rear housing.

(3) Connect shop air to release attachment at apply 60−100 psig pressure to propeller brake.

(4) Using 23032404 or 6796182 starter shaft turning spline (figure 39) attempt to turn starter shaft. If shaft does not turn operation is unsatisfactory. Remove propeller brake to determine cause. (QA)

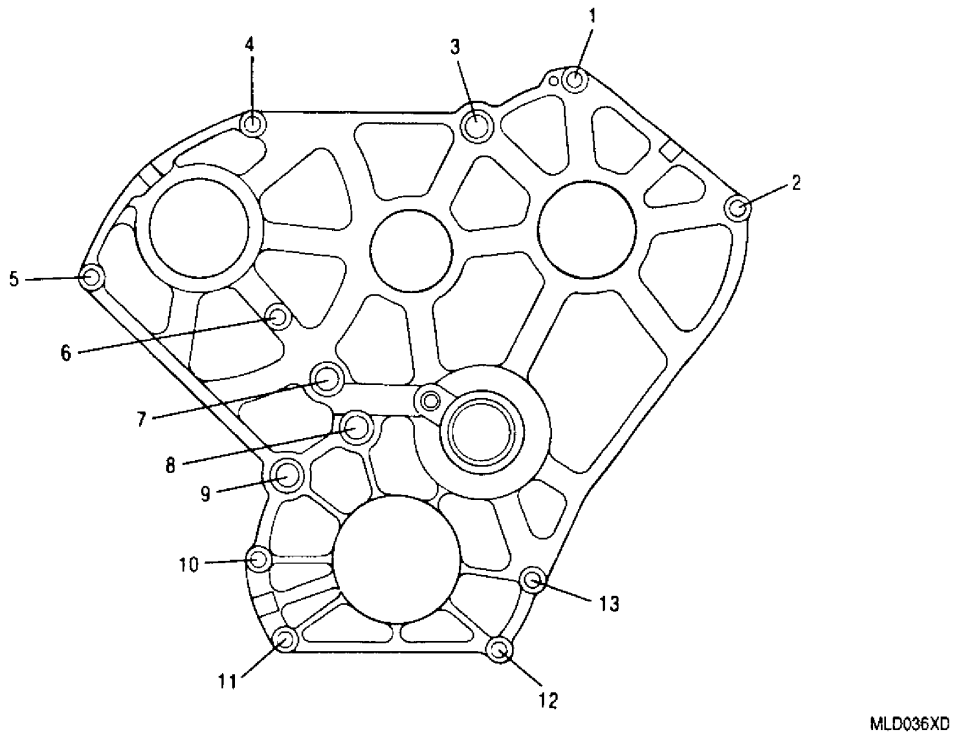

Figure 36. Inner Diaphragm Nut Tightening Sequence

NOTE

Squareness is measured with the indicator resting on accessory mounting pad. Concentricity is measured with indicator resting inside bore diameter.

(5) Insert 23034201 fixture in starter spline. With propeller brake still released, slowly rotate gear train 360° with spline adapter tool to perform accessory drives−to−pads concentricity and squareness check (table 1). Record result.

(6) If concentricity and squareness runout check is within limits, check torque on nuts (12, figure 34) and install cotter pins (13). Bend both tangs as shown (figure 37). (QA)

(7) If concentricity and squareness runout check is not within limits, loosen appropriate nuts, adjust out−of−limits drives (gear) and retorque nuts using proper torque sequence. If shifting of diaphragm does not bring reading to within specified limits, perform bearing bore alignment check per WP 037 00. Continue adjustments until acceptable concentricity and squareness is obtained. Install cotter pins (13, figure 34) and bend both tangs as shown (figure 37). (QA)

(8) Disconnect shop air and remove 6796089 propeller brake release attachment.

(9) Install internal plugs and lockwire. Refer to NAVAIR 028−5DG−6−1, WP 037 00.

33. **REAR HOUSING ASSEMBLY INSTALLATION.** (figures 40 and 41)

Support Equipment Required

Part No./Type Designation	Nomenclature
23032404 (6796182)	Spline, starter shaft turning
6799782	Adapter, lifting, reduction gear rear housing assembly.
——	Indicator dial and weighted base
——	Wrench, torque (0−300 lb in.)

Table 1. Accessory Drives−to−Pads Concentricity and Squareness Runout Check.

Accessory Drive	Runout Feature	Limits (in.)	
		Concentric to Pad Bore	Square to Pad Face
Starter	PD of spline	Within 0.004 FIR to 0.147 min depth	Within 0.006 FIR
Alternator	PD of spline	Within 0.008 FIR to 0.250 min depth	Within 0.006 FIR
Hydraulic Pump (2 places)	PD of spline	Within 0.004 FIR to 0.147 min depth	Within 0.006 FIR

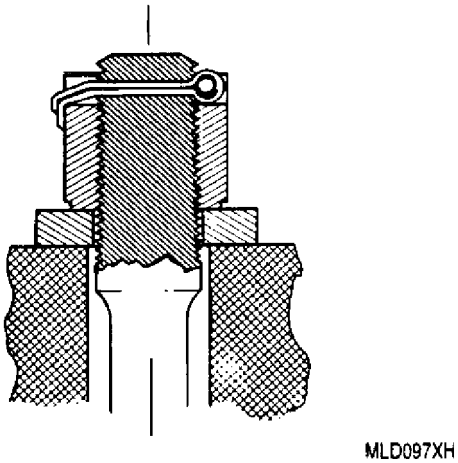

Figure 37. Inner Rear Housing Diaphragm Cotter Pin Installation

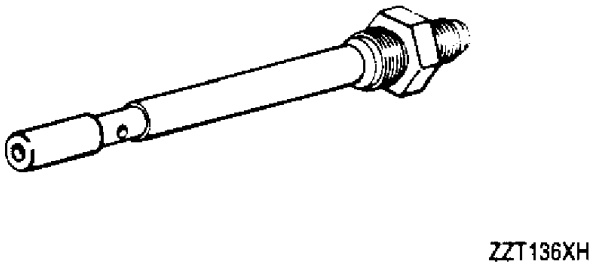

Figure 38. 6796089 Prop Brake Release Attachment

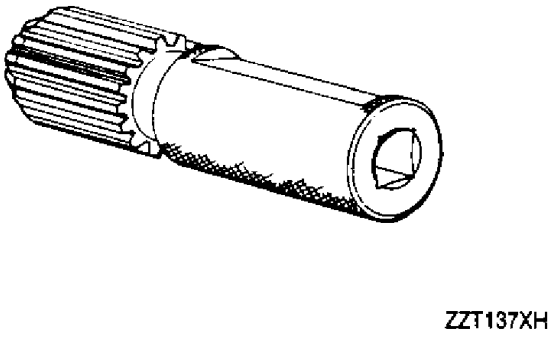

Figure 39. 23032404 or 6796182 Starter Shaft Turning Spline

Materials Required

Specification No./Part No.	Nomenclature
AS3085−122	Packing (2)
AS3085−129	Packing (1)
NS165	Compound, Anti−seize (Never Seez)
MIL−PRF−23827	Grease, lubricating
PL32M Hylomar	Sealing compound

CAUTION

Avoid excessive amounts of sealant that will squeeze out into the inner chamber and contaminate the oil system.

NOTE

Failure to apply sealant bead between bolt holes/studs, and the inside edge of diaphragm−to−rear housing splitline surface can result in oil leakage past bolts/studs.

Do not apply sealant to O−ring grooves. Sealant in O−ring groove will prevent proper sealing of O−ring.

Sealing Compound PL32M Hylomar 41

a. Apply a 1/8 inch diameter maximum bead of Hylomar PL32M sealant between the inside edge of the diaphragm−to−rear housing splitline surface and the bolt holes/studs.

b. Install three preformed packings in the diaphragm−to−rear housing splitline surface.

c. Position the rear housing assembly front end down in the stand.

d. Attach the 6799782 rear housing lifting adapter on the starter pad (figure 40).

e. Lift rear housing from stand and carefully lower in onto the front housing and main diaphragm.

f. As the rear housing is lowered, check for proper entry of pinion rear bearing into the rear housing bearing cage. (Be sure locking key in bearing cage engages key slot in rear bearing outer ring). Rotate starter shaft using 23032404 or 6796182 starter shaft turning spline, as housing is being lowered to engage outer member gear teeth with the main accessory drive gear. (QA)

g. Remove hoist and lifting adapter.

h. Install the splitline bolts, studs washers and nuts to requirements of figure 41.

Anti−seize Compound (Never Seez) NS165 31

i. Lubricate bolt and stud threads with Anti−seize Compound (Never Seez) NS165.

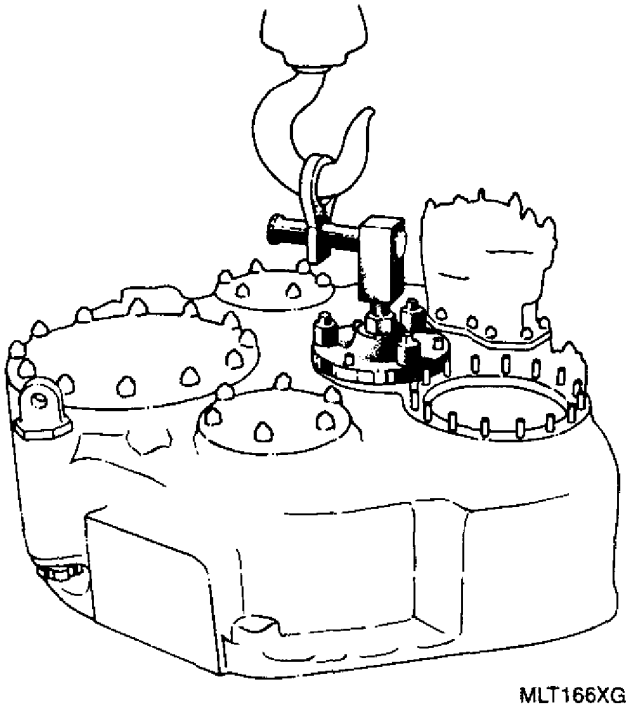

Figure 40. Handling Rear Housing Using 6799782 Lifting Adapter

General Purpose Grease MIL−PRF−23827 20

j. Pack the cavity of bearing bolt (bolt and bearing assembly), installed at hole location 31 (figure 41), with grease conforming to MIL−PRF−23827.

k. Tighten splitline nuts as follows:

(1) Torque nuts at location 4, 5, 8, 16, 23, and 32 to 85 lb in. (figure 41).

(2) Torque all remaining nuts in a counterclockwise direction around the circumference to 85 lb in.

(3) Retorque nuts at hole locations 4 and 5 (figure 41) to 120−150 lb in. Torque remaining nuts to 140−170 lb in.

(4) Wait at least one hour, and then retorque nuts at hole locations 4 and 5 (figure 41) to 20−150 lb. in. Retorque remaining nuts to 140−170 lb. in.

(5) Repeat step (4) until specified torque is maintained. (QA)

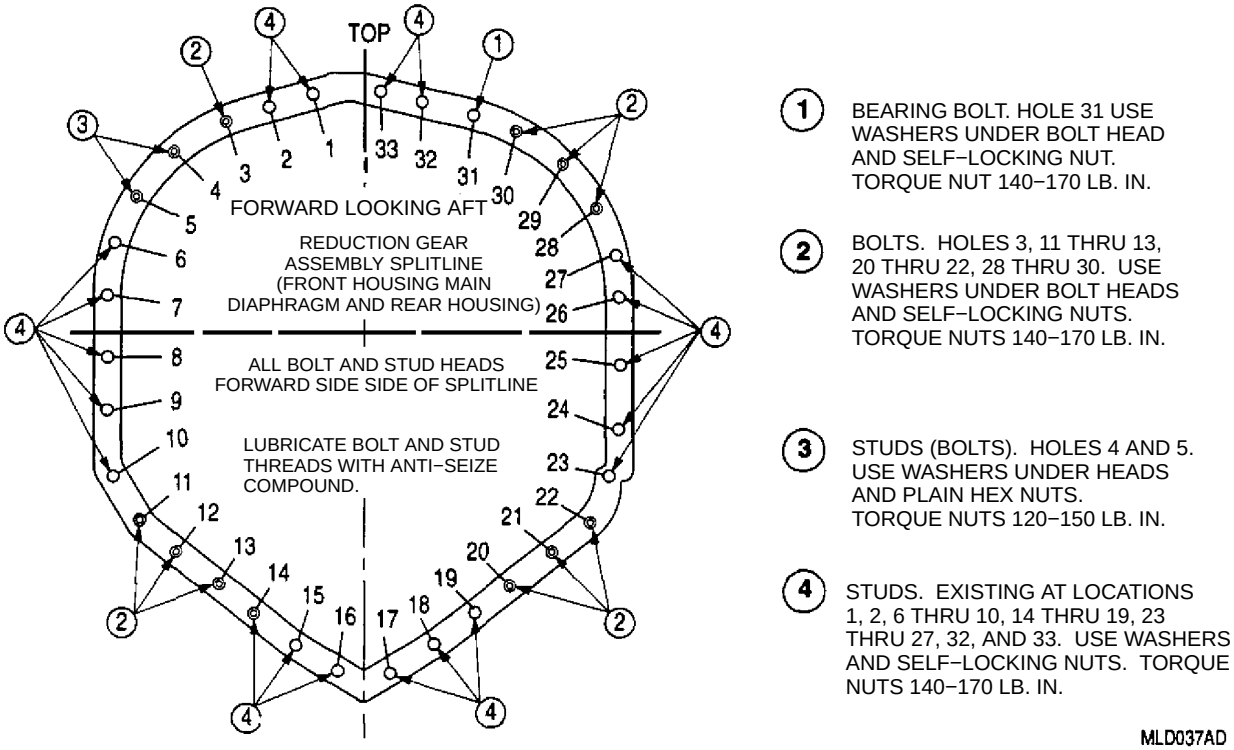

Figure 41. Reduction Gear Splitline

l. Check end play of pinion gear using a standard dial indicator and weighted base. Push pinion gear downward to remove any end play. Position dial indicator plunger on rear face of pinion gear shaft and zero out. Manually lift (by hand) pinion gear and observe reading. Minimum acceptable end play is 0.020 in. (QA)

m. Coat six socket head screws (0.250−28) with Hylomar PL32M sealant. Install screws in the three jackscrew holes in each of the front and rear housing flanges.

34. **REAR HOUSING EXTERNAL COMPONENTS.**

35. OIL PUMP AND FILTER ASSEMBLY INSTALLATION. Refer to NAVAIR 02B−5DG−6−1, WP 040 00.

36. OIL PRESSURE RELIEF VALVE ASSEMBLY INSTALLATION. Refer to NAVAIR 02B−5DG−6−1, WP 040 00.

37. SCAVENGE OIL OUTLET MAGNETIC PLUG BODY ASSEMBLY INSTALLATION. Refer to NAVAIR 02B−5DG−6−1, WP 040 00.

38. MOUNTING PAD COVER INSTALLATION. Refer to NAVAIR 02B−5DG−6−1, WP 040 00.

39. ACCELEROMETER AND MOUNTING BRACKET INSTALLATION. Refer to NAVAIR 02B−5DG−6−1, WP 040 00.

40. **REDUCTION GEAR PLUGS.**

41. REAR HOUSING PLUGS INSTALLATION. Refer to NAVAIR 028−5DG−6−1, WP 037 00.

42. FRONT HOUSING PLUGS INSTALLATION. Refer to NAVAIR 02B−5DG−6−1, WP 037 00.

43. **FRONT HOUSING EXTERNAL COMPONENTS.**

44. THRUST SENSITIVE SIGNAL SYSTEM ACTUATOR INSTALLATION. Refer to NAVAIR 02B−5DG−6−1, WP 036 00.

45. THRUST SENSITIVE SWITCH ASSEMBLY INSTALLATION. Refer to NAVAIR 02B−5DG−6−1, WP 080 00.

46. ELECTRICAL (PROPELLER) FEATHER SOLENOID ASSEMBLY INSTALLATION. Refer to NAVAIR 02B−5DG−6−1, WP 079 00.

47. PROPELLER CONTROL LINKAGE INSTALLATION. Refer to NAVAIR 02B−5DG−6−1, WP 027 00.

48. REDUCTION GEAR EYEBOLT AND STRUT INSTALLATION. Refer to NAVAIR 02B−5DG−1, WP 027 00.

49. **PROPELLER SHAFT AXIAL MOVEMENT (END PLAY) CHECK.**

Support Equipment Required

Part No./Type Designation	Nomenclature
——	Indicator dial

a. The propeller shaft axial movement (end play) shall be measured whenever the reduction gear assembly exceeds vibration limits or there is reason to believe there is excessive end play of the propeller shaft.

CAUTION

The propeller shaft end play check will be accomplished without disturbing the shaft and associated parts. Disturbing the parts before or during the check may result in an erroneous measurement.

b. Visually inspect to ensure thrust nut lock, thrust nut, propeller shaft oil seal, and thrust plate are properly installed. Do not disturb these parts before or during the check.

c. Install dial indicator at forward end of propeller shaft in a manner that total end play can be measured.

d. Take end play measurement as follows:

(1) Push shaft to its maximum rearward position and set indicator to zero.

(2) Pull shaft to its maximum forward position and record reading. Maximum allowable end play is 0.041 in.

(3) Push shaft back to its maximum rearward position to confirm measurement. Indicator should read zero.

(4) Repeat axial movement check as necessary to confirm accurate measurement.

e. Reject reduction gear assembly when end play exceeds 0.041 in.

DEPOT MAINTENANCE

ASSEMBLY

ACCESSORY DRIVE HOUSING ASSEMBLY

Reference Material

Maintenance . . . . . NAVAIR 02B−5DG−6−1
Accessory Drive Housing Assembly−Assembly . . . . . WP 044 00

Alphabetical Index

Subject **Page No.**

Accessory Drive Housing Assembly 2
Assembly 2
Filter Bypass Valve Test 2
Introduction 2

Record of Applicable Technical Directives

None

1. **INTRODUCTION.**

2. This work package (WP) provides the instructions for assembly of the accessory drive housing and testing of the filter bypass valve used on the T56−A−427 turboprop engine.

3. **ACCESSORY DRIVE HOUSING ASSEMBLY.**

4. ACCESSORY DRIVE HOUSING ASSEMBLY − ASSEMBLY.

a. For assembly procedures refer to NAVAIR 02B−5DG−6−1, WP 044 00.

5. ACCESSORY DRIVE HOUSING ASSEMBLY − FILTER BYPASS VALVE TEST.

Support Equipment Required

Part No./Type Designation	Nomenclature
2550961	Fixture, test
6799866	Stand assembly, test, fuel accessories

Materials Required

Specification No./Part No.	Nomenclature
MIL−C−7024 Type II	Fluid, calibrating

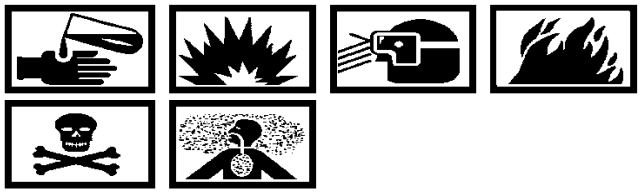

Calibrating Fluid MIL−C−7024, Type II 57

NOTE

Do not disassemble filter bypass valve after pressure check is acceptable.

a. Test filter bypass valve as follows:

(1) Install cover on 6799866 test stand (figure 1).

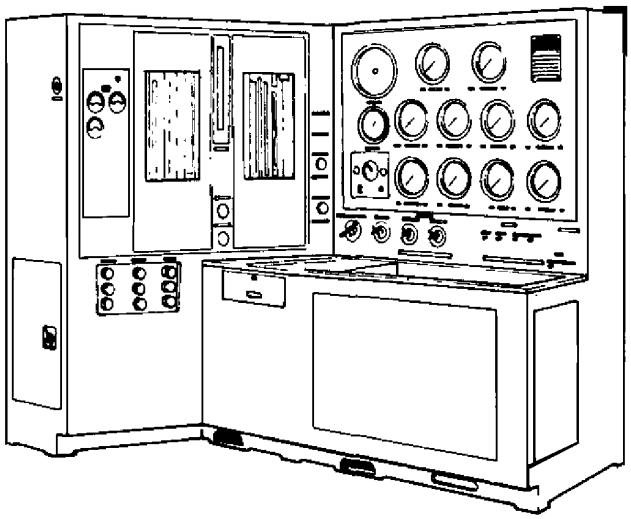

ZZT379XG

Figure 1. 6799866 Fuel Accessory Test Stand

(2) Plug filter cavity OIL IN passage.

(3) Using 2550961 test fixture, attach fixtures to cover so that oil filter is up and tilted.

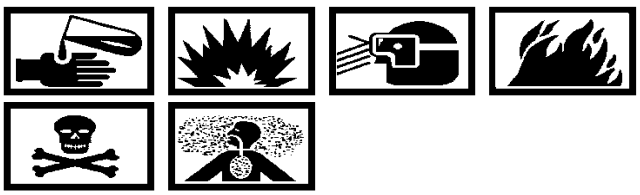

Calibrating Fluid MIL−C−7024, Type II 57

(4) Attach test hose and apply MIL−C−7024 Type II calibrating fluid, at 70−90°F (21−32°C) to pressure oil passage on oil pump mounting pad at 10 psi.

(5) Leakage past filter bypass valve must not exceed 6 cc per hour. (Duration of test to be at least five minutes.)

DEPOT MAINTENANCE

INSPECTION AND REPAIR

REDUCTION GEAR TO POWER SECTION STRUT ASSEMBLY

Reference Material

Plating and Surface Treatment of Parts . . . . . WP 018 00

Alphabetical Index

Subject **Page No.**

Introduction 2
Reduction Gear to Power Section Strut Assembly 2
Inspection 2
Repair 2

Record of Applicable Technical Directives

None

1. **INTRODUCTION.**

2. This work package (WP) provides the instructions for inspection and repair of the reduction gear to power section strut assembly used on the T56−A−427 turboprop engine.

3. **REDUCTION GEAR TO POWER SECTION STRUT ASSEMBLY.**

4. STRUT ASSEMBLY − INSPECTION.

a. Inspect strut assembly. Refer to table 1.

5. STRUT ASSEMBLY − REPAIR.

Materials Required

Specification No./Part No.	Nomenclature
MIL−R−5031, Class A	Wire, welding
——	Paint, aluminum polytherm

WARNING

Heated parts will cause skin damage (burns). Use clean insulated gloves to handle parts.

a. Repair strut assembly. Refer to Disposition column, table 1.

b. Replace assemblies not within serviceable limits after repair.

Table 1. Reduction Gear to Power Section Strut Assembly − Inspection and Repair

Condition	Serviceable Limits	Repairable Limits	Disposition
Wear: Fretting, galling, nicks or dents in tubular section.	0.020 in. maximum depth with blending in an area less than 0.5 in. in diameter. Repairs shall be a minimum of 2.00 in. apart along tubular axis and only one repair per cross sectional circumference. Outside dia of tubular section of tie strut shall be 2.000 ± 0.010 in. along length of tube except in repair area being blended.	Same as serviceable limits.	Rework by blending. After rework apply a coat of aluminum polytherm paint, and air dry.
Fretting, galling, nicks or dents in non−working surfaces of clevis section.	0.020 in. max depth with blending.	Same as serviceable limits.	Rework by blending. After rework, apply a coat of aluminum polytherm paint, and air dry.
Fretting, galling, nicks or dents on outer working surfaces of clevis section.	0.003 in. maximum depth with blending.	Exceeds serviceable limits.	Outer working surface of each clevis leg may be reduced to a minimum thickness of 0.420 in. prior to plating.

Table 1. Reduction Gear to Power Section Strut Assembly − Inspection and Repair (contd)

Condition	Serviceable Limits	Repairable Limits	Disposition
0.6245 − 0.6255 in. diameter hole (rear end).	0.6265 in., measured on greatest diameter.	0.6305 in. maximum.	Enlarge hole to ensure a minimum plating thickness of 0.0005 in. after finishing. Electrolytic nickel plate or electroless nickel plate hole (WP 018 00). Ream hole to 0.6245−0.6255 in. diameter through and countersink 90° to a 0.677 in. diameter on both sides.
0.6875 − 0.6885 in. diameter hole (front end).	0.6895 in., measured on greatest diameter.	0.6925 in. maximum.	Enlarge hole to ensure a minimum plating thickness of 0.0005 in. after finishing. Electrolytic nickel plate or electroless nickel plate hole (WP 018 00). Ream hole to 0.6875 − 0.6885 in. diameter through and countersink 90° to a 0.750 − 0.765 in. diameter on outer side face.
0.5610 − 0.5620 in. diameter hole (front end).	0.5630 in., measured on greatest diameter.	0.5660 in. maximum.	Enlarge hole to ensure a minimum plating thickness of 0.0005 in. after finishing. Electrolytic nickel plate or electroless nickel plate hole (WP 018 00). Ream hole to 0.5610 − 0.5620 in. diameter through and countersink 90° to a 0.622−0.637 in. diameter on inside face.
Tongue slot width, each end.	0.629 in. maximum.	0.637 in. maximum.	Strip plating and machine slot as required to remove uneven wear or scoring. Electrolytic nickel plate or electroless nickel plate (WP 018 00). Plating thickness shall not exceed 0.006 in. Slot width after plating shall be 0.625 −0.627 in.
Corrosion.	Not serviceable.	Any Corrosion.	Clean or strip plating from corroded areas. Electroless nickel plate part to a thickness of 0.001−0.0015 in. (WP 018 00).
Spline teeth at pin hole will not retain pin.	Not serviceable.	Weld repair teeth.	Using MIL−R−5031, Class 4 welding wire and GTAW−MA method, weld a bead over worn teeth. Heat treat at 1000° F (538° C) for one hour. Air cool at room temperature. Machine new teeth in welded area per parts drawing.

DEPOT MAINTENANCE

INSPECTION AND REPAIR

PROPELLER SHAFT

Reference Material

Internal and External Splines − Repair . . . . . WP 047 00
Gears . . . . . WP 016 00
Magnetic Particle and Fluorescent Penetrant Inspection − Procedures . . . . . WP 017 00
Plating and Surface Treatment of Parts . . . . . WP 018 00
Identification Marking Methods . . . . . AS 478

Alphabetical Index

Subject **Page No.**

Introduction 2
Propeller Shaft 2
Inspection 2
Inspection for Presence of Chrome−Plate Repairs 2
Propeller Shaft Flange and Planet Gear Bores Repair 3
Planetary Gear Bore Repair 4
Propeller Shaft Flange − Repair 3
Repair 2

Record of Applicable Technical Directives

None

1. **INTRODUCTION.**

2. This work package (WP) provides the instructions for inspection and repair of propeller shaft PN 6877513 used in reduction gear assemblies on the T56−A−427 turboprop engine.

3. **PROPELLER SHAFT.**

4. INSPECTION FOR PRESENCE OF CHROME PLATE REPAIRS. No chrome−plate repairs of Diameters A, B, and C (figure 1) are authorized on shafts to be installed in reduction gear assemblies used on T56−A−427 engine.

a. Inspect shaft front cone seating area, bearings journal, and rear cone seating area for chrome−plate repair. Reject shafts having chrome−plate repairs in these areas. These shafts, if serviceable, may be used in T56−A−14 and T56−A−16 engines.

5. PROPELLER SHAFT − INSPECTION.

a. Inspect propeller shaft. Refer to table 1.

b. Refer to WP 017 00 for magnetic particle inspection (MPI) procedures.

6. PROPELLER SHAFT − REPAIR.

a. Repair propeller shaft. Refer to Disposition column, table 1.

b. Replace shafts not within serviceable limits after repair.

Table 1. Propeller Shaft − Inspection and Repair

Condition	Serviceable Limits	Repairable Limits	Disposition
CAUTION Engine/Propeller operation with loose thrust nut, loss of propeller retaining nut torque, improperly installed thrust lock or without a propeller rear cone installed may impart high cycle fatigue, which could lead to propeller shaft cracking. Engine/propeller operation under these conditions shall be condemned.			
Propeller shaft painted red and/or mutilated by Intermediate or Organizational Level.	Not serviceable.	Not repairable.	Condemn part.
MPI. Non−metallic inclusions parallel with shaft axis:			
Cutting entirely across edge of threaded section.	No Indications	Not repairable.	Condemn shaft exceeding serviceable limits.
Splined section.	1/2 in. max length if open less than 1/4 in. long.	Not repairable.	Condemn shaft exceeding serviceable limits.
Larger flange radii.	Open 1/8 in. max length	Not repairable.	Condemn shaft exceeding
Shaft section.	1.00 in. max length.	Not repairable.	Condemn shaft exceeding serviceable limits.
Any location, if showing fatigue−type progression.	Not serviceable.	Not repairable.	Condemn shaft exceeding serviceable limits.
Metal pick−up.	Not serviceable.	Any metal pick−up.	Remove by hand polishing.

Table 1. Propeller Shaft − Inspection and Repair (contd)

Condition	Serviceable Limits	Repairable Limits	Disposition
Shaft corrosion, fretting, pitting, nicks or grooves in Diameter A, B, or C (figure 1).	Max depth of 0.003 in. without sharp edges.	Not repairable.	Reject shaft exceeding serviceable limits. Retain for repair and use in T56−A−14 and T56−A−16 engines.
Spline wear−except Spline O (figure 1).	Refer to WP 047 00.	Refer to WP 047 00.	Condemn shaft not within serviceable limits after repair.
Loss of silver plating on the flange:			
By peeling.	Not serviceable.	Any peeling.	Restore silver plate. Refer to paragraph 7, this WP.
By wear.	Slight loss of plating due to normal wear in area of planet gear holes (either side of flange).	Extreme abnormal wear.	Restore silver plate. Refer to paragraph 7, this WP.
By minor nicks, scratches or fretting.	Not serviceable,	0.002 in. max depth or covering a maximum of 20% of contacting surface (mating with journal or nut).	Remove damage by light polishing or blending.
Propeller shaft concentricity.	0.002 in. FIR. Refer to paragraph 7, this WP.	Not repairable.	Condemn shaft exceeding serviceable limits.
Shaft galling at Diameter A, B, or C (figure 1).	Not serviceable.	Within dimensional limits (figure 1).	Smooth surface to remove any evidence of galling.
Worn planet gear bores.	2.198 in. max.	Exceeds serviceable limits.	Repair damaged bores. Refer to paragraph 9, this WP.
Dents or nicks in propeller shaft threads.	Not serviceable.	0.070 in. max depth.	Blend out by stoning or other appropriate method. Blended area on any thread shall not exceed 10% of circumference or extend below minor diameter of thread.
Fretting corrosion of Spline O (figure 1).	Not serviceable.	0.010 in. max depth.	Smooth contour to remove any evidence of fretting corrosion.
Spline O (figure 1) wear corrosion, pitting and nicks.	0.005 in. max depth without sharp edge.	0.005 in. max depth with sharp edge.	Smooth contour to remove any sharp edge.

7. PROPELLER SHAFT FLANGE AND PLANET GEAR BORES − REPAIR. When both the planet gear bores and propeller shaft flange require repair, the gear bores should be repaired first.

8. Propeller Shaft Flange − Repair. (figures 1 and 2)

a. Record each planet hole position number and its circumferential deviation measurement. This data will be required to re−mark the flange after repair.

b. Strip silver plate (WP 018 00) from flange.

c. Grind as necessary to remove nicks, pitting, scratches or fretting. The following limits apply:

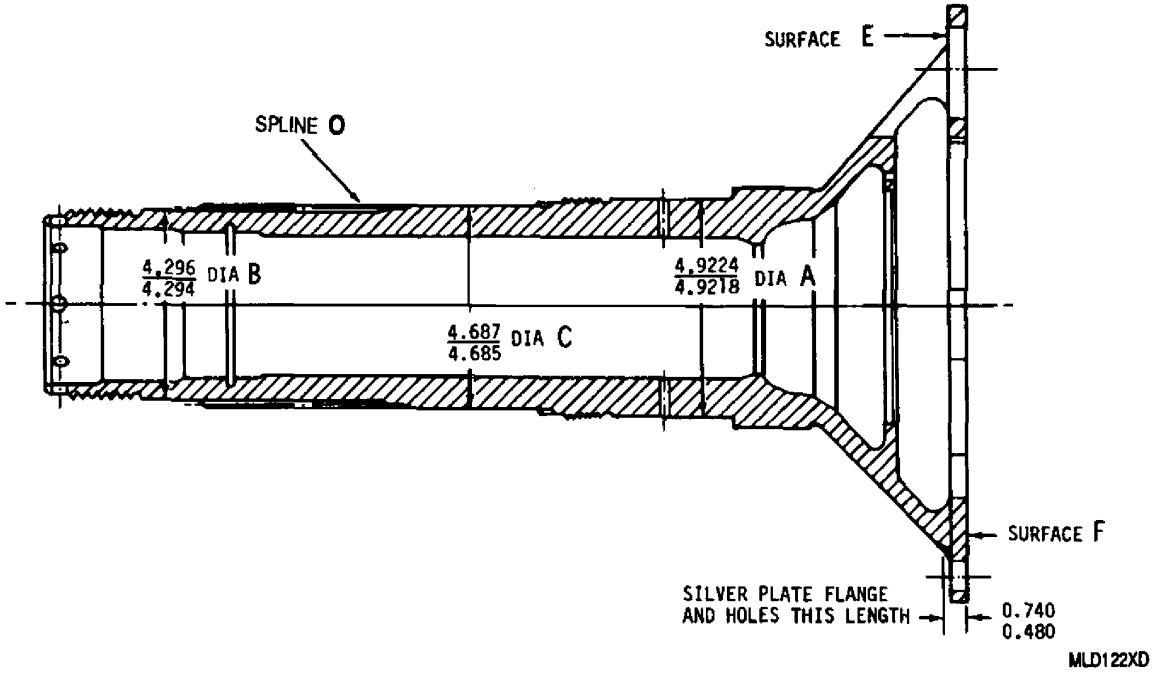

Figure 1. Propeller Shaft Bearing Journal Repair

(1) Max stock removal from each side shall not exceed 0.005 in.

(2) Min thickness of flange at hole spotfaces (Surface E) shall not be less than 0.417 in.

(3) Surface texture after grinding shall be 32 RMS or finer.

(4) Smooth and polish all sharp edges.

(5) Case hardness after grinding shall be 15N86 minimum.

d. Magnetic particle or fluorescent penetrant inspect flange per WP 017 00 for cracks and craze lines before plating. No cracks or craze lines are acceptable.

e. Establish shaft axis (true center) using Diameter A and B (figure 1). The following limits apply:

(1) Diameters A and B shall be concentric within 0.002 in. FIR.

(2) Surface F shall be square within 0.002 in. FIR with shaft axis.

(3) Surface E (hole spotfaces) shall be parallel to Surface F within 0.001 in. FIR.

f. Rinse shaft in clean running water for 30−60 seconds. Immerse in clean, hot water (160°F (71°C) minimum) for ten seconds minimum.

Compressed Air **56**

g. Dry shaft using clean compressed air.

h. Silver plate ground areas per WP 018 00 to distance 0.480 − 0.740 in. (figure 1). Plating thickness shall be 0.0001 − 0.0003 in.

i. If necessary, re−mark each planet hole number and its circumferential deviation measurement at original locations (figure 2). Use controlled shallow vibro peen method 2E1. Refer to AS 478.

9. PLANETARY GEAR BORE REPAIR.

a. Strip silver plate from flange per WP 018 00.

b. Grind planet gear bores k concentric with axis established by prop shaft diameters A and B or rear carrier diameter A, remove minimum material. Plating thickness after final grind must not exceed 0.005 in. and the parameters below:

(1) Continuously flood the work piece with filtered coolant.

(2) Use a freshly dressed wheel and a surface speed not more than 6500 surface feet per minute (SFPM).

(3) Do not exceed a feed rate of 0.0002 in. per pass.

c. Nital etch the ground surface per WP 016 00 and inspect for grinding burns. Reject any shafts that have been burned.

d. Within eight hours after nital etch, bake parts at 375 +/− 25 degrees Fahrenheit for four hours to relieve hydrogen embrittlement.

e. Magnetic particle inspect per WP 017 00 ground planet gear bores for cracks. Reject any shafts that have been cracked.

f. Chrome plate ground planet gear bores per WP 018 00. Deposit a plating thickness 0.003 − 0.004 in. greater than the intended final thickness.

g. Grind to finish dimension per applicable figure 1 or figure 2 while following the parameters below:

(1) Continuously flood the work piece with filtered coolant.

(2) Use a freshly dressed wheel and a surface speed no more than 6500 SFPM (surface feet per minute).

(3) Do not exceed a feed rate of 0.0002 in. per pass.

h. Reestablish hole deviation per applicable figure 1 or figure 2.

i. Stress relieve at 375 +/− 25 degrees Fahrenheit for four hours.

j. Magnetic particle inspection per WP 017 00 planet gear bore for cracks. Reject any shaft that is cracked.

k. Reapply silver plating to flange as required.

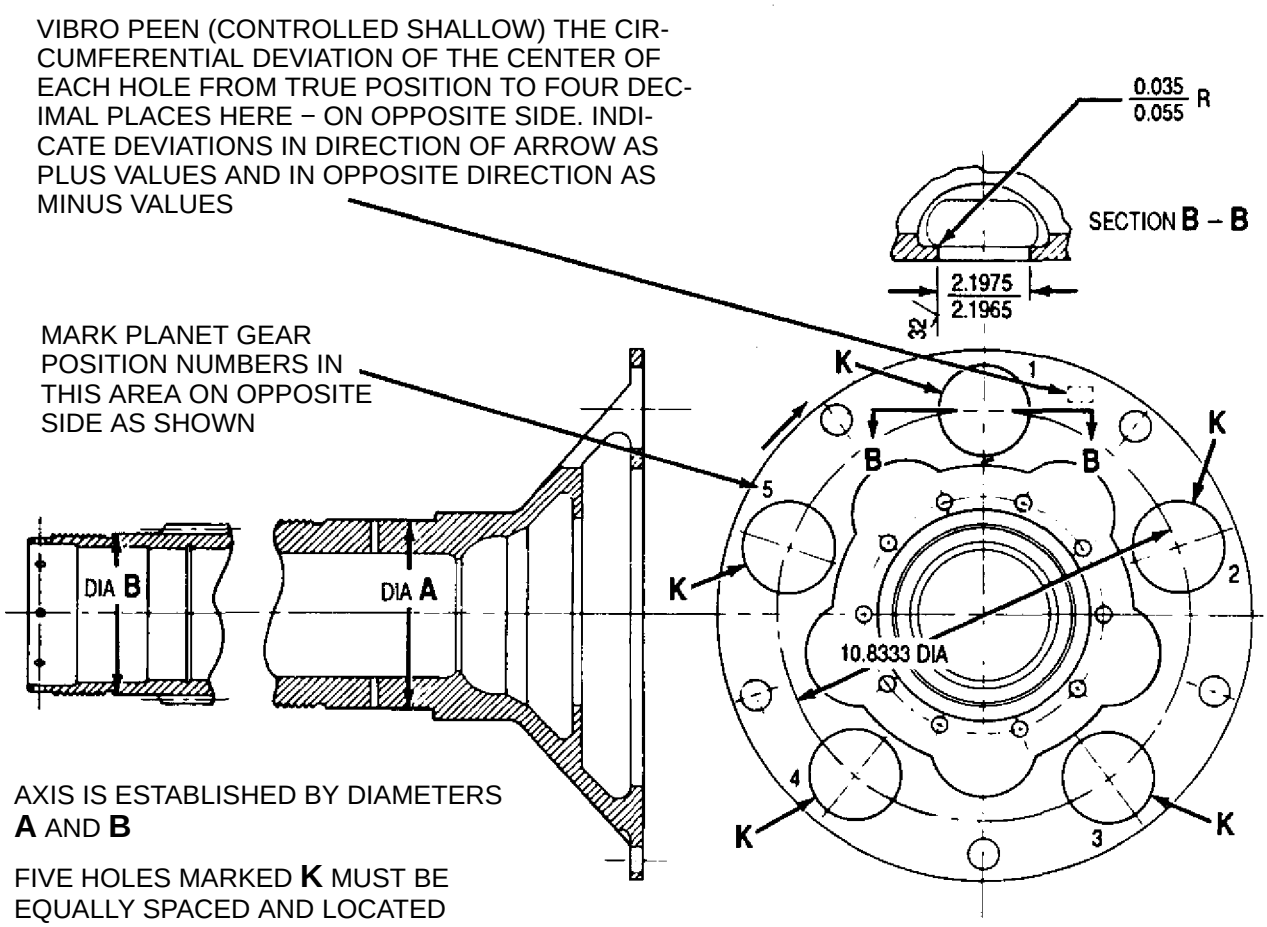

AXIS IS ESTABLISHED BY DIAMETERS **A** AND **B**

FIVE HOLES MARKED **K** MUST BE EQUALLY SPACED AND LOCATED WITHIN 0.001 INCH OF TRUE POSITION

TRUE HOLE POSITION IS DETERMINED RADIALLY FROM AXIS ESTABLISHED

BY DIAMETERS **A** AND **B** AND CIRCUMFERENTIALLY BY BORE MARKED NO. 1

NOTE:

SPACING CHECK IS REQUIRED WHEN:

1. MARKING IS NOT LEGIBLE
2. JOURNAL BORES HAVE BEEN ALTERED IN ANY WAY BY REPAIR
3. FEATURES ESTABLISHING PART AXIS HAVE BEEN REPAIRED

MLD156XA

Figure 2. Propeller Shaft Planet Gear Bores − Repair

DEPOT MAINTENANCE

INSPECTION AND REPAIR

REDUCTION GEAR REAR HOUSING AND (INNER) DIAPHRAGM ASSEMBLY

Reference Material

General Inspection, Repair and Replacement − Procedures . . . . . WP 009 00
Bearing Cages − General Inspection, Repair and Replacement . . . . . WP 011 00
Bearing Journal − Repair . . . . . WP 012 00
Studs − Replacement . . . . . WP 015 00
Magnetic Particle and Fluorescent Penetrant Inspection − Procedures . . . . . WP 017 00
Plating and Surface Treatment of Parts . . . . . WP 018 00
Reduction Gear Assembly − Assembly . . . . . WP 033 00
Reduction Gear Front and Rear Housing Assemblies
and Main Diaphragm Assembly − Painting . . . . . WP 040 00
Maintenance . . . . . NAVAIR 02B−5DG−6−1
Reduction Gear Rear Housing Oil Seals − Replacement . . . . . WP 033 00
Protective Treatments, Magnesium Alloys . . . . . AMS 2475

Alphabetical Index

Subject **Page No.**

Introduction 3
Reduction Gear Rear Housing and Inner Diaphragm Assembly 3
Bearing Bore Alignment Check 26
Inner Diaphragm Assembly 20
Boss Height − Inspection 26
Boss Height − Repair 26
Inspection 20
Mounting Pads − Repair 26
Repair 20

Alphabetical Index (contd)

Subject **Page No.**

Rear Housing Assembly 3
Alternator, Generator, and Hydraulic Pump Pad − Seal Bore Repair 14
Alternator and Hydraulic Pump Pad − Repair Using Service Repair Ring 15
Alternator Pad − Flange Repair 18
Inspection 3
Lockwire Lug (Propeller Brake Oil Port) − Damaged (Break−Out) Hole Repair 19
Pinion Rear Bearing Cage − Replacement 18
Repair 3
Side Mount Bore − Repair 20
Starter and Hydraulic Pump Pad − Flange Repair 14
Starter Pad and Bore − Corrosion Repair 10
Starter Pad Bore − Repair Using Service Repair Ring 10
Strut Eyebolt Boss and Hole − Repair 19
Tachometer Drive Bearing Cages, Oil Pump Drive Idler Journal, and Oil Pump Drive Bearing Cage Mounting Bosses − Fretting and Wear Repair 7
Tachometer Pad Bore − Repair 7
Torquemeter Housing Pilot Diameter − Repair 18
Rear Housing Oil Seals − Removal 3

Record of Applicable Technical Directives

None

1. **INTRODUCTION.**

2. This work package (WP) provides the instructions for inspection and repair of the reduction gear rear housing and (inner) diaphragm assembly. The assembly is a serialized matched set comprised of a rear housing assembly and diaphragm assembly. Do not intermix housings and diaphragms between sets.

3. **REDUCTION GEAR REAR HOUSING AND INNER DIAPHRAGM ASSEMBLY.**

4. REAR HOUSING OIL SEALS − REMOVAL. Remove oil seals from accessory drive bores. Refer to NAVAIR 02B−5DG−6−1, WP 033 00.

5. REAR HOUSING ASSEMBLY.

6. Rear Housing Assembly − Inspection.

a. Inspect rear housing assembly. Refer to table 1.

b. Refer to WP 017 00 for fluorescent penetrant inspection (FPI) procedures.

7. Rear Housing Assembly − Repair.

Materials Required

Specification No./Part No.	Nomenclature
A−A−1049, 280 − 320 grit	Cloth, emery
A50T7B	Material, Filler (GE)
MIL−PRF−3043	Resin coating
Sprabronze AA	Coating, metal
ZL−2	Oil, fluorescent penetrant
——	Pin, brass (AR)
——	Dichromate

a. Repair rear housing assembly. Refer to Disposition column, table 1.

b. Replace housing assemblies not within serviceable limits after repair.

Table 1. Reduction Gear Rear Housing Assembly − Inspection and Repair

Condition	Serviceable Limits	Repairable Limits	Disposition
Cracks (any location).	Not serviceable.	Not repairable.	Condemn housing exceeding serviceable limits.
FPI indications: In oil pump sump area or Inside rear housing.	Not serviceable.	3.00 in. max length, after blending to a max of 1/32 in. depth.	If indication is still apparent inside case after blending: a. Strip paint from outside of housing in affected area. b. Heat and FPI again, using ZL−2 fluorescent penetrant oil locally. c. Replace housing if indication extends through housing wall. d. Replace housing having line−type indication emanation from porosity, this indicates a fatigue − type condition.

Table 1. Reduction Gear Rear Housing Assembly − Inspection and Repair (contd)

Condition	Serviceable Limits	Repairable Limits	Disposition
Corrosion at bottom of starter pad well.	Not serviceable.	Any amount of corrosion.	Repair corroded areas. Refer to paragraph 10 or 12, this WP. **NOTE** Apply MIL−PRF−3043 resin coating, to all housings (WP 018 00), whether repair has been accomplished or not.
Damaged seal boss at alternator, hydraulic or starter pads.	0.002 in. max depth, if edges are not broken.	0.012 in. max depth.	Repair damage. Refer to paragraph 12, 13, 14 or 15, this WP.
Gouges, scratches, or other damage to tachometer seal retaining ring grooves and seal bores.	Less than 0.002 in. deep and damage does not extend over the edge.	Exceeds serviceable limits.	Repair tachometer seal bores. Refer to paragraph 9, this WP.
Fretting and wear on Surface C of mounting bosses for tachometer and oil pump drive bearing cages, and oil pump drive idler journal. (figure 3)	Not serviceable.	0.035 in. max depth.	Repair Surface C. Refer to paragraph 9, this WP.
Damaged housing−to−main−diaphragm mating surfaces.	Damage which does not: a. Break both edges(or inside edge to bolt hole). b. Exceed 75% of split−line width (or of distance from inside edge to bolt hole). c. Exceed 0.010 in. depth. d. Include roughness or metal build−up.	0.015 in. max depth.	Lap to remove metal build−up. Machine (phonograph) damaged surfaces; do not exceed 0.015 in. in depth. Metallize with Sprabronze AA and machine to print.
Mating Flange Warpage.	0.009 in. max warpage.	Exceeds serviceable limits.	Machine flange with skim cut. Flange thickness after machining shall meet minimum print limits. If unable to repair with skim cut, machine flange no more than .015 in. below print limits. Metallize with Sprabronze AA (WP 018 00) and machine to print limits. Spray thickness after machining, shall be within 0.006−0.015 in.

Table 1. Reduction Gear Rear Housing Assembly − Inspection and Repair (contd)

Condition	Serviceable Limits	Repairable Limits	Disposition
Strut eye−bolt boss:			
Damaged spot faces of bolt holes.	Not serviceable.	Minimum axial thickness of boss is 5.4230 in.	Remove damage with a minimum amount of machining. Spot faces must be square with hole within 0.002 in.
Eye−bolt hole wear.	Maximum hole diameter of 1.1265 in.	Exceeds serviceable limits.	Repair housing. Refer to paragraph 18, this WP.
Sharp corners or improper radius on surfaces adjacent to strut eye−bolt hole spot faces.	Not serviceable.	Any sharp corner.	Blend sharp corners to 3132 in. radius. Smooth up reworked areas using A−A−1049, 280 − 320 grit emery cloth. Touch up paint per WP 040 00.
Side Mount Bore: (3.000−3.002 in. Dia.) (figure 15)			
Corrosion−			
Bore (Side)	Not serviceable.	Light−Scattered. (No appreciable depth)	Remove with wire brush and treat with Dichromate AMS 2475.
		Heavy−Concentrated. (measurable depth)	Rework to install steel insert. Refer to paragraph 20, this WP.
Bore (Bottom)	Not serviceable.	Scattered pits not exceeding 0.015 in. in depth.	Remove with wire brush and treat with Dichromate AMS 2475.
		Concentrated areas providing pits do not exceed 0.030 in. in depth.	Apply GE A50T7B or equivalent filler to corroded areas. After hardening dress down to smooth surface.
Gouging, scratch or other damage on side of bore.	Less than 0.002 in. in depth. Blend to remove sharp edges and metal buildup.	Exceeds serviceable limits.	Rework to install steel insert. Refer to paragraph 20, this WP.
Wear.	The average of four diameters does not exceed 3.003 in. and none of the four diameters exceed 3.004 in.	Exceeds serviceable limits.	Rework to install steel insert. Refer to paragraph 20, this WP.

Table 1. Reduction Gear Rear Housing Assembly − Inspection and Repair (contd)

Condition	Serviceable Limits	Repairable Limits	Disposition
Damaged starter shaft bearing flange (propeller brake) bore.	Refer to Table of Limits, WP 033 00.	Exceeds serviceable limits.	Metal spray repair. Refer to WP 012 00.
Damaged flanged bushing.	Not serviceable.	Not repairable.	Replace bushing: a. Flanged bushing shall be tight against housing before installing lockpin. b. New lockpin must be at least 3/16 in. from old pin hole. c. Drill lockpin hole 0.1225 − 0.1245 in. dia by 0.281 in. deep from flange face. d. Select pin for press fit. Pin to be 0.010 − 0.030 in. below surface. e. Stake metal over lockpin slightly.
Loose bearing cage.	Not serviceable.	Any looseness.	Replace cage. Refer to WP 011 00. Replace pinion bearing cage per paragraph 16, this WP. Damaged cage bore can be repaired per WP 011 00.
Pinion rear bearing cage:			
ID out−of−round.	(Based on 4 measure−ments approx 45° apart.) Acceptable ID range is 4.2942 − 4.2957 in.	Exceeds serviceable limits.	Replace cage. Refer to paragraph 16, this WP. Damaged cage bore can be repaired per WP 011 00.
Worn ID.	Not serviceable.	Exceeds serviceable limits.	Replace cage. Refer to paragraph 16, this WP. Damaged cage bore can be repaired per WP 011 00.
Paint damage.	Not serviceable.	Any damage.	Touch−up or respray. Refer to WP 040 00.

8. Tachometer Pad Bore − Repair. (figures 1 and 2) This procedure applies to both tachometer pads.

Materials Required

Specification No./Part No.	Nomenclature
MIL−PRF−3043	Resin coating
——	Aluminum or Magnesium
——	Pin, brass

a. Fabricate a repair sleeve of either aluminum or magnesium as shown (figure 1).

b. Locate tachometer seal bore as shown (figure 2). Machine Dia B (figure 1) to provide a 0.002 − 0.003 in. tight fit with repair sleeve.

c. Press repair sleeve into machined bore.

d. Pin sleeve with a 0.125 x 0.500 in. brass pin. Drill pin holes as shown and select pin for tight fit.

e. Locate tachometer seal bore (figure 2) and finish machine sleeve to dimensions shown (figure 1). Machine sleeve flush to 0.001 in. below mounting pad surface.

Resin Coating Thinner MIL−PRF−3043 40

f. Apply MIL−PRF−3043 resin coating to ID of seal bores (WP 018 00).

9. Tachometer Drive Bearing−C, Cages, Oil Plum Drive Idler Journal. and Oil Pump Drive Bearing Cage Mounting Bosses−Fretting and Wear Repair. (figure 3) Repair both mounting bosses at the same time using metallizing procedures as follows:

Materials Required

Specification No./Part No.	Nomenclature
A−A−857	Thinner, lacquer
O−M−232	Methynol (methyl alcohol)
MIL−PRF−3043	Resin coating
MIL−PRF−680, Type II	Solvent, dry cleaning
Metcolite C	Grit, aluminum oxide (20−50 mesh size)
Sprabond	Material, bonding
Sprabronze AA	Material, metallizing

Methyl Alcohol O−M−232 58

NOTE

The plain screw bushings are installed 0.010−0.030 in. below Surface C. The bushings are removed whenever they will interfere with cleanup machining.

a. Remove screw bushings if required to cleanup fretting and wear on Surface C (figure 3).

b. Machine Surface C removing the minimum amount of material required to clean up damage. Do not exceed 6.207 in. from Surface A.

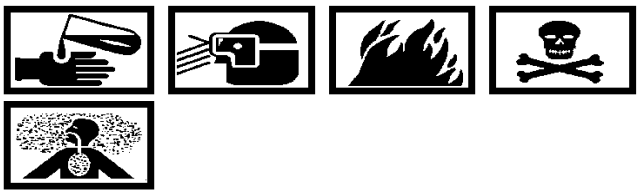

Dry Cleaning Solvent MIL−PRF−680, Type II 3

Methyl Alcohol O−M−232 58

c. After machining, thoroughly clean the surface by washing with MIL−PRF−680, Type II solvent. Thoroughly brush surface to be metallized with A−A−857 lacquer thinner or O−M−232 methynol (methyl alcohol).

d. Mask area not to be coated. Masks may be made from steel, brass, silastic or other materials properly protected against adherence of the spray coating in order to prevent damage to coating during removal of masks.

e. Grit blast area to be metallized as follows:

(1) Impinge a stream of 20−50 mesh size aluminum oxide grit, Metcolite C at 50−100 psig air pressure against the surface to produce the desired finish.

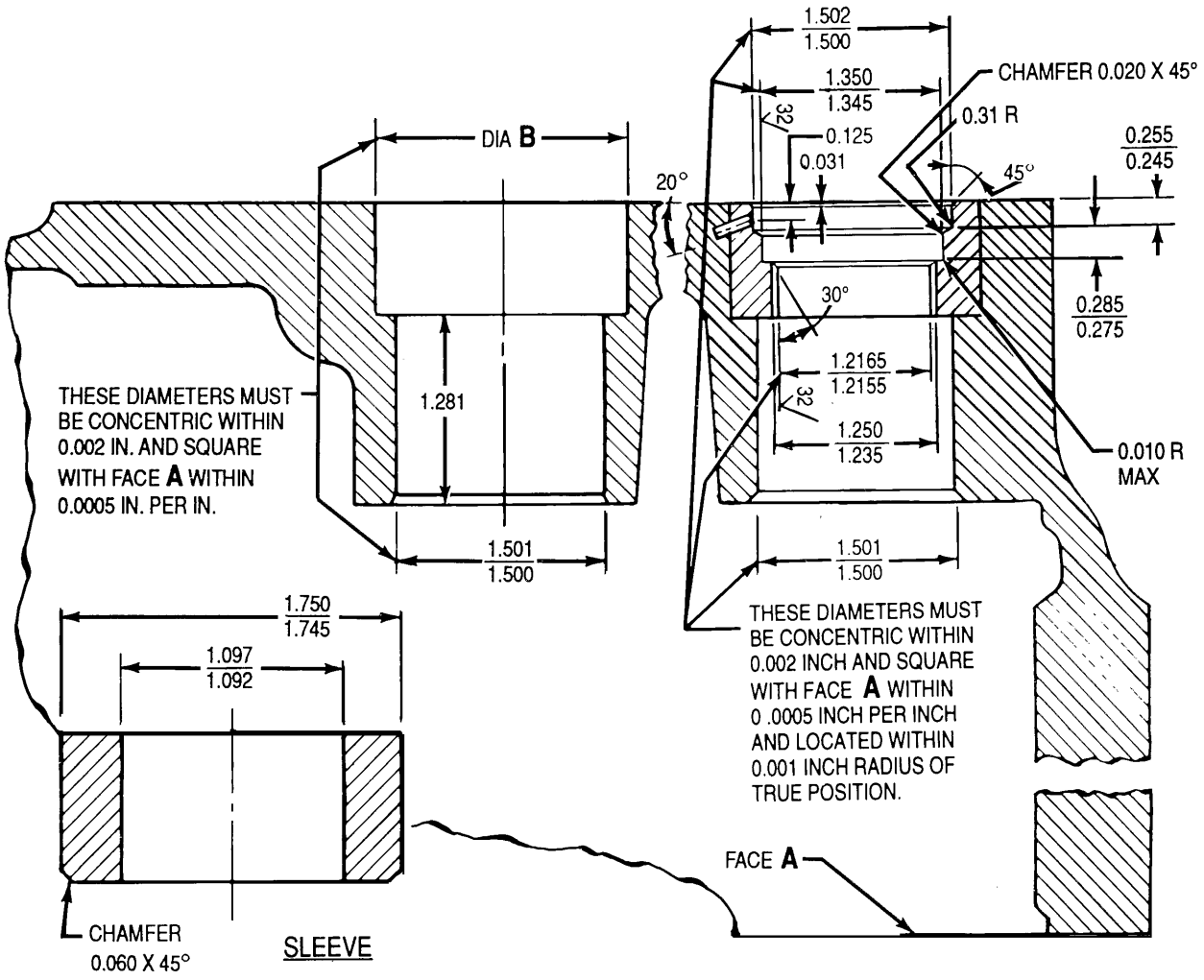

Figure 1. Tachometer Mounting Pad Bore Repair

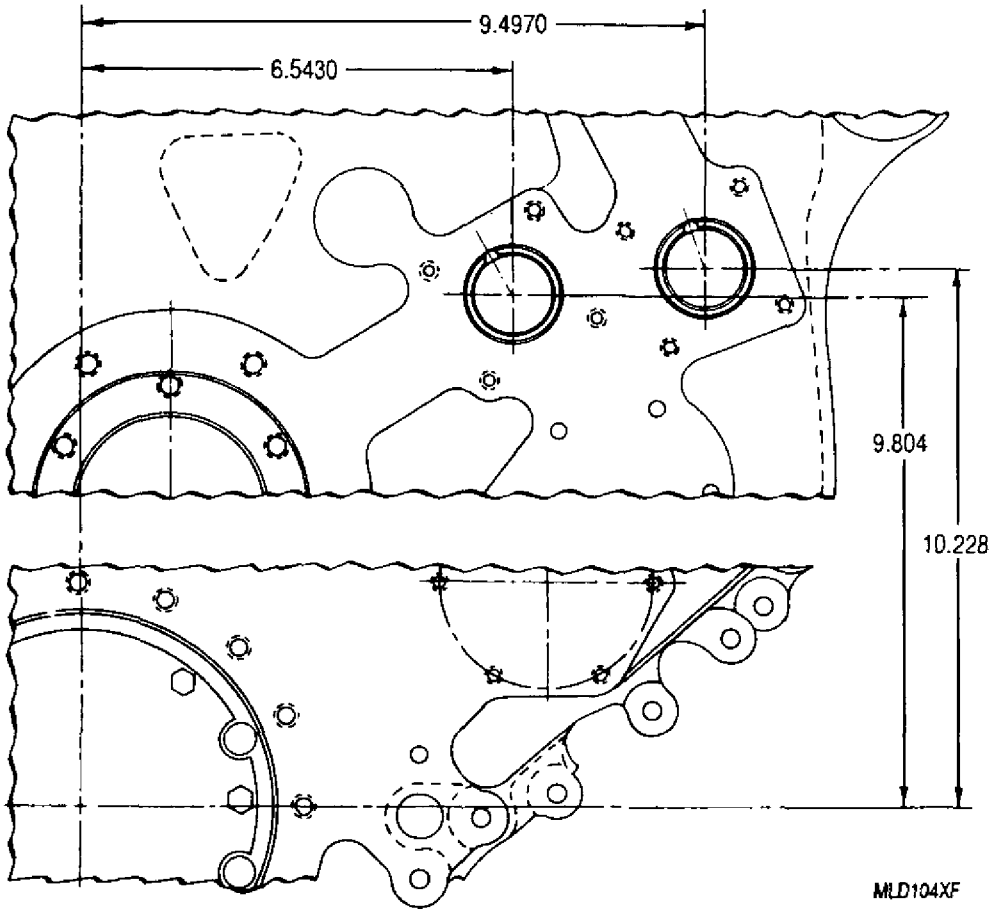

Figure 2. Tachometer Mounting Pad Bore Locating Dimensions

WARNING

Heated parts will cause skin damage (burns). Use clean insulated gloves to handle parts.

Compressed Air **57**

(2) Remove all loose particles from grit−blasted surfaces with clean, dry compressed air.

(3) New grit shall be used for each cleaning unless the grit blast machine has a filter to remove small particles of foreign material. When the filter is used, add new grit only as required.

f. Care should be taken to prevent any contamination of the prepared surface in order to obtain satisfactory bond. The time between grit blasting and application of spray coating shall not exceed two hours.

g. Preheat the cleaned and masked part to 175° − 200°F (79° − 93°C).

h. Place the piece in a fixture or rotary table designed to obtain a uniform coverage of the area to be coated. Proper ventilation is necessary to remove overspray and non−adherent particles in order to prevent contamination of other surfaces.

i. Apply a bonding material (Sprabond) to a thickness of 0.001 − 0.002 in. The wire shall be applied with a gun having automatic gas pressure and wire feed control. As soon as metallizing is started, use an air

blast on the opposite side of the part. The air blast shall be controlled to maintain a part temperature of 175° − 200°F (79° − 93°C). This temperature range is critical as parts deviating from this temperature are apt to result in inferior bond.

j. Apply finish metallizing coat of Sprabronze AA to thickness required for finishing. Remove masks in such a manner so as not to damage the coating.

k. Finish machine Surface C to dimension and surface texture shown. Maintain parallelism requirement with Surface B within 0.0005 in. per in.

l. Thickness of sprayed coating shall not exceed 0.035 in. after final machining.

m. Break edges 0.003 − 0.010 in.

n. The sprayed coating shall be adherent to base material and shall have a uniform surface free of blisters, chips, or other objectionable defects not readily removable by the finishing operation.

o. Restore chamfers as shown.

p. If removed, install new plain screw bushings 0.010 − 0.030 in. below Surface C.

Resin Coating Thinner MIL−PRF−3043 40

q. After inspection and repair of mounting bosses, apply MIL−PRF−3043 to Surface C. (WP 018 00).

10. Starter Pad and Bore − Corrosion Repair. (figures 4 and 5)

Materials Required

Specification No./Part No.	Nomenclature
MIL−PRF−3043	Resin coating

a. Corrosion of surfaces A and B (figure 4) shall be removed by cutting or milling out pitted area.

(1) Do not exceed material removal limits in figure 5.

(2) After burrs and sharp edges are blended, the reworked area shall not exceed 20% of circumferential area.

(3) Corrosion in vicinity of screw bushings shall be removed within limits of figure 4.

(4) Brush dichromate reworked area around bushings. Refer to AMS 2475.

b. When corrosion is present in Surface C (figure 4) repair seal bore as follows:

(1) Remove corrosion by machining the ID. (Do not exceed 0.030 in. material removal.) Remaining localized damage is acceptable if it does not exceed 0.002 in. in depth.

(2) Metallize the seal bore per paragraph 13, steps b through i, this WP.

(3) Machine seal bore to dimensions shown (figure 5). The thickness of sprayed coating shall not exceed 0.030 in. after final machining.

(4) The sprayed coating shall be adherent to base material and have a uniform surface free of blisters, chips or other objectionable defects not readily removable by finishing operations.

Resin Coating Thinner MIL−PRF−3043 40

c. After inspection and repair of starter mounting pad apply MIL−PRF−3043 resin coating to repaired area (WP 018 00).

11. Starter Pad Bore − Repair Using Service Repair Ring. (figure 5)

Materials Required

Specification No./Part No.	Nomenclature
MIL−PRF−3043	Resin coating
23032867	Ring, repair

a. Machine pad bore to dimension shown in figure 5. Dia A shall provide a 0.0015 − 0.0020 in. tight fit with service repair ring.

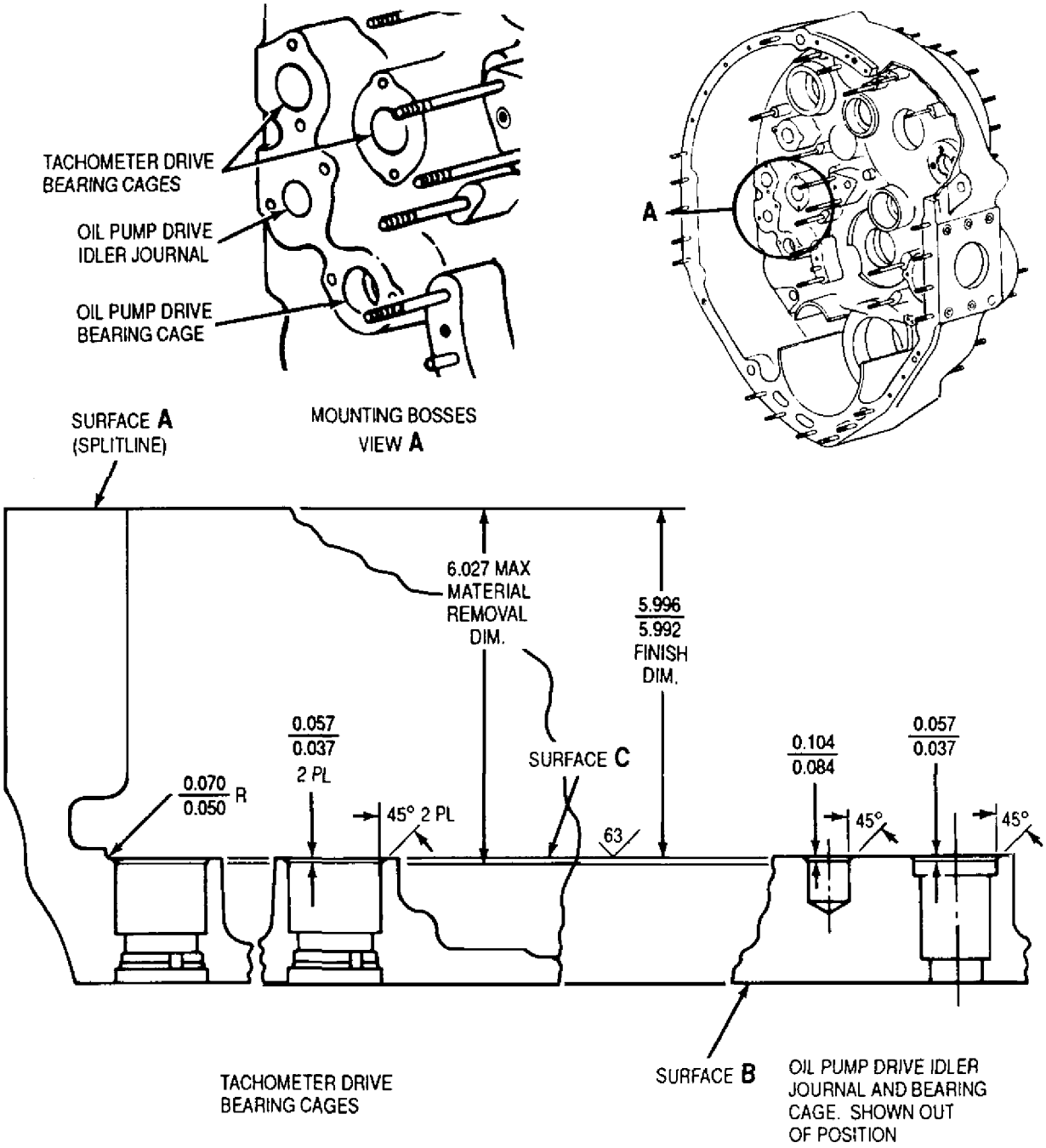

AFTER FINISH MACHINING SURFACE **C**
SHALL BE PARALLEL WITH SURFACE **B**
WITHIN 0.0005 INCH PER INCH

MLD158XA

Figure 3. Tachometer Drive Bearing Cages, Oil Pump Drive Idler Journal, and Oil Pump Bearing Cage Mounting Bosses − Fretting and Wear Repair

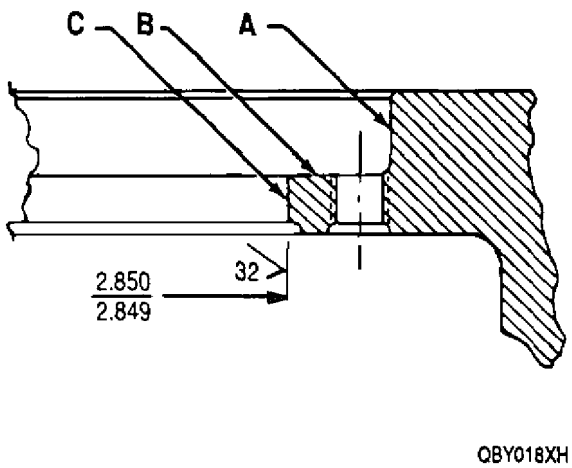

MAXIMUM MATERIAL REMOVAL LIMITS

Surface	Depth (in.)
A	0.250
B	0.060
C	0.030

Figure 4. Starter Mounting Pad Repair Limits

WARNING

Heated parts will cause skin damage (burns). Use clean insulated gloves to handle parts.

Resin Coating Thinner MIL−PRF−3043 40

b. Apply MIL−PRF−3043 resin coating to ring OD and face (WP 018 00). Heat rear housing to 150°F (66°C) and install ring, then cure.

c. Machine ring ID to 2.849 − 2.850 in. (figure 5).

d. Add sealer to both ends of ring (WP 018 00).

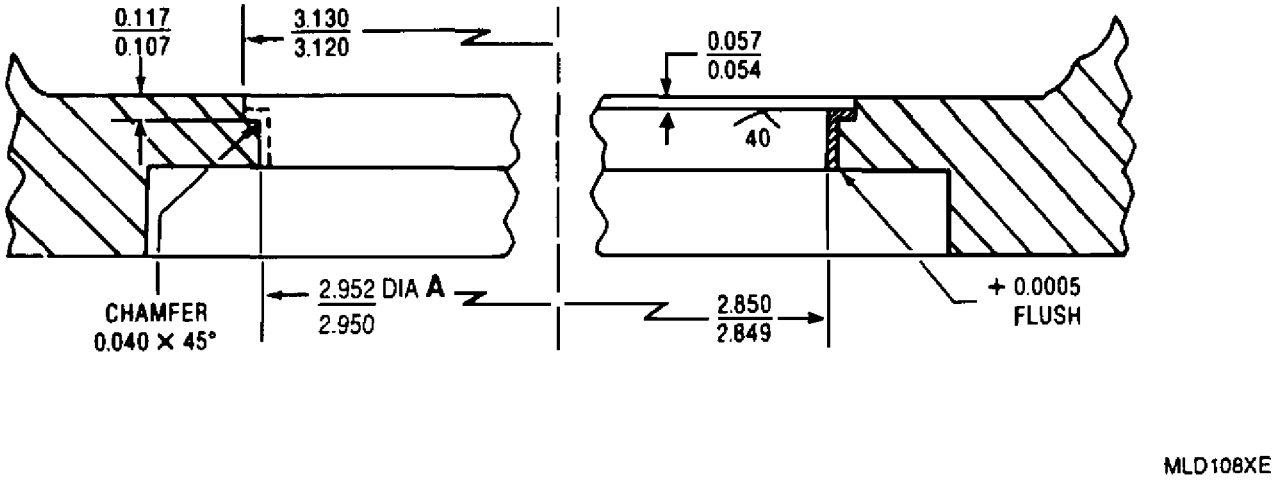

Figure 5. Machining Starter Pad and Fitting Service Repair Ring

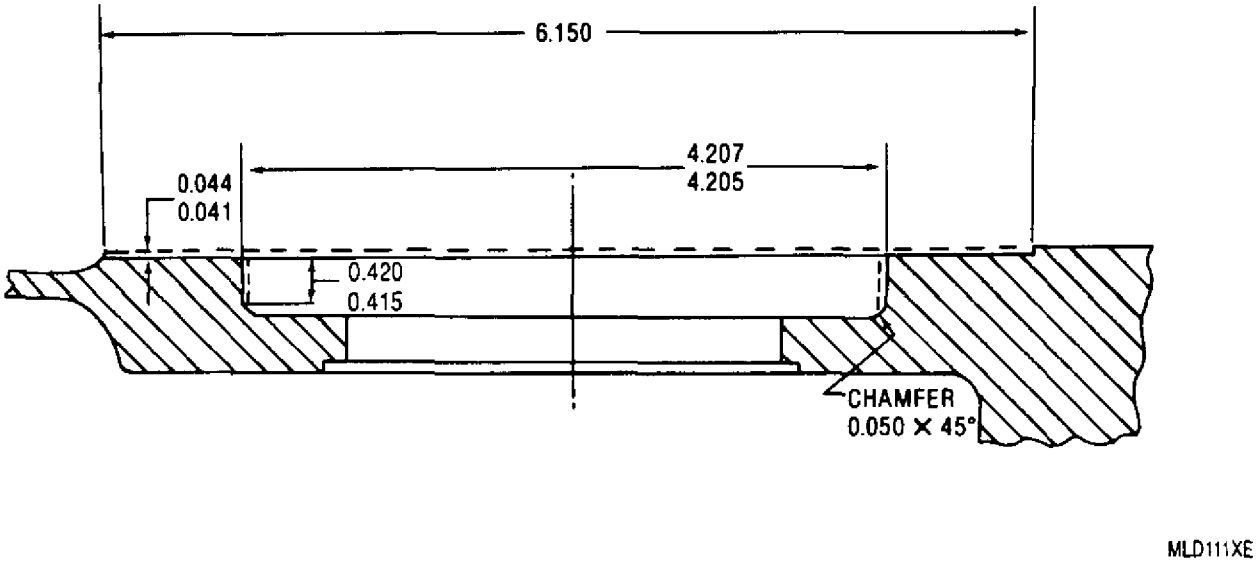

Figure 6. Starter Pad Machining Dimensions

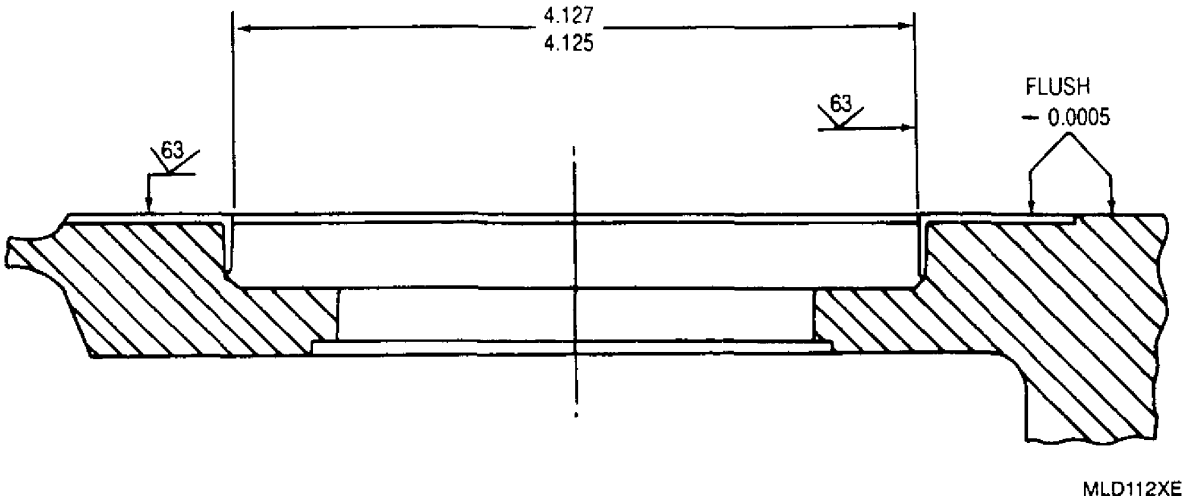

Figure 7. Hydraulic Pump Pad Machining Dimensions

12. Starter and Hydraulic Pump Pad − Flange Repair. (figures 6 and 7)

Materials Required

Specification No./Part No.	Nomenclature
MIL−PRF−3043	Resin coating
23032866	Flange, repair

a. Remove studs.

b. Machine pad ID and face of housing to dimensions in figure 6. Pad ID shall provide a 0.0005 − 0.0015 in. tight fit with service repair flange.

c. Brush dichromate on housing where machined. Refer to AMS 2475.

WARNING

Heated parts will cause skin damage (burns). Use clean insulated gloves to handle parts.

Resin Coating Thinner MIL−PRF−3043 40

d. Apply MIL−PRF−3043 resin coating to mating surfaces of both housing and repair flange (WP 018 00). Preheat housing to 150°F (66°C) and install repair flange. Ensure stud holes are aligned. Cure resin (WP 018 00).

e. Machine repair flange to dimensions shown (figure 7).

f. Seal all edges between repair flange and housing with resin (WP 018 00).

g. Reinstall studs or oversize studs if required to meet drive torque limits (WP 015 00).

13. Alternator, Generator. and Hydraulic Pump Pad − Seal Bore Repair. (figures 8 and 9) Repair damaged seal bores on the alternator, generator, or hydraulic pump pads by metallizing procedures as follows:

Materials Required

Specification No./Part No.	Nomenclature
A−A−857	Thinner, lacquer
MIL−PRF−3043	Resin coating
O−M−232	Methynol (methyl alcohol)
MIL−PRF−680,Type II	Solvent, dry cleaning
Metcolite C	Grit, aluminum oxide (20 − 50 mesh size)
Sprabond	Material, bonding
Sprabronze AA	Material, metallizing

a. Machine inside diameter to remove damage. The maximum amount of material removed shall not exceed 0.035 in. Remaining localized damage is acceptable if it does not exceed 0.002 in. in depth.

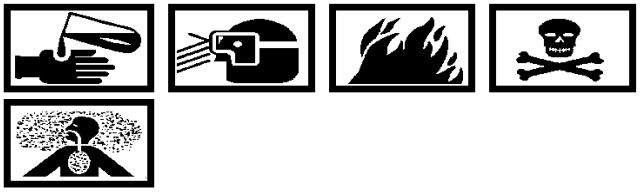

Dry Cleaning Solvent MIL−PRF−680, Type II 3

Methyl Alcohol O−M−232 58

b. After machining, thoroughly clean the surface by washing with MIL−PRF−680, Type II dry cleaning solvent. Thoroughly brush surface to be metallized with A−A−857 lacquer thinner or O−M−232 methynol (methyl alcohol).

c. Mask area not to be coated. Masks may be made from steel, brass, silastic or other materials properly protected against adherence of the spray coating in order to prevent damage to coating during removal of masks.

d. Grit blast area to be metallized as follows:

(1) Impinge a stream of 20 − 50 mesh size aluminum oxide grit, Metcolite C at 50 − 100 psig air pressure against the surface to produce the desired finish.

Compressed Air 57

(2) Remove all loose particles from grit−blasted surfaces with clean, dry compressed air.

(3) New grit shall be used for each cleaning unless the grit blast machine has a filter to remove small particles of foreign material. When the filter is used, add new grit only as required.

e. Care should be taken to prevent any contamination of the prepared surface in order to obtain satisfactory bond. The time between grit blasting and application of spray coating shall not exceed two hours.

WARNING

Heated parts will cause skin damage (burns). Use clean insulated gloves to handle parts.

f. Preheat the cleaned and masked part to 175 − 200°F (79 − 93°C).

g. Place the piece in a fixture or rotary table designed to obtain a uniform coverage of the area to be coated. Proper ventilation is necessary to remove overspray and non−adherent particles in order to prevent contamination of other surfaces.

h. Apply a bonding material (Sprabond) to a thickness of 0.001 − 0.002 in. The wire shall be applied with a gun having automatic gas pressure and wire feed control. As soon as metallizing is started, use an air blast on the opposite side of the part. The air blast shall be controlled to maintain a part temperature of 175 − 200°F (79 − 93°C). This temperature range is critical as parts deviating from this temperature are apt to result in inferior bond.

i. Apply finish metallizing coat of Sprabronze AA to thickness required for finishing. Remove masks in such a manner so as not to damage the coating.

j. Machine seal bore to limits in figure 8 or 9.

k. The seal bore diameter shall be concentric with bearing cage bore within 0.002 in. FIR and square with housing forward flange within 0.0005 in. per in.

l. The thickness of sprayed coating shall not exceed 0.035 in. after final machining.

NOTE

Be sure the sprayed coating is finished flush with the adjacent case on both inside and outside.

m. The sprayed coating shall be adherent to base material and shall have a uniform surface free of blisters, chips, or other objectionable defects not readily removable by the finishing operation.

Resin Coating Thinner MIL−PRF−3043 40

n. After inspection and rework of mounting pads, apply MIL−PRF−3043 resin coating (WP 018 00).

14. Alternator and Hydraulic Pump Pad Bore − Repair Using Service Repair Ring. (figures 8 through 11)

Materials Required

Specification No./Part No.	Nomenclature
MIL−PRF−3043	Resin coating
MS9486−55	Pin (3)
23032872	Ring, repair

a. Machine pad ID to dimension shown in figure 10 or 11. Pad ID shall provide a 0.0015 − 0.0020 in. tight fit with service repair ring.

WARNING

Heated parts will cause skin damage (burns). Use clean insulated gloves to handle parts.

Resin Coating Thinner MIL−PRF−3043 40

b. Apply MIL−PRF−3043 resin coating to repair ring OD and face. (WP 018 00). Preheat housing to 150°F (66°C) and install ring. Cure resin.

c. Drill 0.1225 − 0.1245 in. diameter by 0.650 in. deep pin holes in three places. Select pin for drive fit. Insert pin 0.010 − 0.020 in. below ring surface.

d. Machine sleeve ID face and slot as shown in figure 8 or 9. The seal bore diameter must be concentric with the bearing cage bore within 0.002 in. FIR and square with the housing forward flange within 0.0005 in. per in.

e. Apply resin sealer (WP 018 00) to both ends of ring where it contacts housing.

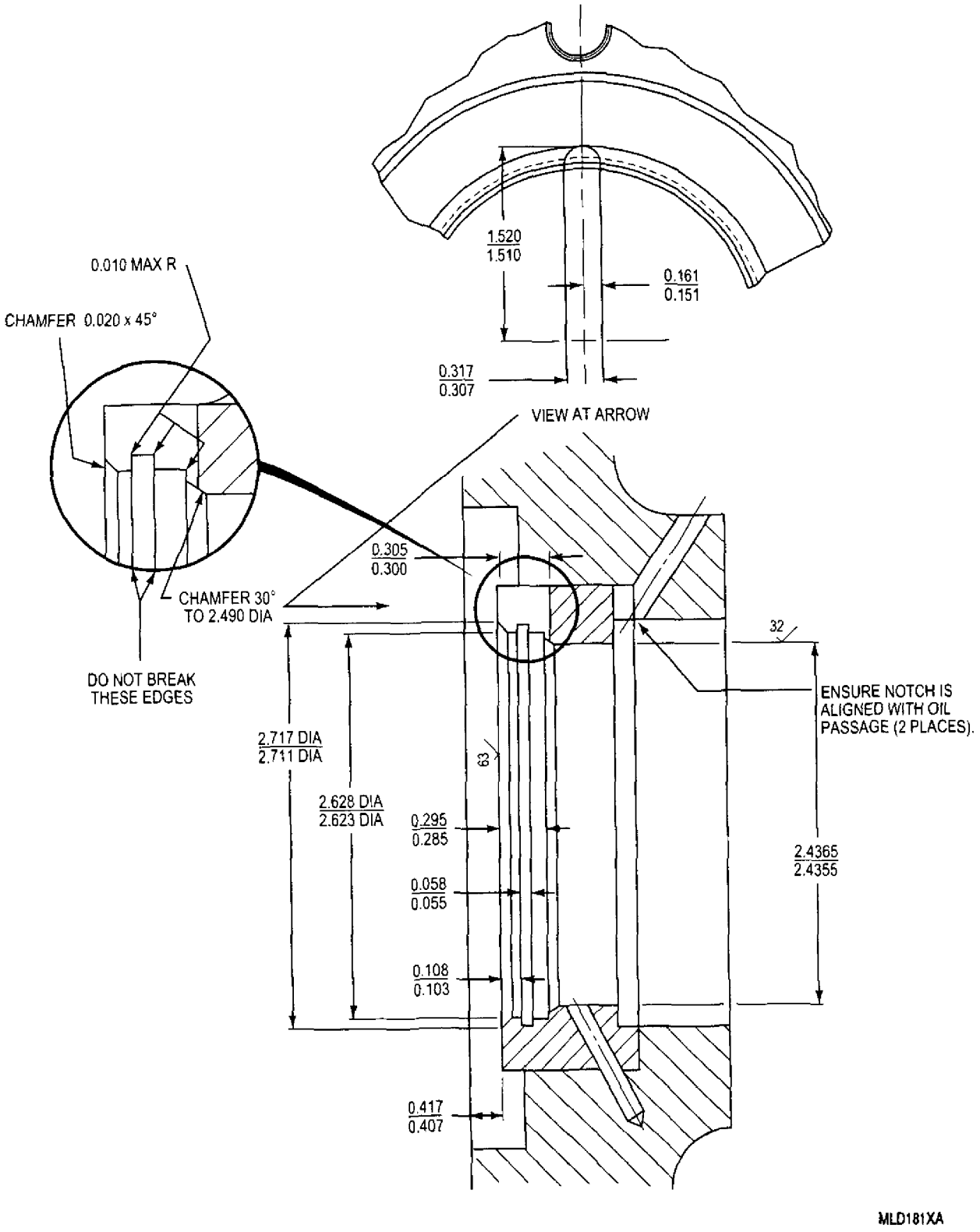

Figure 8. Hydraulic Pump Mounting Pad Seal Bore Machining Limits

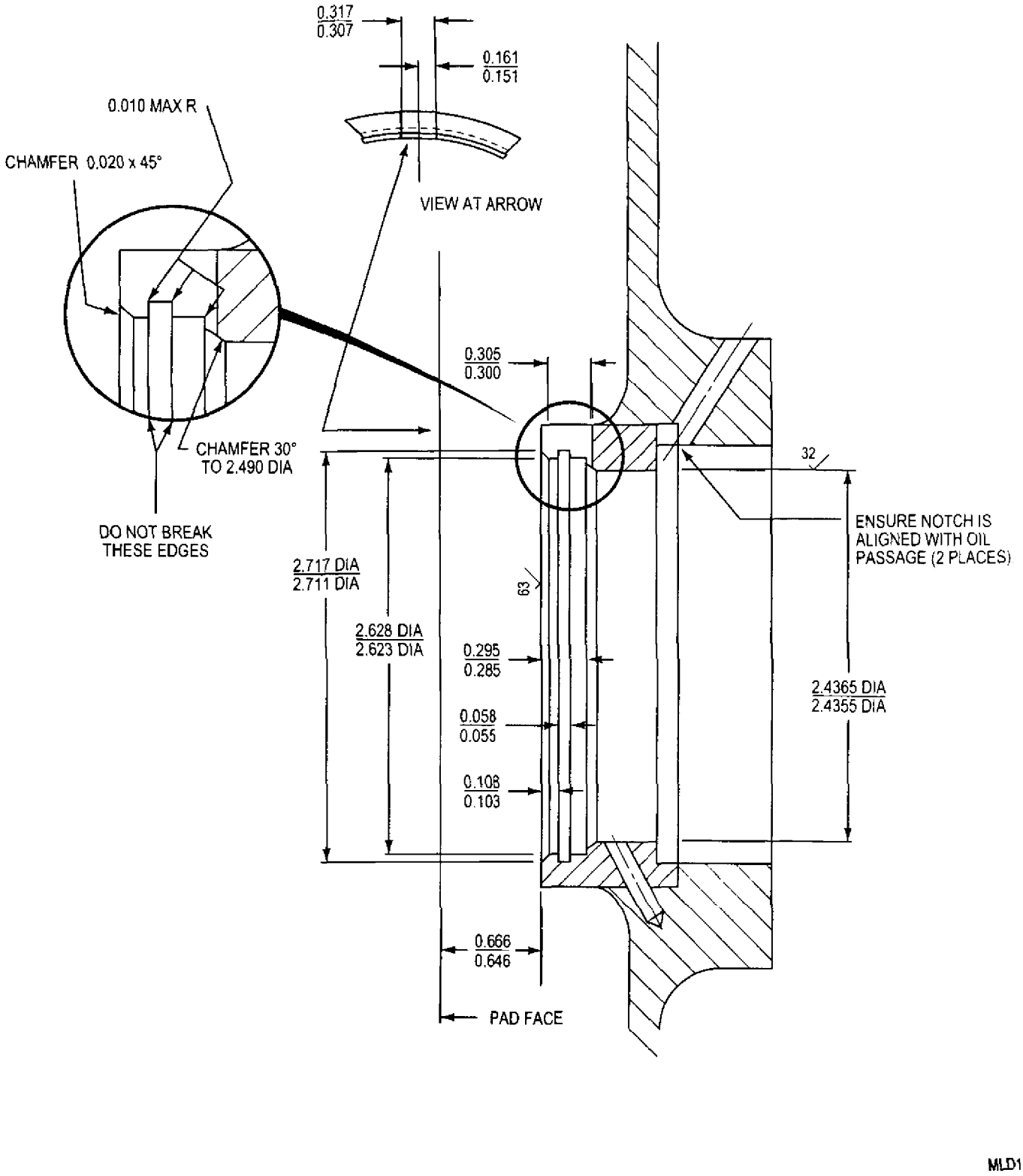

Figure 9. Alternator Mounting Pad Seal Bore Machining Limits

15. Alternator Pad − Flange Repair. (figure 12)

Materials Required

Specification No./Part No.	Nomenclature
MIL−PRF−3043	Resin coating
23032896	Flange, repair

a. Remove studs.

b. Machine pad ID and face of housing to dimensions in figure 12. Pad ID shall provide a 0.0005 − 0.0015 in. tight fit with service repair flange.

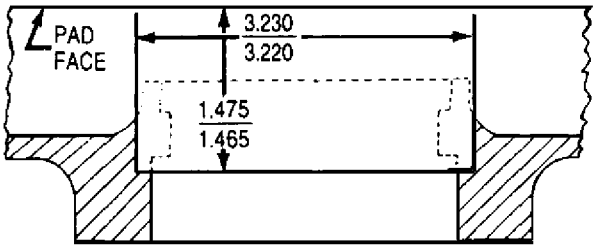

Figure 10. Alternator Seal Bore Machining Dimensions

c. Brush dichromate housing where machined. Refer to AMS 2475.

WARNING

Heated parts will cause skin damage (burns). Use clean insulated gloves to handle parts.

Resin Coating Thinner MIL−PRF−3043 40

d. Apply MIL−PRF−3043 resin coating to mating surfaces of both housing and repair flange (WP 018 00). Preheat housing to 150°F (66°C) and install repair flange. Ensure stud holes are aligned. Cure resin.

e. Machine repair flange to dimensions in figure 12.

f. Seal all edges between repair flange and housing with resin (WP 018 00).

g. Reinstall studs or oversize studs if required to meet torque limits (WP 015 00).

16. Pinion Rear Bearing Cage − Replacement.

a. Remove bearing cage from rear housing.

b. Refer to WP 033 00 for cage−housing fit.

WARNING

Heated parts will cause skin damage (burns). Use clean insulated gloves to handle parts.

c. Heat the rear housing, 250−300°F (120−150°C), and install cage. Align the five slots in cage flange with vent holes in housing.

d. The bearing cage ID shall be within 4.2942 − 4.2957 in. after assembly has cooled to room temperature.

e. Position a bearing locking key in key slot of the cage.

f. Torque nuts securing bearing cage to housing to 74−89 lb in. (QA)

17. Torquemeter Housing Pilot Diameter Repair. (figure 13)

Materials Required

Specification No./Part No.	Nomenclature
——	Sleeve, replacement (locally manufacture, AMS 5647)
——	Dichromate

NOTE

Metal spray repair of rear pinion pilot diameter is not allowed.

a. Remove 16 studs and threaded insert.

CAUTION

Front housing, main diaphragm, inner diaphragm, and rear housing are bore aligned as a set. Do not intermix other parts once bore alignment has been accomplished.

b. Use main diaphragm front pinion bearing cage bore to rear housing rear pinion bearing cage bore alignment to locate bore center. Main diaphragm front pinion bearing cage bore is reference.

c. Skim cut to remove minimum amount of metal required to touch entire radius.

d. Measure diameter of bore. Determine smallest replacement sleeve required to repair bore.

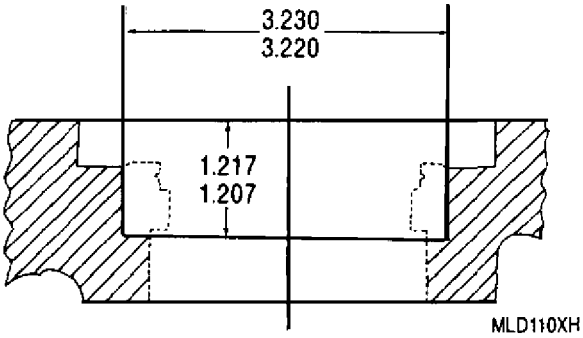

Figure 11. Hydraulic Seal Bore Machining Dimensions

e. Machine bore to required size. Bore must have a 0.0015−0.0020 in. tight fit with repair sleeve. Brush dichromate per AMS 2475 where machined.

CAUTION

Heated parts will cause skin damage (burns). Use clean insulated gloves to handle parts.

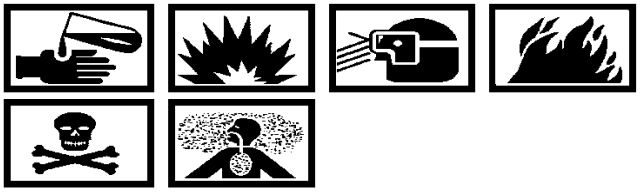

Actithane Paint WC 100 **11**

f. Coat the sleeve and rear housing mating surface with ACTI−THANE WC−100 per WP 018 00. Heat the rear housing to 300°F (149°C) and install sleeve. Clamp and allow to dry for one hour minimum prior to curing. Ensure stud holes are aligned.

g. Machine the ring ID to 5.8740−5.876 in. diameter. Use main diaphragm front pinion bearing bore as reference for bore center.

h. Apply ACTI−THANE WC−100 to both ends of ring and sleeve per WP 018 00. Allow to dry for one hour minimum prior to curing.

i. Reinstall studs or oversize studs if required to meet torque limits (WP 015 00). Reinstall threaded insert.

18. Strut Eyebolt Boss and Hole − Repair. (figure 14)

Materials Required

Specification No./Part No.	Nomenclature
AN150330	Pin, brass (AR)
MIL−PRF−3043	Resin coating
6858613	Insert, repair, front eyebolt boss (AR)
6858614	Insert, repair, rear eyebolt boss (AR)

a. Drill and ream eyebolt hole 1.2450−1.2460 in. diameter (figure 14).

Resin Coating Thinner MIL−PRF−3043 **40**

b. Touch up machined areas with MIL−PRF−3043 resin coating per WP 018 00.

NOTE

The longer insert shall be installed at the rear face.

c. Install service replacement inserts as shown and check ID dimension of each insert.

d. Drill pin holes 0.0913−0.0933 in. diameter and 0.219 in. deep at locations shown.

e. Select pins for a press fit and peen flush.

f. Break all sharp edges 0.010 in. maximum.

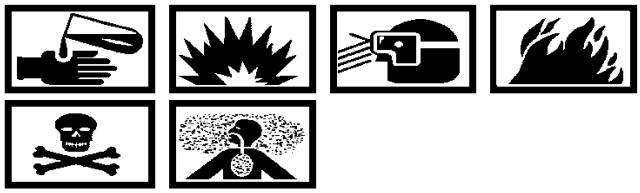

Actithane Paint WC 100 **11**

g. Seal inserts front and rear faces at mating surfaces with ACTI−THANE WC−100 paint or equivalent per WP 018 00 to prevent corrosion.

h. Check all dimensions (figure 14) and machine as necessary.

19. Lockwire Lug (Propeller Brake Oil Port) − Damaged Break−Out) Hole Repair. (figure 15)

a. Locate new hole adjacent to original hole, but in no case shall wall thickness around new hole be less than 0.060 in.

CAUTION

When using double angle drilling method be careful not to penetrate housing wall.

b. Drill 0.060−0.080 in. hole as shown (figure 15). Hole may vary in location, direction, and angle. Double angle drilling method may be used when necessary because of stock limitations, do not penetrate housing wall.

c. Deburr hole.

d. Touchup paint in repaired area. Refer to WP 040 00.

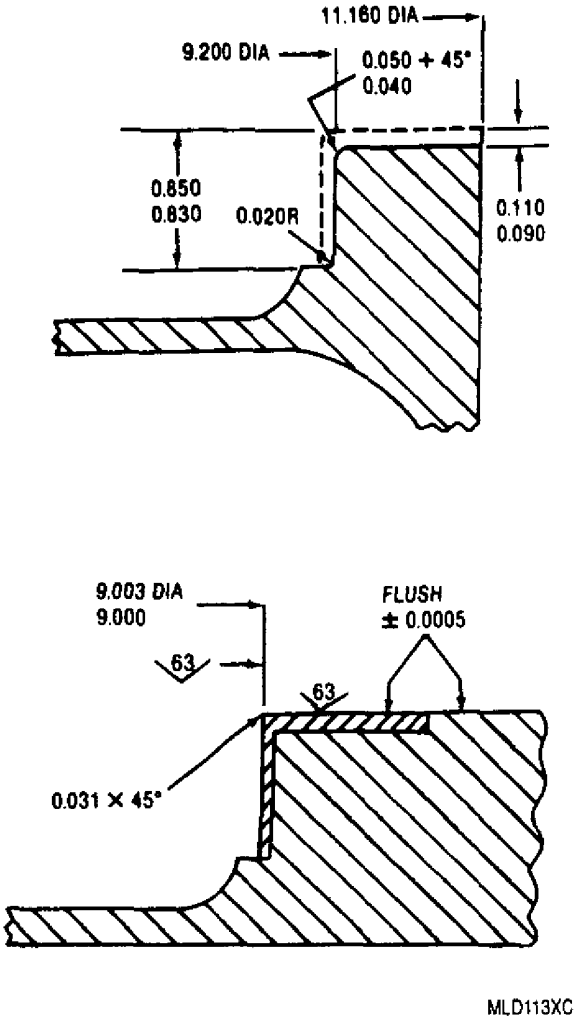

Figure 12. Alternator Pad and Flange Machining Dimensions

20. Side Mount Bore − Repair. (figure 16)

Materials Required

Specification No./Part No.	Nomenclature
AMS 5560, 5570, 5571, 5636, 5639, 5640, 5645 or 5646	Steel, stainless
——	Pin, brass (AR)

a. Enlarge side mount bore diameter to 3.125 in. located within 0.005 in. radius of true position.

b. Fabricate an insert of stainless steel from AMS 5560, 5570, 5571, 5636, 5639, 5640, 5645 or 5646. Machine insert to provide 0.0035 − 0.0045 in. tight fit.

c. Install insert and drill 3 holes 0.9375 x 0.15625 (15/16 x 5/32) in. deep, select brass pins for drive fit and peen flush.

d. Machine insert flush to 0.005 in. below pad surface. Machine bore 3.000 − 3.002 in. located within 0.005 in. radius of true position.

21. INNER DIAPHRAGM ASSEMBLY.

22. Inner Diaphragm Assembly − Inspection.

a. Inspect inner diaphragm assembly. Refer to table 2.

b. Refer to WP 017 00 for fluorescent penetrant inspection (FPI) procedures.

23. Inner Diaphragm Assembly − Repair.

a. Repair inner diaphragm assembly. Refer to Disposition column, table 2.

b. Replace inner diaphragm assemblies not within serviceable limits after repair.

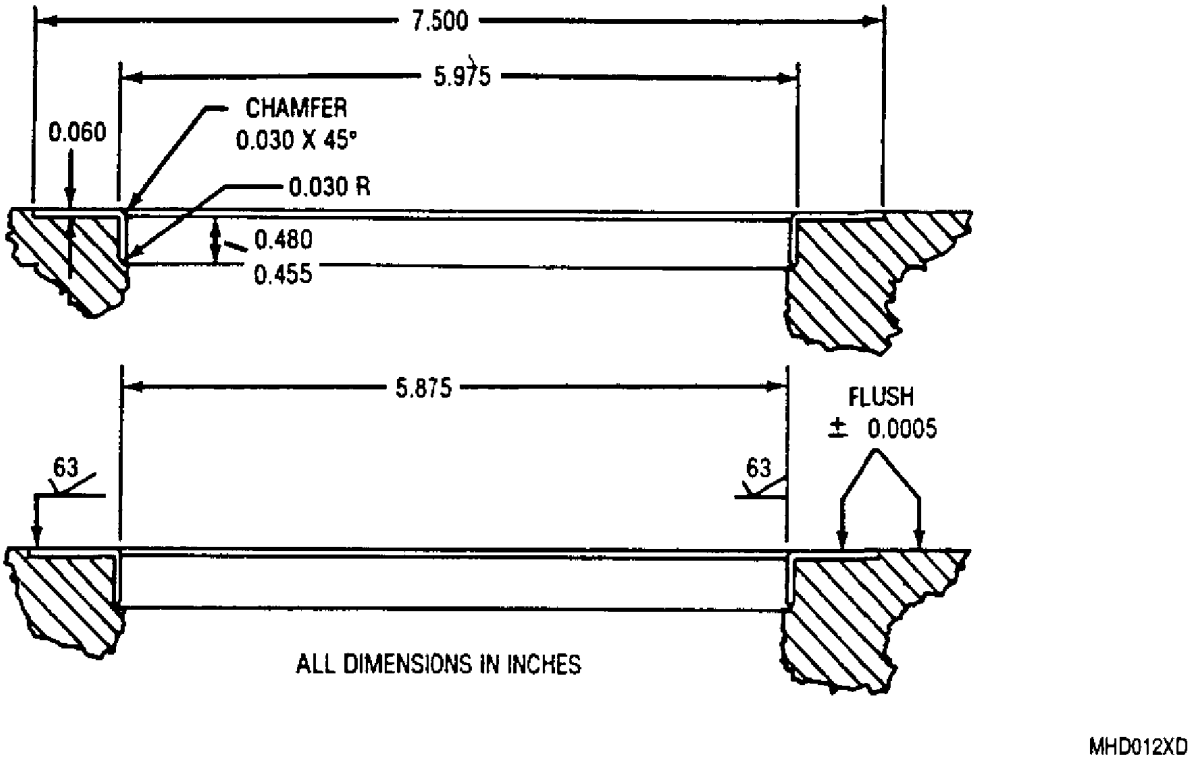

Figure 13. Rear Pinion Pilot Diameter Repair

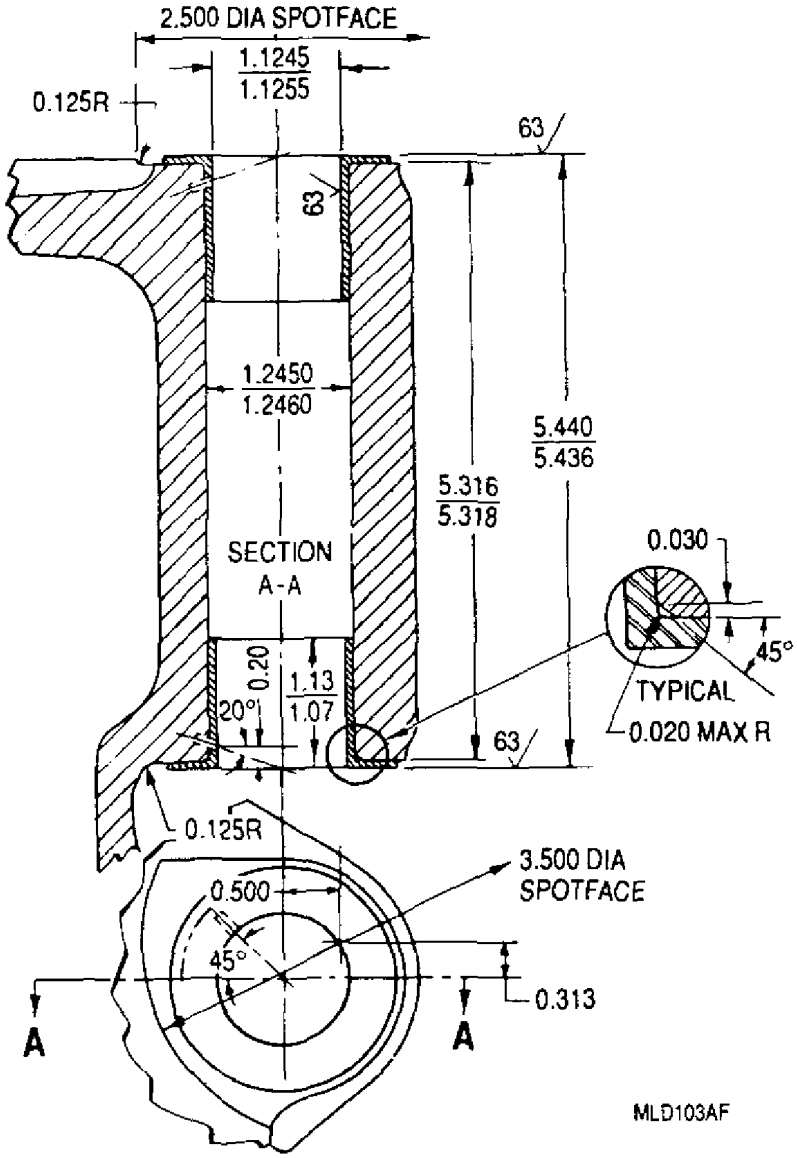

Figure 14. Reduction Gear Eyebolt Boss and Hole Repair

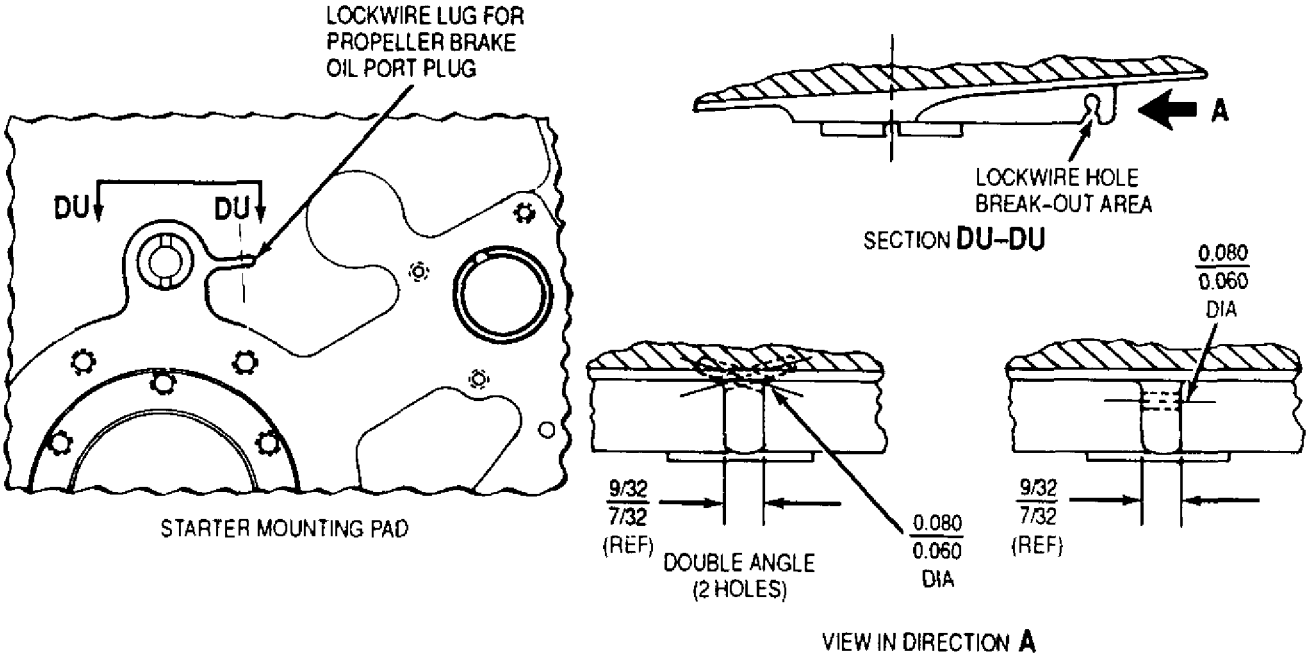

MLD157XD

Figure 15. Lockwire Lug (Propeller Brake Oil Port) −Damaged (Break−Out) Hole Repair

Table 2. Inner Diaphragm Assembly − Inspection and Repair

Condition	Serviceable Limits	Repairable Limits	Disposition
Cracks (any location).	Not serviceable.	Not repairable.	Condemn inner diaphragm assembly exceeding serviceable limits.
Inner diaphragm mounting pads height variation.	0.006 in. FIR with diaphragm in free state.	Exceeds serviceable limits.	Machine mounting pads with a skim cut to the minimum print limit. If unable to repair by machining, repair per paragraph 24, this WP.
Inner diaphragm boss height variation.	Refer to paragraph 25, this WP	Exceeds serviceable limits.	Repair boss height per paragraph 26, this WP.
Loose bearing cage.	Not serviceable.	Any looseness.	Replace loose bearing cage. Refer to WP 011 00.
Worn bearing bore faces.	Max wear 0.0025 in.	Exceeds serviceable limits.	Repair worn bearing bore faces. Refer to WP 012 00.

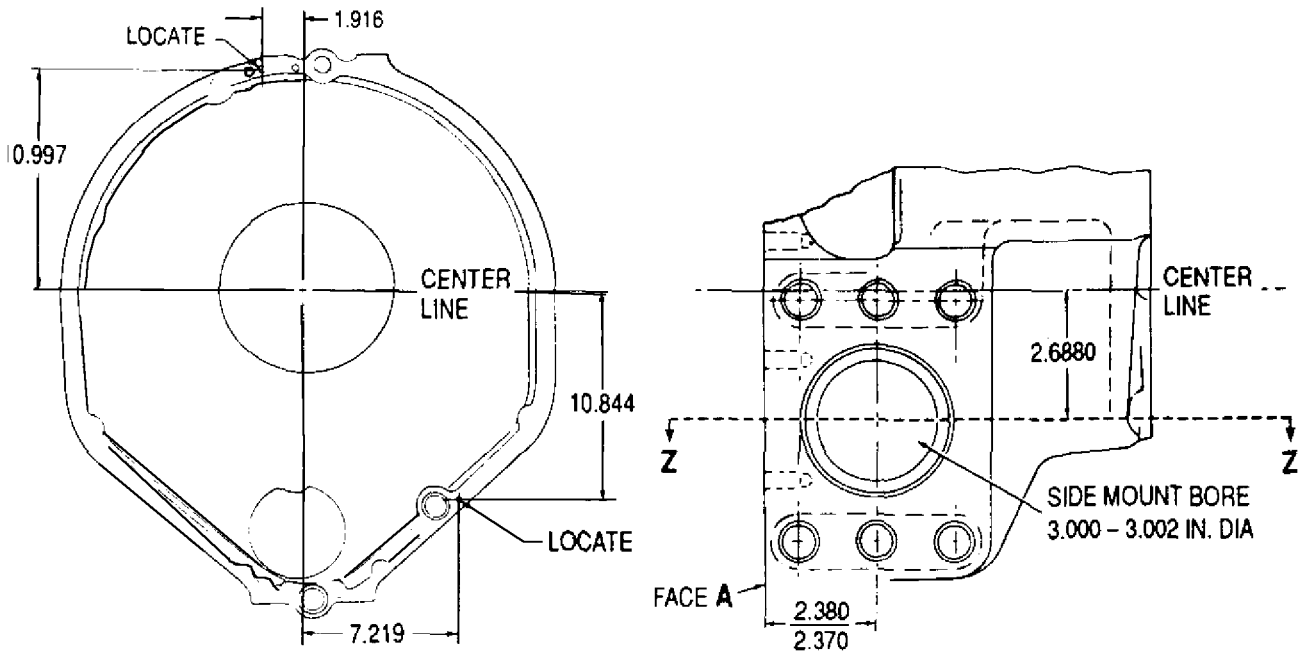

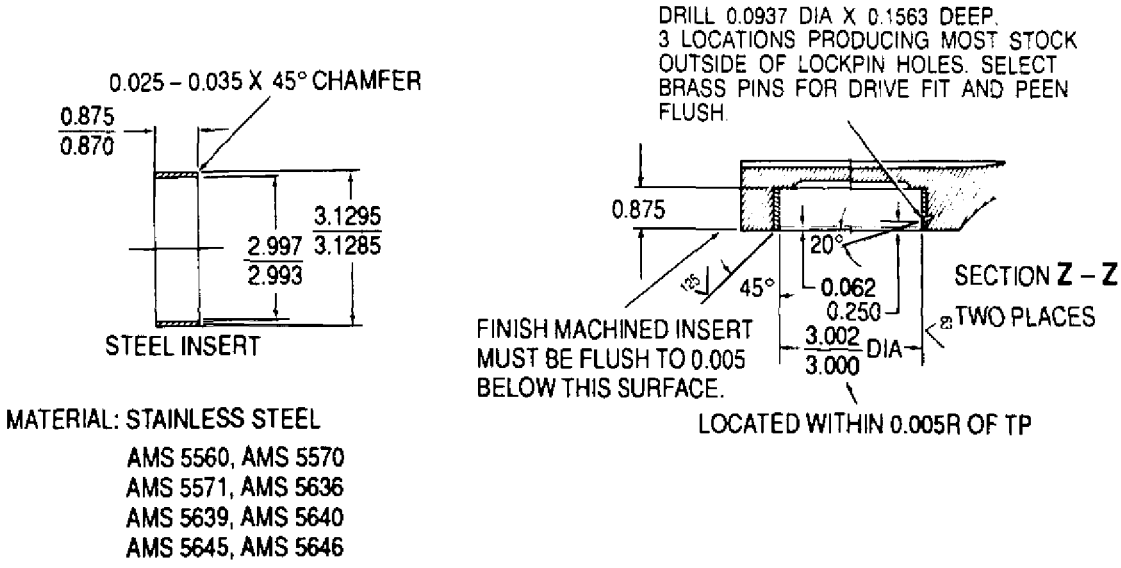

MATERIAL: STAINLESS STEEL
AMS 5560, AMS 5570
AMS 5571, AMS 5636
AMS 5639, AMS 5640
AMS 5645, AMS 5646

MLD107XA

Figure 16. Reduction Gear Rear Housing Side Mount Bore Repair

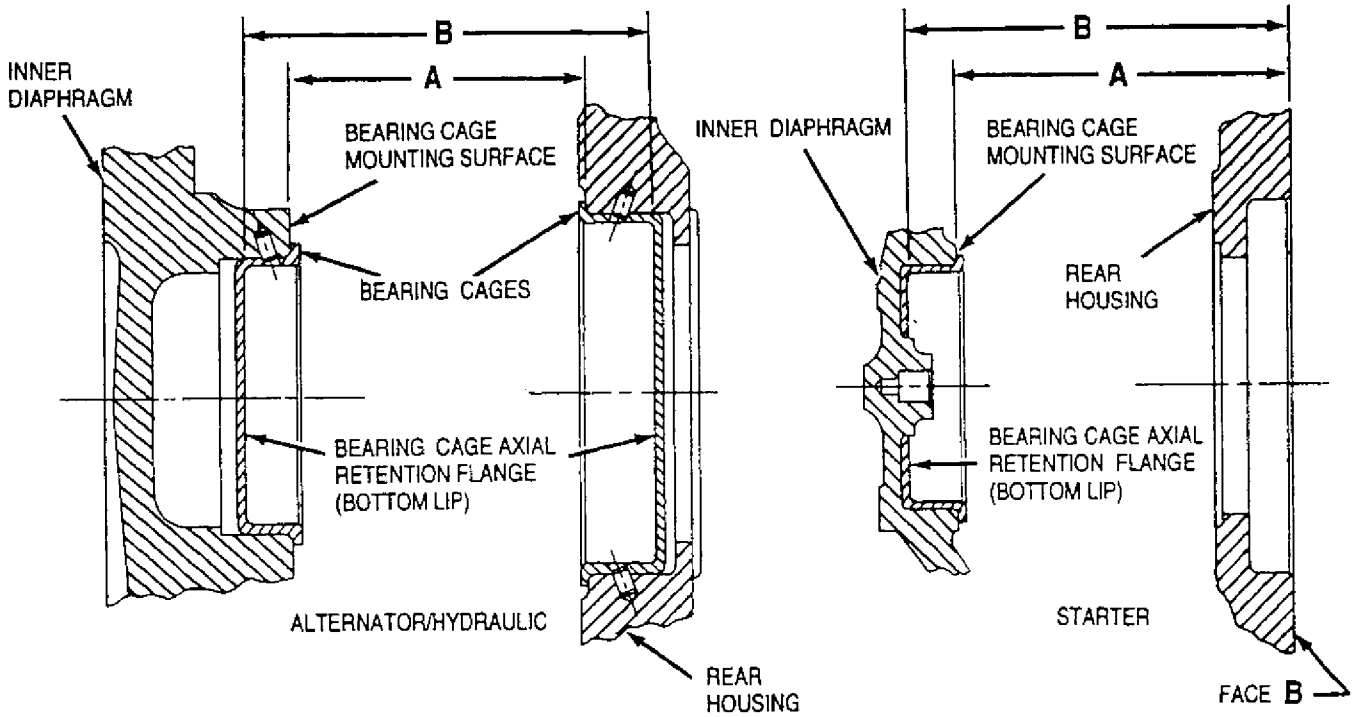

BORES	DIMENSION **A**	DIMENSION **B**
HYDRAULIC	1.5500 − 1.5620	2.6100 − 2.6260
ALTERNATOR	2.1515 − 2.1635	3.2115 − 3.2275

MHD016XD

Figure 17. Inner Diaphragm to Rear Housing Bore Axial Distance

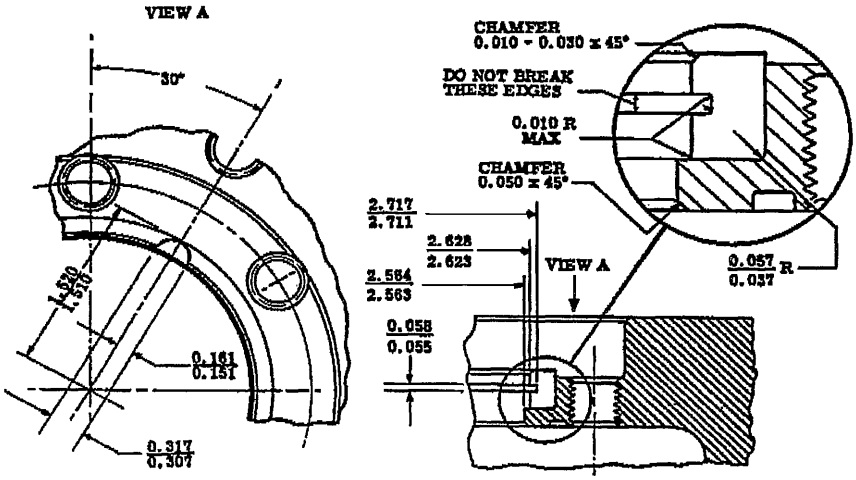

Figure 18. Starter Mounting Pad Seal Bore Limits

24. Inner Diaphragm Mounting Pads − Repair. (figure 17)

a. Mounting pads which cannot be repaired with a skim cut should be machined no more than .015 in. below print minimum. Metallize with Sprabronze AA (WP 018 00) and machine to print limits. Spray thickness after machining to be 0.006 − 0.015 in.

b. Axis established by bare diameters shall be square with mounting pads within 0.0005 in. per in. and concentric with housing pad bore within 0.002 in. FIR.

c. Measure axial distance between the bores of the inner diaphragm and the rear housing. Dimensions shown in figure 17 shall be met.

25. Inner Diaphragm Boss − Height Inspection. (figures 19 and 20)

a. Set inner diaphragm front face down in free state on parallel blocks and shims.

b. The three mating surfaces of bosses A, B, C (figure 19) define Plane BT (figure 20).

c. Mating surface of remaining bosses shall be in Plane BT within 0.006 in. FIR.

26. Inner Diaphragm Boss − Height Repair. (figures 17 and 20)

a. Machine mounting bosses with a skim cut. Boss height should be measured using the nearest bore face. The boss height after machining shall meet minimum dimensions shown in figure 20.

b. Mounting bosses which cannot be repaired with a skim cut should be machined no more than .015 in. below print dimensions (figure 17). Metallize with Sprabronze AA (WP 018 00) and machine to print. Spray thickness after machining to be 0.006 − 0.015 in. Axis established by bore diameters shall be square with plane BT within 0.0005 in. per in. and concentric with housing pad bore within 0.002 in. FIR.

c. Measure the axial distance between the bores of the inner diaphragm and the rear housing. Dimensions in Figure 17 and 18 must be met.

27. REDUCTION GEAR REAR HOUSING AND INNER DIAPHRAGM ASSEMBLY − BEARING BORE ALIGNMENT CHECK.

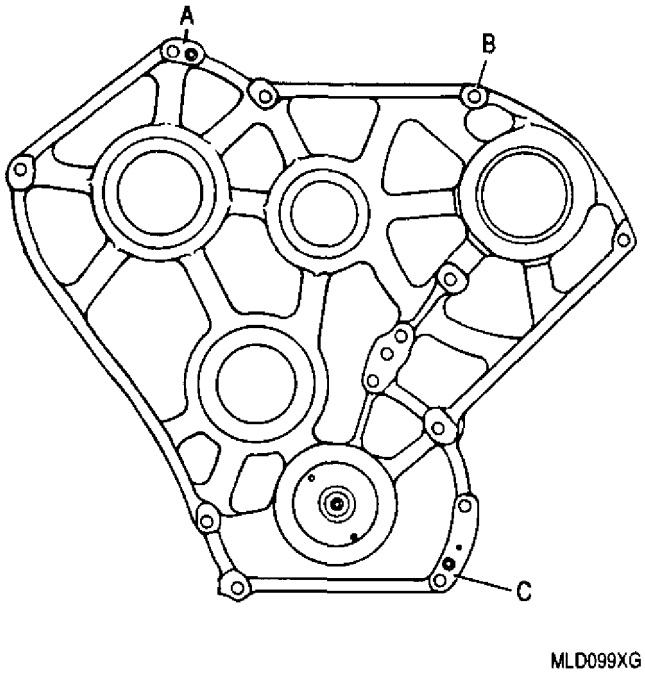

Figure 19. Inner Diaphragm Boss Location

CAUTION

Front housing, main diaphragm, inner diaphragm, and rear housing are bore aligned as a set. Do not intermix other parts once bore alignment has been accomplished.

NOTE

Bore alignment is calculated with cages installed. If check is done without cages, subtract 0.0005 in. to determine limits without cages.

a. Seal bore diameters and accessory pad diameters shall be concentric with the rear housing bearing cage bore diameters within 0.003 in. FIR. Rear housing bearing cage bore shall be used as reference bore.

b. Main diaphragm front pinion bearing cage bore shall be concentric to main diaphragm rear carrier bearing cage bore within 0.008 in. FIR. Main diaphragm rear carrier bearing cage bore shall be used as reference bore.

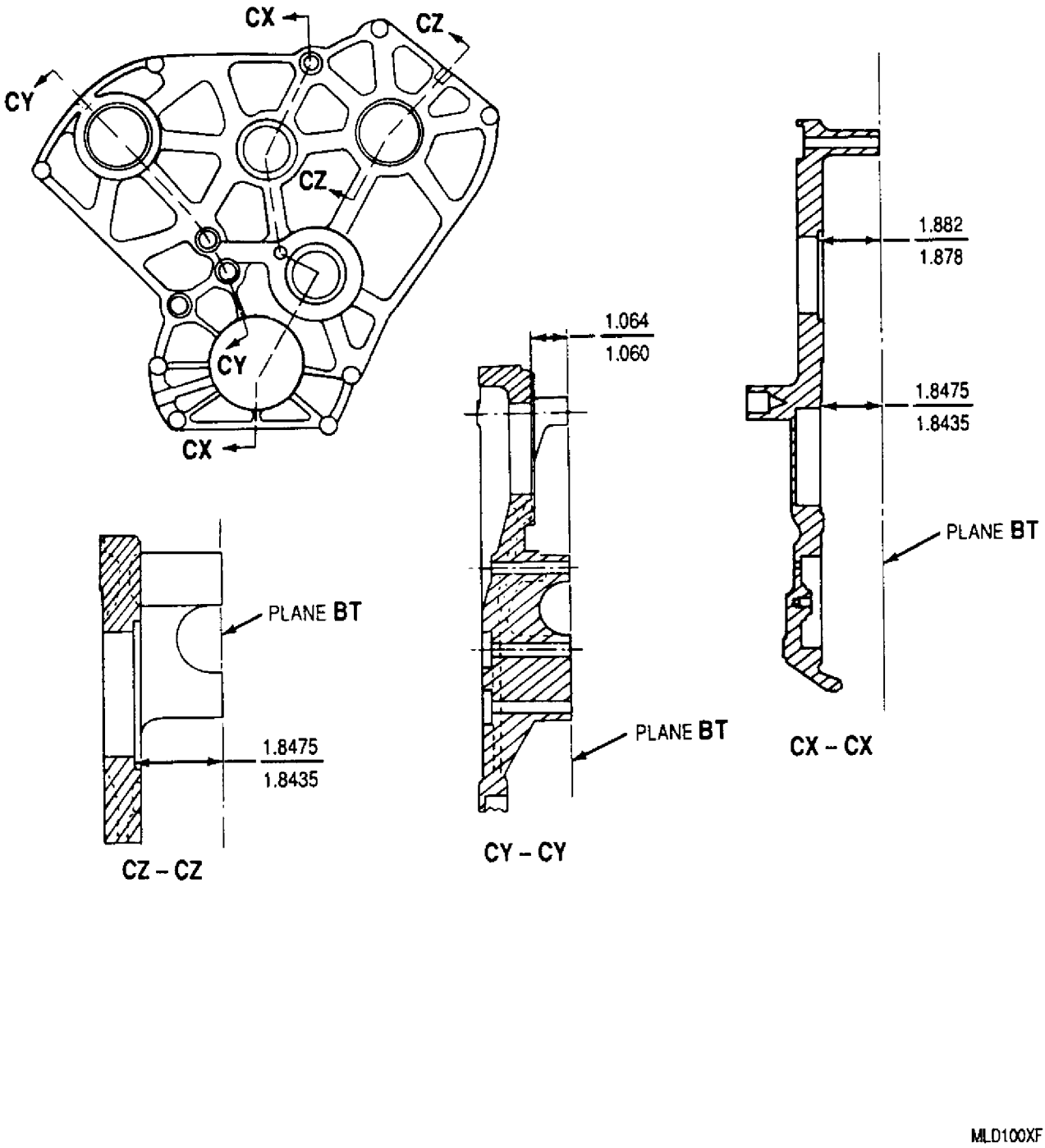

Figure 20. Inner Diaphragm Boss Height Dimension

DEPOT MAINTENANCE

INSPECTION AND REPAIR

REDUCTION GEAR FRONT HOUSING ASSEMBLY

Reference Material

General Inspection, Repair and Replacement − Procedure . . . . . WP 009 00
Bearing Cages − General Inspection, Repair and Replacement . . . . . WP 011 00
Magnetic Particle and Fluorescent Penetrant Inspection − Procedures . . . . . WP 017 00
Plating and Surface Treatment of Parts . . . . . WP 018 00
Reduction Gear Front and Rear Housing Assemblies
and Main Diaphragm Assembly − Painting . . . . . WP 040 00
Maintenance . . . . . NAVAIR 02B−5DG−6−1
Reduction Gear Drain Plug Threaded Insert − Maintenance . . . . . WP 032 00
Reduction Gear Magnetic Plug, Oil Screen, and Threaded Insert − Maintenance . . . . . WP 072 00

Alphabetical Index

Subject **Page No.**

Introduction 2
Reduction Gear Front Housing Assembly 2
Inspection 2
Repair 2
Bearing Cage − Replacement 7
Drain Plug Threaded Insert − Replacement 6
Front Face − Corrosion Repair 8
Negative Torque System Actuator Rod Seal Bore − Rework 6
Negative Torque System Actuator Rod Bushing − Replacement 7
Scavenge Outlet Body Threaded Insert − Replacement 6
Screw Bushing Boss Crack − Magnesium Plug Repair 4
Screw Bushing Boss Crack − Weld Repair 5

Record of Applicable Technical Directives

None

1. **INTRODUCTION.**

2. This work package (WP) provides the instructions for inspection and repair of the reduction gear front housing assembly used on the T56−A−427 turboprop engine.

3. **REDUCTION GEAR FRONT HOUSING ASSEMBLY.**

4. FRONT HOUSING ASSEMBLY − INSPECTION.

a. Inspect front housing assembly. Refer to table 1.

b. Refer to WP 017 00 for fluorescent penetrant inspection (FPI) procedure.

5. FRONT HOUSING ASSEMBLY − REPAIR.

Materials Required

Specification No./Part No.	Nomenclature
AZ101	Rod, welding
Sprabronze AA	Coating, metal

a. Repair front housing assembly. Refer to table 1, Disposition column.

b. Replace housing assemblies not within serviceable limits after repair.

Table 1. Reduction Gear Front Housing Assembly − Inspection and Repair

Condition	Serviceable Limits	Repairable Limits	Disposition
Cracks (all locations except screw bushings).	Not serviceable.	Not repairable.	Condemn front housing exceeding serviceable limits.
Screw bushing boss.	Not serviceable.	0.115 in. min stock outside tapped hole.	Plug repair. Refer to paragraph 6, this WP or may be weld repaired. Refer to paragraph 7, this WP.
FPI indication inside of the front housing.	No crack indications.	3.00 in. max length, after blending to a max of 1/32 in. depth. Cracks cannot extend below the max blending depth of 1/32 in.	If indication is still apparent inside the case, after blending: a. Strip paint from outside of housing in affected area. b. Heat and FPI again. c. Reject housing if indication extends through housing wall. d. Reject housing having line−type indication emanating from porosity, thus indicating a fatigue−type condition.
Damaged housing−to−diaphragm mating surfaces.	Damage which does not: a. Break both edges (or inside edge to bolt hole.) b. Exceed 75% of split−line width (or of distance from inside edge to bolt hole). c. Exceed 0.010 in. depth. d. Include roughness or metal build−up.	Maximum depth of 0.015 in.	Lap to remove metal build up. Machine (phonograph) damaged surfaces; do not exceed 0.015 in. in depth, Metallize with Sprabronze AA and machine to print.

Table 1. Reduction Gear Front Housing Assembly − Inspection and Repair (contd)

Condition	Serviceable Limits	Repairable Limits	Disposition
Mating Flange Warpage.	Max warpage of 0.009 in.	Exceeds serviceable limits.	Machine flange with skim cut. Flange thickness after machining must meet minimum print limits. If unable to repair with skim cut, machine flange no more than 0.015 in. below print limits. Metallize with Sprabronze AA per WP 018 00 and machine to print limits. Spray thickness after machining must be within 0.006 −0.015 in.
Damaged screw bushing.	Not serviceable.	Any amount of damage.	Condemn bushing exceed ing serviceable limits.
Nose bearing cage: Loose.	No looseness.	Any looseness.	Replace cage, oversize if required. Refer to paragraph 12, this WP. Damaged cage bore can be repaired per WP 011 00 when necessary.
ID out−of−round.	Max of 0.003 in. (Based on 4 measurements approx. 45° apart). Acceptable range is 8.2705−8.2682 in.	Exceeds serviceable limits.	Replace cage, oversize if required. Refer to paragraph 12, this WP. Damaged cage bore can be repaired per WP 011 00 when necessary.
Worn ID.	Max ID of 8.2739 in. over a 10° area, if separated by a 100° area and ID does not exceed 8.2705 in.	Exceeds serviceable limits.	Replace cage, oversize if required. Refer to paragraph 12, this WP. Damaged cage bore can be repaired per WP 011 00 when necessary.
Wear of NTS actuator rod bushing ID, located at one and seven o'clock positions.	Not serviceable.	Visible wear.	Replace bushing. Refer to paragraph 11, this WP.
Wear of NTS actuator rod seal bores.	Not serviceable.	Any visible wear.	Rework seal bores. Refer to paragraph 10, this WP.
Corrosion on surface (figure 5).	Maximum pit depth 0.015 in.	Maximum 0.030 in. deep.	Repair surface G. Refer to paragraph 13, this WP.
Paint damage.	No damage.	Any damage.	Touch−up or respray. Refer to WP 040 00.

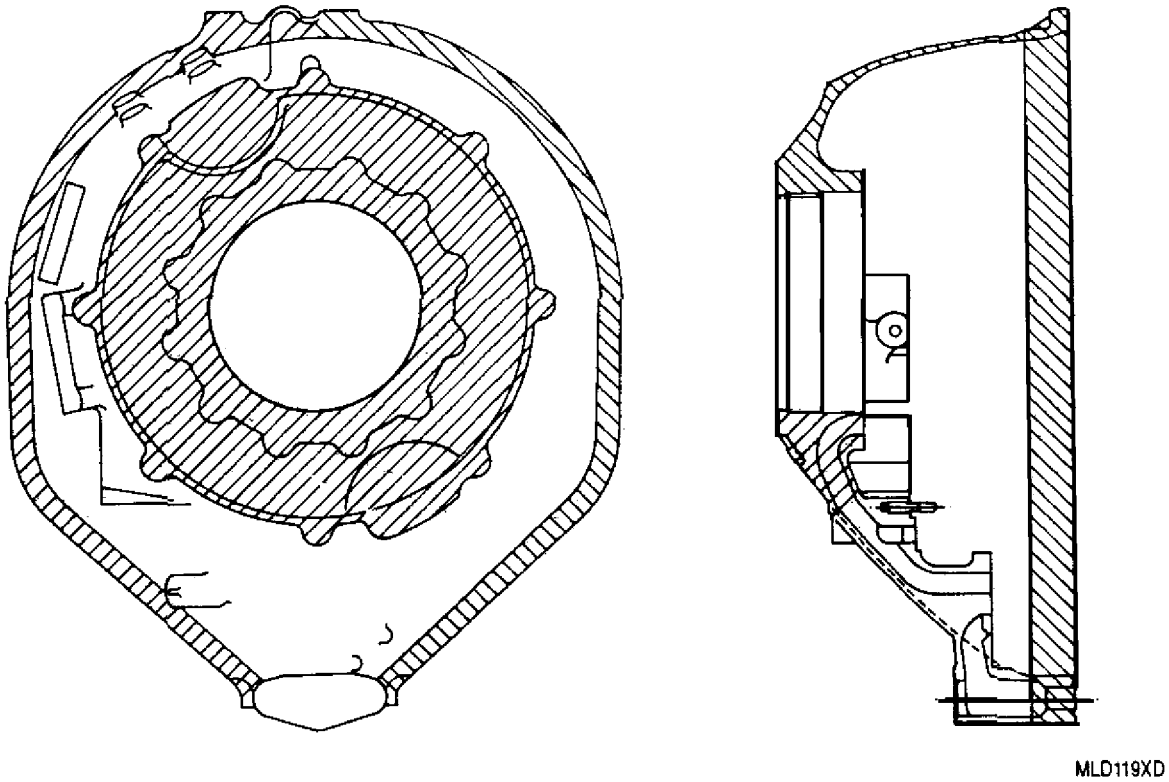

Figure 1. Reduction Gear Front Housing Stress Areas

6. Screw Bushing Boss Crack − Magnesium Plug Repair. (figure 2)

Materials Required

Specification No./Part No.	Nomenclature
MS9486−25	Pin (AR)
MS17319−280	Bushing, screw (AR)
——	Stock, magnesium (AR)
——	Screw, magnesium 8−32 (AR)

a. Remove pin and screw bushing from cracked boss.

b. Enlarge bushing hole in boss using a drill size that will remove crack and be of a size to permit tapping with an appropriate size UNF tap. Depth of hole shall be 0.600 − 0.650 in.

c. Tap hole to 0.600 in. minimum.

d. Check boss wall thickness at outermost radial edge. Thickness between edge of boss and major diameter of thread shall not be less than 0.115 in. If wall thickness is less than 0.115 in., weld repair boss per WP 009 00.

e. Fabricate a threaded magnesium plug. Plug fit shall be 0.000−0.003 in. tight with hole thread pitch diameter.

f. Install plug and peen lightly at top edge of plug.

g. Locate, drill and tap hole in plug and housing (figure 2) for the 8−32 magnesium screw. Install screw and peen lightly at top edge of screw.

h. Locate and machine plug, to accept replacement screw bushing, to print dimensions.

i. Install replacement screw bushing 0.0100.030 in. below surface. Locate pin hole in most stock area and drill a 0.0913 − 0.0933 in. hole 0.219 in. deep. Select pin for drive fit, install pin and stake metal over slightly.

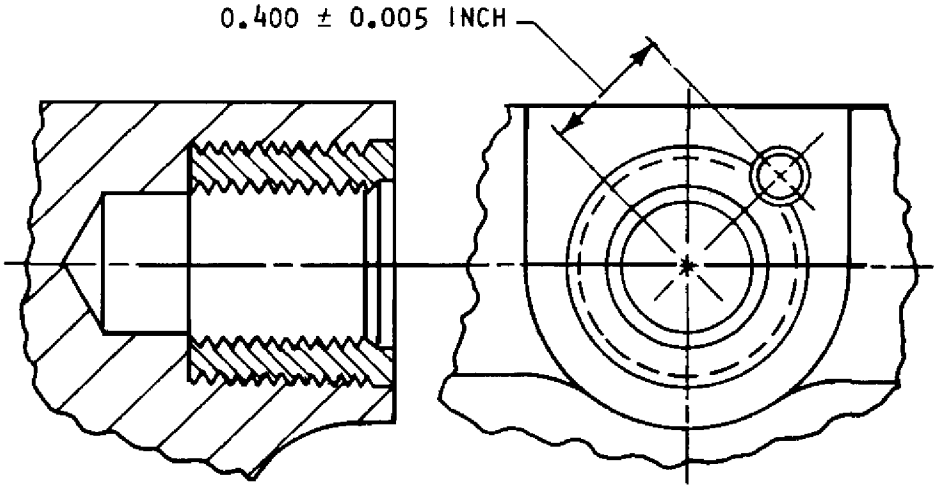

MLD121XE

Figure 2. Front Housing Screw Bushing Boss Cracks − Magnesium Plug Repair

7. Screw Bushing Boss Crack − Weld Repair. (figure 3)

Support Equipment Required

Part No./Type Designation	Nomenclature
——	Magnifier, 10X

Materials Required

Specification No./Part No.	Nomenclature
AMS 4434	Material, filler
AZ101	Rod, welding

a. Grind or mill area around hole to remove cracked area. Install copper plug in hole (0.010 in. minus minor dia) and weld.

b. Clean area to remove all dirt, grease, oil, oxide, paint and sand prior to welding.

c. Build−up area with stringer beads, using weld rod AZ101. Use 1/8 in. dia (max) filler material (AMS 4434). Use GTAW−MA method.

d. Weld in horizontal position. Use suitable backup and an amperage foot control on the welder.

e. Examine each bead with a 10X magnifier before depositing subsequent bead. Blend out any visible defects.

f. Allow two to three minutes between subsequent welds to prevent excessive heat induction in surrounding area.

g. Use suitable chill fixture adjacent to weld area.

h. Keep chill fixtures in place until part has cooled to room temperature.

i. Weld shall extend 3/32 in. above original dimension of any surface to allow stock for finishing surfaces.

j. Examine completed weld with 10X magnifier. Remove all visible defects. Reweld where necessary.

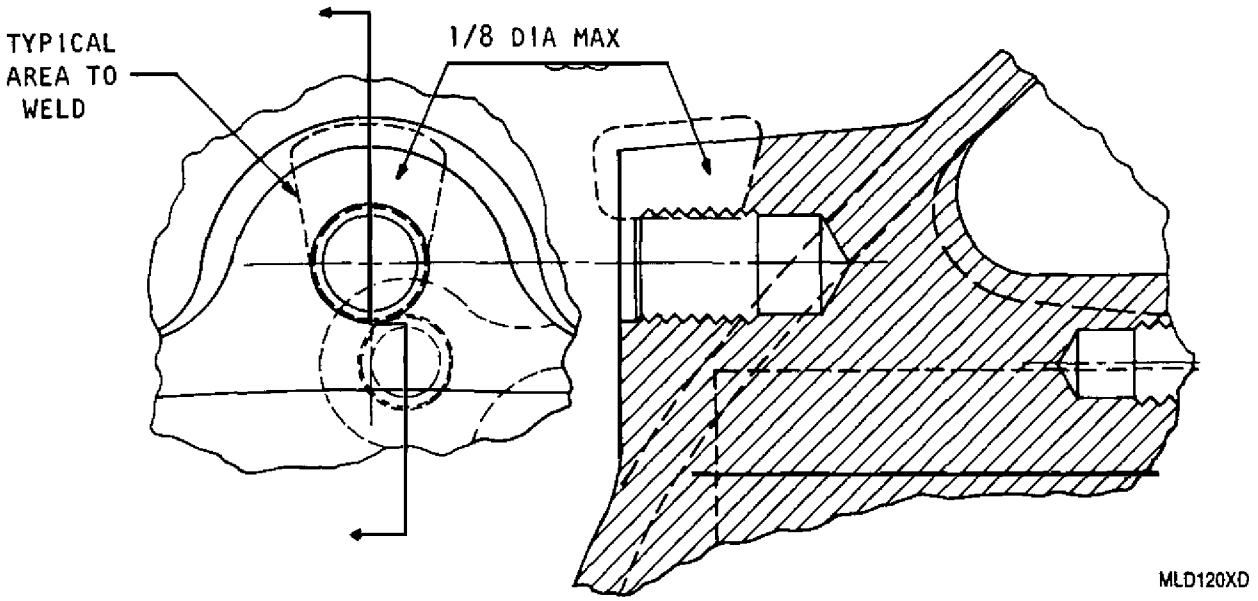

Figure 3. Front Housing Screw Bushing Boss − Weld Repair

WARNING

Heated parts will cause skin damage (burns). Use clean insulated gloves to handle parts.

k. Heat treat two hours at 350°F (177°C). Cool in still air or furnace.

l. Retain part in fixture, if necessary, to control distortion during heat treat.

m. Finish machine to detail print; x−ray after finish machining.

8. Drain Plug Threaded Insert − Replacement.

a. Refer to NAVAIR 02B−5DG−6−1, WP 032 00.

9. Scavenge Outlet Body Threaded Insert Replacement.

a. Refer to NAVAIR 02B−5DG−6−1, WP 072 00.

10. Negative Torque System Actuator Rod Seal Bore − Rework. (figure 4) This rework procedure repairs worn original seal bores by incorporating a replaceable NTS actuator rod bushing.

Materials Required

Specification No./Part No.	Nomenclature
AN150306	Pin (1)
AS3085−014	Packing, preformed (1)
6843526	Bushing, NTS actuator rod (1)

a. Enlarge worn seal bore diameter (0.3745 − 0.3755 in.) to 0.5080 − 0.5162 in.

b. Counter drill the 0.580 − 0.588 in. diameter to 2.764 − 2.779 in. deep. Maintain surface texture and chamfer requirements shown (figure 4).

c. Flat−bottom drill 0.928 − 0.948 in. diameter to 2.679 − 2.683 in. deep.

d. Countersink the counter drilled diameter (step b.) 120° ± 0°, 30 seconds included to a diameter of 0.688 − 0.703 in. Maintain surface texture shown. Countersink diameter shall be concentric with Diameter N within 0.003 in. FIR.

e. Thread the 0.5080 − 0.5162 in. diameter hole using 9/16−18 UNJF−3B tap. Thread pitch diameter shall be concentric with countersink diameter (step d.) and Diameter N within 0.003 in. FIR.

f. Install packing on bushing. Install bushing and torque 65−75 lb in. (QA)

g. Drill 0.060 − 0.062 in. diameter pin hole 0.156 in. deep. Select pin for drive fit. Stake metal over pin slightly.

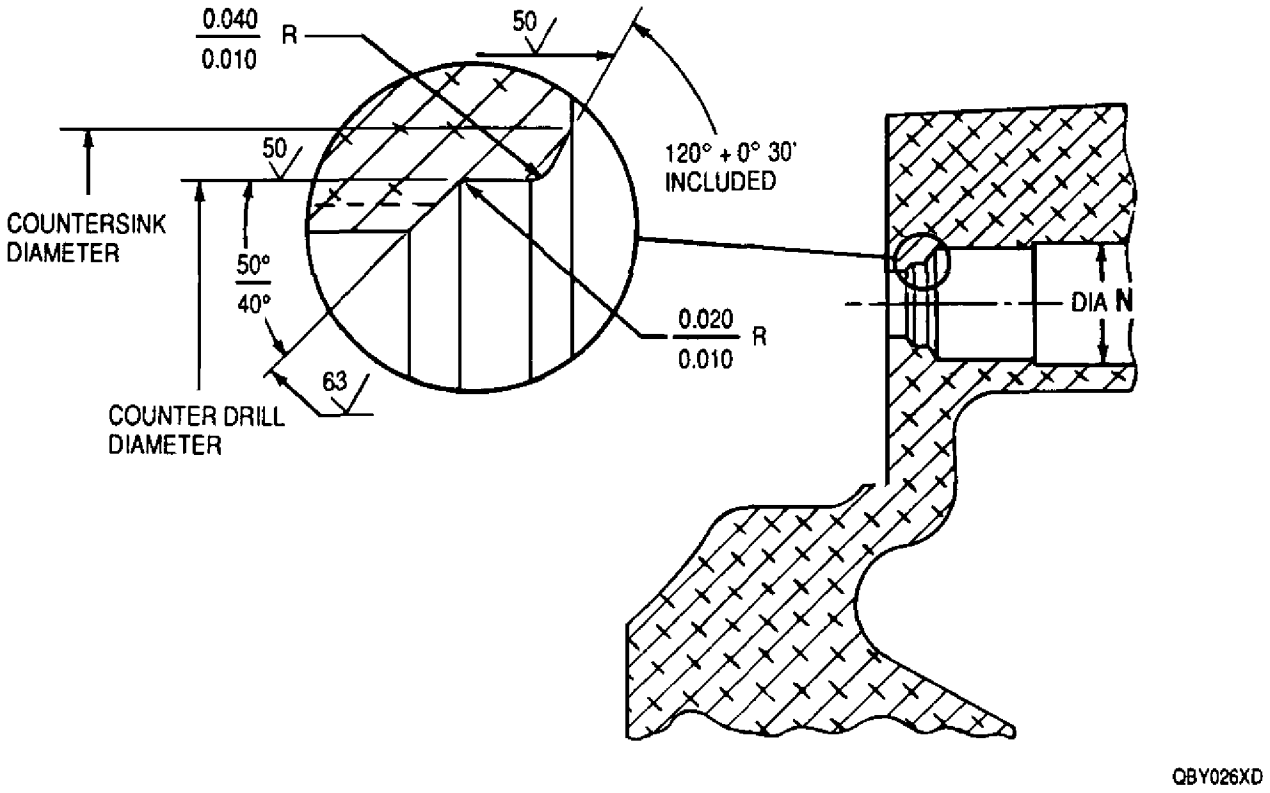

Figure 4. Negative Torque System Actuator Rod Seal Bore − Rework

11. Negative Torque System Actuator Rod Bushing − Replacement.

Materials Required

Specification No./Part No.	Nomenclature
AN150306	Pin (1)
AS3085−014	Packing, preformed (1)
6843526	Bushing, NTS actuator rod (1)

a. Remove existing pin, bushing and packing.

b. Install packing on bushing. Install bushing and torque 65−75 lb in. (QA)

c. Drill 0.060 − 0.062 in. diameter pinhole 0.150 in. deep. Select pin for drive fit. Stake metal over pin slightly.

12. Bearing Cage − Replacement.

Materials Required

Specification No./Part No.	Nomenclature
*6877390−1	Cage, nose bearing (1)

*Oversize available.

a. Install nose bearing thrust plate on housing to align cage tangs.

NOTE

Position the thrust plate with the two removal slots on the plate OD aligned with the horizontal centerline (Non PPC−112) or with the vertical centerline (PPC−112) of the case. Thrust plates with “TOP” marked in the groove of the plate front face shall be installed with the indicated “TOP” at the 12 o’clock position of the case.

b. Select replacement nose bearing cage to obtain a 0.002 − 0.004 in. tight fit and an installed ID of 8.2684 − 8.2699 in. when cooled to room temperature.

WARNING

Heated parts will cause skin damage (burns). Use clean insulated gloves to handle parts.

c. Heat cage bore area and install cage with tangs aligned with slots in installed thrust plate.

d. Remove thrust plate after cage installation.

CAUTION

Front housing, main diaphragm, inner diaphragm, and rear housing are bore aligned as a set. Do not intermix other parts once bore alignment has been accomplished.

e. Bearing cage shall be concentric to main diaphragm rear carrier bearing cage bore within 0.008 in. FIR. Main diaphragm bearing cage bore shall be used as reference bore.

13. Front Face − Corrosion Repair. (figure 5)

Materials Required

Specification No./Part No.	Nomenclature
Sprabond	Material, bonding
Sprabronze AA	Coating, metal

NOTE

Localized corroded areas may be removed by grinding.

a. Remove corrosion on Surface G by machining. Do not exceed 0.030 in. depth or diameter of 10.250 in.

b. Buildup machined area with Sprabond bonding material and Sprabronze AA coating alloy. Refer to WP 018 00.

c. Open the two 0.279 − 0.283 in. and eight 0.342 − 0.346 in. holes, using appropriate sized drills, from inside of housing.

d. Machine Surface G to dimensions shown (figure 5).

e. Countersink the 0.279 − 0.283 in. holes to dimension shown (figure 5).

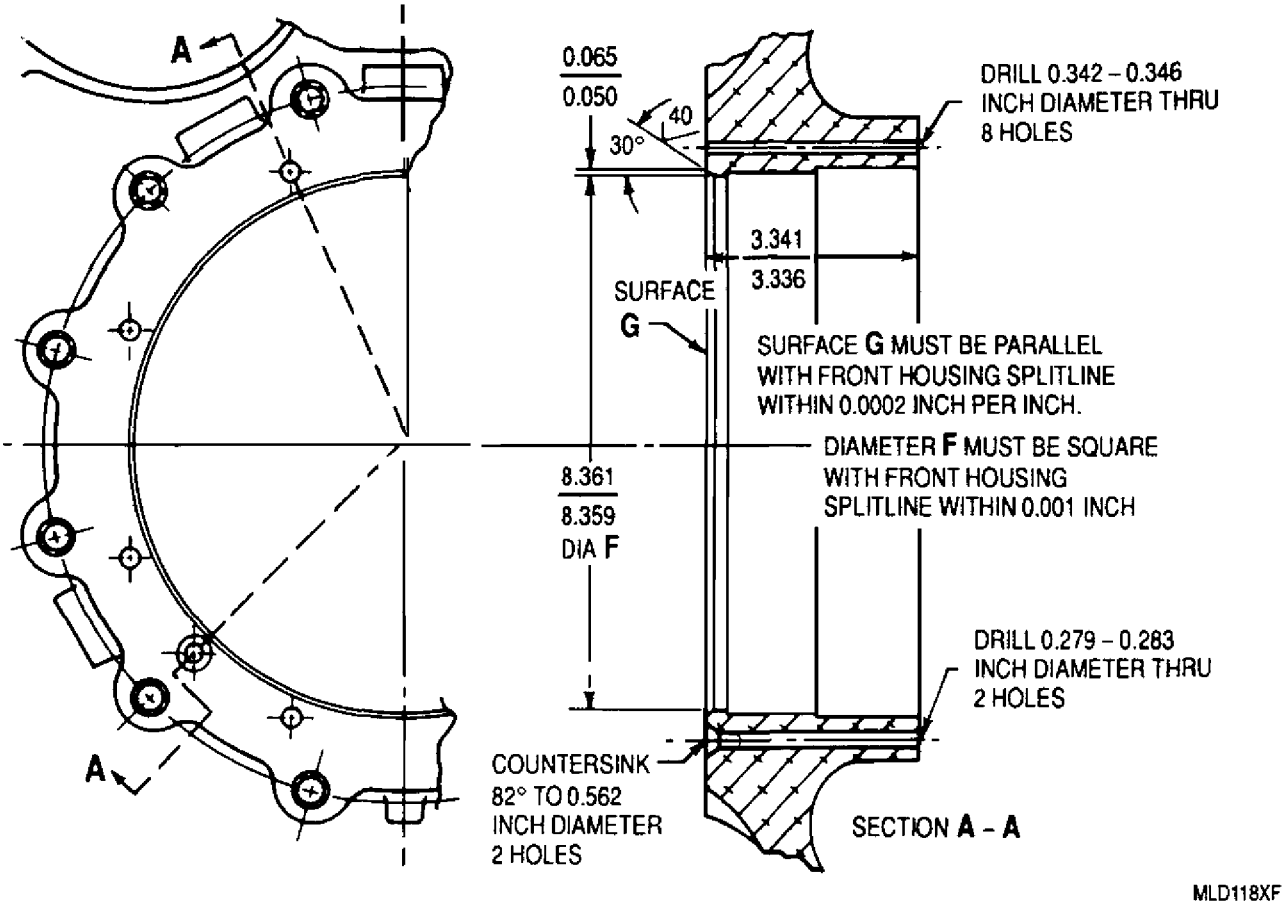

Figure 5. Front Housing Front Face − Corrosion Repair

DEPOT MAINTENANCE

INSPECTION AND REPAIR

MAIN DIAPHRAGM ASSEMBLY
CARRIER REAR BEARING RETAINING PLATE
CARRIER REAR BEARING RETAINING SEGMENT PLATE
CARRIER REAR KEYED BEARING RETAINING SEGMENT PLATE

Reference Material

Bearing Cages − Inspection, Repair and Replacement . . . . . WP 011 00
Magnetic Particle and Fluorescent Penetrant Inspection − Procedures . . . . . WP 017 00
Plating and Surface Treatment of Parts . . . . . WP 018 00
Reduction Gear Front and Rear Housing Assemblies
and Main Diaphragm Assembly − Painting . . . . . WP 040 00

Alphabetical Index

Subject **Page No.**

Carrier Rear Bearing Retaining Segment Plates and Keyed Segment Plate 8
Inspection 8
Repair 8
Chrome Plate Repair 8
Introduction 2
Main Diaphragm Assembly 2
Inspection 2
Repair 2
Bearing Bore Alignment Check 7
Carrier Rear Bearing Cage − Replacement 4
Oil Jet Nozzle Mounting Area Fretting − Repair 4
Pinion Gear Front Bearing Cage − Replacement 6
Pinion Gear Oil Jet Tube Pilot Hole − Repair 4

Record of Applicable Technical Directives

None

1. **INTRODUCTION.**

2. This work package (WP) provides inspection and repair procedures for the main diaphragm assembly, carrier rear bearing retaining segment plates and carrier rear keyed bearing retaining plate on the T56−A−427 engine.

3. **MAIN DIAPHRAGM ASSEMBLY.**

4. MAIN DIAPHRAGM ASSEMBLY − INSPECTION.

a. Inspect main diaphragm assembly. Refer to table 1.

b. Refer to WP 017 00 for fluorescent penetrant inspection (FPI) procedures.

5. MAIN DIAPHRAGM ASSEMBLY − REPAIR.

Materials Required

Specification No./Part No.	Nomenclature
Sprabronze AA	Coating, metal

a. Repair main diaphragm assembly. Refer to Disposition column, table 1.

b. Replace main diaphragm assemblies not within serviceable limits after repair.

Table 1. Main Diaphragm Assembly − Inspection and Repair

Condition	Serviceable Limits	Repairable Limits	Disposition
Crack indication (FPI) (any location).	Not serviceable.	Not repairable.	Condemn main diaphragm exceeding serviceable limits.
Damaged diaphragm−to − housing mating surfaces.	Damage which does not: a. Break both edges (or inside edge to bolt hole). b. Exceed 75% of split−line width (or of distance from inside edge to bolt hole). c. Exceed 0.010 in. depth. d. Include roughness or metal build−up.	Maximum depth of 0.015 in.	Lap to remove buildup. Machine (phonograph) damaged surfaces; do not exceed 0.015 in. in depth. Metallize with Sprabronze AA and machine to print.
Main Diaphragm flange warpage.	Max. warpage of 0.009 in.	Exceeds serviceable limits.	Machine flange with skim cut. Flange thickness after machining shall not be less than 0.8730 in. If unable to repair with machining alone, machine flange below print limits but not to exceed 0.015 in. on each side. Metallize with Sprabronze AA per WP 018 00 and machine to print limits. Spray thickness after machining shall be within 0.006−0.015 in.
Fretting on main diaphragm at mounting area of oil jet nozzle.	No fretting acceptable.	0.020 in. max depth.	Metallize repair. Refer to paragraph 6, this WP.
Wear on main diaphragm at pinion gear oil jet tube pilot hole.	0.369 in. max hole size.	Exceeds serviceable limits.	Repair hole exceeding serviceable limit. Refer to paragraph 7, this WP.

Table 1. Main Diaphragm Assembly − Inspection and Repair (contd)

Condition	Serviceable Limits	Repairable Limits	Disposition
Loose bearing cage.	Not serviceable.	Any looseness.	Replace carrier bearing cage per paragraph 8, this WP; pinion bearing cage per paragraph 9, this WP.
Rear carrier bearing cage: ID out−of−round.	Max. of 0.003 in. (Based on 4 measurements approx. 45° apart.) Acceptable ID range is 9.0551 − 9.0579 in.	Exceeds serviceable limits.	Replace cage per paragraph 8, this WP. Damaged cage bore can be repaired per WP 011 00.
Worn ID.	Max ID of 9.0613 in. over 10° areas, if separated by a 100° area and ID does not exceed 9.0579 in.	Exceeds serviceable limits.	Replace cage per paragraph 8, this WP. Damaged cage bore can be repaired per WP 011 00.
Pinion front bearing cage: ID out−of−round.	Max of 0.003 in. (Based on 4 measurements approx. 45° apart). Acceptable ID range is 5.3176 − 5.3199 in.	Exceeds serviceable limits.	Replace cage per para graph 9, this WP. Damaged cage bore can be repaired per WP 011 00.
Worn ID.	Max. ID of 5.1233 in. over 10° areas, if separated by a 100° area and ID does not exceed 5.3199.	Exceeds serviceable limits	Replace cage per paragraph 9, this WP. Damaged cage bore can be repaired per WP 011 00.
Paint damage.	No damage.	Any damage.	Touch−up or respray. Refer to WP 040 00.
Main diaphragm mating flange thickness.	0.8730 in., four places.	0.8700 in. min thickness.	Machine flange below print limits but not to exceed 0.015 in. on each side. Metallize with Sprabronze AA per WP 018 00 and machine to print limits. Spray thickness after machining shall be within 0.006−0.015 in.
Main diaphragm pinion bore flange thickness.	0.8730 in., four places.	0.8700 in. min thickness.	Machine flange below print limits but not to exceed 0.015 in. on each side. Metallize with Sprabronze AA per WP 018 00 and machine to print limits. Spray thickness after machining shall be within 0.006−0.015 in.
Main diaphragm rear carrier bore flange thickness.	0.9350 in., four places.	0.9320 in. min thickness.	Machine flange below print limits but not to exceed 0.015 in. on each side. Metallize with Sprabronze AA per WP 018 00 and machine to print limits. Spray thickness after machining shall be within 0.006−0.015 in.

6. Oil Jet Nozzle Mounting Area Fretting − Repair. (figure 1)

a. Machine area around tube bracket mounting base within dimensions shown (figure 1).

b. Metallize machined area with Sprabronze AA. Refer to WP 018 00. Apply metal coating to sufficient thickness for finish machining.

c. Machine repair area as shown. Clean threads by chasing with 0.250 − 28 bottom tap.

7. Pinion Gear Oil Jet Tube Pilot Hole − Repair. (figure 2)

Materials Required

Specification No./Part No.	Nomenclature
6808566	Support, flanged tube

a. Ream pilot hole to 0.566 − 0.567 in. located within 0.001 in. radius of true position shown (figure 2).

b. Countersink hole 90° to diameter of 0.688 in.

c. Install, and seat flanged tube support.

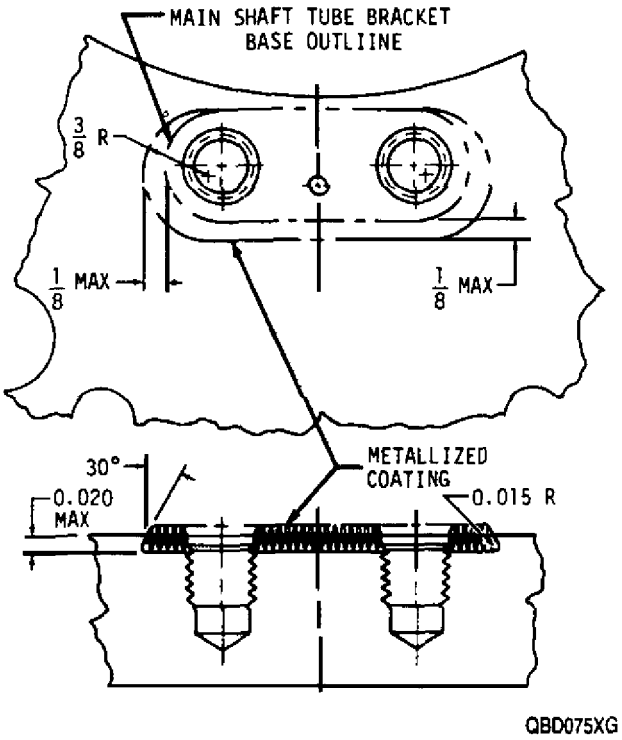

Figure 1. Oil Jet Nozzle Mounting Area Fretting − Repair

8. Carrier Rear Bearing Cage − Replacement. This procedure is accomplished with the pinion gear bearing cage installed. If the pinion gear bearing cage requires replacement, it shall be replaced before the carrier rear bearing cage. When the carrier rear bearing cage is replaced first, the tight fit (0.014 − 0.016 in.) of the cage causes a distortion of the diaphragm in its free state. This distortion will cause an out−of−round condition of the pinion gear bearing cage when it is installed.

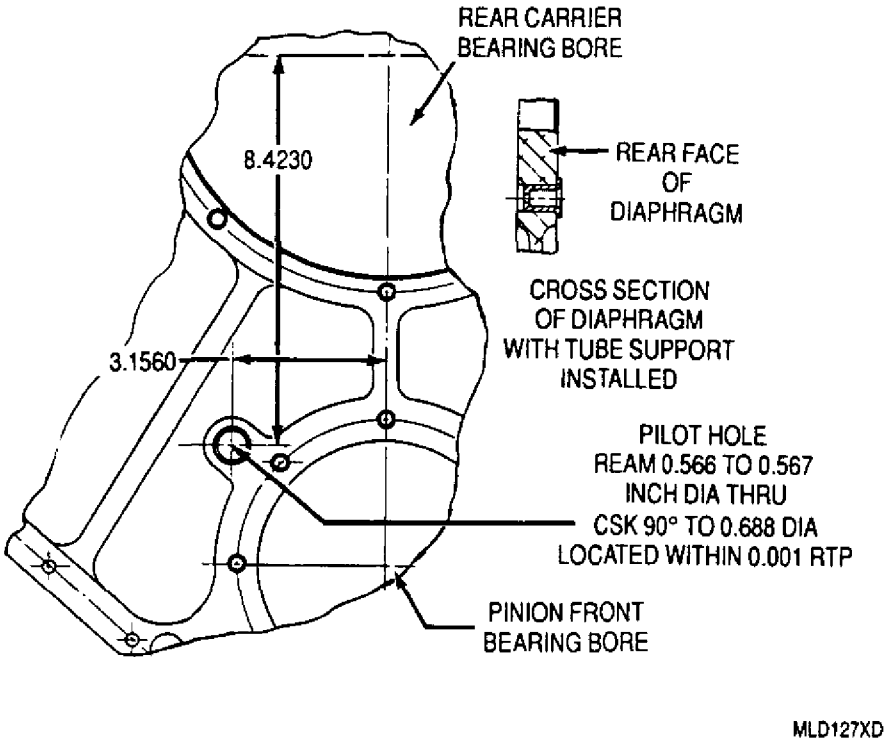

Figure 2. Pinion Gear Oil Jet Tube Pilot Hole − Repair

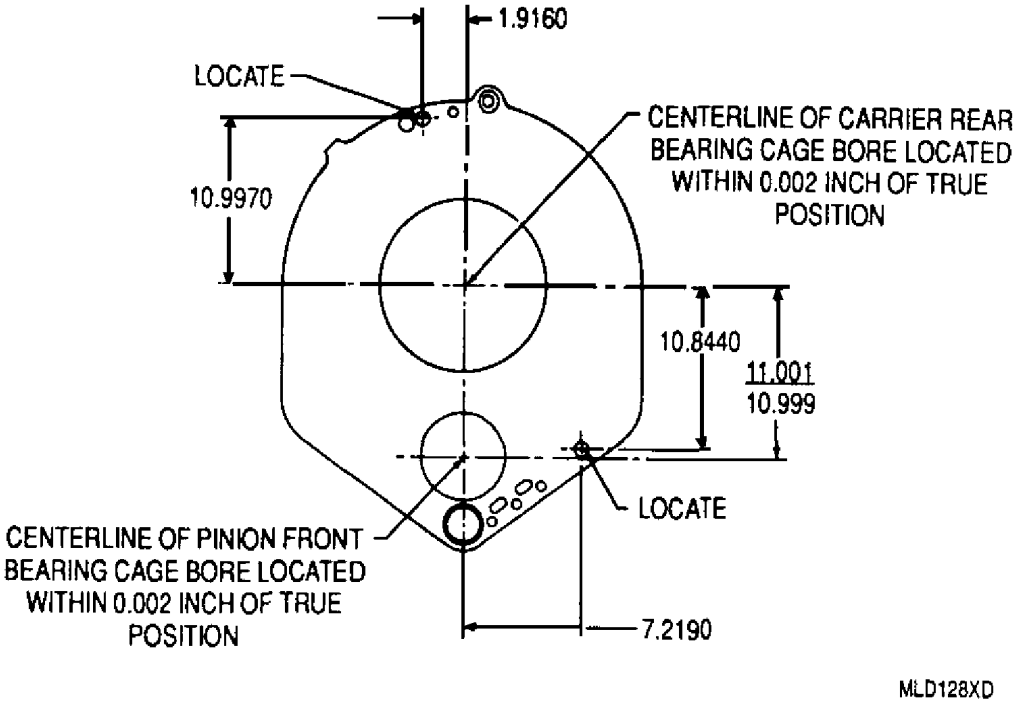

Figure 3. Main Diaphragm Bearing Cage Bore Centerline Locations

Support Equipment Required

Part No./Type Designation	Nomenclature
6798962	Template, locating pinion front and rear carrier bearing cage bores

a. Remove bearing cage from main diaphragm.

b. Select replacement bearing cage to obtain 0.014 − 0.016 in. tight fit. If oversized cage is required, use the following cage installation procedure.

(1) Use 6798962 bearing cage bores locating template to locate centerline of carrier bearing cage bore. For diaphragms that do not have pilot holes, locate the cage bore centerline from the two bolt hole centerlines as shown (figure 3).

(2) Machine Diameter F (figure 4) to obtain the specified fit with the replacement bearing cage.

WARNING

Heated parts will cause skin damage (burns). Use clean insulated gloves to handle parts.

c. Heat diaphragm to 250−300°F (120−150°C), and install cage.

d. Locate cage with key slot at the three o'clock position. Place a keyed segment plate over studs and check alignment of slots.

e. Bearing cage ID shall be 9.0553 − 9.0573 in. as shown (figure 5) after assembly has cooled to room temperature.

9. Pinion Gear Front Bearing Cage − Replacement. This procedure is accomplished with the carrier rear bearing cage removed. If the carrier rear bearing cage requires replacement, it shall be replaced after the pinion gear bearing cage. When the carrier rear bearing cage is installed or replaced first, the tight fit (0.014 − 0.016 in.) of the cage causes a distortion of the diaphragm in its free state. This distortion will cause an out−of−round condition of the pinion gear bearing cage when it is installed.

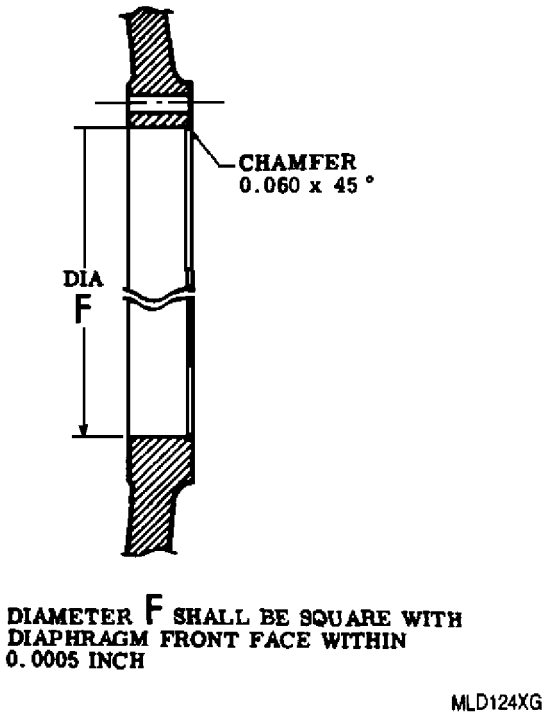

Figure 4. Carrier Rear Bearing Cage Bore Repair Limits

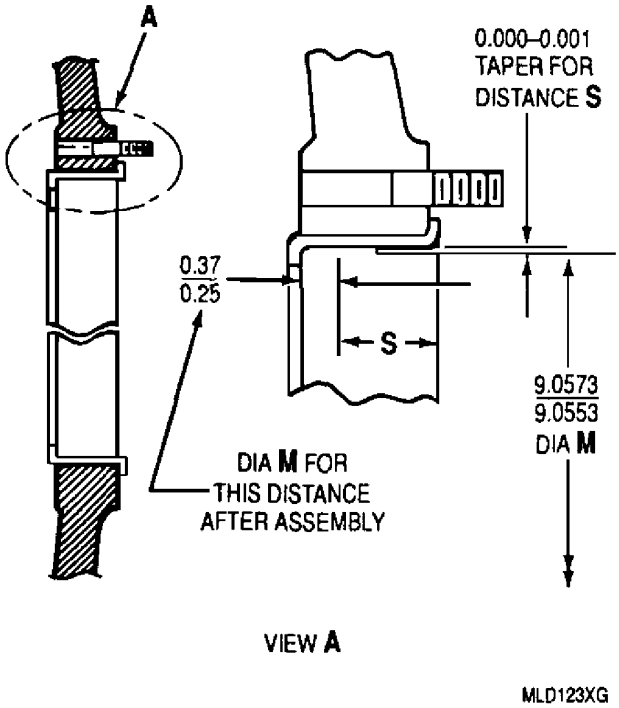

Figure 5. Carrier Rear Bearing Cage − Dimensional Check

Support Equipment Required

Part No./Type Designation	Nomenclature
6798962	Template, locating pinion front and rear carrier bearing cage bores
——	Wrench, torque (0 − 300 lb in.)
——	Gloves, insulated

Materials Required

Specification No./Part No.	Nomenclature
MS21043−5	Nut, self−locking (7)

a. If carrier rear bearing cage is installed, it shall be removed before replacing pinion gear bearing cage.

b. Remove nuts and bearing cage from main diaphragm. Discard nuts.

c. Select replacement bearing cage to obtain a 0.003−0.005 in. tight fit. If an oversized cage is required, use the following cage installation procedure.

(1) Use 6798962 bearing cage bores locating template to locate centerline of pinion bearing cage bore. For diaphragms that do not have pilot holes, locate the cage bore centerline from the two bolt hole centerlines as shown (figure 3).

(2) Machine Diameter E (figure 6) to obtain the specified fit with the replacement bearing cage.

WARNING

Heated parts will cause skin damage (burns). Use clean insulated gloves to handle parts.

d. Heat diaphragm to 250−300°F (120−150°C) and install cage. The flat on cage flange is positioned at bottom to clear oil jet nozzle mounting holes.

e. Bearing cage ID shall be 5.3178 − 5.3193 in. after assembly has cooled to room temperature.

f. Position bearing locking key in key slot of cage.

g. Attach key and cage to diaphragm with drilled hex nuts. Torque nuts 140−170 lb in. (QA)

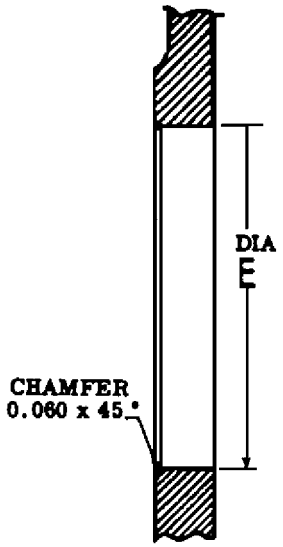

DIAMETER E SHALL BE SQUARE WITH DIAPHRAGM FRONT FACE WITHIN 0.0005 INCH

MLD125XG

Figure 6. Pinion Gear Front Bearing Cage Bore Repair Limits

10. Bearing Bore Alignment Check.

CAUTION

Front housing, main diaphragm, inner diaphragm, and rear housing are bore aligned as a set. Do not intermix other parts once bore alignment has been accomplished.

NOTE

Bore alignment is calculated with cages installed. If check is done without cages, subtract 0.0005 in. to determine limits without cages.

a. Front housing nose bearing cage shall be concentric to main diaphragm rear carrier bearing cage bore within 0.008 in. FIR. Main diaphragm bearing cage bore shall be used as reference bore.

b. Main diaphragm front pinion bearing cage bore shall be concentric to rear housing rear pinion bearing cage bore within 0.006 in. FIR. Main diaphragm bearing cage bore shall be used as reference bore.

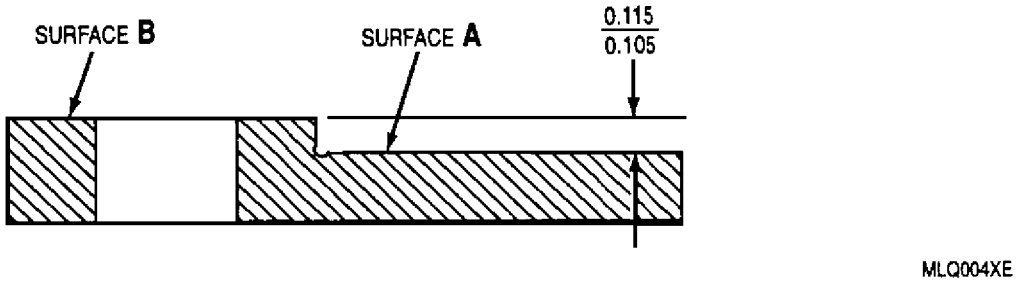

Figure 7. Carrier Rear Bearing Retaining Segment Plate Repair

Table 2. Carrier Rear Bearing Retaining Segment Plates and Keyed Segment Plate − Inspection and Repair

Condition	Serviceable Limits	Repairable Limits	Disposition
Wear or scoring on surface A (figure 7).	Less than 0.002 in. as measured from adjacent unworn area.	Exceeds serviceable limits.	Chrome plate retaining segment plate. Refer to paragraph 14, this WP.
Key slot wear.	0.503 in. max allowable slot width.	Not repairable.	Condemn keyed segment plate exceeding serviceable limits.

11. **CARRIER REAR BEARING RETAINING SEGMENT PLATES AND KEYED SEGMENT PLATE.**

12. CARRIER REAR BEARING RETAINING SEGMENT PLATES AND KEYED SEGMENT PLATE − INSPECTION.

a. Inspect carrier rear bearing retaining segment plates and keyed segment plate. Refer to table 2.

13. CARRIER REAR BEARING RETAINING SEGMENT PLATES AND KEYED SEGMENT PLATE − REPAIR.

a. Repair carrier rear bearing retaining segment plates and keyed segment plate. Refer to Disposition column, table 2.

b. Replace segment plates not within serviceable limits after repair.

14. CARRIER REAR BEARING RETAINING SEGMENT PLATE − CHROME PLATE REPAIR.

a. Machine Surface A (figure 7) to remove wear or scoring. Keep material removal to a minimum. Lip thickness (Surface A to front of segment) shall not be less than 0.082 in.

b. Machine Surface B to obtain a 0.105 − 0.115 in. step dimension.

c. When impossible to remove defects on Surface A by machining per step a, process as follows:

(1) Remove defects by machining. Do not decrease lip thickness (Surface A to front of segment) to less than 0.068 in.

(2) Stress relieve at 400°F (204°C) for five hours.

(3) Chrome plate Surface A per WP 018 00 to obtain a finished plating thickness of 0.001 − 0.005 in. Stress relieve at 400°F (204°C) for five hours.

(4) Finish grind to obtain a 32 RMS surface finish. Maximum plating thickness shall not exceed 0.005 in.

(5) Machine Surface B to obtain a 0.105 − 0.115 in. step dimension.

DEPOT MAINTENANCE

PAINTING

REDUCTION GEAR FRONT HOUSING ASSEMBLY
REDUCTION GEAR REAR HOUSING ASSEMBLY
MAIN DIAPHRAGM ASSEMBLY

Reference Material

None

Alphabetical Index

Subject **Page No.**

Introduction 2
Reduction Gear Front and Rear Housing Assemblies and Main Diaphragm Assembly 2
Painting (Respray) Procedure 2
Touch−Up Painting Procedure 5

Record of Applicable Technical Directives

None

1. **INTRODUCTION.**

2. This work package (WP) provides the instructions for restoring the paint on the reduction gear front and rear housing assemblies and main diaphragm assembly. The housings and diaphragm assemblies are painted with the bearing cages, studs, and dowel pins installed.

3. **REDUCTION GEAR FRONT AND REAR HOUSING ASSEMBLIES AND MAIN DIAPHRAGM ASSEMBLY.**

4. PAINTING (RESPRAY) PROCEDURE. The existing paint should not be stripped unless the coating has deteriorated and is no longer an effective protection against corrosion.

Support Equipment Required

Part No./Type Designation	Nomenclature
——	Gloves, insulated

Materials Required

Specification No./Part No.	Nomenclature
H−251	Thinner, Actithane
MIL−PRF−680, type II	Solvent, dry cleaning
WC 100	Actithane paint
A−215 or 608	Paint Stripper, CEE BEE Paint Remover, Turco Transpo

Dry Cleaning Solvent MIL−PRF−680, Type II **3**

a. Vapor degrease housings and diaphragms to remove oil, grease, and other foreign material using MIL−PRF−680, type II dry cleaning solvent.

b. Immerse housings and diaphragm in either a solution of CEE BEE A−215 paint stripper for 25−35 minutes or in Turco Transpo 608 paint remover until softening and wrinkling of the paint is evident.

c. When Turco Transpo 608 paint remover is used, rinse and dry as follows:

(1) Rinse parts in cold water and then in hot water (120°F (49°C) minimum) to remove loose paint film.

Compressed Air **56**

(2) Dry parts completely using filtered compressed air.

d. When CEE BEE A−215 paint stripper is used, rinse and dry as follows:

(1) Soak parts in a water and detergent solution.

(2) Rinse parts with pressure water to remove loose paint and water/detergent solution.

(3) Dry parts completely using filtered compressed air.

e. Mask housings and diaphragms for painting as follows:

(1) Mask front housing no paint (NP) areas (figure 1).

(2) Mask rear housing NP areas (figure 2).

(3) Mask diaphragm front and rear areas completely leaving only the external area (to be painted) exposed.

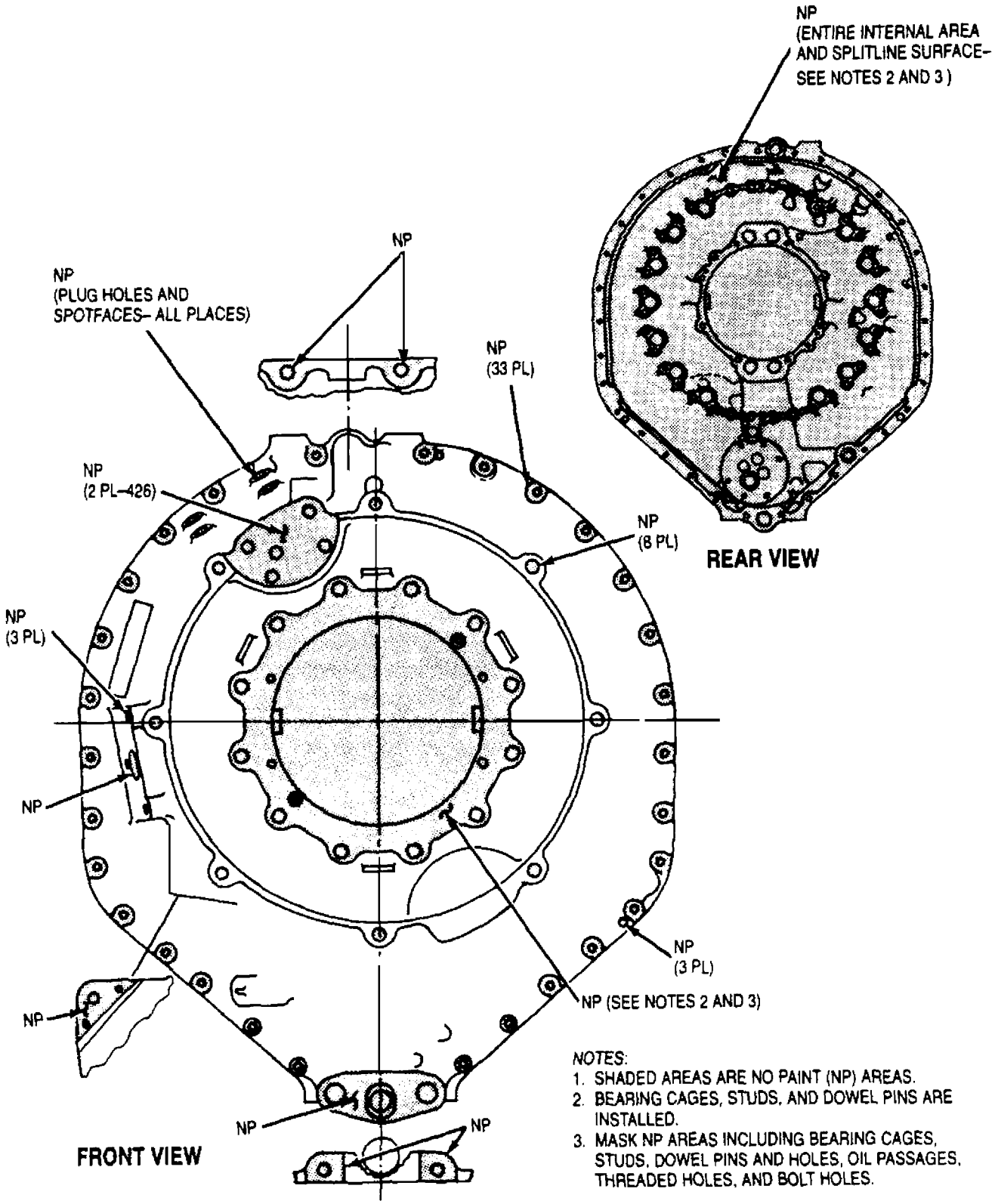

Figure 1. Reduction Gear Front Housing Assembly − No Paint Areas

MLD161XA

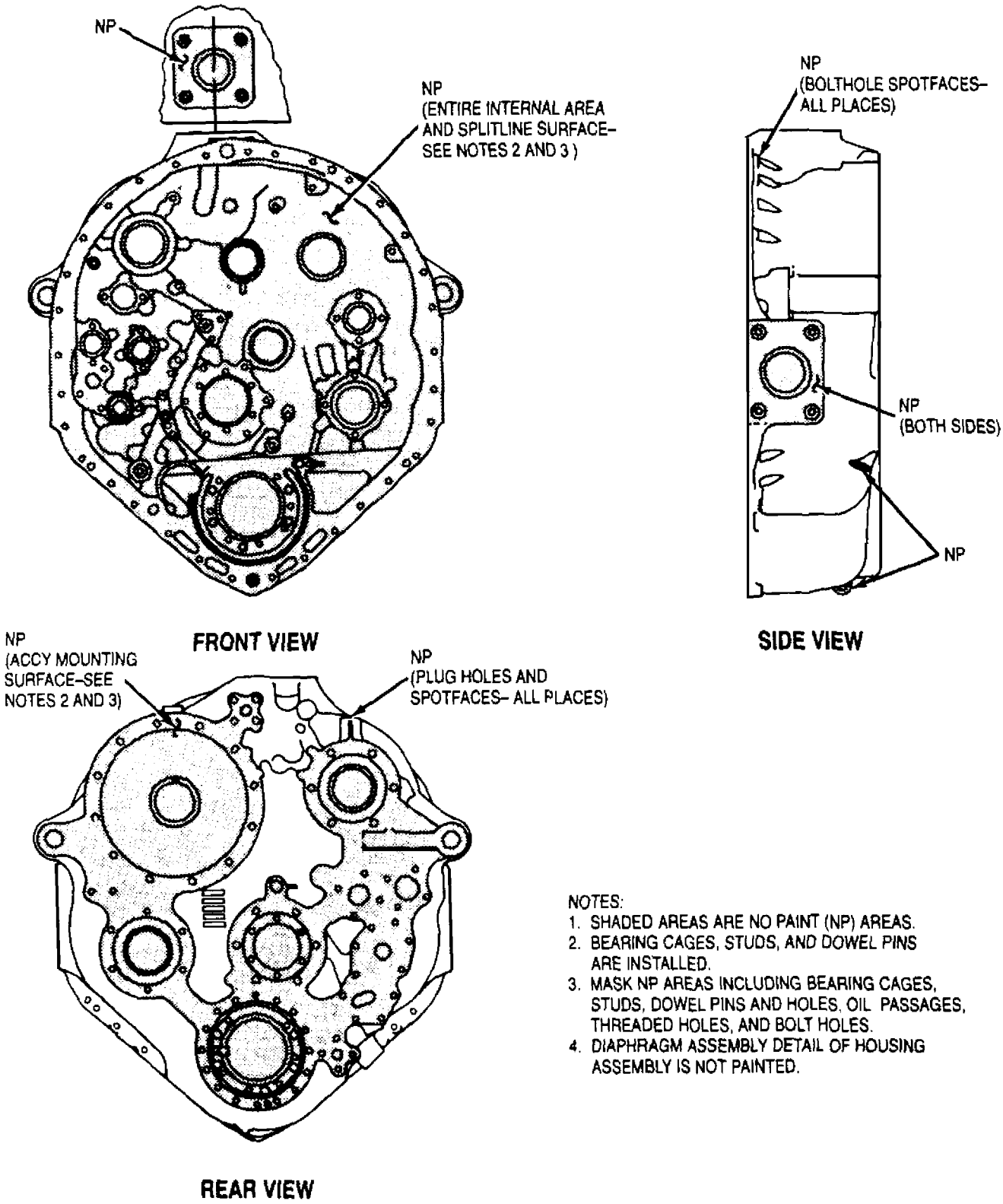

NOTES:
1. SHADED AREAS ARE NO PAINT (NP) AREAS.
2. BEARING CAGES, STUDS, AND DOWEL PINS ARE INSTALLED.
3. MASK NP AREAS INCLUDING BEARING CAGES, STUDS, DOWEL PINS AND HOLES, OIL PASSAGES, THREADED HOLES, AND BOLT HOLES.
4. DIAPHRAGM ASSEMBLY DETAIL OF HOUSING ASSEMBLY IS NOT PAINTED.

Figure 2. Reduction Gear Rear Housing Assembly − No Paint Areas

MLD162XA

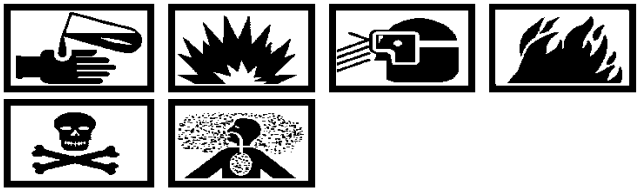

Actithane Paint WC 100 **11**

NOTE

WC−100 paint mixture has an approximate eight hour pot life at room temperature. The pot life may be extended by keeping container tightly covered and stored in a refrigerator.

f. Mix three parts WC−100 base paint by volume with one part activator by volume. Thoroughly blend mixture and allow to age for at least 15 minutes before using.

NOTE

Paint curing should be in an electrically heated oven. Exposure of this paint to combustion products present in a gas fired oven tend to discolor the paint film.

g. Spray housings and diaphragms with two coats of paint to obtain 0.002 − 0.005 in. final thickness as follows:

Paint Thinner Actithane H 251 **42**

(1) Wipe surfaces to be painted using clean cloth dampened with H−251 thinner.

(2) Spray first coat and air dry 15 minutes.

WARNING

Heated parts will cause skin damage (burns). Use clean insulated gloves to handle parts.

(3) Bake first coat at 150−175°F (66−74°C) for ten minutes. Remove part from oven and allow to cool to room temperature before applying second coat.

(4) Spray second coat and air dry 15 minutes.

(5) Bake second coat 290−310°F (143−154°C) for 20 minutes. Remove part from oven and allow to cool to room temperature.

h. Remove masks and inspect finished paint coating. Coating shall be continuous, uniform, and free of bubbles, pinholes, runs, sags, or other imperfections.

i. Incomplete coverage caused by overlapping masks or abrasion damage caused by handling (not by loss of adhesion as covered in this paragraph) may be repaired by touch−up painting. Refer to paragraph 5, this WP.

5. TOUCH−UP PAINTING PROCEDURE.

Materials Required

Specification No./Part No.	Nomenclature
A−A−1049	Cloth, emery
H−251	Thinner, Actithane
MIL−M−3171, Type III	Solution, chrome pickle
WC 100	Actithane Paint

a. Abrade bare and surrounding surfaces using A−A−1049 emery cloth.

Magnesium Treatment (Chrome Pickle)
MIL−M−3171, Type III (Dow 19) **13**

b. When base metal is exposed, treat area with MIL−M−3171, Type III chrome pickle solution.

c. Wipe areas to be painted using clean cloth dampened with H−251 thinner.

d. Prepare WC−100 paint mixture. Refer to paragraph 4, this WP.

e. Brush or spray paint prepared surfaces. It is permissible to apply one coat provided final thickness requirement (0.002−0.005 in.) is met. Allow paint to air dry 15 minutes.

f. Oven cure paint. Refer to paragraph 4, this WP.

g. Inspect paint film for imperfections. Refer to paragraph 4, this WP.

DEPOT MAINTENANCE

MAINTENANCE

CONE TYPE PROPELLER BRAKE ASSEMBLY

Reference Material

General Inspection, Repair, and Replacement − Procedures . . . . . WP 009 00
Magnetic Particle and Fluorescent Penetrant Inspection − Procedures . . . . . WP 017 00
Plating and Surface Treatment of Parts . . . . . WP 018 00
Internal and External Spline − Repair . . . . . WP 047 00
Anti−friction Bearings − Maintenance . . . . . WP 138 00
Maintenance . . . . . NAVAIR 02B−5DG−6−1
Assembly and Disassembly, Standard Practices . . . . . WP 016 00
Plating, Nickel, Electroless, Low Phosphorus . . . . . AMS 2405
Plating, Chromium, Hard Deposit . . . . . AMS 2406
Aerospace Standard Identification Marking Methods . . . . . AS 478

Alphabetical Index

Subject **Page No.**

Cone Type Propeller Brake Assembly 3
Assembly for Bench Test 21
Balance Propeller Brake Assembly Assembly for Dynamic Balance 19
Balance Propeller Brake Assembly Disassembly 3
Balance Propeller Brake Assembly Dynamic Balance 18
Bearing Inspection 5
Bench Test 22
Cleaning 4
Disassembly 3
Inner Propeller Brake Cone Grinding 17
Inner Propeller Brake Cone Inspection 15

Alphabetical Index (contd)

Subject **Page No.**

Inner Propeller Brake Cone Repair 15
Matched Set Component Description 3
Outer Member Assembly Facing (Lining) Replacement 5
Outer Member Assembly Inspection 5
Outer Member Assembly Repair 5
Starter Shaft Assembly Inspection 11
Starter Shaft Assembly Repair 11
Starter Shaft Bearing Flange Inspection 14
Starter Shaft Bearing Flange Repair 14
Starter Shaft Internal Spline Inspection 13
Starter Shaft Plug Transfer Tube Bore Repair 12
Starter Spur Gear Inspection 13
Starter Spur Gear Rear Face Repair 14
Starter Spur Gear Repair 13

Record of Applicable Technical Directives

None

1. **CONE TYPE PROPELLER BRAKE ASSEMBLY.**

2. MATCHED SET COMPONENT DESCRIPTION. Two components of the cone type propeller brake assembly are matched sets. The detail parts of these sets shall not be intermixed between like sets. When a detail part of a set is not serviceable it shall be replaced by a new part. The matched sets are as follows:

a. Four detail parts of the balance propeller brake assembly (detail of cone type propeller brake assembly) are a matched set identified by a Set serial number. The serial number is located on each detail part as follows:

- Starter shaft assembly (excluding plug) − On the shaft flange rear face
- Starter spur gear − On the gear outer front face
- Propeller brake outer member assembly − On the gear flange front face
- Propeller brake apply spring − On the spring rear face

b. Three other detail parts of the cone type propeller brake assembly also are a matched set identified by a Set serial number. The serial number is located on each detail part as follows:

- Starter shaft bearing flange − On the flange front face outboard of bolthole circle
- Inner propeller brake cone − On the cone web rear face
- Propeller brake release spring − On the spring front face

3. CONE TYPE PROPELLER BRAKE ASSEMBLY − DISASSEMBLY. (figure 1)

CAUTION

Bearings are matched sets, do not intermix details between sets.

The release spring, inner propeller brake cone, and starter shaft bearing flange are a matched set. Keep set together by serial number.

NOTE

Items 1 through 5, figure 1 may be received disassembled, if not complete disassembly follows:

a. Remove assembled starter shaft bearing flange (5, figure 1) and inner propeller brake cone (inner cone) (3) from balance propeller brake assembly and disassemble as follows:

(1) Remove external retaining ring (1) using a thin−blade screwdriver.

(2) Remove release spring (2).

(3) Remove inner cone (3) from bearing flange (5).

(4) Remove outer ring of rear bearing (4) from bearing flange. Keep outer ring and inner ring and rollers together as matched set.

(5) Keep bearing flange, inner cone, and release spring together as matched sets.

b. Remove inner ring and rollers of rear bearing (4) from starter shaft (10). Keep inner ring and rollers and outer ring together as matched set.

c. Remove front bearing (6) and split external retaining ring (7) from starter shaft. Keep front bearing details together as matched set.

4. CONE TYPE PROPELLER BRAKE ASSEMBLY − BALANCE PROPELLER BRAKE ASSEMBLY DISASSEMBLY. (figure 1)

Support Equipment Required

Part No./Type Designation	Nomenclature
23034309	Holder, outer member
6799536	Wrench, outer member retainer nut (splines)

CAUTION

The apply spring, starter shaft, outer member assembly, and starter spur gear are a matched set. Keep set together by serial number.

NOTE

Items 8 through 19 makeup the balance propeller brake assembly.

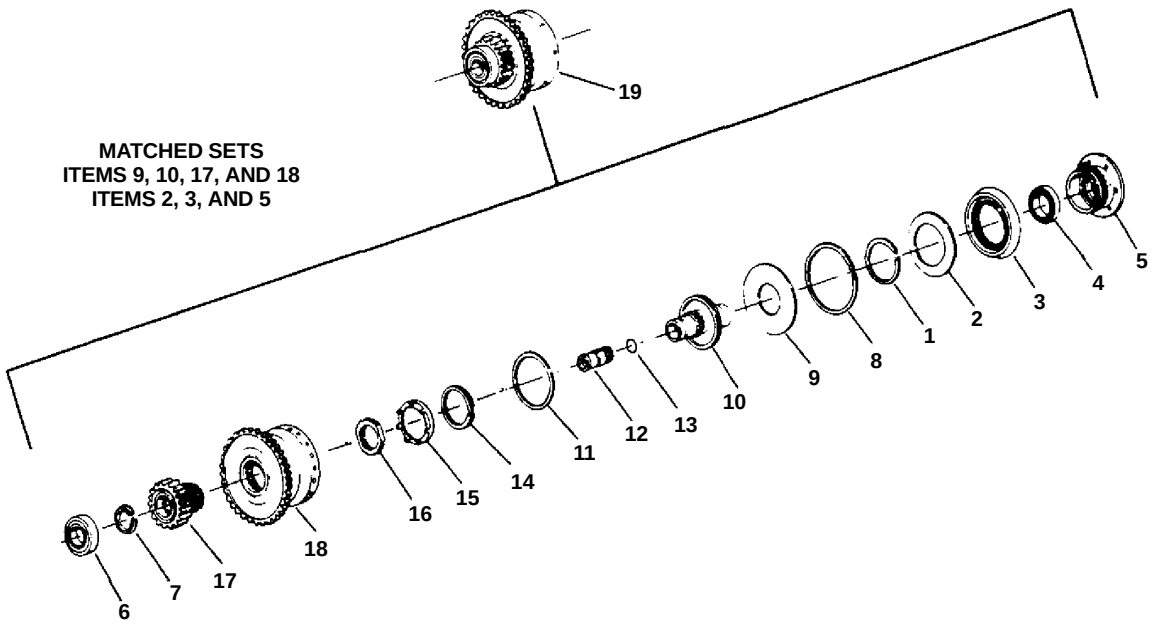

1. External Retaining Ring
2. Release Spring
3. Inner Propeller Brake Cone
4. Roller Bearing
5. Starter Shaft Bearing Flange
6. Roller Bearing
7. Split External Retaining Ring
8. Internal Retaining Ring
9. Apply Spring
10. Starter Shaft
11. Propeller Brake Seal
12. Starter Shaft Plug
13. Preformed Packing
14. Internal Retaining Ring
15. internal Spline Lock Ring
16. Spanner Nut
17. Starter Spur Gear
18. Outer Member Assembly
19. Cone Type Propeller Brake Assy

Figure 1. Propeller Brake Assembly Details

a. Remove internal retaining ring (8) and apply spring (9).

b. Remove starter shaft (10). Remove seal (11) from shaft. Discard seal.

c. Remove plug (12) and preformed packing (13) from ID of starter shaft. Discard packing.

d. Remove internal retaining ring (14) and internal spline lock ring (15).

e. Remove spanner nut (16) using 23034309 holder and 6799536 wrench (figure 2).

f. Remove starter spur gear (17) from outer member assembly (18).

g. Keep outer member assembly, starter spur gear, starter shaft, and apply spring together as matched set.

5. CONE TYPE PROPELLER BRAKE ASSEMBLY − CLEANING.

Materials Required

Specification No./Part No.	Nomenclature
MIL−PRF−680, Type II	Solvent, dry cleaning

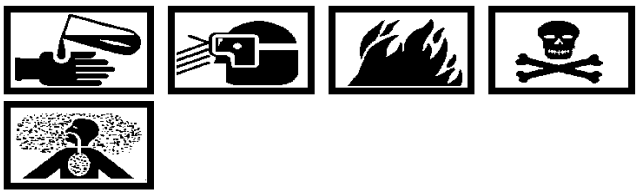

Dry Cleaning Solvent
MIL−PRF−680, Type II **3**

a. Clean all parts using MIL−PRF−680, Type II dry cleaning solvent. Use wash or spray method.

b. Allow parts to air dry.

6. CONE TYPE PROPELLER BRAKE ASSEMBLY − BEARING INSPECTION. Inspect bearings. Refer to WP 138 00.

7. CONE TYPE PROPELLER BRAKE ASSEMBLY − OUTER MEMBER ASSEMBLY INSPECTION.

a. Inspect propeller brake outer member assembly. Refer to table 1.

b. Refer to WP 017 00 for magnetic particle inspection (MPI) procedures.

8. CONE TYPE PROPELLER BRAKE ASSEMBLY − OUTER MEMBER ASSEMBLY REPAIR.

a. Repair propeller brake outer member assembly. Refer to Disposition column, table 1.

b. Replace assemblies not within serviceable limits after repair.

9. CONE TYPE PROPELLER BRAKE ASSEMBLY − OUTER MEMBER ASSEMBLY FACING (LINING) REPLACEMENT.

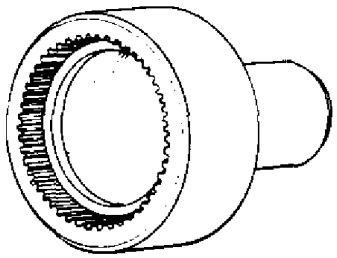

ZZT354XJ

Figure 2. 6799536 Retainer Nut Wrench

Support Equipment Required

Part No./Type Designation	Nomenclature
23034309	Fixture, facing grooving holding
23034359	Fixture, facing boring
23034372	Gage, facing ID plug
6796371	Gage, facing rivet countersink depth
6796372	Gage, facing rivet head depth
6796373	Gage, facing trim
6796377	Gage, facing groove depth
6796378	Gage, facing bore concentricity and angle
6796380	Fixture, drill
6796441	Drill, facing rivet hole special
6796739	Gage, facing spacing
6796740	Gage, facing groove width

Materials Required

Specification No./Part No.	Nomenclature
MS20427−3C5	Rivet (24)
MIL−PRF−680, Type II	Solvent, dry cleaning
23039657	Facing (1)

a. Remove existing facing (lining) by drilling out rivets attaching lining to outer member. Rivet shank diameter is 0.096−0.098 in. (figure 4).

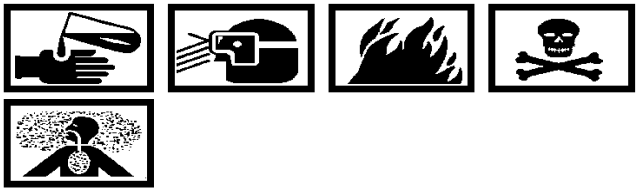

Dry Cleaning Solvent
MIL−PRF−680, Type II **3**

b. Clean outer member, new lining, and new rivets in MIL−PRF−680, Type II dry cleaning solvent and air dry.

c. Locate replacement lining in outer member and drill rivet holes (figure 4) as follows:

(1) Install lining into outer member with centerline of joint gap at true center between any two existing rivet holes in outer member. This will locate joint gap within a slot when slots are machined.

Table 1. Propeller Brake Outer Member Assembly − Inspection and Repair

Condition	Serviceable Limits	Repairable Limits	Disposition
MPI indications or nonmetallic inclusions.	Indications which are light, scattered and parallel to material flow lines. No fatigue type progression is evident.	Not repairable.	Condemn outer member having the following: a. Indications extending into root corners of spline teeth. b. Open indications breaking into slots or holes and showing appreciable depth.
Brake facing wear (figure 3).	Dimension W shall not be less than 1.885 in. to gage Diameter C of 4.880 in.	Not repairable.	Replace facing. Refer to paragraph 9, this WP.
Warpage or bending of outer member gear.	Surface A parallel with Surface B within 0.015 in. FIR.	Not repairable.	Condemn outer member exceeding serviceable limits.
Wear or scoring on 4.201−4.199 in. inside diameter (figure 3).	Scratches and surface imperfections less than 0.0005 in. in depth may be polished to a 16 RMS finish or better.	Max wear or scoring to 4.221 in. inside diameter.	Machine ID to remove wear or scoring. Do not exceed 4.221 in. Chrome plate per AMS 2406 or electroless nickel plate per AMS 2405 and bake at 300−325° F (150−163°C) for five hours. Restore to figure 4 requirements.
Diameter C oversize or out of round (figure 3).	5.040 in. max at Diameter C with 0.001 in. out of round.	5.030 in. max at Diameter C with 0.005 in. out of round.	Machine at 10 degrees, 0 minutes, ± 7 minutes to round up. Do not exceed 5.040 in. at Diameter C.
Internal spline wear. Refer to WP 047 00.	Maximum gage reading of 0.002 in. without sharp steps.	Not repairable.	Condemn outer member exceeding serviceable limits.

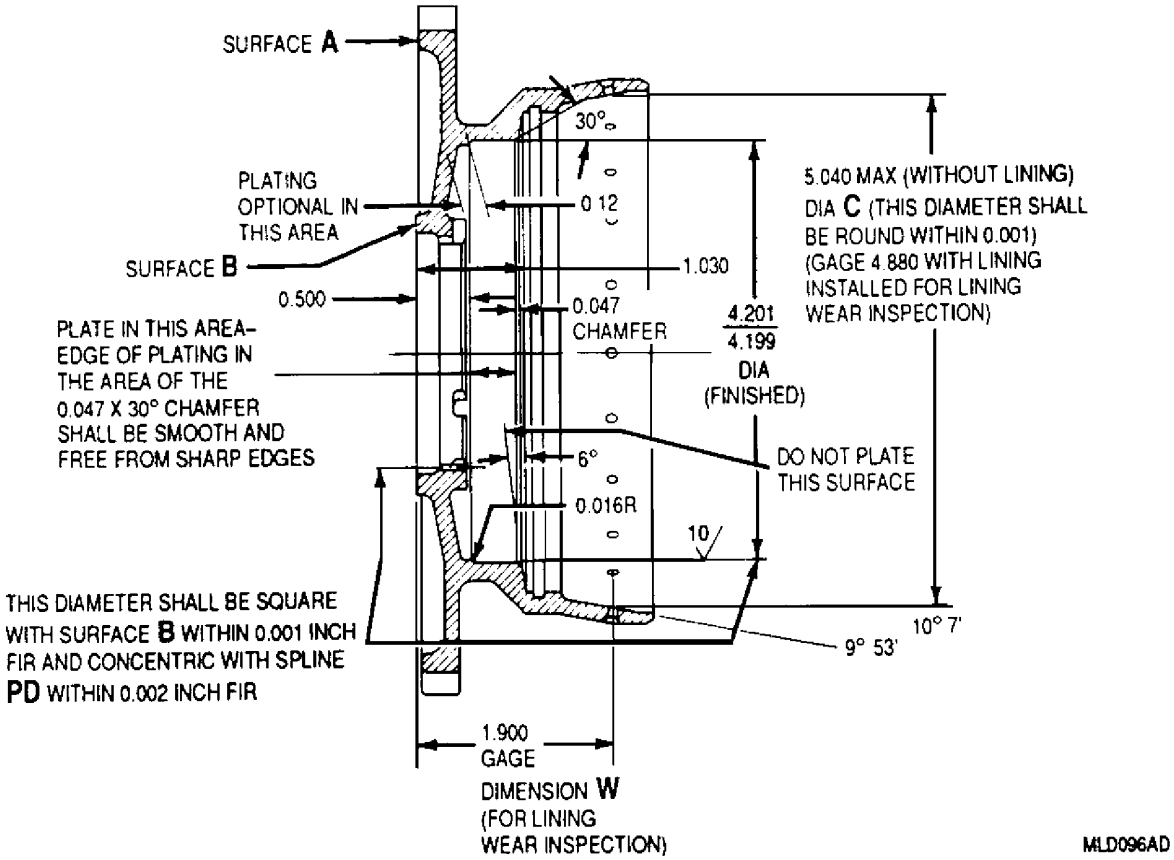

Figure 3. Propeller Brake Outer Member−Chrome Plate Diameter

(2) Install assembly in 6796380 drill fixture (figure 5) and drill 0.096 − 0.098 in. Diameter rivet holes in line with rivet holes in outer member.

NOTE

The special drill counterbores and countersinks the rivet holes in one operation.

(3) Counterbore (and countersink) rivet holes in lining using 6796441 special drill (figure 6) to depth of 0.025 − 0.035 in.

(4) Remove assembly from fixture.

d. Check counterbore/countersink depth using 6796371 gage as shown (figure 7).

e. Install rivets using standard shop practice. Facing gap (space between lining and member surfaces) shall not exceed 0.002 in.

f. Install assembly in 23034359 machining fixture as shown (figure 8).

g. Finish grind gage Diameter D and Diameter C using a HEALD internal grinder or equivalent, to dimensions, circular runout, and surface finishes shown (figure 4).

h. Remove assembly from machining fixture and check (figure 4) the following:

(1) Check rivet head minimum depth using 6796372 gage as shown (figure 9).

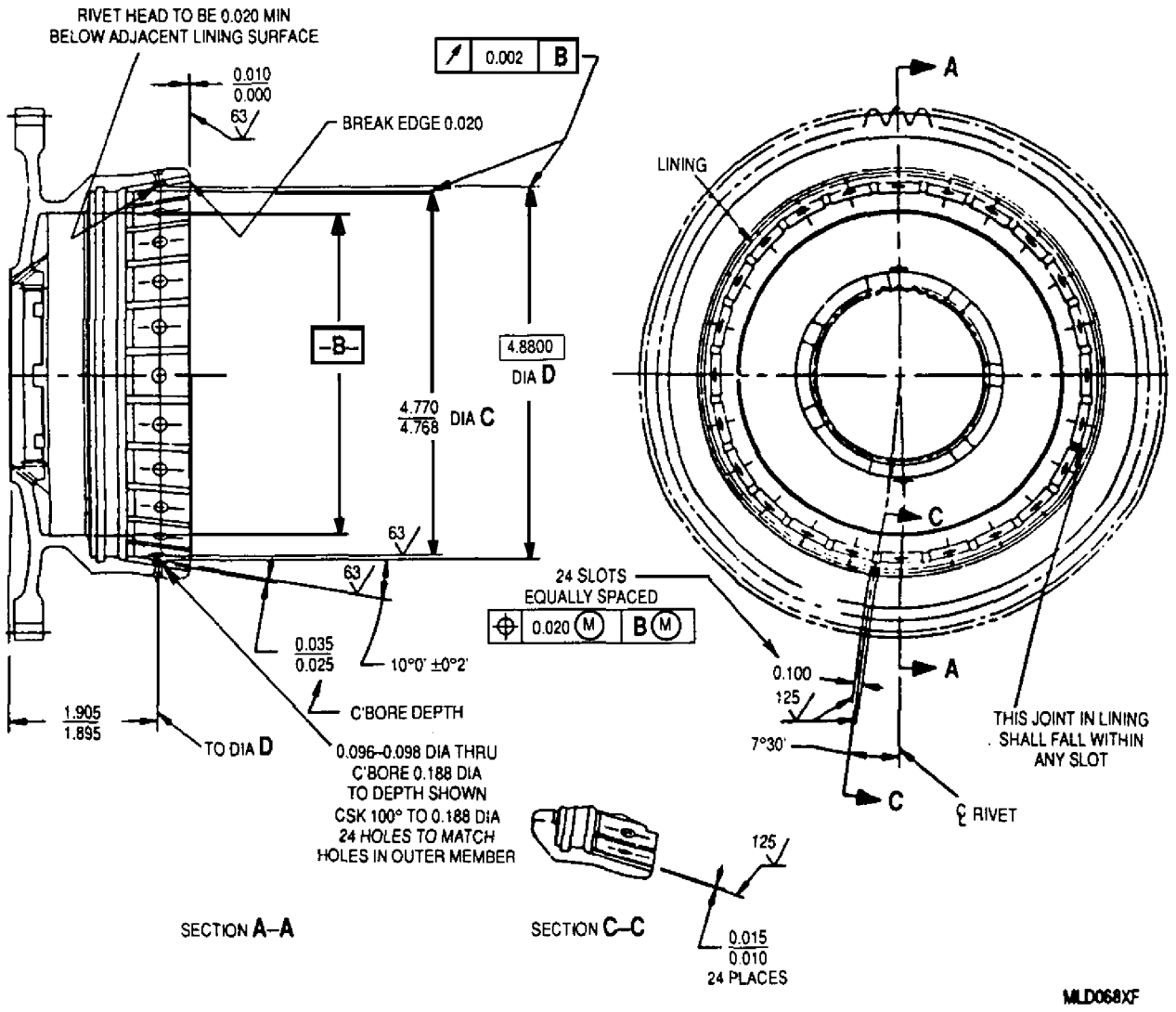

Figure 4. Propeller Brake Outer Member Assembly − Lining Replacement

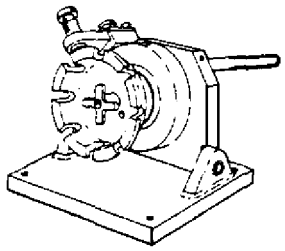

ZZT347XJ

Figure 5. 6796380 Drill Fixture

ZZT348XJ

Figure 6. 6796441 Facing Rivet Hole Special Drill

(2) Check gage Diameter D using 23034372 gage as shown (figure 10).

(3) Check Diameter C and gage Diameter D runout and angle using 6796378 gage as shown (figure 11).

i. Trim rear face of lining flush to 0.010 in. above rear face of outer member. Check using 6796373 gage as shown (figure 12).

j. Machine 24 slots in lining angularly located and equally spaced (figure 4) as follows:

(1) Install assembly in 23034309 holding fixture as shown (figure 13).

(2) Locate and machine slots to dimensions and surface finish shown.

(3) Check slot positions using 6796739 gage (figure 14).

(4) Check slot depth and width using 6796377 and 6796740 gages (figures 15 and 16).

k. Break slot sharp edges 0.010 in. and edges of lining between slots 0.020 in. (figure 4).

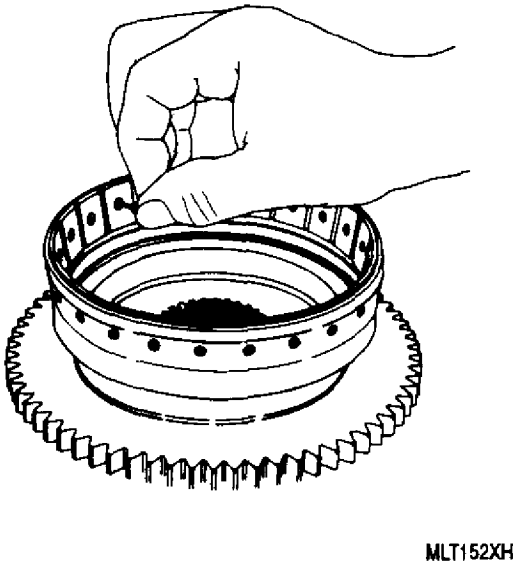

Figure 7. Checking Facing Rivet Holes Countersink Depth with 6796371 Gage

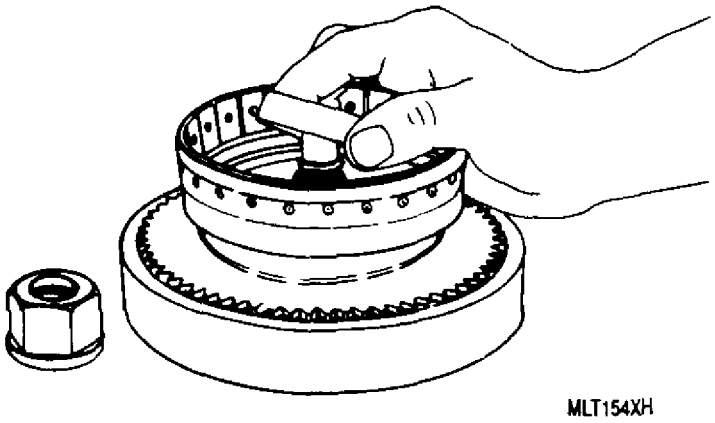

Figure 8. Installing Propeller Brake Outer Member in 23034359 Face Boring Fixture

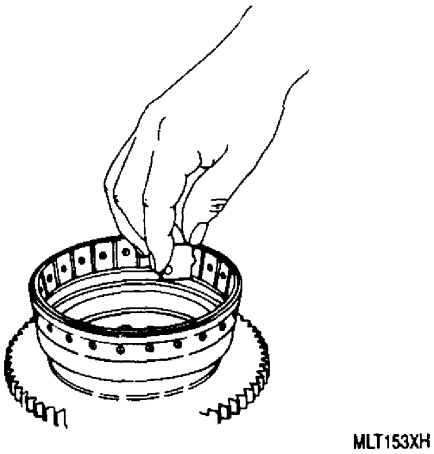

Figure 9. Checking Depth of Facing Rivet Head with 6796372 Gage

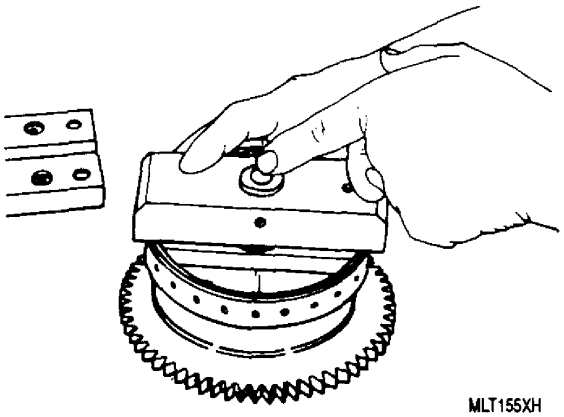

Figure 10. Checking Lining Bore Diameter with 23034372 Gage

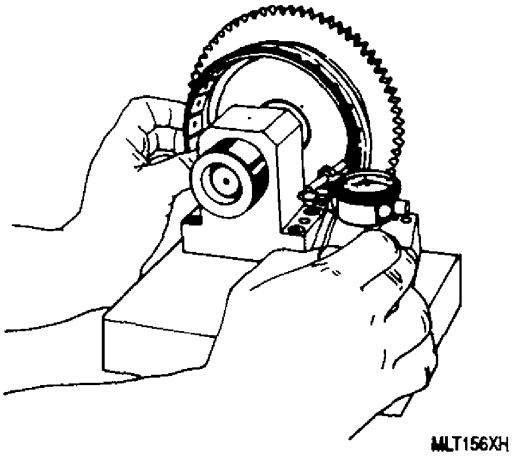

Figure 11. Checking Lining Bore Angle and Concentricity with 6796378 Gage

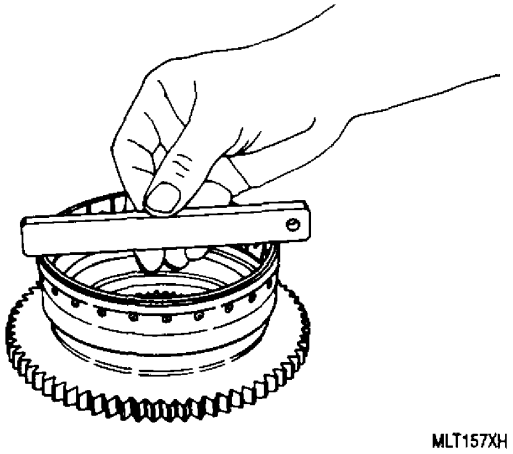

Figure 12. Checking Lining with 6796373 Facing Trim Gage

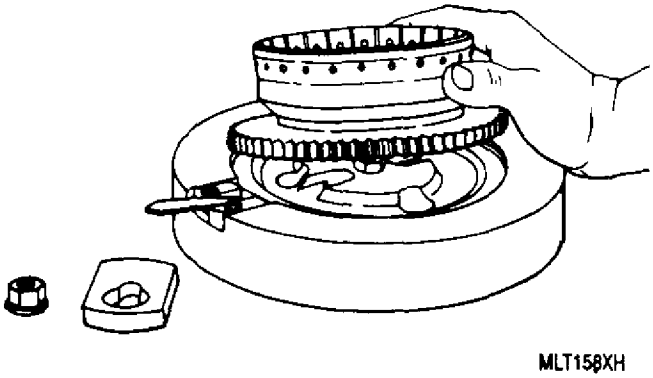

Figure 13. Installing Propeller Brake Outer Member in 23034309 Holding Fixture

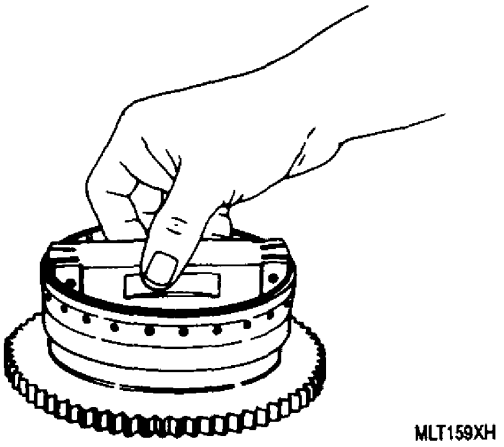

Figure 14. Checking Lining Slot Spacing with 6796739 Gage

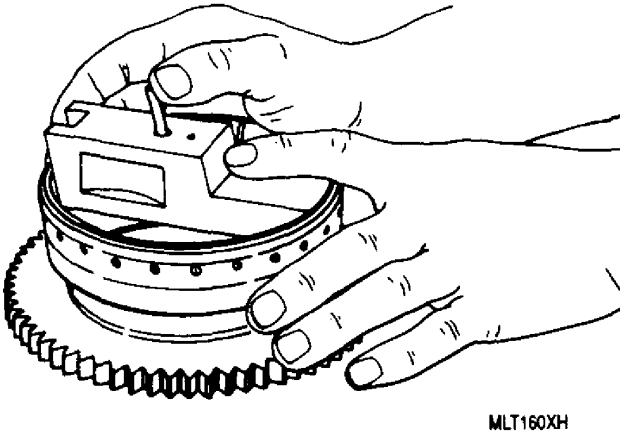

Figure 15. Checking Depth of Outer Member Facing Slots with 6796377 Gage

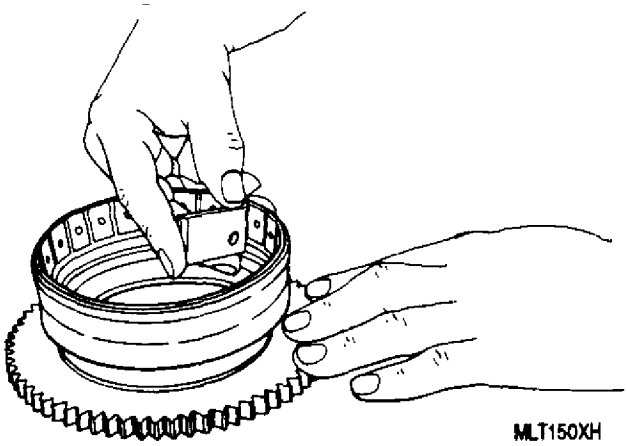

Figure 16. Checking Width of Lining Slots with 6796740 Gage

10. CONE TYPE PROPELLER BRAKE ASSEMBLY − STARTER SHAFT ASSEMBLY INSPECTION.

a. Inspect starter shaft assembly. Refer to table 2.

b. Refer to WP 017 00 for magnetic particle inspection (MPI) procedures.

11. CONE TYPE PROPELLER BRAKE ASSEMBLY − STARTER SHAFT ASSEMBLY REPAIR.

a. Repair starter shaft assembly. Refer to Disposition column, table 2.

b. Replace parts not within serviceable limits after repair.

Table 2. Starter Shaft Assembly − Inspection and Repair

Condition	Serviceable Limits	Repairable Limits	Disposition
MPI indications or non-metallic inclusions.	Indications which are light, scattered and parallel to material flow lines. No fatigue type progression is evident.	Not repairable.	Condemn starter shaft having the following: a. Indications extending into root corners of spline teeth. b. Open indications breaking into slots or holes and showing appreciable depth.
Wear: (figure 17) Scoring, grooves, nicks, gouges, scuffing or minute flats on starter shaft seal journal surfaces. Reference Diameter C.	Evenly polished surface in seal contact area without lead or axial marking.	Damage contributing to oil leakage.	Repair by chrome plating per AMS 2406 to a thickness of 0.0005−0.005 in. Finish grind to limits specified in figure 17.
Retaining ring groove wear.	0.256 in. max width and 1.385 in. max diameter at bottom of groove.	Exceeds serviceable limits.	Repair by chrome plating per AMS 2406. Plating thickness shall not exceed 0.010 in. Finish grind to limits specified in figure 17.
Wear on Diameter A or C.	1.5747 in. minimum.	1.5544 in. minimum.	Repair by chrome plating per AMS 2406. Plating thickness shall not exceed 0.010 in. Finish grind to limits specified in figure 17.
Internal spline wear.	Check spline. Refer to paragraph 13, this WP.	Not repairable.	Condemn shaft exceeding serviceable limits.
External spline wear. Refer to WP 047 00.	Average of four gage readings may not exceed 0.002 in. No single reading may exceed 0.003 in.	Not repairable.	Condemn shaft exceeding serviceable limits.
0.2495−0.2505 in. diameter transfer tube bore in starter shaft plug (figure18).	0.2505 in. maximum.	Any wear exceeding 0.2505 in.	Repair tube bore. Refer to paragraph 12, this WP.
Starter shaft plug Dia A (figure 18).	Fit to starter shaft within limits (Starter shaft plug to shaft 0.002T in. min. and 0.0001L in. max)	Exceeds serviceable limits.	Select brush copper plate lands to size per WP 018 00 or select oversize part to fit.

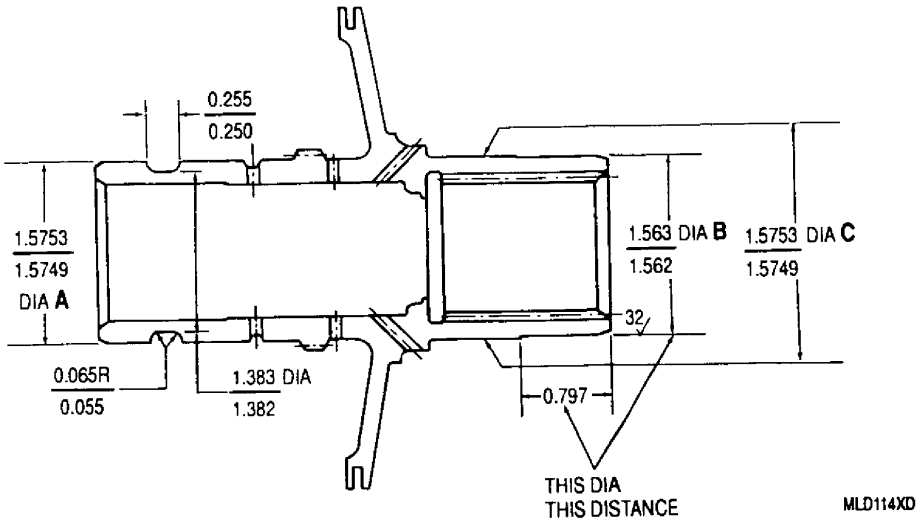

Figure 17. Starter Shaft − Seal Journal Repair

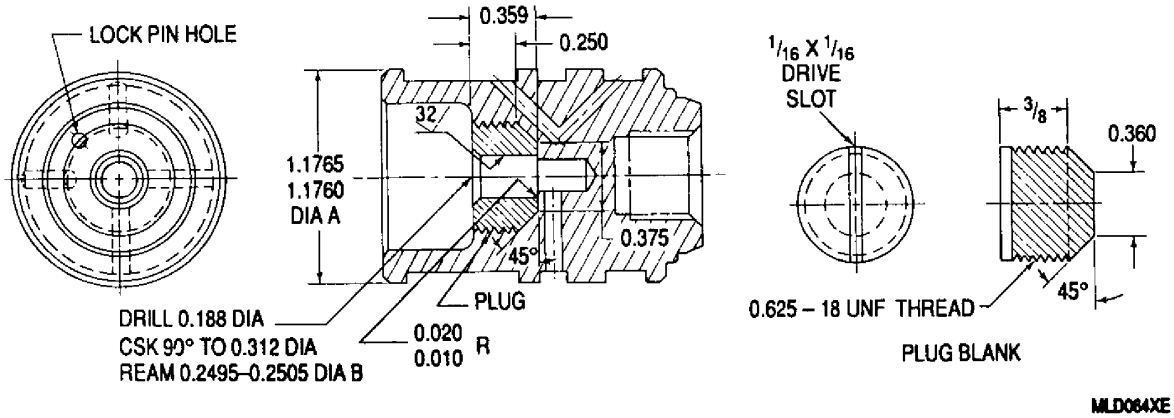

Figure 18. Starter Shaft Plug−Transfer Tube Bore Repair

12. STARTER SHAFT PLUG TRANSFER TUBE BORE REPAIR.

Materials Required

Specification No./Part No.	Nomenclature
MS9486−25	Pin
AMS 4120	Stock, aluminum
——	Sealant, Permatex #1372

a. Rework worn transfer tube bore to dimensions shown for 0.625−18 UNF thread (figure 18).

b. Fabricate a plug blank from AMS 4120 stock to dimensions shown.

c. Coat plug blank threads with 1372 sealant. Install blank until bottomed.

d. Machine plug blank face flush to adjacent surface.

e. Drill 0.0913 − 0.0933 in. Diameter hole 0.219 in. deep located in area shown (provides most stock around pin hole).

f. Drive lock pin into hole until bottomed. Stake edge of hole over slightly.

g. Finish machine bore to dimensions shown. Diameter B shall be concentric to Diameter A within 0.002 in. FIR.

13. CONE TYPE PROPELLER BRAKE ASSEMBLY − STARTER SHAFT INTERNAL SPLINE INSPECTION.

Materials Required

Specification No./Part No.	Nomenclature
6872245	Gage, internal spline

a. Wipe starter drive shaft splines clean.

b. Insert 6872245 gage in a vertical position (figure 19).

c. Apply light pressure onto gage handle in direction of centerline of spline. There should be little if any movement.

d. Excessive wear is indicated if the gage handle reaches or passes through the centerline of the internal spline.

e. Reposition spline gage 90° and repeat inspection procedure.

f. Replace starter shaft if excessive wear is indicated.

14. CONE TYPE PROPELLER BRAKE ASSEMBLY − STARTER SPUR GEAR INSPECTION.

a. Inspect starter spur gear. Refer to table 3.

b. Refer to WP 017 00 for magnetic particle inspection (MPI) procedures.

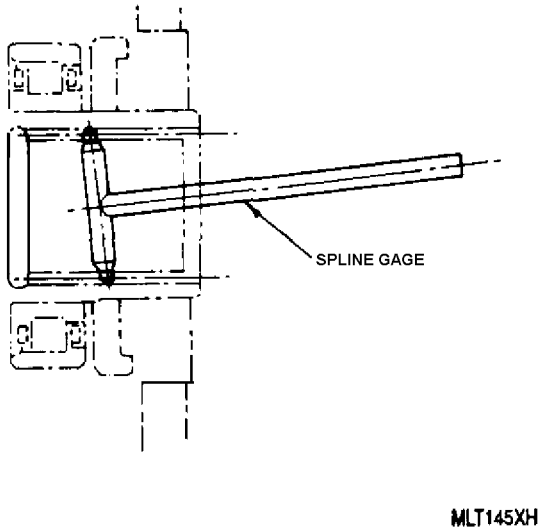

Figure 19. Checking Lining with 6796373 Facing Trim Gage

15. CONE TYPE PROPELLER BRAKE ASSEMBLY − STARTER SPUR GEAR REPAIR.

a. Repair starter spur gear. Refer to Disposition column, table 3.

b. Replace gears not within serviceable limits after repair.

Table 3. Starter Spur Gear − Inspection and Repair

Condition	Serviceable Limits	Repairable Limits	Disposition
GENERAL MPI indications or non-metallic inclusions.	Indications which are light, scattered and parallel to the material flow lines. No fatigue type progression is evident.	Not repairable.	Condemn gear having the following: a. Indications extending into root corners of spline teeth. b. Open indications breaking into slots or holes and showing appreciable depth.
Wear damage to Surface B. (figure 20)	0.673 in. min. gear thickness and no wear.	0.666 in. min. gear thickness.	Repair per paragraph 16, this WP.
External spline. Refer to WP 047 00.	PD at 2.250 in. may have maximum gage reading of 0.002 in. No sharp steps allowed.	Not repairable.	Condemn gear exceeding serviceable limits.
Internal Spline. Refer to WP 047 00.	PD at 1.6875 in. may have maximum gage reading of 0.002 in. No sharp edges allowed.	Not repairable.	Condemn gear exceeding serviceable limits.

16. CONE TYPE PROPELLER BRAKE ASSEMBLY − STARTER SPUR GEAR REAR FACE REPAIR.

a. Remove wear damage from gear Surface B (figure 20) as follows:

(1) Grind Surface B area removing minimum material required to remove damage. Do not reduce gear thickness below 0.673 in. and maintain 63 RMS surface finish.

(2) Gear is serviceable if damage is completely removed. If damage is not removed, chrome−plate repair surface per following step.

b. Chrome−plate repair Surface B as follows:

(1) Grind Surface B area removing minimum material required to remove remaining damage. Do not reduce gear thickness below 0.666 in. and maintain 63 RMS surface finish.

(2) MPI gear. Refer to WP 017 00.

NOTE

All radii and holes shall be free of obstructions after repair.

(3) Chrome plate Surface B area. Refer to WP 018 00.

(4) Finish grind to limits shown maintaining the 63 RMS surface finish. Plate thickness shall not exceed 0.010 in.

(5) MPI gear.

17. CONE TYPE PROPELLER BRAKE ASSEMBLY − STARTER SHAFT BEARING FLANGE INSPECTION.

a. Inspect starter shaft bearing flange. Refer to table 4.

b. Refer to WP 017 00 for magnetic particle inspection (MPI) procedure.

18. CONE TYPE PROPELLER BRAKE ASSEMBLY − STARTER SHAFT BEARING FLANGE REPAIR.

a. Repair starter shaft flange. Refer to Disposition column, table 4 and figure 21.

b. Replace flanges not within serviceable limits after repair.

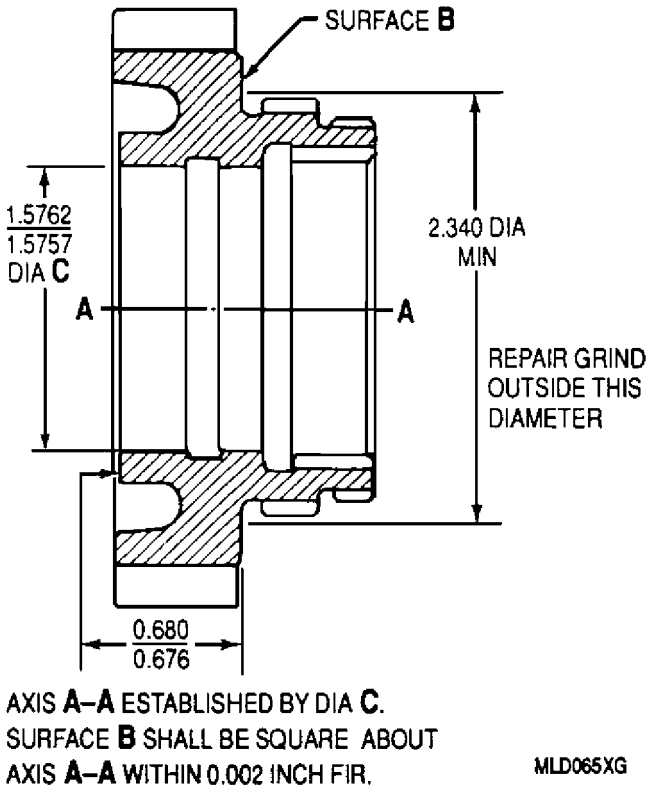

Figure 20. Starter Spur Gear − Rear Face Repair

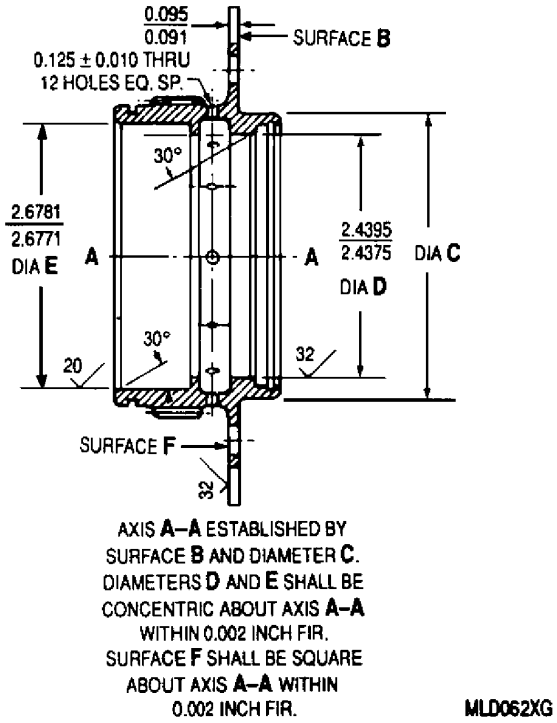

Figure 21. Starter Shaft Bearing Flange − Repair

Table 4. Starter Shaft Bearing Flange − Inspection and Repair

Condition	Serviceable Limits	Repairable Limits	Disposition
MPI indications or non-metallic inclusions.	Indications which are light, scattered and parallel to material flow lines. No fatigue type progression is evident.	Not repairable.	Condemn flanges having the following: a. Indications extending into root corners of spline teeth. b. Open indications breaking into slots or holes and showing appreciable depth.
Wear on Surface F, (figure 21)	Minimum flange thickness of 0.085 in. No metal build−up or sharp edges.	Exceeds serviceable limits.	Polish to remove metal buildup and sharp edges. Repair flange by chrome-plating (WP 018 00). Plate thickness shall not exceed 0.010 in. after finishing flange (figure 21).
Wear on Diameter D (figure 21)	Polish to remove wear. Maximum diameter of 2.440 in.	Exceeds serviceable limits.	Repair diameter by chrome plating (WP 018 00). Plate thickness shall not exceed 0.010 in. after finishing diameter (figure 21).
Wear on Diameter E (figure 21)	Polish to remove wear. Maximum diameter of 2.6786 in.	Exceeds serviceable limits.	Repair diameter by chrome plating (WP 018 00). Plate thickness shall not exceed 0.010 in. after finishing diameter (figure 21).
External spline wear. Refer to WP 047 00.	Average of four gage readings shall not exceed 0.002 in. No single reading shall exceed 0.003 in.	Not repairable.	Condemn flanges exceeding serviceable limits.

19. CONE TYPE PROPELLER BRAKE ASSEMBLY − INNER PROPELLER BRAKE CONE INSPECTION.

a. Inspect inner cone. Refer to table 5.

b. Refer to WP 017 00 for magnetic particle inspection (MPI) procedure.

20. CONE TYPE PROPELLER BRAKE ASSEMBLY − INNER PROPELLER BRAKE CONE REPAIR.

Materials Required

Specification No./Part No.	Nomenclature
——	Agent, wetting

Materials Required (contd)

Specification No./Part No.	Nomenclature
220 grit	Carborundum
and	or
325 grit	Carbide, Silicone
——	Compound, corrosion preventive

a. Repair inner cone. Refer to Disposition column, table 5.

b. Replace cones not within serviceable limits after repair.

Table 5. Starter Shaft Bearing Flange − Inspection and Repair

Condition	Serviceable Limits	Repairable Limits	Disposition
MPI indications or nonmetallic inclusions.	Indications which are light scattered and parallel to material flow lines. No fatigue type progression is evident.	Not repairable.	Replace cones having the following: a. Indications extending into root corners of spline teeth. b. Open indications breaking into slots or holes and showing appreciable depth.
Surface defects on inner cone.	Surface finish of 10 − 25 RMS (measured axially).	1. Bronze pickup, slight bluing or scoring.	Remove by grinding: do not grind beyond minimum cone diameter of 4.870 in. as directed in paragraph 21. Inspect for grinding burns. Refer to WP 009 00.
		2. Surface finish of 26 − 50 RMS.	Vapor blast at 100 psig air pressure using following solution: Water . . . . . 12−15 gal Wetting agent . . one oz., Carborundum or Silicon Carbide Grit No. 220 Mesh (or approved equivalent) . . . . 45−50 lb. Surface finish after vapor blasting shall be 10 − 30 RMS. Additional vapor blasting, using No. 325 grit, may be used on parts which are marginal. Thoroughly clean part of all grit and coat with approved corrosion preventive.
Cracks in inner cone.	Cracks shall be axial. Cracks shall be less than 0.300 in. in length and shall have minimum 0.200 in. separation between cracks.	All cones with identified cracks must meet the limits of serviceable parts. No rework of cracks permitted.	Condemn cones exceeding serviceable limits.
Internal spline wear. Refer to WP 047 00.	Maximum gage reading of 0.015 in. No sharp steps allowed.	Not repairable.	Condemn cones exceeding serviceable limits.

21. CONE TYPE PROPELLER BRAKE ASSEMBLY − INNER PROPELLER BRAKE CONE GRINDING.

Support Equipment Required

Part No./Type Designation	Nomenclature
23030228	Arbor, grind, inner cone
6797978	Gage, angle and diameter, inner cone

NOTE

Be sure all contacting surfaces are clean.

Be sure face of the inner cone is firmly in contact with each of the three stop blades before the face damp is fitted into place and secured.

a. Install inner cone on 23030228 grind arbor (figure 22).

b. Inner cone which has not been previously ground shall be installed in grind arbor and marked as follows:

(1) With locating pins engaged properly in helical spline and face clamp removed, mount arbor between centers of grinder and indicate OD of cone.

(2) Repeat locating pin engagement, but in different spaces each time and indicating OD of inner cone in each of these positions.

(3) By trial and error, select and identify position of the nearest cone concentricity with respect to grinding arbor.

(4) Electrolytic etch symbol ⊕ inner cone opposite to symbol on face of stop block. This will assure that each of the pins of the grinding arbor will be located in same respective helical tooth space on each subsequent grinding.

CAUTION

Use care in tightening the face clamp nut. Apply light pressure on the face clamp using the detail −11 wrench of the grind arbor.

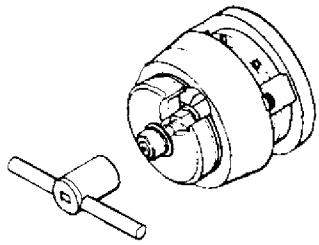

ZZT352XJ

Figure 22. 23030228 Grind Arbor

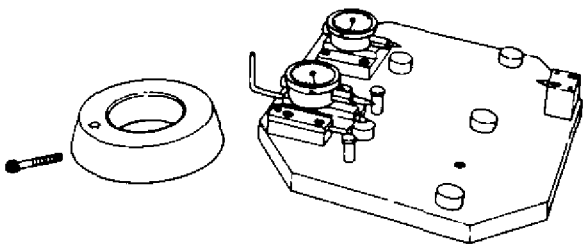

ZZT353XJ

Figure 23. 6797978 Angle and Diameter Gage

c. Inner cone which has been previously ground, shall be located on the same tooth space according to the index marking.

d. After grinding install inner cone in 6797978 angle and diameter gage (figure 23) and check the cone with the master.

22. BALANCE PROPELLER BRAKE ASSEMBLY ASSEMBLY FOR DYNAMIC BALANCE. (figure 24)

Support Equipment Required

Part No./Type Designation	Nomenclature
23034309	Holder, outer member
6799536	Wrench, outer member retainer nut (spline)
——	Wrench, torque (0−200 lb ft)

Materials Required

Specification No./Part No.	Nomenclature
AS3085−019	Packing, preformed (1)
MIL−PRF−23699	Oil, lubricating
6886130	Seal, prop brake (1)

CAUTION

The outer member assembly, starter spur gear, starter shaft, and apply spring are a serialized matched set. Be sure part serial numbers match.

a. Check to be sure set serial numbers (Location A, figure 29) are the same on outer member assembly (18, figure 24), starter spur gear (17), starter shaft (10), and apply spring (9). If any of these parts is a replacement, mark the set serial number on the replacement part in applicable Location A (figure 29).

NOTE

All existing index O−marks are obliterated whenever the outer member lining is replaced, or outer member assembly, starter spur gear, or starter shaft is replaced.

b. If outer member lining was replaced or outer member assembly (18, figure 24), starter spur gear (17), or starter shaft is replaced obliterate existing index O−marks on these parts (new markings will be applied after dynamic balancing).

NOTE

The existing index O−marks will be used for alignment when none of the parts (in step b) have been replaced.

c. Preassemble outer member assembly and starter spur gear as follows:

(1) Install outer member assembly on starter spur gear with index O−marks aligned.

(2) Install spanner nut (16) on starter spur gear fingertight. Install assembly on 23034309 holder.

d. Torque and secure spanner nut (16) as follows:

(1) Using 6799536 wrench torque nut (16) to 150 lb. − ft, loosen to zero, torque again to 120−150 lb−ft. (QA). Install internal spline lockring (15) with tangs aligned with slots in outer member. Install internal retaining ring (14) to secure lockring.

e. Install packing (13) on plug (12). Install plug into starter shaft using brass drift and arbor press.

WARNING

Lubricating oil contains materials hazardous to health and will produce paralysis if swallowed. Avoid prolonged contact and wash hands thoroughly after handling to prevent skin irritation. Do not use near heat or flame. Use only with adequate ventilation.

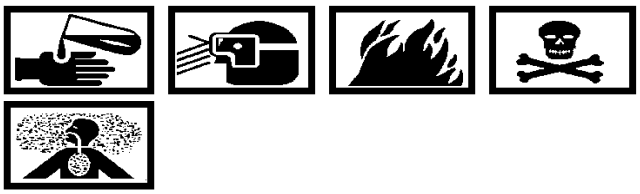

Lubricating Oil, MIL−PRF−23699 2

f. Presoak propeller brake seals in MIL−PRF−23699 oil for 10−12 hours before installation.

g. Install presoaked seal (11) into groove of starter shaft flange. Install shaft into starter spur gear with index O−mark on shaft aligned with O−mark on gear.

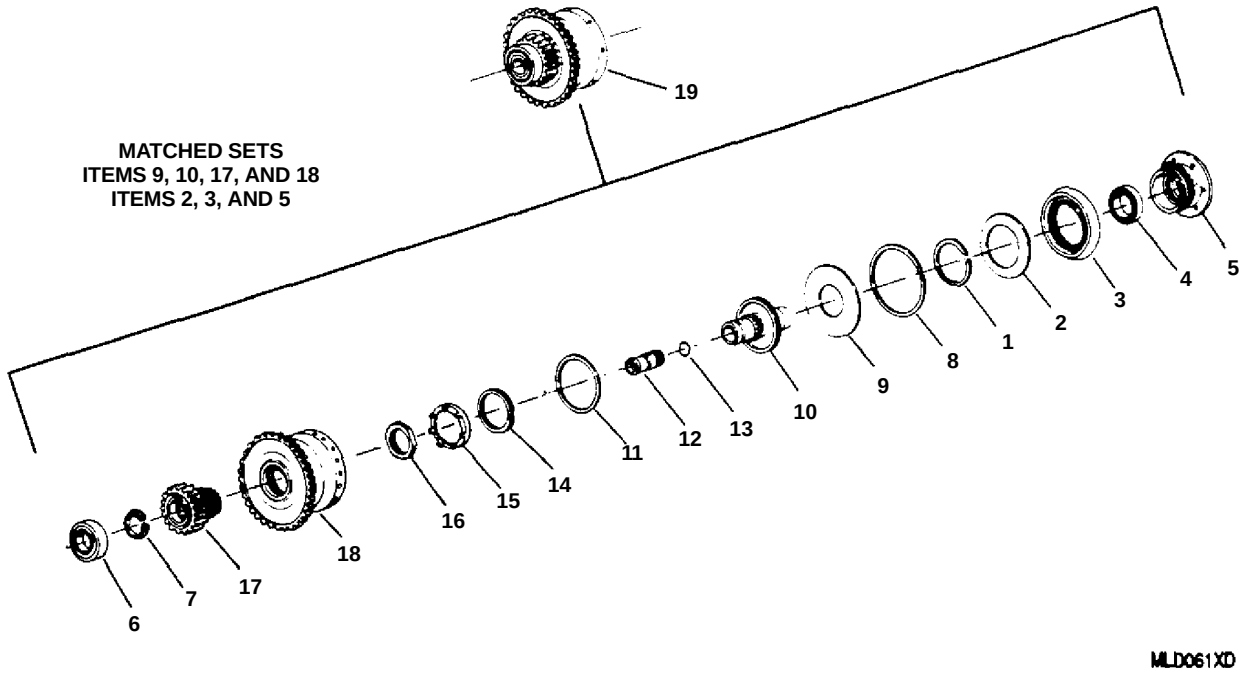

1. External Retaining Ring
2. Release Spring
3. Inner Propeller Brake Cone
4. Roller Bearing
5. Starter Shaft Bearing Flange
6. Roller Bearing
7. Split External Retaining Ring
8. Internal Retaining Ring
9. Apply Spring
10. Starter Shaft
11. Propeller Brake Seal
12. Starter Shaft Plug
13. Preformed Packing
14. Internal Retaining Ring
15. Internal Spline Lock Ring
16. Spanner Nut
17. Starter Spur Gear
18. Outer Member Assembly
19. Cone Type Propeller Brake Assy

Figure 24. Cone Type Propeller Brake Assembly − Assembly

h. Install apply spring (9) with serial number facing rearward. Install internal retaining ring (8) with index line on ring and outer member aligned.

i. Dynamic balance is required whenever a new apply spring retaining ring was installed, outer member lining was replaced, outer member assembly, start spur gear, or starter shaft was replaced. Refer to paragraph 23.

23. BALANCE PROPELLER BRAKE ASSEMBLY DYNAMIC BALANCE. The balance propeller brake assembly shall be dynamically balanced whenever the starter shaft assembly, starter spur gear, outer member assembly, outer member lining, or apply spring retaining ring was replaced.

NOTE

The existing index O−marks on the outer member assembly, starter spur gear, and starter shaft should have been obliterated at assembly.

Support Equipment Required

Part No./Type Designation	Nomenclature
6797595	Half bearing, front and rear (2)
6797596	Fixture, balance
6797633	Pulley, drive
6797634	Pulley, drive
6797635	Belt, drive
6797636	Belt, drive
6798183 (Gisholt Type 31 S)	Machine, balance, horizontal rotating static and dynamic

a. If necessary, obliterate existing index O−marks from outer member assembly, starter spur gear, and starter shaft.

b. Install balance propeller brake assembly in 6797596 fixture (figure 25) with 6797595 front and rear half bearings. Install fixture in 6798183 balance machine using 6797635 belt (figure 26) and 6797633 pulley (figure 27) or 6797636 belt (figure 26) and 6797634 pulley (figure 28) as applicable.

c. Dynamically balance the assembly to within 0.2 oz in. in each Plane X (figure 29) by material removal, axis to be established by Dia B and C. Mark serial numbers, index O−marks and index lines as applicable by steps d. and e.

d. If starter shaft assembly, starter spur gear, outer member assembly, or apply spring was replaced, mark serial number at applicable Location A (figure 29) and O−mark in line as shown on new parts using controlled electric etch, acid etch, electrolytic etch, or controlled engrave. Refer to AS 478, class M.

e. After balancing re−mark index lines as shown in figure 29 and as follows:

(1) When a new apply spring retaining ring and the existing outer member assembly are installed mark an index line on ring aligned with existing index line on outer member.

(2) When the existing apply spring retaining ring and a new outer member assembly are installed mark an index line on outer member aligned with existing index line on ring.

(3) When a new outer member assembly and a new apply spring retaining ring are installed mark index lines as shown in figure 29.

(4) Mark index line on new parts using controlled electric etch, acid etch, electrolytic etch, or controlled engrave. Refer to AS 478, class M.

f. If the balance propeller brake assembly was disassembled for marking parts, reassemble with index lines and index O−marks aligned.

g. Complete final assembly of cone type propeller brake assembly and bend test. Refer to paragraphs 24 and 25, this work package.

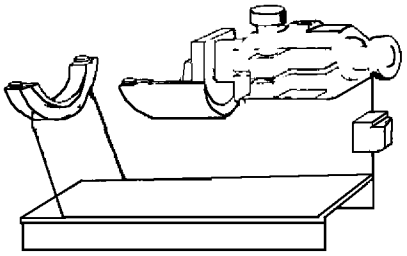

ZZT349XJ

Figure 25. 6797596 Balance Fixture

ZZT351XJ

Figure 26. 6797635 and 6797636 Belt

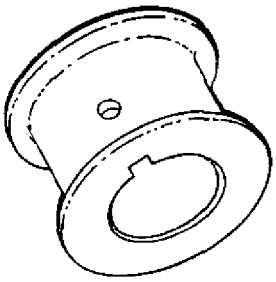

ZZT350XJ

Figure 27. 6797633 Pulley

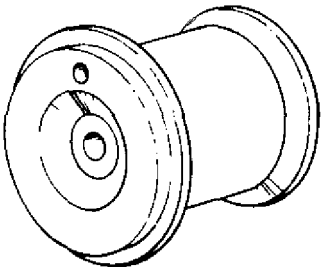

ZZT336XJ

Figure 28. 6797634 Pulley

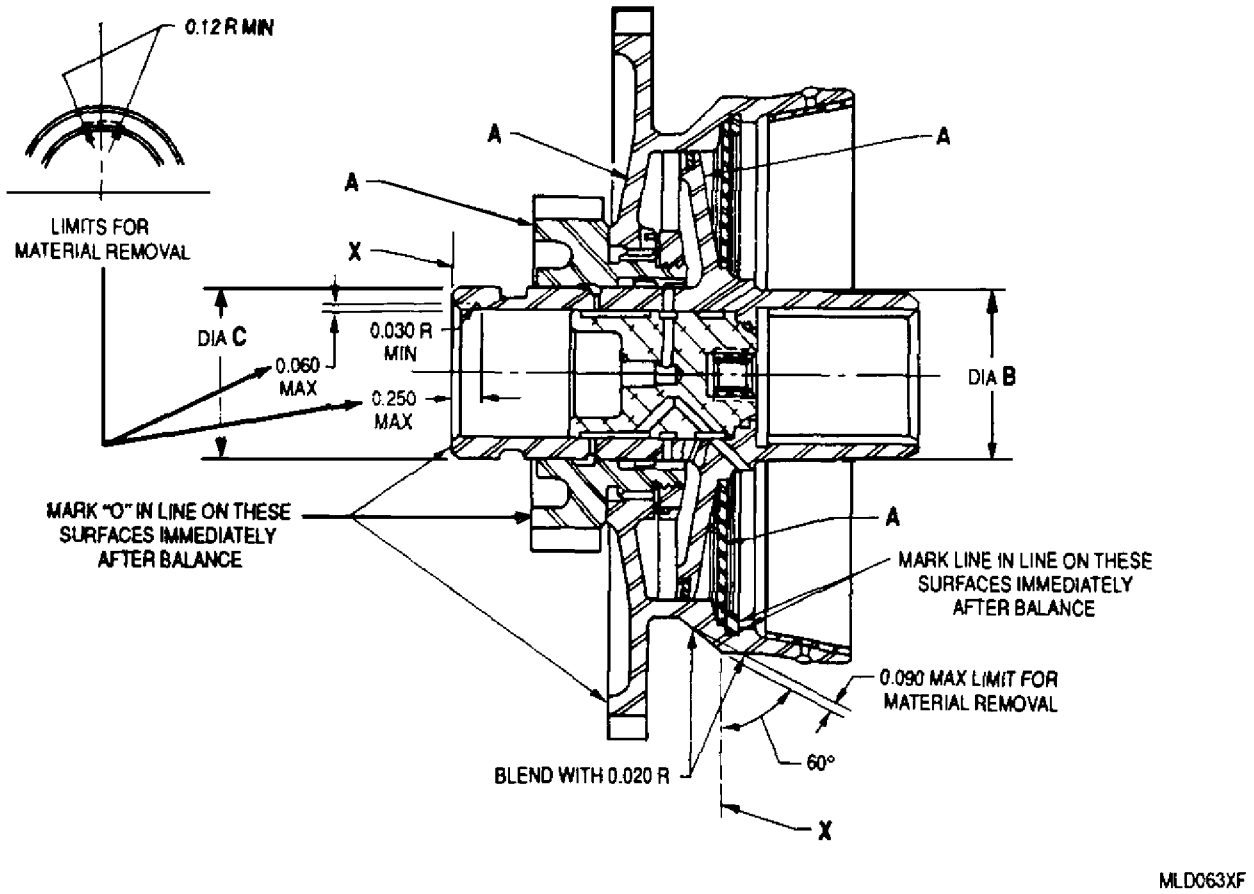

Figure 29. Balance Propeller Brake Assembly − Dynamic Balance

24. CONE TYPE PROPELLER BRAKE ASSEMBLY − ASSEMBLY FOR BENCH TEST.

Support Equipment Required

Part No./Type Designation	Nomenclature
6796770	Fixture, test
23055727	Adapter, test stand
——	Gloves, insulated

NOTE

Be sure the index O−marks of the inner cone and the bearing flange have been obliterated.

a. If necessary, obliterate existing index O−marks from inner cone and bearing flange.

WARNING

Heated parts can cause skin damage (burns). Handle parts with clean insulated gloves.

b. Install rear bearing outer ring in bearing flange with numbered side facing rearward. Refer to figure 30, Ref 1 for fit limits. Heat flange if necessary. Refer to NAVAIR 02B−5DG−6−1, WP 016 00.

c. Install rear bearing inner ring and rollers on starter shaft with numbered side facing rearward (out). Seat firmly. Refer to figure 30, Ref 2 for fit limits.

d. Install retaining split ring on front end of shaft.

e. Install front bearing inner ring, rollers and outer ring on starter shaft with numbered side facing forward (out). Refer to figure 30, Ref 3 for fit limit.

NOTE

The release spring is installed with word FRONT facing away from inner cone.

f. Install inner cone, release spring (with word FRONT away from cone), and external retaining ring on bearing flange.

g. Install balance propeller brake assembly into bearing flange.

NOTE

When testing the propeller brake assembly, 23055727 test stand adapter must be used.

h. Install cone type propeller brake assembly in 6796770 test fixture.

i. Install test fixture oil tube through fixture headstock and into starter shaft plug. Ascertain that oil tube will seal, then secure.

j. Make a temporary alignment mark on the brake inner cone opposite the zero degree mark.

k. Check for freedom of propeller brake assembly operation by applying 180 psig oil pressure through oil tube in starter shaft. The brake should disengage.

l. Check that disengaged propeller brake rotates freely on bearings; release oil pressure to engage brake.

NOTE

Marking the inner cone and the bearing flange will require partial disassembly of the propeller brake assembly. Do not disassemble the balance propeller brake assembly.

m. Immediately after testing re−mark O−marks on brake inner cone and the bearing flange on the forward edge of their mating surfaces.

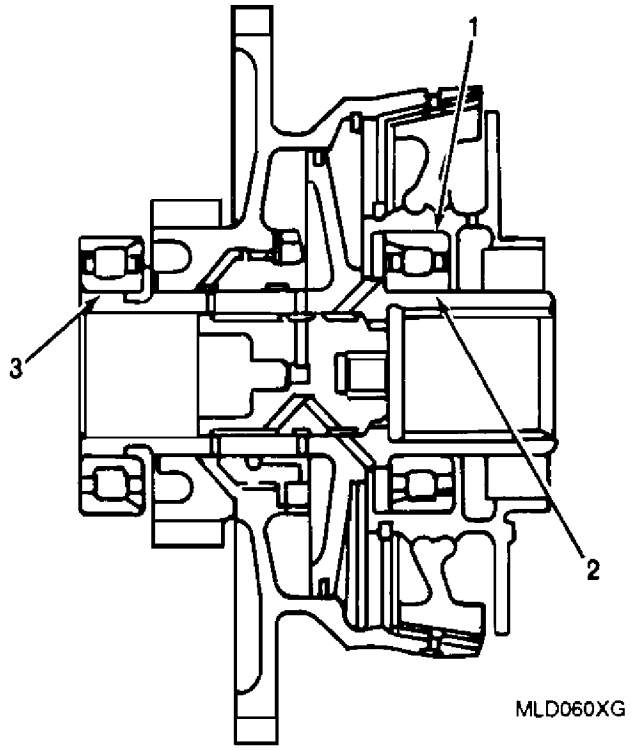

Ref No.	Description	Min.	Max.
1	Bearing − Flange	0.0001T	0.0021L
2	Bearing − Shaft	0.0007T	0.0004T
3	Bearing − Shaft	0.0007T	0.0004T

Figure 30. Cone Type Propeller Brake Assembly − Fit Limits

25. CONE TYPE PROPELLER BRAKE ASSEMBLY − BENCH TEST. Bench test complete assembly as follows on 6796770 propeller brake test fixture (figure 31).

a. Torque Test: Three consecutive breakaway torque test values shall be within 10 lb ft of each other and three consecutive prevailing torque values shall be within 5 lb ft of each other. Limit test to eight cycles.

(1) Breakaway torque: 117 lb ft minimum at outer member.

(2) Prevailing torque: 35 lb ft minimum at outer member.

(3) Breakaway torque: 166 lb ft maximum at starter shaft.

b. Reverse Direction Slippage: Slippage between inner cone and outer member, 3 degrees maximum per cycle for five consecutive cycles. Limit test to 10 cycles.

c. Disengagement pressure: 55 psig maximum.

d. Outer member axial travel: 0.069−0.123 in.

e. Oil flow at front:

(1) At 180 psig: 6.5 lbs/minute maximum, brake disengaged.

(2) At 10 psig: 2.0 lbs/minute minimum, brake engaged.

f. Engagement pressure: 8 psig minimum.

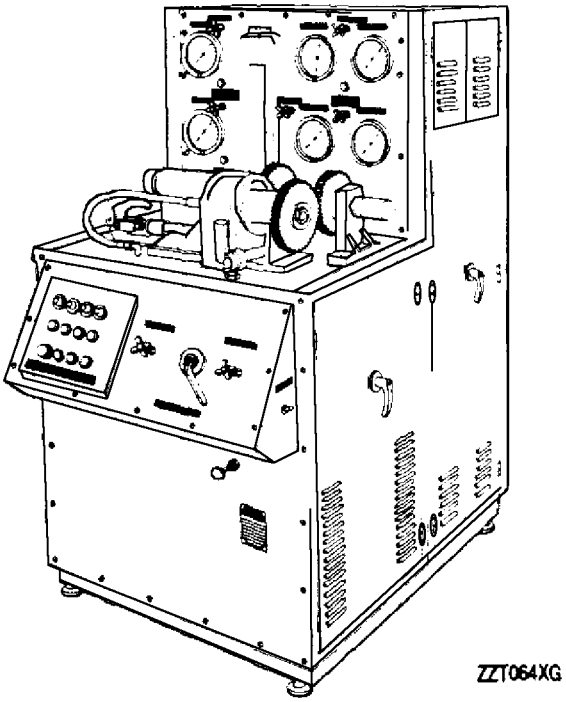

Figure 31. 6796770 Propeller Brake Test Fixture

DEPOT MAINTENANCE

MAINTENANCE

PINION GEAR ASSEMBLY

Reference Material

Bearing Journal − Repair . . . . . WP 012 00
Gears − Inspection . . . . . WP 016 00
Magnetic Particle and Fluorescent Penetrant Inspection − Procedures . . . . . WP 017 00
Plating and Surface Treatment of Parts . . . . . WP 018 00
Reduction Gear Assembly − Assembly . . . . . WP 033 00
Internal and External Splines − Inspection and Repair . . . . . WP 047 00
Anti−Friction Bearings − Maintenance . . . . . WP 138 00
Maintenance . . . . . NAVAIR 02B−5DG−6−1
Cleaning and Corrosion Treatment Standard Practices . . . . . WP 013 00
Assembly and Disassembly − Standard Practices . . . . . WP 016 00
Black Oxide Coating . . . . . AMS 2485

Alphabetical Index

Subject **Page No.**

Introduction 3
Pinion Gear Assembly 3
Assembly 12
Bearing Inspection 4
Coupling Outer Member Shaft Inspection 10
Coupling Outer Member Shaft Repair 10
Disassembly 3
Parts Cleaning 4
Pinion and Accessory Drive Shaftgear Assembly Dynamic Balance 14
Pinion and Main Accessory Drive Shaftgear Assembly Inspection 4
Pinion and Main Accessory Drive Shaftgear Assembly Flanged Bushing Replacement 7

Alphabetical Index (contd)

Subject	Page No.
Pinion and Main Accessory Drive Shaftgear Assembly Repair	4
Pinion and Main Accessory Drive Shaftgear Assembly Runout Check	7
Scavenge Pump Drive Pinion Gear Inspection	10
Scavenge Pump Drive Pinion Gear Repair	10
Scavenge Pump Drive Pinion Gear Runout Check	10

Record of Applicable Technical Directives

None

1. **INTRODUCTION.**

2. This work package (WP) provides disassembly, cleaning, inspection, repair, and assembly procedures for the pinion gear assembly. The pinion gear assembly is comprised of the following:

- Pinion shaftgear balance assembly
- Scavenge pump drive pinion gear
- Coupling outer member shaft
- Front and rear bearing inner rings

3. **PINION GEAR ASSEMBLY.**

4. PINION GEAR ASSEMBLY − DISASSEMBLY.

Support Equipment Required

Part No./Type Designation	Nomenclature
23034310 (or 6799614−100)	Puller, front bearing (hydraulic)
23034311 (or 6796639 with 2303411 −2 and −3)	Holder, pinion gear assembly
23051179	Case, containment, pinion shaft and puller
6796046	Wrench, rear bearing retaining nut
6796253	Support, pinion gear
6796559	Puller, scavenge pump drive gear
6797897	Wrench, front bearing spanner nut
6799643−100	Puller, rear bearing (hydraulic)

a. Remove the special internal retaining rings (dampers) from main accessory drive gear.

b. Remove front bearing retaining nut as follows: (figure 1)

(1) Install pinion shaftgear into 6796253 support.

(2) Remove internal retaining ring and headed pin.

(3) Remove retaining nut using 6797897 wrench.

c. Remove scavenge pump drive pinion gear from pinion shaftgear using 6796559 puller (figure 2).

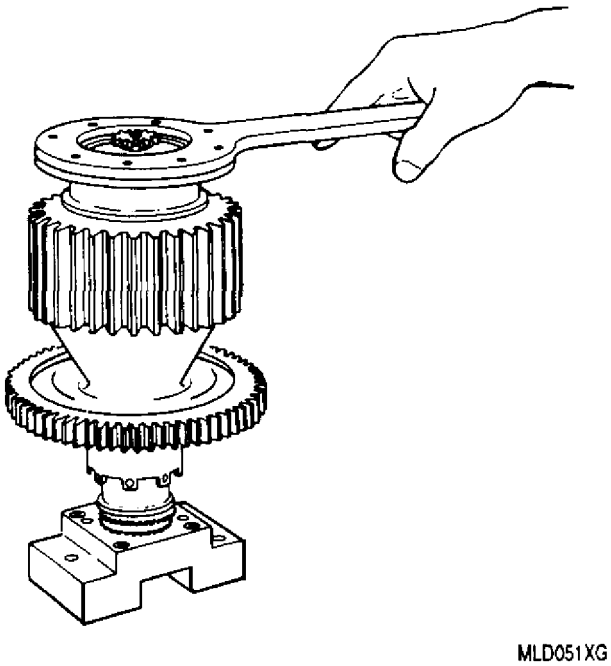

Figure 1. Removing Pinion Shaftgear Front Bearing Retaining Nut Using 6796253 Support and 6797897 Wrench

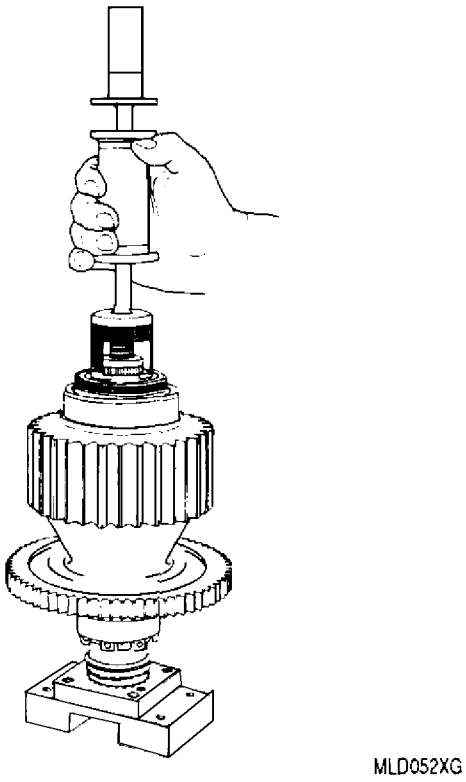

Figure 2. Removing Scavenge Pump Drive Pinion Gear Using 6796559 Puller

d. Remove pinion shaftgear from support.

e. Install 23034310 or 6799614−100 puller on front bearing inner ring. Use 23051179 containment case to retain pinion shaftgear. Remove inner ring and store with mating outer ring and rollers (matched set).

f. Remove preformed packing and external retaining ring from coupling outer member shaft. Remove shaft from pinion shaftgear.

g. Remove rear bearing inner ring as follows: (figure 3)

(1) Install pinion shaftgear into 23034311 or 6796639 with 23034311−2 and −3 holder.

(2) Remove and discard cotter pin from lockpin and nut lug. Remove lockpin.

(3) Remove retaining nut using 6796046 wrench.

(4) Remove pinion shaftgear from holder.

h. Install 6799643−100 puller on rear bearing inner ring. Remove inner ring and store with mating outer ring and rollers (matched set).

NOTE

The internal snapring and bushing are only removed for cause.

i. Do not remove internal snapring and flanged bushing from ID of pinion shaftgear.

5. PINION GEAR ASSEMBLY − PARTS CLEANING. Clean pinion gear assembly parts. Refer to NAVAIR 02B−5DG−6−1, WP 013 00.

6. PINION AND MAIN ACCESSORY DRIVE SHAFTGEAR ASSEMBLY INSPECTION.

Support Equipment Required

Part No./Type Designation	Nomenclature
6797564	Gage, bushing plug
——	Mirror, dental (45° angle/1 in. dia/ 8−10 in. handle)

a. Inspect pinion and main accessory drive shaftgear assembly. Refer to table 1.

b. Refer to WP 017 00 for Fluorescent Penetrant Inspection (FPI) and Magnetic Particle Inspection (MPI) procedures.

c. Refer to WP 047 00 for spline inspection procedures.

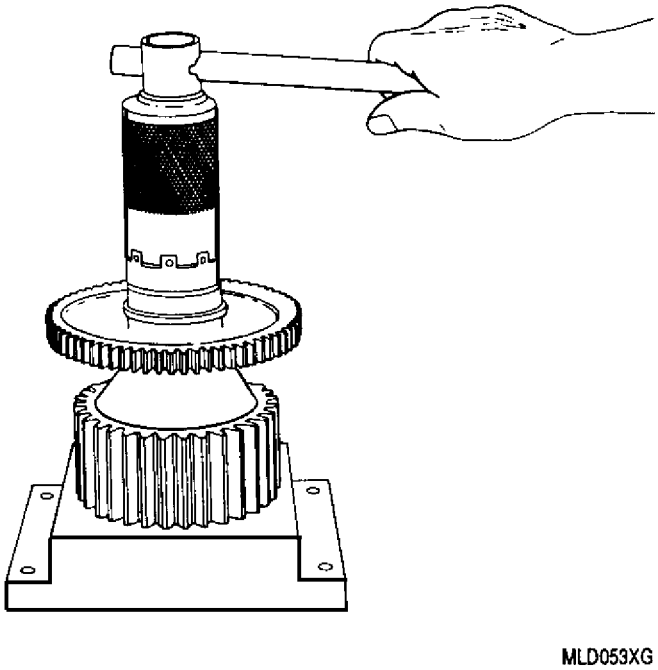

Figure 3. Removing Pinion Shaftgear Rear Bearing Retaining Nut Using 23034311 Holder and 6796046 Wrench

7. PINION AND MAIN ACCESSORY DRIVE SHAFTGEAR ASSEMBLY REPAIR.

a. Repair shaftgear assembly. Refer to Disposition column, table 1.

b. Replace shaftgear assembly not within serviceable limits after repair.

8. PINION GEAR ASSEMBLY − BEARING INSPECTION.

a. Match inner rings by serial number with mating outer rings and rollers.

b. Inspect bearings. Refer to WP 138 00.

Table 1. Pinion and Main Accessory Drive Shaftgear Assembly − Inspection and Repair

Condition	Serviceable Limits	Repairable Limits	Disposition
FPI or MPI indications: Cracks.	Not serviceable.	Not repairable.	Condemn shaftgear exceeding serviceable limit.
Cracks, particularly in OD and ID areas of oil wetting holes (figure 4).	Not serviceable.	Not repairable.	Inspect oil wetting holes(figure 4). No cracks permitted, condemn shaftgear.
Pinion shaftgear teeth.	Refer to WP 016 00.	Exceeds serviceable limits.	Rework per WP 016 00.
Minute spalling of pinion shaftgear teeth.	Not serviceable.	Spalled areas shall not exceed 3/4 in. in total length nor be within 1/2 in. of tooth end. An interrupted area shall not exceed a height of 1/32 in. across the width of tooth.	Lightly vapor hone spalled areas. Condemn gears if honing reveals any pits. Acceptable honed gears shall be black oxide treated. Refer to AMS 2485.
Main accessory drive gear teeth.	Refer to WP 016 00. Minimum serviceable gear PD is 6.8809 in. over two 0.1728 in. dia pins.	Exceeds serviceable limits.	Rework part per WP 016 00.
Galling on splines of pinion gear.	Not serviceable.	Not repairable.	Condemn gear exceeding serviceable limits.
Worn shaft ID, 2.562−2.563 in. (oil pump drive pinion gear bore Diameter K (figure 10). Check run out per paragraph 10, this WP.	Max ID of 2.563 in.	Exceeds serviceable limits.	Repair shaft lD with chrome plate per WP 018 00. Finish grind ID to 2.562−2.563 in. Diameter K (figure 10) shall be concentric with bearing journals within 0.002 in. FIR. Remark O−mark.
Bearing journal wear; Diameters A and B (figure 8).	Diameter A: 2.9538 in. minimum. Diameter B: 2.1660 in. minimum.	Dia A: Min of 2.9438 in. Dia B: Min of 2.1560 in.	Repair journals per WP 012 00. Finish journals to dimensions in figure 8.
Flanged bushing damage.	Bushing ID concentric with axis within 0.001 in. and 6797564 plug gage can not be installed.	Not repairable.	Replace bushing. Refer to paragraph 9, this WP.
O−mark at point of maximum run out on front end surface (figure 10).	Gear clearly marked as specified by figure 10.	Serviceable gears that do not have maximum run out marks.	Mark O−mark at point of maximum runout, refer to paragraph 10. this WP.

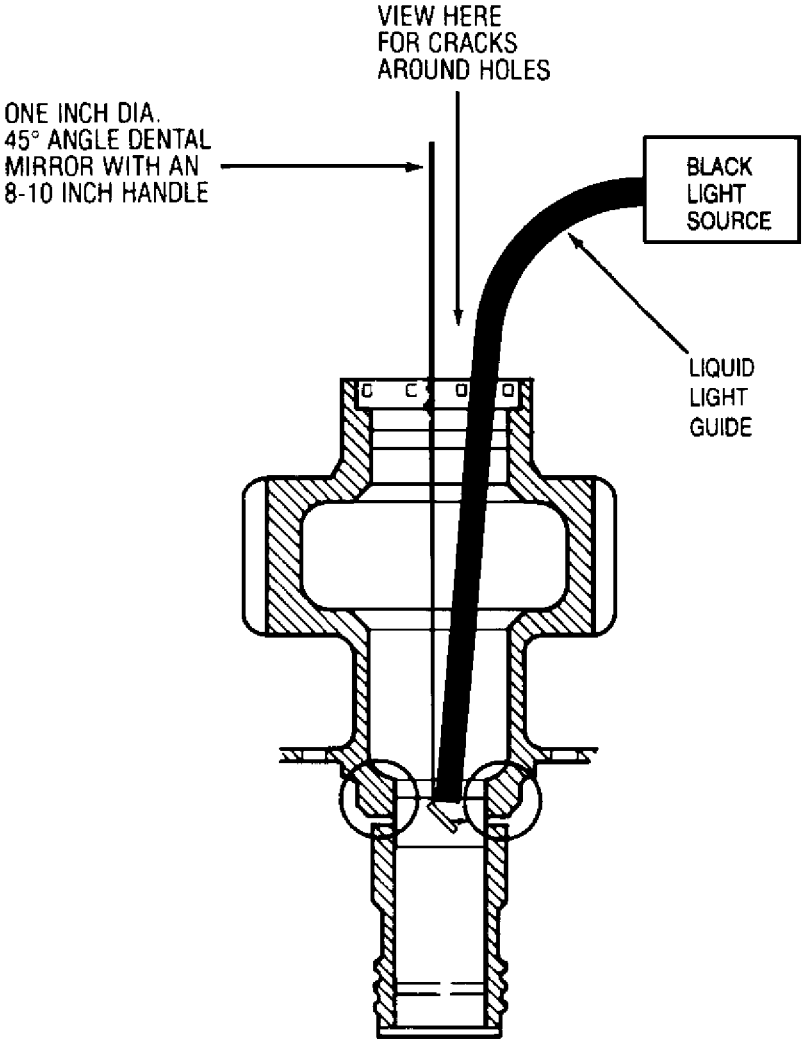

QBT002XA

Figure 4. Oil Wetting Hole Crack Inspection Technique

9. PINION AND MAIN ACCESSORY DRIVE SHAFTGEAR ASSEMBLY FLANGED BUSHING REPLACEMENT.

Support Equipment Required

Part No./Type Designation	Nomenclature
23034332	Fixture, boring
6796138	Drift, removal
6796185	Drift, installation
6796253	Support, pinion gear
6796937	Fixture, concentricity check

a. Remove snap ring from rear face of flanged bushing.

b. Install pinion shaftgear on 6796253 support and remove bushing using 6796138 drift and arbor press (figure 5).

c. Install replacement bushing using 6796185 drift (figure 6).

d. Install pinion shaftgear in 23034332 boring fixture (figure 7), attached to a Heald Borematic 47A machine or equivalent, and bore ID to 1.249 − 1.250 in. (figure 8).

e. Install pinion shaftgear in 6796937 concentricity fixture. Bushing bore and bearing journals shall be concentric within 0.001 in. FIR (figure 9).

f. Secure bushing by installing snap ring.

10. PINION AND MAIN ACCESSORY DRIVE SHAFTGEAR ASSEMBLY RUNOUT CHECK.

a. Install pinion shaftgear in V−blocks mounting on bearing journals.

b. Check runout of Diameter K (figure 10) to find point of maximum runout.

c. Diameter K shall be concentric with bearing journals within 0.002 in. FIR.

d. Vibro peen an O−mark on front end surface at point of maximum runout as shown.

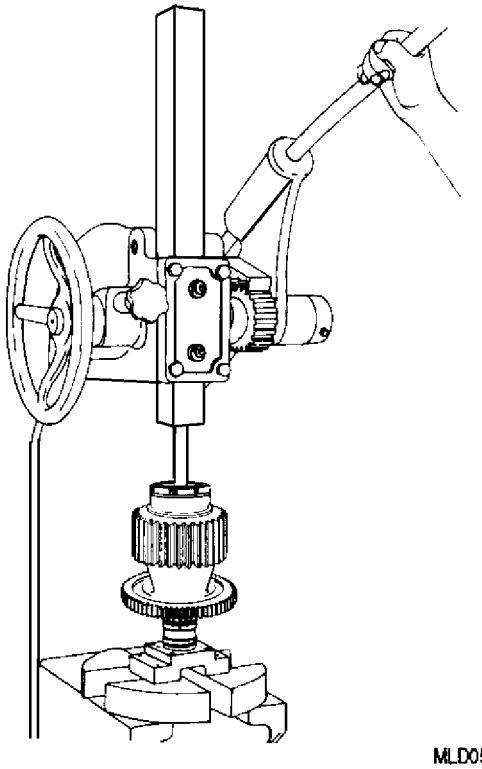

Figure 5. Removing Pinion Shaftgear Flanged Bushing Using 6796253 Support and 6796138 Drift

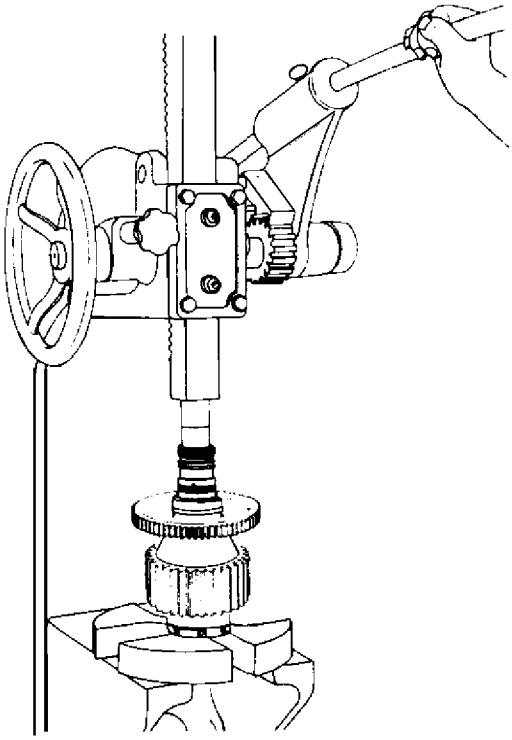

Figure 6. Installing Pinion Shaftgear Flanged Bushing Using 696185 Drift

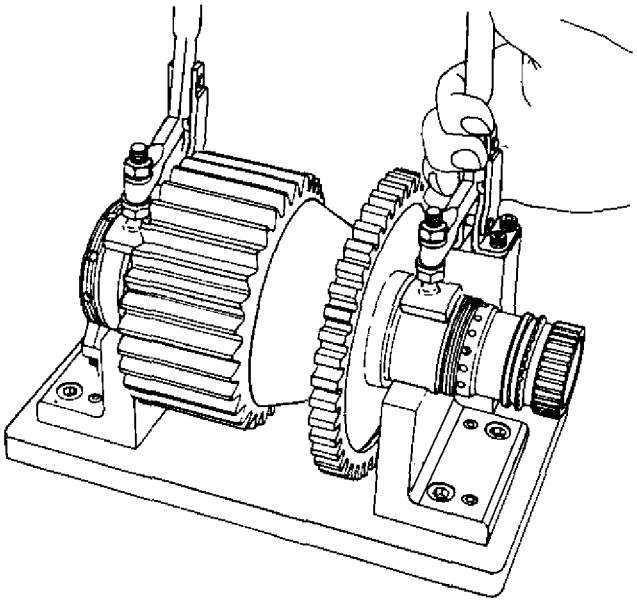

MLD059XG

Figure 7. 23034332 Pinion Shaftgear Boring Fixture

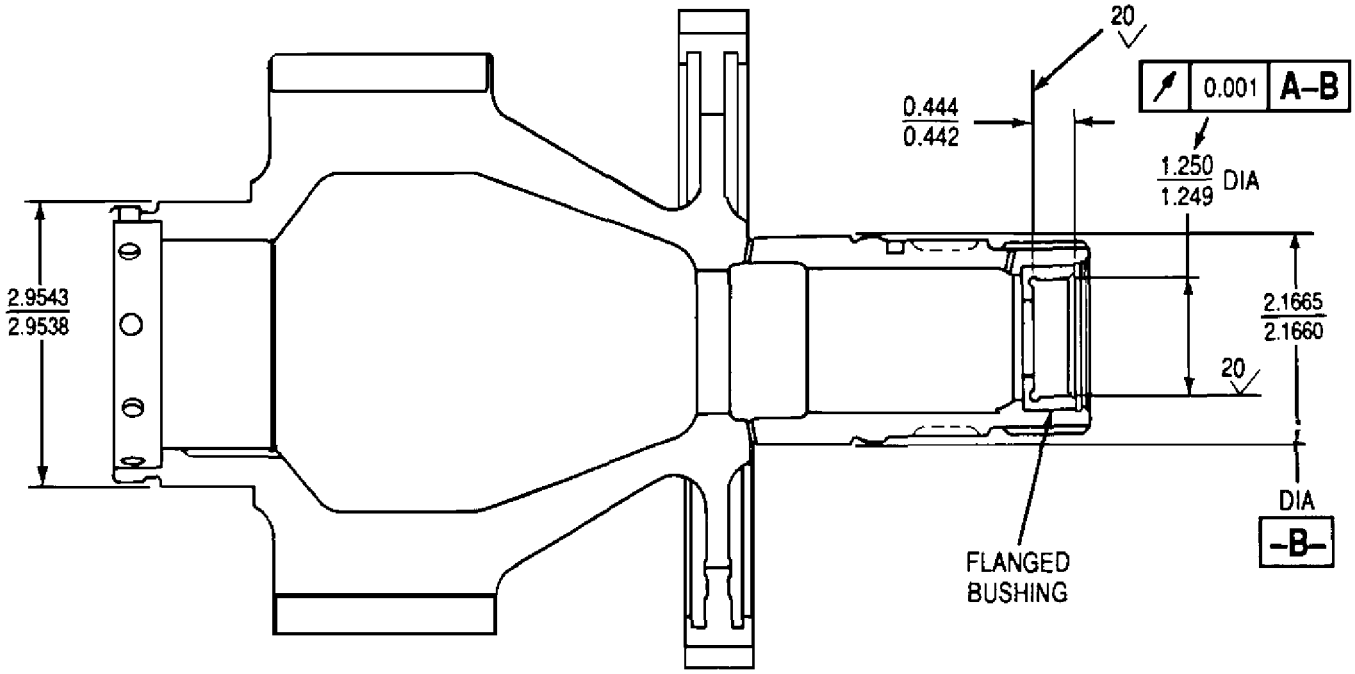

MLD056AD

Figure 8. Pinion Shaftgear Bushing − Rework

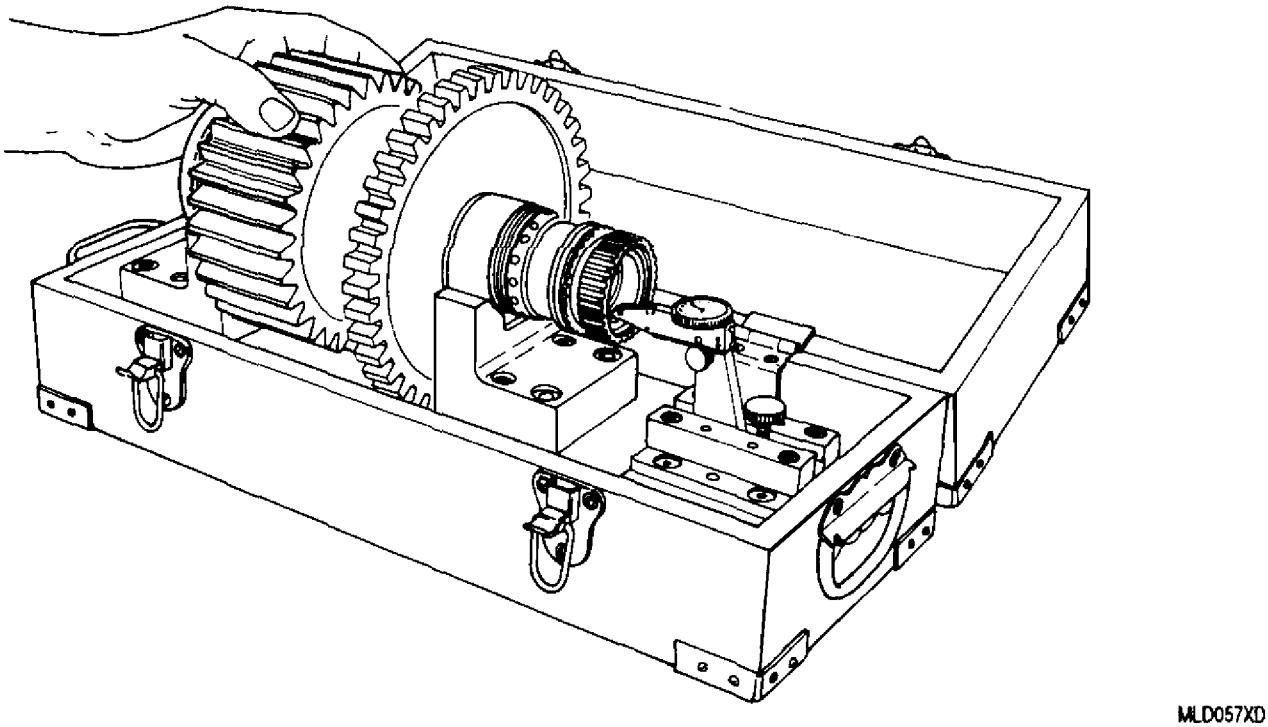

Figure 9. 6796937 Pinion Shaftgear Concentricity Check

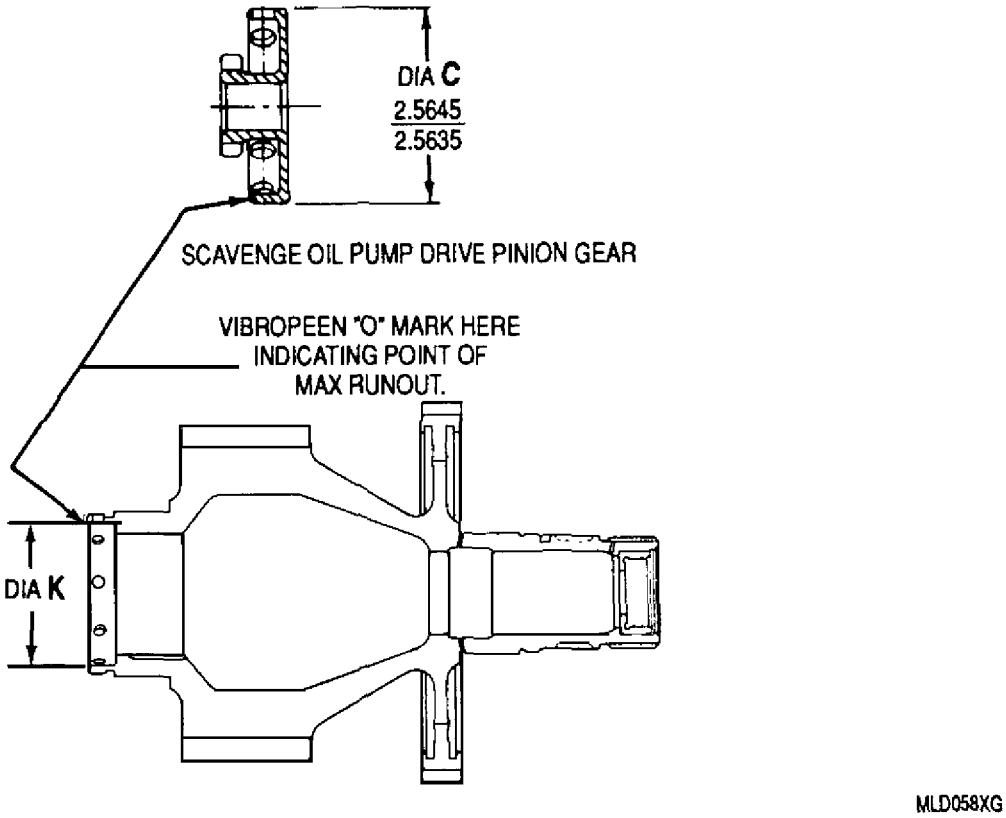

Figure 10. Pinion Shaftgear and Scavenge Pump Drive Pinion Gear Runout Check

Table 2. Scavenge Pump Drive Pinion Gear − Inspection and Repair

Condition	Serviceable Limits	Repairable Limits	Disposition
FPI and MPI indications: Cracks.	Not serviceable.	Not repairable.	Condemn gear exceeding serviceable limits.
Gear teeth damage (dents, nicks, scuffing, etc.)	Refer to WP 016 00.	Not repairable.	Condemn gear exceeding serviceable limits.
O−mark at point of maximum runout on front lip of Dia C surface. (figure 10)	Gear clearly marked as specified by figure 10.	Serviceable gears that do not have maximum runout marks.	Mark O−mark at point of maximum runout. Refer to paragraph 13, this WP.

11. PINION GEAR ASSEMBLY − SCAVENGE PUMP DRIVE PINION GEAR INSPECTION.

a. Inspect scavenge pump drive pinion gear. Refer to table 2.

b. Refer to WP 017 00 for FPI and MPI procedures.

12. PINION GEAR ASSEMBLY−SCAVENGE PUMP DRIVE PINION GEAR REPAIR.

a. Repair scavenge pump drive pinion gear. Refer to Disposition column, table 2.

b. Replace gear not within serviceable limits after repair.

13. PINION GEAR ASSEMBLY−SCAVENGE PUMP DRIVE PINION GEAR RUN − OUT CHECK.

a. Check runout of PD of gear teeth in relation to Diameter C (figure 10) utilizing 0.1440 in. diameter pins held between gear teeth.

b. Runout exceeding 0.004 in. FIR is cause for drive pinion gear replacement.

c. Vibro−peen an O−mark on front lip of Diameter C surface at point of maximum runout as shown.

14. PINION GEAR ASSEMBLY − COUPLING OUTER MEMBER SHAFT INSPECTION.

a. Inspect coupling outer member shaft. Refer to table 3.

b. Refer to WP 017 00 for FPI and MPI procedures.

15. PINION GEAR ASSEMBLY − COUPLING OUTER MEMBER SHAFT REPAIR.

Materials Required

Specification No./Part No.	Nomenclature
AMS 6466	Rod, welding

a. Repair coupling outer member shaft. Refer to Disposition column, table 3.

b. Replace shaft not within serviceable limits after repair.

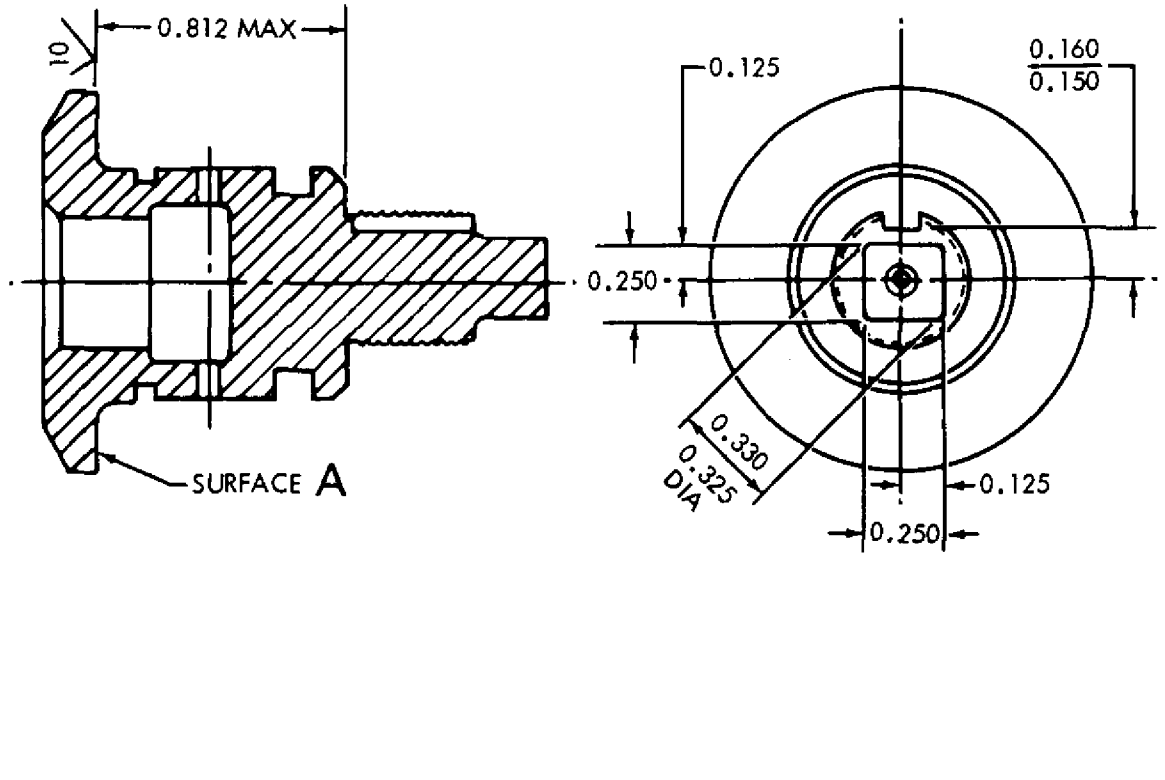

Figure 11. Coupling Outer Member Shaft − Repair

Table 3. Coupling Outer Member Shaft − Inspection and Repair

Condition	Serviceable Limits	Repairable Limits	Disposition
FPI and MPI indications: Cracks.	Not serviceable.	Not repairable.	Condemn gear exceeding serviceable limits.
Fretting on Surface A, figure 11.	No fretting or metal pickup permitted.	Any metal pickup and minor fretting.	Polish, lap, or machine Surface A to remove metal pickup and minor fretting within limit of figure 11.
Damaged, wear, distorted or broken 1/4 in. square drive.	Minor wear, distortion, and/ or rounded corners, less than 1/32 in. from end.	Exceed serviceable limits.	Use AMS 6466 welding rod to build−up square end by inert gas or shielded electrode procedure and machine to figure 11.

16. PINION GEAR ASSEMBLY − ASSEMBLY.

Support Equipment Required

Part No./Type Designation	Nomenclature
23034230	Compressor, front bearing outer ring and rollers
23034311	Holder, pinion gear assembly
6796046	Wrench, rear bearing retaining nut
6796253	Support, pinion gear assembly
6796558	Drift, scavenge pump drive pinion gear
6797897	Wrench, front bearing retaining nut
——	Wrench, torque (0−600 lb ft)
——	Gloves, insulated
——	V−Block (2)
——	Indicator, dial

Materials Required

Specification No./Part No.	Nomenclature
AS3085−113	Packing, preformed (1)
MS24465−151	Pin, cotter (1)
——	Ice, dry

a. Install the special internal retaining rings (dampers) in main accessory drive gear.

b. Install pinion gear assembly rear bearing inner ring as follows:

(1) Install assembly in 23034311 holder with rear end up.

WARNING

Heated parts can cause skin damage (burns). Handle heated parts with clean insulated gloves.

CAUTION

Select fit bearing cage to shaft before heating inner ring per WP 033 00.

(2) Heat rear bearing inner ring to 325°F (163°C) maximum from 30 minutes−4 hours. Refer to NAVAIR 02B−5DG−6−1, WP 016 00. Refer to table 4 for bearing fit limits.

CAUTION

To be sure the inner ring is completely seated, the bearing retaining nut shall be installed and torqued (to seat ring) before the ring has cooled down.

(3) Install heated inner ring on journal with chamfered ID facing rearward. Install retaining nut with word FRONT facing forward and torque to 300−350 lb ft using 6796046 wrench, allow ring to cool. Loosen to zero torque, torque again to 50 lb ft and then tighten 13−17° to align with pin hole. (QA).

(4) Install lock pin and secure pin with cotter pin. Bend upper tang up and cut off flush with OD of nut lug. Bend lower tang down under pin head.

(5) Remove assembly from holder.

c. Install coupling outer member shaft as follows:

(1) Install shaft through ID of pinion gear and secure with external retainer ring. Make sure ring is completely seated.

(2) Install preformed packing into groove at end of shaft.

d. Install pinion gear assembly front bearing inner ring as follows:

(1) Install assembly in 6796253 support with front end up.

WARNING

Heated parts can cause skin damage (burns). Handle heated parts with clean insulated gloves.

CAUTION

Do not expose rollers of 23039738 bearing assembly to temperatures above 250°F (121°C).

Select fit bearing cage to shaft before heating inner ring per WP 033 00.

(2) Heat front bearing inner ring to 325°F (163°C) maximum from 30 minutes−4 hours. Refer to NAVAIR 02B−5DG−6−1, WP 016 00. Refer to table 4 for bearing fit limits.

CAUTION

To be sure the inner ring is completely seated, the bearing retaining nut shall be installed and torqued (to seat ring) before the ring has cooled down.

(3) Install heated inner ring on journal with flanged end facing rearward. Install retaining nut and torque to 300−350 lb ft using 6797897 wrench, allow ring to cool. Loosen to zero torque, torque again to 50 lb ft then tighten 8−12° to align with pin hole. (QA).

e. Install scavenge pump drive pinion gear as follows:

NOTE

Pinion gear assembly should be setting in 6796253 support.

(1) Locate maximum runout O−marks on front faces of pinion gear assembly and pump drive pinion gear. If either O−mark is not present refer to paragraph 10 or 13, this WP, as applicable to incorporate marking.

Dry Ice, BB−C−104 **55**

(2) Freeze pump drive pinion gear using dry ice.

(3) Install pump drive pinion gear into pinion gear ID as follows:

(a) Install pump drive pinion gear with runout O−mark approximately 180° from pinion gear assembly runout O−mark and pin holes aligned.

(b) Use 6796558 drift to seat gear, tap lightly with plastic mallet to make sure gear is seated.

(c) Perform runout check on pitch diameter (PD) of gear.

f. Perform PD runout check as follows:

CAUTION

Be sure front and rear bearing outer ring and rollers serial numbers match inner ring serial numbers.

(1) Install rear bearing outer ring and rollers on rear inner ring.

(2) Press 23034230 compressor onto front outer ring and rollers (to make ring concentric) and install on front inner ring. Remove compressor.

(3) Place pinion gear assembly in two V−blocks (supported on bearings). Set up dial indicator at gear PD. Runout shall be within 0.002 in. FIR.

(4) If runout is acceptable install headed pin and secure with internal retaining ring.

(5) If runout is not acceptable determine and correct cause.

g. Store pinion gear assembly in clean protective container.

Table 4. Pinion Gear Bearing Fit Limits

Description	Minimum	Maximum
Front Bearing (out of round) − Cage	0.0027L	0.0060L
Front Bearing (out of round) − Pinion Shaft Gear (Select)	0.0029T	0.0019T
Rear Bearing − Cage	0.0029L	0.0060L
Rear Bearing − Pinion Shaft Gear	0.0018T	0.0008T

17. PINION GEAR ASSEMBLY − PINION AND ACCESSORY DRIVE SHAFTGEAR ASSEMBLY DYNAMIC BALANCE.

a. Procedure to be determined.

DEPOT MAINTENANCE

INSPECTION, REPAIR, STATIC BALANCE, AND PLASMA SPRAY COATING

MAIN DRIVE GEAR ASSEMBLY

Reference Material

Gears - Inspection . . . . . WP 016 00
Magnetic Particle and Fluorescent Penetrant Inspection - Procedures . . . . . WP 017 00
Plating and Surface Treatment of Parts . . . . . WP 018 00
Anti-Friction Bearings - Maintenance . . . . . WP 138 00
General Installation of Heli-Coil Inserts . . . . . NAVWEPS 02-1-19
Coating, Flame Sprayed, Adhesion or Cohesion of . . . . . ASTM C633-69
Operating Manual (AVCO Plasma Spray Unit) . . . . . ——
Operating Manual (Plasmadyne Plasma Spray Unit) . . . . . ——

Alphabetical Index

Subject **Page No.**

Introduction 2
Main Drive Gear Assembly 2
Bearing Bore Repair 3
Inspection 2
Plasma Spray Coating (Molybdenum) Application 4
Plasma Spray Coating (Molybdenum) Removal 3
Repair 2
Static Balance 9
Sun Gear Hub Flange Mounting Bolt Hole Repair 10

Record of Applicable Technical Directives

None

1. **INTRODUCTION.**

2. This work package (WP) provides the inspection and repair instructions and rework of main drive gear assemblies used in reduction gear assemblies for T56-A-427 turboprop engine.

3. **MAIN DRIVE GEAR ASSEMBLY.**

4. MAIN DRIVE GEAR ASSEMBLY - INSPECTION.

a. Inspect main drive gear assembly. Refer to table 1.

b. Refer to WP 017 00 for magnetic particle inspection (MPI) and fluorescent penetrant inspection (FPI) procedures.

5. MAIN DRIVE GEAR ASSEMBLY - REPAIR.

a. Repair main drive gear assembly. Refer to Disposition column, table 1.

b. Replace main drive gear assemblies not within serviceable limits after repair.

Table 1. Main Drive Gear Assembly - Inspection and Repair

Condition	Serviceable Limits	Repairable Limits	Disposition
MPI or FPI. Crack indications.	No cracks acceptable.	Not repairable.	Condemn gear for any cracks.
Non-metallic inclusion:	No fatigue type progression is evident. Indications shall not be in line, parallel or in close proximity.	Not repairable.	Condemn gear exceeding serviceable limit.
Uneven gear teeth wear. Refer to WP 016 00.	Not serviceable.	Not repairable.	Condemn gear exceeding serviceable limits.
CAUTION			
Main drive gears must be condemned, regardless of condition, if a front or rear pinion bearing failure has occurred with loss or flattening of rollers, or if main drive gear has been painted red by the Intermediate Level and returned to the Depot.			
Failed pinion bearing (front or rear) with loss or flattening roller or raceway wear exceeding 0.032 inch.	Not serviceable.	Not repairable.	Condemn main drive gear.
Gear teeth wear.	Refer to WP 016 00.	Exceeds serviceable limits.	Repair gear per WP 016 00. Check gear balance. Refer to paragraph 9, this WP.
Corrosion pits on gear tooth root, tip or face.	No pits allowed.	Refer to WP 016 00.	Condemn gear exceeding repairable limits.
Spalling: Minute (check for minute spalling using magnification).	Minute spalling is evidenced by a dull matte worn area, neither exceeding 3/4 in. total length nor within 1/2 in. of the gear tooth end. An interrupted area of 1/32 in. max height across the gear tooth width.	Exceeds serviceable limits.	Rework part per WP 016 00. Check gear balance. Refer to paragraph 9, this WP.
Fatigue.	No fatigue spalling acceptable.	Not repairable.	Condemn gear if fatigue spalling exists.

Table 1. Main Drive Gear Assembly - Inspection and Repair (contd)

Condition	Serviceable Limits	Repairable Limits	Disposition
Wear, scoring or grooving on bearing bore.	ID between 8.6624 and 8.6634 in. after blending sharp edges.	Maximum depth of 0.005 in.	Hard chrome plate bore. Refer to paragraph 6, this WP.
Plasma spray coating:			
Visual cracks or crazing cracks in 0.750 in. radius.	Not serviceable.	Any amount.	Remove and reapply coating. Refer to paragraphs 7 and 8, this WP.
Flakes, chips, dents, nicks or blisters.	Not serviceable.	Any amount.	Remove and reapply coating. Refer to paragraphs 7 and 8, this WP.
Loss of coating to base metal.	Not serviceable.	Any amount.	Remove and reapply coating. Refer to paragraphs 7 and 8, this WP.
Stripped threads in sun gear hub flange mounting bolt holes.	Not serviceable.	a. 0.390 in. max hole diameter. b. Total of ten holes max with no more than two holes adjacent to each other at any location.	Repair using helical coil insert. Refer to paragraph 10, this WP. Condemn gear when repaired holes exceed ten total.

6. MAIN DRIVE GEAR ASSEMBLY - BEARING BORE REPAIR. (figure 1)

a. Machine bore removing minimum material for cleanup. Do not exceed 8.674 in.

b. Nital etch per WP 016 00.

c. Bake at 275°F (135°C) for four hours within eight hours of nital etching.

d. Hard chrome plate bore to sufficient thickness to obtain finish dimensions. Refer to WP 018 00.

e. Finish grind bore to 8.6624 - 8.6634 in. and 32 RMS surface texture (figure 1).

f. Plating thickness after finish grinding shall not exceed 0.010 in.

7. MAIN DRIVE GEAR ASSEMBLY - PLASMA SPRAY COATING (MOLYBDENUM) REMOVAL. (figures 2 and 3)

Support Equipment Required

Part No./Type Designation	Nomenclature
Model 255F or 256F	Elcometer thickness gage (CAGE 1 HE42)

Materials Required

Specification No./Part No.	Nomenclature
A-A-1042	Shot, cast steel, SAE 110
MIL-A-21380	Grit, aluminum oxide, size 120 - 220

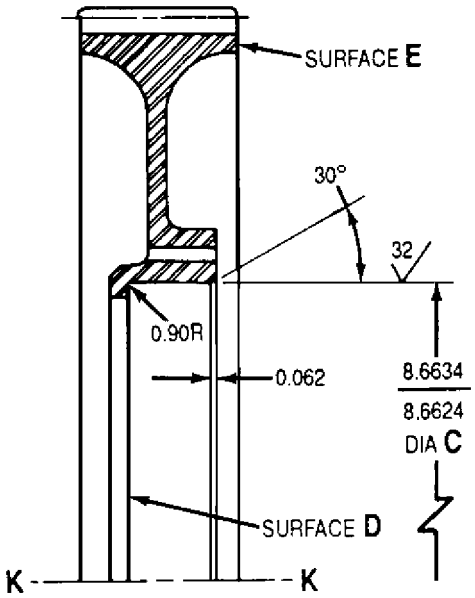

AXIS K – K IS ESTABLISHED BY DIA C AND SURFACE E. DIA C SHALL BE CONCENTRIC AND SURFACE E SHALL BE SQUARE WITH AXIS K – K WITHIN 0.005 INCH FIR. SURFACE D RUNOUT SHALL BE WITHIN 0.001 INCH FIR OF DIA C AND SURFACE E

MLD143XG

Figure 1. Main Drive Gear Assembly - Bearing Bore Repair

NOTE

The following procedure is to be used only if the spray coating must be removed for reprocessing of the main drive gear.

a. Measure thickness of molybdenum coating using Elcometer thickness gage.

CAUTION

Grinding to remove coating is not acceptable. Grinding burns into base metal will damage gear.

b. Using a tape lathe, machine molybdenum coating (figure 2) down to a thickness of 0.001 - 0.003 in. Do not use grinding method.

CAUTION

Avoid excessive grit blasting. Excessive grit basting can reduce web thickness below 0.208 in. minimum thickness. This will cause rejection of the gear.

c. Mask areas not coated (figure 3) and grit blast with 120 - 220 mesh aluminum oxide grit at an air pressure of 60 - 90 psig until all molybdenum coating is removed.

d. Remove mask and visually inspect gear to determine if all molybdenum coating has been removed. If questionable areas remain, use Elcometer thickness gage to verify presence of molybdenum.

e. Measure gear web thickness. If thickness is less than 0.208 in., reject gear.

f. MPI and FPI gear for cracks per WP 017 00. No cracks acceptable. Reject gear if crack indications are present.

g. Mask areas not to be coated and shotpeen using SAE 110 cast steel shot, intensity Almen A6-10.

8. MAIN DRIVE GEAR ASSEMBLY - PLASMA SPRAY COATING (MOLYBDENUM) APPLICATION. (figure 3) The application of molybdenum plasma spray to the main drive gear shall be accomplished either by certified Naval Aviation Depots utilizing automated spray equipment or a facility certified by the OEM.

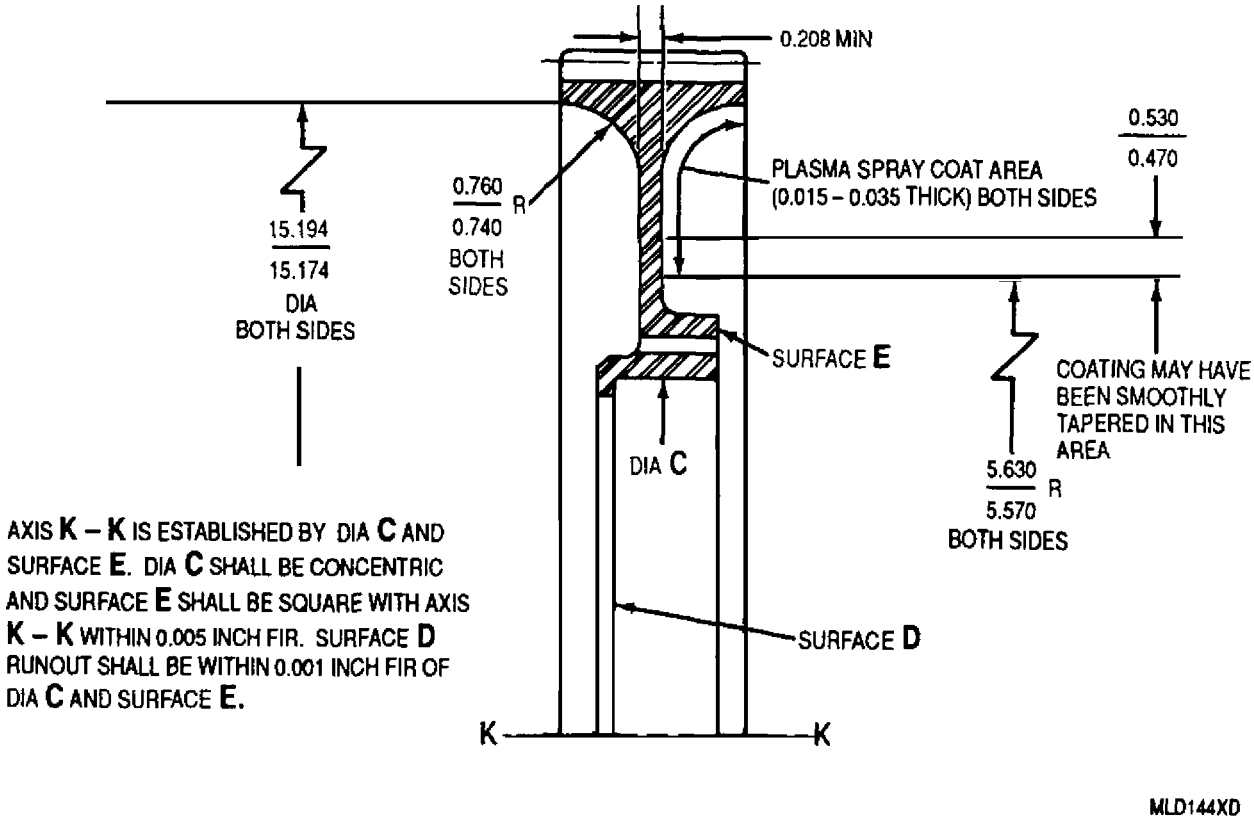

Figure 2. Main Drive Gear Assembly − Plasma Spray Coating (Molybdenum) Removal

Support Equipment Required

Part No./Type Designation	Nomenclature
Model 255F or 256F	Elcometer thickness gage (CAGE 1HE42)
Model PG 100 or	AVCO plasma unit (Bay State Abrasive Div, AVCO corp)
SG−1B or SG−100 or	Plasmadyne spray unit (CAGE 08622)
Type 3M, 7M, 9M, or 10M	METCO plasma spray system (CAGE 4N639)
——	Fixture, automated
——	Brush, wire, stainless steel
——	Disk, sanding
——	Pyrometer, contact
——	Stone
——	Gloves, lint−free

Materials Required

Specification No./Part No.	Nomenclature
AMS 6265 or AMS 6267	Bar, steel
UNCAR MO−102 or	Powder, molybdenum (CAGE OFGH2)
AMDRY 313X or	Powder molybdenum (CAGE 9G886)
Thermotec 18951 or	Powder, molybdenum (CAGE 9G886)
Al−1013	Powder, molybdenum (CAGE 06677)
Metcolite C or	Grit, aluminum oxide
Dynablast No. 16	Grit, aluminum oxide
MIL−T−81533	Trichloroethane, 1, 1, 1
O−A−51	Acetone
——	Cloth, lint−free

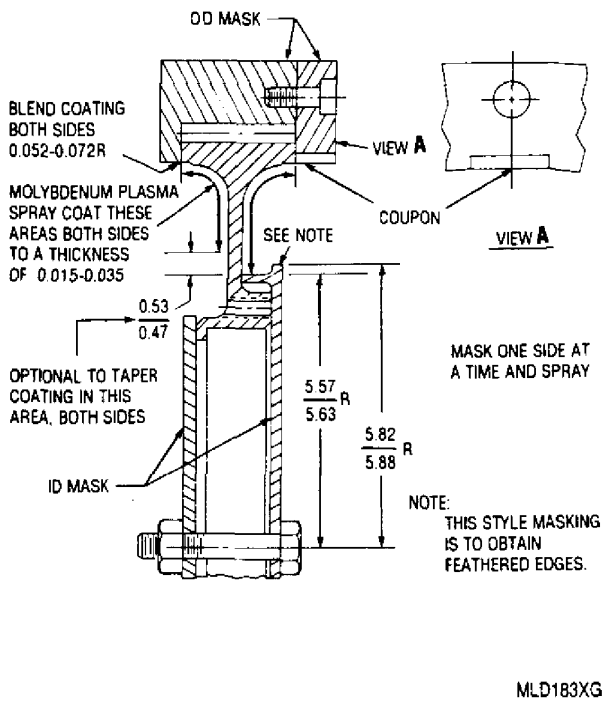

Figure 3. Main Drive Gear Assembly − Plasma Coating (Molybdenum) Application

CAUTION

Established quality control procedures shall be used to ensure the degreasing fluid (1, 1, 1 trichloroethane) is free of contamination. Failure to properly prepare the gear for the spraying operation could result in improper spraybond and subsequent gear failure.

Trichloroethane MIL−T−81533 **10**

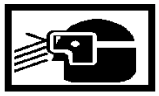

Compressed Air **56**

a. Thoroughly clean gear to remove all dirt, grease, oil or other foreign material by vapor degreasing with MIL−T−81533 1, 1, 1 trichloroethane for a minimum of 30 minutes. Dry gear using clean dry compressed air.

NOTE

Masks shall be adequate to protect against adhesion of the spray material. It is required that two sets of masks be utilized: one for the shot peen and grit blast operations; the other for the plasma spray operation.

b. Fabricate two sets of masks (figure 3) from either steel, brass or other suitable material to adequately protect against adhesion of spray material. One set of masks is to be used for blast/shotpeening and the other set for plasma spraying. Do not interchange the two. The outside diameter (OD) mask used for the spray operation shall provide a place to locate the test coupon.

c. Shotpeen plasma spray area as follows:

(1) Mask areas that are not to be coated (figure 3).

NOTE

The blast/shot peening masks shall be dimensionally inspected every 10 gears to insure mask erosion does not affect the areas processed.

(2) Shotpeen machined groove area using SAE 110 cast steel shot, intensity Almen A6−10.

CAUTION

Avoid excessive grit blasting. Excessive grit blasting can reduce web thickness below 0.208 in. minimum thickness. This will cause rejection of the gear.

d. Grit blast web and radius areas to be coated with aluminum oxide grit Metcolite C or Dynablast Grit No. 16 at 65 − 85 psig for suction type blaster, (45 − 50 psig for pressure type blaster). Adjust pressure as required to obtain 63 RMS surface texture. Grit is to be changed after every two gears.

CAUTION

Care shall be taken to prevent contamination of prepared surfaces. Always handle the prepared gear with clean lint−free gloves.

e. Store gear in protective container to prevent contamination. Gear shall be processed as soon as possible after grit blasting and no longer than two hours after preparation.

f. Prepare a bond test specimen at time of initial production and upon request thereafter as follows:

(1) Fabricate 3 test specimens of AMS 6265 or AMS 6267 steel. Heat treat to Rc30 hardness.

(2) Prior to spraying, vapor degrease and grit blast the specimen. Grit blast should be accomplished to the parameters in step d.

(3) Plasma spray test specimen.

(4) Check bond strength per ASTM C633−69.

(5) Coating thickness shall be 0.015 − 0.035 in.

(6) Minimum bond strength shall be 2500 psi as tested per ASTM C633−69.

(7) Failure of bond test is cause for rejection of the process until a satisfactory test is made.

g. Fabricate two test coupons per gear from AMS 6265 or AMS 6267 steel. Heat treat to Rc30 hardness. The coupons will be processed in the same manner and on the same equipment simultaneously with the gear.

CAUTION

Failure to properly prepare the gear for the plasma spray operation could result in improper bond and subsequent gear failure.

h. Place prepared gear onto an automated fixture that will permit uniform coverage of area to be coated. Install test coupons on the OD mask where provided (figure 3).

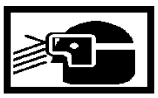

Compressed Air **56**

Acetone O−A−51 **61**

i. Remove any blast dust with clean dry compressed air and wipe prepared surface with a clean lint free cloth dampened with O−A−51 acetone prior to spraying.

j. Preheat gear to 175 − 200°F (79 − 93°C) using either a heater or the plasma flame. Check the gear temperature with a contact pyrometer.

NOTE

The spray angle to the surface to be coated shall be 75 − 105° to obtain acceptable bonding.

k. Apply plasma spray uniformly (one side at a time) to gear web and radius area as shown (figure 3) as follows:

(1) When using METCO plasma spray system, use parameters of table 2.

(2) When using AVCO plasma spray unit, use parameters from operating manual.

(3) When using plasmadyne plasma spray unit, use parameters from operating manual. Plasmadyne rotor−feed powder feeder may be used to attain proper feed rate. Slight adjustment of secondary gas is permitted to attain proper voltage.

Table 2. METCO Plasma Spray System Parameters

Gasses	Argon/Hydrogen			Nitrogen/Hydrogen		
Gun (METCO)	3MB	7MB	9MB	3MB	7MB	9MB
Nozzle	GP	700	732 or GH	G	700	730
Powder Port No.	2	2	2	1	1	1
3M Uni−Jet Ring	Yes	—	—	—	—	—
Gas Pressure (psig)						
Primary	100	100	100	50	50	50
Secondary	55	55	55	50	50	50
Gas Flows (cfh)						
Primary	100	100	100	100	100	100
Secondary	15	15	15	15	15	15
Power						
Arc Amps	550	500	500	400	400	400
Arc Volts	70−75	65−75	65−75	70−80	70 − 80	70−80
Powder Feed Rate (lb/hr)	9.5	9.5	9.5	9.5	9.5	9.5
Spray Distance (in.)	3−4	4−5	4−5	3−4	4.5−5.5	4.5−5.5
Carrier Gas Flow METCO Feeders	37	37	37	37	37	37
Standard Flowmeters	12	12	12	12	12	12

NOTE

METCO 3MP or METCO 4MP powder feeders may be used to attain proper feed rate.
Slight adjustment of secondary gas is permitted in order to attain proper voltage.

(4) Apply plasma spray 0.015 − 0.035 in. thick to gear web and radius area.

(5) Measure coating using Elcometer thickness gage.

l. Remove gear from automated fixture and remove masks. Remove masks carefully to avoid damaging coating.

m. Remove test coupon from OD mask. Serialize coupon on uncoated side. Use the serial number of the gear that the coupon represents.

n. Visually inspect coating. Coating shall be:

(1) One hundred percent bonded over complete area.

(2) Be uniform in thickness (0.015 − 0.035 in.).

(3) Be free of blisters, chips and other objectionable imperfections.

o. If coating is unsatisfactory, remove plasma spray per paragraph 7, this WP, and reapply.

p. Repeat plasma spray process for opposite side of gear.

q. Blend coating to a 0.052 − 0.072 in. radius at each rim face (figure 3) using hand sanding or hand stone. Remove loose particles on coating surface and edges with stainless steel wire brush.

CAUTION

The test coupons shall be subjected to following analysis before the gear is released for service.

r. Two serialized (same as gear serial number) test coupons were processed with each gear. All coupons shall be subjected to the following laboratory analysis.

(1) Test coupons shall be metallographically examined by magnification at 100X for:

(a) Freedom from cracks.

(b) Freedom from separation within the coating or between the coating and base metal.

(2) Coating shall be measured for uniform thickness (0.015 − 0.035 in.).

(3) Surface hardness shall not be lower than 81.0 HR30T. Hardness check shall be made on a surface that has had 0.003 − 0.005 in. removed by machining or polishing to provide a smooth surface. Final hardness is determined as an average of 3 − 5 hardness readings.

(4) Failure of a test coupon for any of the above limits will require that the gear, represented by that coupon, be reprocessed.

(5) Gear is reprocessed by removing plasma spray per paragraph 7, this WP, and reapplying.

s. Static balance gear. Refer to paragraph 9, this WP.

9. MAIN DRIVE GEAR ASSEMBLY − STATIC BALANCE. (figure 4)

Support Equipment Required

Part No./Type Designation	Nomenclature
23037905 or	Adapter, balance
6797915	Adapter, collet
6796797	Machine, balance, vertical rotating static

Materials Required

Specification No./Part No.	Nomenclature
AN565FC624H6 or AN565FC624H8 or AN565FC624H10 or AN565FC624H12 or	Setscrew, headless socket (AR)
6820289−06 or 6820289−08 or 6820289−10 or 6820289−12	Screw, headless set (AR)

a. Install 23037905 balance adapter or 6797915 collet adapter on 6796797 balance machine.

b. Install gear, front face up, on balance/collet adapter.

c. Gear shall be in static balance about Axis K−K. Axis K−K is established by Diameter C and Surface E (figure 4).

d. Static balance gear to within one ounce−in. as follows:

NOTE

The thread size of the balance setscrew holes and sun gear hub flange holes are the same. Do not confuse these holes when installing setscrews.

(1) Whenever possible, use existing tapped balance setscrew holes to balance gear. Install appropriate setscrews (bottomed) as required to meet balance requirement. If gear is balanced, stake setscrews in place.

(2) When additional setscrew locations are required for balance, tap one or more holes marked L (figure 4) at appropriate locations.

(3) Tap additional holes as follows:

(a) PN 23031597 gear − Hole size is 0.333 in. Tap 0.375−24 UNJF 3B thread to 0.72 − 0.78 in. deep.

(b) Remove any resulting high metal at entrance thread using a fine stone.

(4) Install setscrews to bottom and stake in place (figure 4).

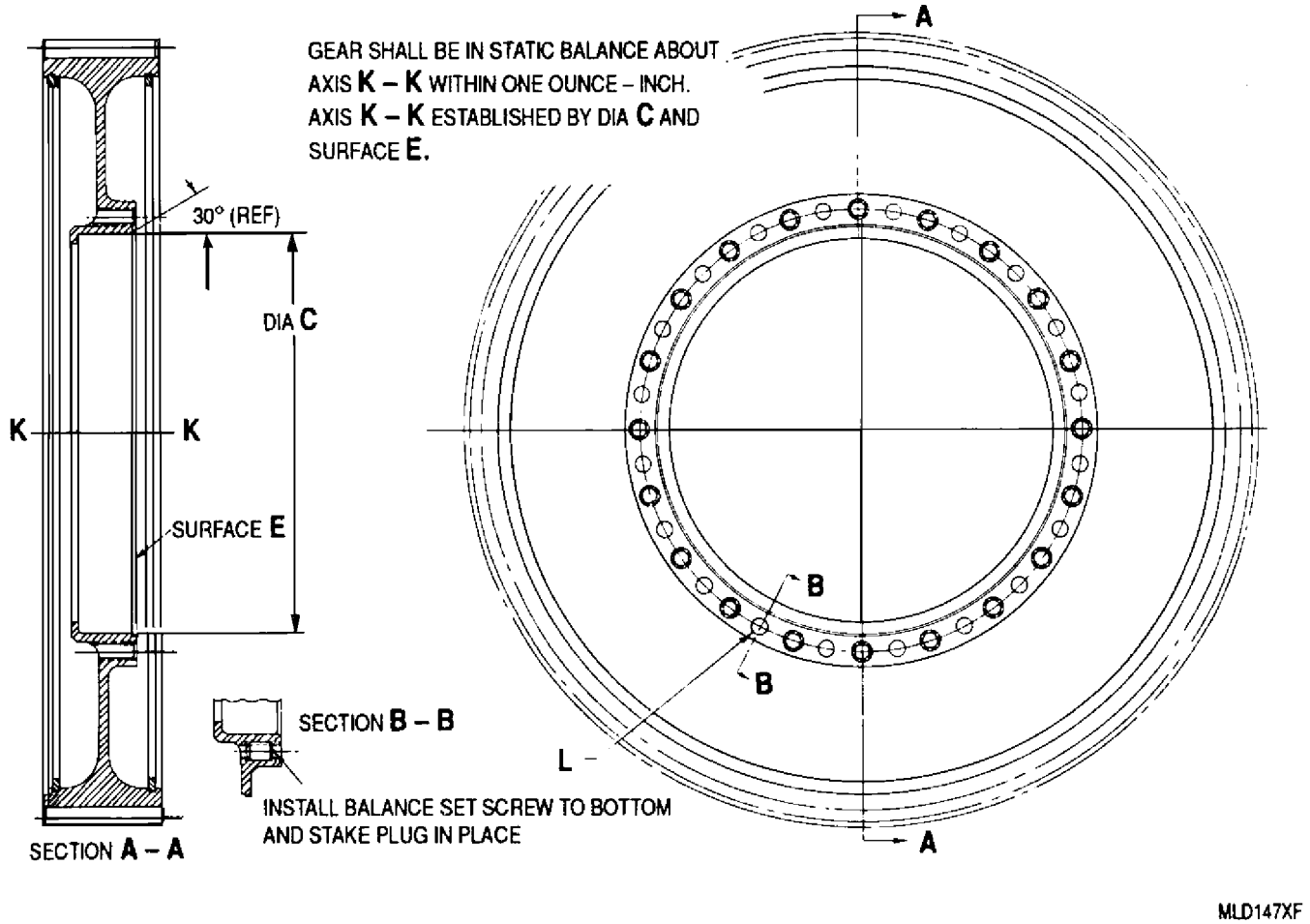

Figure 4. Main Drive Gear Assembly − Static Balance

10. MAIN DRIVE GEAR ASSEMBLY − SUN GEAR HUB FLANGE MOUNTING BOLT HOLE REPAIR.

Materials Required

Specification No./Part No.	Nomenclature
MS124778	Insert, helical coil (AR)

NOTE

The 20 tapped mounting bolt holes are equally spaced (18°) on the 9.4375 in. bolt hole circle.

a. Remove damaged material using an appropriate sized drill. Hole diameter after cleanup shall be 0.384 − 0.390 in. and located within 0.005 in. radius of true position on the 9.4375 in. bolthole circle.

b. Countersink hole 90° to a diameter of 0.420 − 0.450 in. and tap hole for MS124778 helical coil insert. Install insert. Refer to NAVWEPS 02−1−19.

DEPOT MAINTENANCE

INSPECTION AND REPAIR

FRONT REVERSE TORQUE INDICATOR PLATE
REAR REVERSE TORQUE INDICATOR RING

Reference Material

Magnetic Particle and Fluorescent Penetrant Inspection − Procedures . . . . . WP 017 00

Alphabetical Index

Subject **Page No.**

Front Reverse Torque Indicator Plate 2
  Inspection 2
  Repair 2
Introduction 2
Rear Reverse Torque Indicator Ring 2
  Inspection 2
  Repair 2

Record of Applicable Technical Directives

None

1. **INTRODUCTION.**

2. This work package (WP) provides inspection and repair instructions for the front reverse torque indicator plate and rear reverse torque indicator ring used in reduction gear assemblies on T56−A−427 turboprop engine.

3. **FRONT REVERSE TORQUE INDICATOR PLATE.**

4. FRONT REVERSE TORQUE INDICATOR PLATE − INSPECTION.

a. Inspect front reverse torque indicator plate. Refer to table 1.

b. Refer to WP 017 00 for magnetic particle inspection (MPI) procedures.

5. FRONT REVERSE TORQUE INDICATOR PLATE − REPAIR.

a. Repair front reverse torque indicator plate. Refer to Disposition column, table 1.

b. Replace front reverse torque indicator plates not within serviceable limits after repair.

Table 1. Front Reverse Torque Indicator Plate − Inspection and Repair

Condition	Serviceable Limits	Repairable Limits	Disposition
MPI indications.	No cracks acceptable.	Not repairable.	Condemn plate exceeding serviceable limits.
Front and Rear faces:	Not serviceable.	Any amount.	
Nicks, scratches, and dents			Remove raised metal using fine stone.

6. **REAR REVERSE TORQUE INDICATOR RING.**

7. REAR REVERSE TORQUE INDICATOR RING − INSPECTION.

a. Inspect rear reverse torque indicator ring. Refer to table 2.

b. Refer to WP 017 00 for magnetic particle inspection (MPI) procedures.

8. REAR REVERSE TORQUE INDICATOR RING − REPAIR.

a. Repair rear reverse torque indicator ring. Refer to Disposition column, table 2.

b. Replace rear reverse torque indicator rings not within serviceable limits after repair.

Table 2. Rear Reverse Torque Indicator Ring − Inspection and Repair

Condition	Serviceable Limits	Repairable Limits	Disposition
MPI indications.	No cracks acceptable.	Not repairable.	Condemn plate exceeding serviceable limits.
Front and Rear faces:			
Nicks, scratches, and dents.	Not serviceable.	Any amount.	Remove raised metal using fine stone.

DEPOT MAINTENANCE

INSPECTION AND REPAIR

RING GEAR
RING GEAR COUPLING
RING GEAR INTERMEDIATE COUPLING
HELICAL SPLINE COUPLING
NEGATIVE TORQUE SYSTEM SPLINE RING
RING GEAR FRONT, INTERMEDIATE, AND REAR RETAINING SPRINGS

Reference Material

Gears − Inspection . . . . . WP 016 00
Magnetic Particle and Fluorescent Penetrant Inspection − Procedures . . . . . WP 017 00

Alphabetical Index

Subject **Page No.**

Helical Spline Coupling 3
  Inspection 3
  Repair 3
Introduction 2
Negative Torque System Spline Ring 4
  Inspection 4
  Repair 4
Ring Gear 2
  Inspection 2
  Repair 2
Ring Gear Coupling 2
  Inspection 2
  Repair 2
Ring Gear Front, Intermediate, and Rear Retaining Springs 5
  Inspection 5
  Inspection for Distortion 5
  Repair 5
Ring Gear Intermediate Coupling 3
  Inspection 3
  Repair 3

Record of Applicable Technical Directives

None

1. **INTRODUCTION.**

2. This work package (WP) provides the inspection and repair instructions for the ring gears, ring gear couplings, ring gear intermediate coupling, helical spline couplings, negative torque system spline rings, and ring gear front, intermediate and rear retaining springs used in reduction gear assemblies on T56−A−427 turboprop engines.

3. **RING GEAR.**

4. RING GEAR − INSPECTION.

a. Inspect ring gear. Refer to table 1.

b. Refer to WP 017 00 for magnetic particle inspection (MPI) procedure.

5. RING GEAR − REPAIR.

a. Repair ring gear. Refer to Disposition column, table 1.

b. Replace ring gears not within serviceable limits after repair.

Table 1. Ring Gear − Inspection and Repair

Condition	Serviceable Limits	Repairable Limits	Disposition
MPI indications:	Non−metallic indications where no fatigue−type progression is evident. Indications shall not be in line, parallel or in close proximity.	Not repairable.	Condemn gear exceeding serviceable limits.
Cracks.	Not serviceable.	Not repairable.	Condemn coupling exceeding serviceable limits.
Gear teeth scuffing or spiking.	Healing or wear off of metal pickup or pile−up.	Any metal pickup or pile−up.	Remove metal pickup or pile−up by polishing.
Gear Teeth:			
Wear.	Max wear of 0.003 in. per tooth side.	Not repairable.	Condemn gear exceeding serviceable limits.
Corrosion.	No pits allowed.	Not repairable.	Condemn gear exceeding serviceable limits.
Non−Gear Teeth Areas:			
Corrosion, fretting, pitting, nicks.	Max depth of 0.003 in. without sharp edges. Damaged area shall be less than 1.000 in. diameter. No “chain link” pattern.	Max depth of 0.010 in. Damaged area shall be less than 1.000 in. diameter. No chain−link pattern.	Blend to maximum depth of 0.010 in.

6. **RING GEAR COUPLING.**

7. RING GEAR COUPLING − INSPECTION.

a. Inspect ring gear coupling. Refer to table 2.

b. Refer to WP 017 00 for magnetic particle inspection (MPI) procedure.

8. RING GEAR COUPLING − REPAIR.

a. Repair ring gear coupling. Refer to Disposition column, table 2.

b. Replace ring gear couplings not within serviceable limits after repair.

Table 2. Ring Gear − Inspection and Repair

Condition	Serviceable Limits	Repairable Limits	Disposition
MPI indications:	Non−metallic indications where no fatigue−type progression is evident. Indications shall not be in line, parallel or in close proximity.	Not repairable.	Condemn coupling exceeding serviceable limits.
Cracks.	Not serviceable.	Not repairable.	Condemn coupling exceeding serviceable limits.
Spline teeth scuffing or spiking.	Healing or wear off of metal pickup or pile−up.	Any metal pickup or pile up.	Remove metal pickup or pile−up by polishing.
Spline teeth wear.	Maximum wear of 0.008 in. per tooth side.	Not repairable.	Condemn coupling exceeding serviceable limits.

9. **RING GEAR INTERMEDIATE COUPLING.**

10. RING GEAR INTERMEDIATE COUPLING − INSPECTION.

a. Inspect ring gear intermediate coupling. Refer to table 3.

b. Refer to WP 017 00 for magnetic particle inspection (MPI) procedure.

11. RING GEAR INTERMEDIATE COUPLING − REPAIR.

a. Repair ring gear intermediate coupling. Refer to Disposition column, table 3.

b. Replace ring gear intermediate couplings not within serviceable limits after repair.

Table 3. Ring Gear Intermediate Coupling − Inspection and Repair

Condition	Serviceable Limits	Repairable Limits	Disposition
MPI indications:	Non−metallic indications where no fatigue−type progression is evident. Indications shall not be in line, parallel or in close proximity.	Not repairable.	Condemn coupling exceeding serviceable limits.
Cracks.	Not serviceable.	Not repairable.	Condemn coupling exceeding serviceable limits.
Spline teeth scuffing spiking.	Healing or wear off of metal pickup or pile−up.	Any metal pickup or pile−up.	Remove metal pickup or pile−up by polishing.
Spline teeth wear.	Max wear of 0.002 in. per tooth side.	Not repairable.	Condemn coupling exceeding serviceable limits.

12. **HELICAL SPLINE COUPLING.**

13. HELICAL SPLINE COUPLING − INSPECTION.

a. Inspect helical spring coupling. Refer to table 4.

b. Refer to WP 016 00 for magnetic particle inspection (MPI) procedure.

14. HELICAL SPLINE COUPLING − REPAIR.

a. Repair helical spline coupling. Refer to Disposition column, table 4.

b. Replace helical spline couplings not within serviceable limits after repair.

Table 4. Helical Spline Coupling − Inspection and Repair

Condition	Serviceable Limits	Repairable Limits	Disposition
MPI indications:	Non−metallic indications where no fatigue−type progression is evident. Indications shall not be in line, parallel or in close proximity.	Not repairable.	Condemn coupling exceeding serviceable limits.
Cracks.	Not serviceable.	Not repairable.	Condemn coupling exceeding serviceable limits.
Spline teeth scuffing or spiking.	Healing or wear off of metal pickup or pile−up.	Any metal pickup or pile−up.	Remove metal pickup or pile−up by polishing.
Spline teeth wear.	Max wear of 0.003 in. per tooth side for both internal and external teeth.	Any metal pickup.	Remove metal pickup by polishing.
Front face wear, caused by contact with negative torque indicator plungers.	Max depth of 0.005 in. No rough edges or metal build−up. Remove raised metal.	Not repairable.	If depth of wear exceeds 0.005 in., tag coupling “Reindex at Assembly.”

15. **NEGATIVE TORQUE SYSTEM SPLINE RING.**

16. NEGATIVE TORQUE SYSTEM SPLINE RING − INSPECTION.

a. Inspect negative torque system spline ring. Refer to table 5.

b. Refer to WP 017 00 for magnetic particle inspection (MPI) procedure.

17. NEGATIVE TORQUE SYSTEM SPLINE RING − REPAIR.

a. Repair negative torque system spline ring. Refer to Disposition column, table 5.

b. Replace negative torque system spline rings not within serviceable limits after repair.

Table 5. Negative Torque System Spline Ring − Inspection and Repair

Condition	Serviceable Limits	Repairable Limits	Disposition
MPI indications.	Non−metallic indications where no fatigue−type progression is evident. Indications shall not be in line, parallel or in close proximity.	Not repairable.	Condemn coupling exceeding serviceable limits.
Cracks.	Not serviceable.	Not repairable.	Condemn coupling exceeding serviceable limits.
Spline teeth scuffing or spiking.	Healing or wear off of metal pickup or pile−up.	Any metal pickup or pile−up.	Remove metal pickup or pile−up by polishing.
Spline teeth wear.	Maximum wear of 0.003 in. per tooth side.	Any metal pickup.	Remove all metal pickup by polishing.

18. **RING GEAR FRONT, INTERMEDIATE, AND REAR RETAINING SPRINGS.**

19. RING GEAR FRONT, INTERMEDIATE, AND REAR RETAINING SPRINGS − INSPECTION.

a. Inspect front, intermediate, and rear retaining springs. Refer to table 6.

b. Refer to WP 017 00 for magnetic particle inspection (MPI) procedure.

20. RING GEAR FRONT, INTERMEDIATE, AND REAR RETAINING SPRINGS − REPAIR.

a. Repair front, intermediate, and rear retaining springs. Refer to Disposition column, table 6.

b. Replace front, intermediate, and rear retaining springs not within serviceable limits after repair.

Table 6. Front, Intermediate, and Rear Retaining Springs − Inspection and Repair

Condition	Serviceable Limits	Repairable Limits	Disposition
MPI for cracks.	Not serviceable.	Not repairable.	Condemn spring.
Distortion (wave form and contour).	Refer to paragraph 21, this WP.	Refer to paragraph 21, this WP.	Refer to paragraph 21, this WP.
Wear step.	Not serviceable.	0.005 in. max step.	Blend step using fine stone. After blending, visually inspect under 10X magnification. No cracks acceptable, condemn spring.

21. RING GEAR FRONT, INTERMEDIATE, AND REAR RETAINING SPRINGS − INSPECTION FOR DISTORTION.

a. Use a new spring as the master gage for each part number spring being inspected.

b. Place spring being inspected on top of applicable master. Spring is acceptable providing wave form and contour does not vary more than 0.032 in. from master.

c. Condemn springs exceeding distortion limit.

DEPOT MAINTENANCE

INSPECTION AND REPAIR

ACCESSORY DRIVE SHAFTS AND SMALL GEARS

Reference Material

Magnetic Particle and Fluorescent Penetrant Inspection − Procedures . . . . . WP 017 00
Plating and Surface Treatment of Parts . . . . . WP 018 00
Internal and External Spline − Repair . . . . . WP 047 00

Alphabetical Index

Subject **Page No.**

Accessory Drive Shafts and Small Gears 2
Inspection 2
Repair 2
Introduction 2

Record of Applicable Technical Directives

None

1. **INTRODUCTION.**

2. This work package (WP) provides the inspection and repair instructions for accessory drive shafts and small gears used in the accessory drive housing and reduction gear assembly on the T56−A−427 turboprop engine.

3. **ACCESSORY DRIVE SHAFTS AND SMALL GEARS.**

4. ACCESSORY DRIVE SHAFTS AND SMALL GEARS − INSPECTION.

a. Inspect drive shafts and small gears. Refer to table 1.

b. Refer to WP 017 00 for magnetic particle inspection (MPI) procedure.

5. ACCESSORY DRIVE SHAFTS AND SMALL GEARS − REPAIR.

Support Equipment Required

Part No./Type Designation	Nomenclature
——	Stylus, 0.0001 in. maximum radius

a. Repair drive shafts and small gears. Refer to Disposition column, table 1.

b. Replace drive shafts and small gears not within serviceable limits after repair.

Table 1. Accessory Drive Shafts and Small Gears − Inspection and Repair

Condition	Serviceable Limits	Repairable Limits	Disposition
MPI indications of non−metallic inclusion on small gears and gear shafts.	Light scattered non−metallic indications parallel to the material flow lines and not exceeding 3/8 in. in length and not extending into a radius hole, spline root or breaking across threads.	Not repairable.	Condemn part exceeding serviceable limits.
MPI indications of cracks.	Not serviceable.	Not repairable.	Condemn part exceeding serviceable limits.
Grinding checks on bearing shaft thrust shoulders.	Checks not breaking an edge or extending into a radius.	Not repairable.	Condemn part exceeding serviceable limits.
Accessory drive shaft seal journal wear.	0.003 in. max wear on journal with an evenly polished surface in seal contact area without lead or axial marking.	0.005 in. max wear on journal diameter.	Hard chrome plate seal journal (WP 018 00) Grind journal to print limits. 90% of journal peak to valley heights, when measured with a 0.0001 in. maximum radius stylus, shall occur within a 0.00045 in. band.

Table 1. Accessory Drive Shafts and Small Gears − Inspection and Repair (contd)

Condition	Serviceable Limits	Repairable Limits	Disposition
Scoring, grooves, nicks, gouges, scuffing or minute flats on shaft seal journal surfaces.	Evenly polished surface in seal contact without lead or axial marking.	Damage contributing to oil seal leakage.	Hard chrome plate seal journal (WP 018 00) Grind journal to print limits. 90% of journal peak to valley heights, when measured with a 0.0001 in. maximum radius stylus, shall occur within a 0.00045 in. band.
Wear in internal socket of tachometer drive shaft.	Maximum depth of wear is 0.010 in., indicated from an unworn surface.	Not repairable.	Condemn part exceeding serviceable limits.
Internal spline silver plate flaking, chipping, or visual wear.	Not serviceable.	Any amount.	Silver plate splines. Refer to WP 047 00.

DEPOT MAINTENANCE

INSPECTION AND REPAIR

INTERNAL AND EXTERNAL SPLINES

Reference Material

Magnetic Particle and Fluorescent Penetrant Inspection − Procedures . . . . . WP 017 00
Plating and Surface Treatment of Parts . . . . . WP 018 00
Drive Shaft Plugs − Replacement . . . . . WP 048 00
Plating, Nickel, Electroless . . . . . AMS 2404
Plating, Chromium, Hard Deposit . . . . . AMS 2406
Plating, Silver, Copper Strike, Low Bake . . . . . AMS 2412

Alphabetical Index

Subject **Page No.**

Internal and External Splines 2
  Compressor Side Gear Internal Spline Repair 6
  External Spline Pitch Diameter Measurement − Alternate Method 7
  External Splines Inspection 6
  External Splines Repair 7
  Internal Spline Pitch Diameter Measurement − Alternate Method 2
  Internal Splines Inspection 2
  Internal Splines Repair 2
Introduction 2

Record of Applicable Technical Directives

None

1. **INTRODUCTION.**

2. This work package (WP) provides the inspection and repair instructions for internal and external splines of components used in the T56−A−427 turboprop engine.

3. **INTERNAL AND EXTERNAL SPLINES.**

4. INTERNAL SPLINES − INSPECTION.

Support Equipment Required

Part No./Type Designation	Nomenclature
6799576	Gage kit, internal spline PD dial bore
6799577	Gage kit, internal spline PD dial bore
6799578	Gage kit, internal spline PD dial bore
6799579	Gage kit, internal spline PD dial bore

a. Inspect internal splines of shafts and gears. Refer to table 1 and following steps.

b. Obtain internal spline pitch diameter (PD) dimension from blueprint of part to be inspected.

c. Refer to table 2 for gage kit applicable to PD of spline being checked. Measure PD as follows:

(1) Setup the gage details using information on data plate located inside case.

(2) Use applicable detail master to zero out dial indicator.

(3) Check spline wear to limits of table 1.

(4) When gage kits are not available, refer to paragraph 5, this WP for alternate method to measure PD.

5. INTERNAL SPLINE PITCH DIAMETER MEASUREMENT − ALTERNATE METHOD. The maximum PD limits provided in table 3 were calculated by allowing 0.002 in. wear from minimum blueprint spline thickness.

Support Equipment Required

Part No./Type Designation	Nomenclature
——	Balls, gage
——	Bore gage, dial indicator

a. Refer to table 3 for data applicable to part to be inspected.

b. Using specified diameter balls (or equal size gage ball ends) and appropriate dial indicator bore gage, measure PD between balls at four places equally spaced. Average the four dimensions.

c. Average PD dimension shall not exceed limit shown. Condemn parts exceeding limit.

6. INTERNAL SPLINES − REPAIR. Repair (plate) internal splines of shafts and gears (except compressor side gear). Refer to Disposition column, table 1.

Table 1. Internal Splines − Inspection and Repair

Condition	Serviceable Limits	Repairable Limits	Disposition
Gear spline wear: All internal splines (except compressor side gear). Refer to paragraph 4 or 5, this WP.	Unplated splines: Not serviceable. Previously plated splines: No wear through plating.	Maximum gage reading of 0.015 in. without abnormal variation or steps, or does not exceed limit of table 3.	Plate gear internal spline: Apply flash coating of chrome plate (AMS 2406) or electroless nickel (AMS 2404), to a thickness of 0.0005−0.001 in. Refer to WP 018 00.
Shaft spline wear: All internal splines Refer to paragraph 4 or 5, this WP.	Unplated splines: Not serviceable. Previously plated splines: No wear through plating.	Maximum gage reading of 0.015 in. without abnormal variation or steps, or does not exceed limit of table 3.	Shaft internal splines: Remove internal plugs (WP 048 00). Apply silverplate (AMS 2412) except ends of teeth. Bake at 265−285°F (129 − 141°C) for three hours. Plating thickness shall be 0.0001−0.0003 in. Install internal plugs (WP 048 00).
Compressor side gear internal spline wear. Refer to paragraph 4 or 5, this WP.	Unplated splines: Not serviceable. Previously plated splines: No wear through plating.	Maximum gage reading of 0.005 in. without abnormal variation or steps, or does not exceed limit of table 3.	Repair gear internal spline. Refer to paragraph 7, this WP.

Table 2. Parts to Internal Spline Gage Kits − Application

Gage Kit PN Part Nomenclature	Pitch Dia	Head	Adapter	Range Extension	Master	Pitch	No. of Teeth	Ball Size
6799576 − Gage Kit								
Gear − Oil Pump Idler	0.3438	−2	N/A	−3	−11	32/64	11	0.0540
Gear − Diffuser Pump Drive	0.3438	−2	N/A	−3	−11	32/64	11	0.0540
Gear − Oil Pump Drive	0.3438	−2	N/A	−3	−11	32/64	11	0.0540
Gear − Pressure Oil Pump Drive	0.4375	−2	N/A	−4	−12	32/64	14	0.0540
Shaft − Oil Pump Drive	0.4375	−2	N/A	−4	−12	32/64	14	0.0540
Shaft − Oil Pump Drive	0.4687	−2	NIA	−4	−13	32/64	15	0.0540
Gear − Pump Drive	0.5000	−2	N/A	−16	−14	32/64	16	0.0540
Gear − Compressor Side	0.5000	−2	N/A	−16	−14	32/64	16	0.0540
Shaft − Accessory Main Drive	0.6000	−5	N/A	−6	−15	20/40	12	0.0864
Shaft − Side Accessory Drive	0.6000	−5	N/A	−6	−15	20/40	12	0.0864

Table 2. Parts to Internal Spline Gage Kits − Application (contd)

Gage Kit PN Part Nomenclature	Pitch Dia	Head	Adapter	Range Extension	Master	Pitch	No. of Teeth	Ball Size
6799577 − Gage Kit								
Gear − Spur, tack and Oil Pump	0.6250	−2	N/A	−3	−12	32/64	20	0.0540
Gear − Diffuser, Pump Internal	0.6250	−2	N/A	−3	−12	32/64	20	0.0540
Shaftgear − Accessory Drive Side	0.8000	−5	NIA	−6	−14	20/30	16	0.0864
Shaftgear−1/4 Square Drive	0.8750	−2	N/A	−4 & 11	−15	32/64	28	0.0540
Gear − Spur, Internal Spline	0.8750	−2	N/A	−4 & 11	−15	32/64	28	0.0540
Gear − Center Accessory Drive	1.0625	−2	N/A	−4 & two 11	−13	32/64	34	0.0540
6799578 − Gage Kit								
Shaft − Hydraulic Pump Drive	1.2000	−5	N/A	−4	−15	20/30	24	0.0864
Shaft − Starter	1.2000	−5	N/A	−4	−15	20/30	24	0.0864
Shaft − Generator Drive	1.2000	−5	N/A	−4	−15	20/30	24	0.0864
Gear − Spur, Hydraulic Pump Drive	1.6875	−7	N/A	−6	−16	16/32	27	0.1080
Gear − Spur, Tach Drive Take−off	1.6875	−7	N/A	−6	−16	16/32	27	0.1080
Gear − Alternator Drive	1.6875	−7	N/A	−6	−16	16/32	27	0.1080
Gear − Spur, Hydraulic Pump Idler Drive	1.6875	−7	N/A	−6	−16	16/32	27	0.1080
Coupling − Safety, Inner Member	1.9375	−7	−10	−8	−17	16/32	31	0.1080
Wheel − Compressor First−stage	1.9375	−7	−10	−8	−17	16/32	31	0.1080
Shaft − Compressor Extension	1.9375	−7	−10	−8	−17	16/32	31	0.1080
Coupling −Turbine Coupling Shaft	2.1875	−7	−10	−9	−18	16/32	57	0.1080
Adapter − Turbine Coupling	2.1875	−7	−10	−9	−18	16/32	57	0.1080
Member − Prop Brake Outer	2.2500	−7	−10	−9	−19	16/32	36	0.1080

Table 2. Parts to Internal Spline Gage Kits − Application (contd)

Gage Kit PN Part Nomenclature	Pitch Dia	Head	Adapter	Range Extension	Master	Pitch	No. of Teeth	Ball Size
6799579 − Gage Kit								
Gear − Sun	3.5000	−2	N/A	−3	−14	8/16	28	0.2160
Flange − Sun Gear Hub	3.5000	−2	N/A	−3	−14	8/16	28	0.2160
Coupling − Shaft, Turbine	3.5625	−6	N/A	−5	−16	16/32	57	0.1080
Coupling − Turbine Coupling Shaft	3.5625	−6	N/A	−5	−16	16/32	57	0.1080
Lock − Prop Shaft Thrust Nut	4.7500	−6	N/A	−20	−28	16/64	76	0.1080
Lock − Prop Shaft Thrust Nut	5.3125	−8	N/A	−9	−19	32/64	170	0.0540

Table 3. Internal Spline Pitch Diameter Measurement − Alternate Method

Part Nomenclature	Part No.	Pitch Dia	No. of Teeth	Pitch	Ball Size	Maximum Repair Dim.
Shaft − Oil Pump Drive	6720969	0.4687	15	32/64	0.0540	0.39910
Shaftgear − Accy Main Drive	6731183	0.6000	12	20/40	0.0864	0.4844
Gear − Center Accy Drive	6738408	1.0625	34	32/64	0.0540	0.9939
Shaft − Side Accy Drive	6782790	0.6000	12	20/40	0.0864	0.4844
Gear − Pressure, Oil Pump Drive	6784958	0.4375	14	32/64	0.0540	0.3674
Ring − NTS Spline	6786734	16.3279	107	8/16	0.2160	16.0655
Shaftgear − Accy Drive Side	6787344	0.8000	16	20/30	0.0864	0.6865
Lock − Prop Shaft Thrust Nut	6788713	5.3125	170	32/64	0.0540	5.2459
Lock − Prop Shaft Thrust Nut	6788713	4.7500	76	16/64	0.1080	4.6114
Adapter − Turbine Coupling	6791113	2.1875	35	16/32	0.1080	2.0400
Coupling − Turbine Shaft	6791129	3.5625	57	16/32	0.1080	3.4233
Coupling − Engine to TM	6792067−01	1.4890	46	32/64	0.0540	1.3643
	6792067−02	1.4890	46	32/64	0.0540	1.3652
	6792067−03	1.4890	46	32/64	0.0540	1.3661
	6792067−04	1.4890	46	32/64	0.0540	1.3672
Shaft − Compressor Extension	6793016	1.9375	31	16/32	0.1080	1.7895
Gear − Tack Drive Take−off	6824041	1.6875	27	16/32	0.1080	1.5381
Gear − Tack and Oil Pump Drive	6824043	0.6250	20	32/64	0.0540	0.5561
Shaft Assy − Hyd Pump Drive	6825237	1.2000	24	20/30	0.0864	1.0871
Shaft Assy − Alt Drive	6825238	1.2000	24	20/30	0.0864	1.0871

Table 3. Internal Spline Pitch Diameter Measurement − Alternate Method (contd)

Part Nomenclature	Part No.	Pitch Dia	No. of Teeth	Pitch	Ball Size	Maximum Repair Dim.
Gear − Compressor Side	6827849	0.5000	16	32/64	0.0540	0.4310
Shaft − Starter	6825667	1.2000	24	20/30	0.0864	1.0871
Gear − Spur, Hyd Pump Drive	6829390	1.6875	27	16/32	0.1080	1.5381
Gear − Spur, Alternator Drive	6829393	1.6875	27	16/32	0.1080	1.5381
Wheel − Compressor First−Stage	6841211	1.9375	31	16/32	0.1080	1.7895
Gear − Sun	6841222	3.5000	28	8/16	0.2160	3.1982
Member − Safety Coupling Inner	6842120	1.9375	31	16/32	0.1080	1.7895
Member − Prop Brake Outer	6842446	2.2500	36	16/32	0.1080	2.1037
Coupling − Compressor Shaft	6843873	2.1875	35	16/32	0.1080	2.0400
Coupling − Compressor Shaft	6843873	3.5625	57	16/32	0.1080	3.4162
Adapter − Turbine Coupling	6844756	2.3125	37	16/32	0.1080	2.1651
Shaft − Oil Pump Drive	6846749	0.4375	14	32/64	0.0540	0.3693
Flange − Sun Gear Hub	6873360	3.5000	28	8/16	0.2160	3.1982
Gear − Int Spline Spur	23001425	0.8750	28	32/64	0.0540	0.8063

7. COMPRESSOR SIDE GEAR − INTERNAL SPLINE REPAIR (figure 1).

Support Equipment Required

Part No./Type Designation	Nomenclature
6799671	Broach, compressor side gear spline
6799672	Mask, compressor side gear spline plating
6799697	Fixture, compressor side gear internal spline broach

a. Mount the side gear in the 6799697 side gear internal spline broach fixture (figure 2).

b. Clean up worn spline using 6799671 side gear spline broach (figure 3).

c. Magnetic particle inspect (MPI) side gear. Refer to WP 017 00.

d. Prior to plating, clean part thoroughly.

e. Install 6799672 plating mask (figure 4) over the side gear.

f. Electroless nickel plate spline area (WP 018 00). Bake part at 330−350°F (166−177°C) for four hours.

g. Inspect spline (figure 1) as follows:

(1) PD of spline shall be concentric with PD of gear and bearing journal within 0.002 in. FIR.

(2) PD of spline shall be within 0.490−0.510 in.

(3) RD of spline shall be within 0.561−0.541 in.

(4) ID of spline shall be within 0.469−0.474 in.

8. EXTERNAL SPLINES − INSPECTION.

Support Equipment Required

Part No./Type Designation	Nomenclature
6799783	Gage kit, external spline PD retractable dial snap
6799784	Gage kit, external spline PD retractable dial snap

a. Inspect external splines. Refer to table 4 and following steps.

b. Obtain external spline pitch diameter (PD) dimension from blueprint of part to be inspected.

c. Refer to table 5 for gage kit applicable to PD of spline being checked. Measure PD as follows:

(1) Setup the gage details using information on data plate located inside case.

(2) Use applicable detail master to zero out dial indicator.

(3) Check spline wear to limits of table 4.

(4) When gage kits are not available, refer to paragraph 9 for alternate method to measure PD.

9. EXTERNAL SPLINE PITCH DIAMETER MEASUREMENT − ALTERNATE METHOD. The minimum PD limits provided in table 6 were calculated by allowing 0.002 in. wear from minimum blueprint spline thickness.

Support Equipment Required

Part No./Type Designation	Nomenclature
——	Micrometers, outside
——	Pins, gage

a. Refer to table 6 for data applicable to part to be inspected.

b. Using specified diameter pins and appropriate micrometer, measure PD at four places equally spaced. Average the four measurements.

c. Average PD dimension shall not exceed limit shown. Condemn parts exceeding limit.

10. EXTERNAL SPLINES− REPAIR. Repair external splines. Refer to Disposition column, table 4.

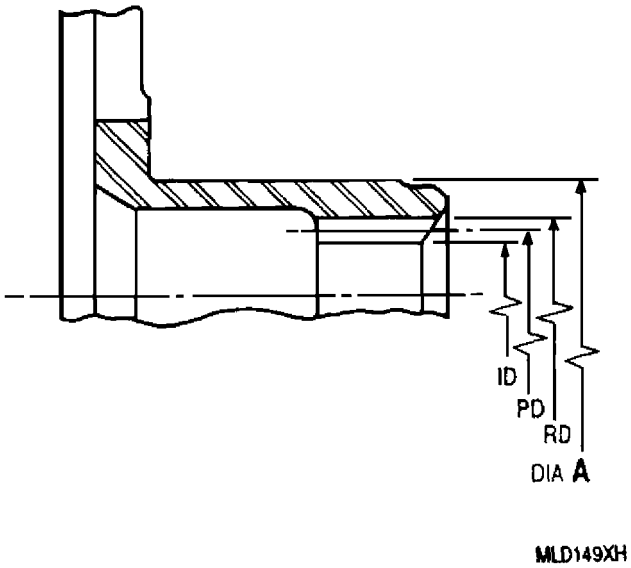

Figure 1. Compressor Side Gear − Internal Spline Repair

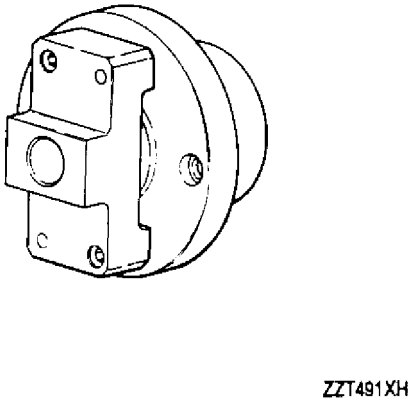

Figure 2. 6799697 Compressor Side Gear Internal Spline Broach Fixture

ZZT489XJ

Figure 3. 6799671 Compressor Side Gear Spline Broach

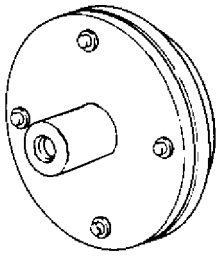

ZZT490XJ

Figure 4. 6799672 Compressor Side Gear Spline Plating Mask

Table 4. External Splines − Inspection and Repair

Condition	Serviceable Limits	Repairable Limits	Disposition
Spline wear:			
All external splines. Refer to paragraph 8 or 9, this WP.	No wear through plating.	Minor Repair. Average of four gage readings does not exceed 0.002 in. with no single reading exceeding 0.003 in. or does not exceed limit of table 6.	Plate spline: Silver plate splines (AMS 2412) except ends of teeth. Bake at 265−285°F (129−141°C) for three hours. Plating thickness shall be 0.0001−0.0003 in.
		Major repair. Average gage reading exceeds 0.002 in. but no one reading exceeds 0.005 in.	Repair plate splines: Clean up spline by grinding, 0.006 in. maximum. Electroless nickel plate (AMS 2404) spline to size (except ends of teeth); then apply silver plate (AMS 2412). Bake at 265−285°F (129−141°C) for three hours. Plating thickness shall be 0.0001−0.0003 in.

Table 5. Parts to External Spline Gage Kits − Application

Gage kit PN Part Nomenclature	Pitch Dia.	Contact	Spacer	Master	Pitch	No. of Teeth	Ball Size
6799783 Gage kit							
Shaftgear − Scavenge, Oil Pump	0.3437	−2	N/A	−4	32/64	11	0.0540
Shaftgear − Oil Pump Idler	0.3437	−2	N/A	−4	32/64	11	0.0540
Gearshift − Spur, Scavenge Pump Drive	0.3437	−2	N/A	−4	32/64	11	0.0540
Shaft − Rear, Scavenge Pump Drive Gear	0.3750	−2	N/A	−5	32/64	12	0.0540
Shaftgear − Oil Pump Drive	0.4375	−2	N/A	−6	32/64	14	0.0540
Gear − Spur, Oil Pump Drive	0.4375	−2	N/A	−13	32/64	15	0.0540
Shaftgear −Oil Pump Drive	0.4687	−2	NIA	−7	32/64	15	0.0540
Gear − Oil Pump Drive	0.5000	−2	N/A	−8	32/64	16	0.0540
Shaftgear − Accessory, Main Drive	0.5000	−2	N/A	−8	32/64	16	0.0540
Gear − Spur, Nose Scavenge Pump Drive	0.5000	−2	N/A	−8	32/64	16	0.0540
Shaft − Oil Pump Drive	0.6000	− 3	N/A	−10	20/30	12	0.0864
Shaft − Tachometer Drive	0.6250	−2	N/A	−9	32/64	20	0.0540
Shaft − Oil Pump Drive	0.6250	−2	N/A	−9	32/64	20	0.0540
Shaftgear − Diffuser, Pump Intermediate	0.6250	−2	N/A	−14	32/64	20	0.0540
Shaftgear − Accessory Drive Side	0.8750	−2	N/A	−11	32/64	28	0.0540
Shaft − Accessory Main Drive	1.0625	−2	N/A	−12	32/64	34	0.0540
6799784 Gage kit							
Shaft − Hydraulic Pump Drive	1.6875	−2	−6	−7	16/32	27	0.1080
Shaft − Alternator Drive	1.6875	−2	−6	−7	16/32	27	0.1080
Shaft − Generator Drive	1.6875	−2	−6	−7	16/32	27	0.1080
Shaft − Compressor Extension	1.9375	−2	−6	−8	16/32	31	0.1080
Coupling − Engine to Torquemeter	1.9375	−2	−6	−8	16/32	31	0.1080
Shaftgear − Spur, Pinion	1.9375	−2	−6	−16	16/32	31	0.1080
Wheel − First−Stage Turbine	2.1875	−2	−6	−9	16/32	35	0.1080
Wheel − Fourteenth−Stage Compressor	2.1875	−2	−6	−17	16/32	35	0.1080
Gear − Spur, Starter	2.2500	−2	−6	−10	16/32	36	0.1080
Hub − Sun Gear	3.5000	−3	−5	−18	8/16	28	0.2160
Shaft − Turbine Coupling	3.5625	−2	−5	−15	16/32	57	0.1080
Adapter − Turbine Coupling	3.5625	−2	−5	−15	16/32	57	0.1080
Member − Safety Coupling Inner	4.3750	−3	N/A	−13	8/16	35	0.2160
Shaft − 60A Prop	4.5714	−4	N/A	−14	7/16	32	0.2468

Table 6. External Spline Pitch Diameter Measurement − Alternate Method

Part Nomenclature	Part No.	Pitch Dia	No. of Teeth	Pitch	Ball Size	Maximum Repair Dim.
Shaft − Oil Pump Drive	6720969	0.6000	12	20/40	0.0864	0.7094
Shaftgear Acct Main Drive	6731183	1.0625	34	32/64	0.0540	1.1503
Coupling − Ring Gear	6786556	15.3750	123	8/16	0.2160	15.6653
Coupling − Ring Gear	6786556	16.6667	100	6 (SPCL)	0.2880	17.0457
Shaftgear − Accy Drive Side	6787344	0.8750	28	32/64	0.0540	0.9626
Shaftgear − Oil Pump Drive	6789695	0.4687	15	32/64	0.0540	0.5530
Shaftgear − Oil Pump Drive	6789695	0.4375	14	32/64	0.0540	0.5252
Adapter − Turbine Coupling	6791113	3.5625	57	16/32	0.1080	3.7050
Coupling − Engine to TM	6792067	1.9375	31	16/32	0.1080	2.0815
Shaft − Compressor Extension	6793016	1.9375	31	16/32	1.1080	2.0831
Shaftgear − Accy Main Drive	6793309	0.5000	16	32/64	0.0540	0.5872
Hub − Sun Gear	6793516	3.5000	28	8/16	0.2160	3.7818
Turb Scav Oil Pump Dr.	6823347	0.3750	12	32/64	0.0540	0.4619
Shaft Assy − Hyd Pump Drive	6825237	1.6875	27	16/32	0.1080	1.8303
Shaft Assy − Alternator Drive	6825238	1.6875	27	16/32	0.1080	1.8303
Gear − Nose Scav Pump Drive	6829388	0.5000	16	32/64	0.0540	0.5865
Gear − Starter	6829394	2.2500	36	16/32	0.1080	2.3959
Member − Safety Coupling Inner	6842120	3.5575	28	7.87/16.1	0.2195	3.8266
Shaftgear Assy − Pinion	6844208	1.9375	31	16/32	0.108	2.0815
Adapter − Turbine Coupling	6844756	3.5625	57	16/32	0.1080	3.7050
Shaft Asst − Tack Drive	6846747	0.6250	20	32/64	0.0540	0.7125
Shaft − Oil Pump Drive	6846749	0.6250	20	32/64	0.0540	0.7125
Shaft − Turbine Coupling	6846907	3.5625	57	16/32	0.1080	3.7050
Nut − Prop Shaft Thrust Bearing	6847254	5.3125	170	32/64	0.0540	5.3973
Wheel − Fourteenth−Stage Compressor	6858624	2.1875	35	16/32	0.1080	2.3289
Wheel − First−stage Turbine	6859201	2.1875	35	16/32	0.1080	2.3319
Wheel − First−stage Turbine	6875431	2.3125	37	16/32	0.1080	2.4556
Shaftgear − Pump Drive Int Spur	6876478	0.5000	16	32/64	0.0540	0.5865
Shaft − Propeller	6877513	4.5714	32	7/16	0.2468	4.8972

DEPOT MAINTENANCE

REPLACEMENT

OIL SEAL PLUG
(SHAFTS AND GEARS)

Reference Material

None

Alphabetical Index

Subject **Page No.**

Introduction 2
Oil Seal Plug Replacement 2
Hydraulic Pump and Generator Drive Shaft 2
Hydraulic Pump Idler Drive Shaftgear 3
Side Accessory Drive Shaft 3
Tachometer Drive Gear 2
Tachometer Drive Shaft 2

Record of Applicable Technical Directives

None

1. **INTRODUCTION.**

2. This work package (WP) provides the instructions for replacing oil seal plugs in drive shafts and gears used in the reduction gear assembly and accessory drive housing on T56−A−427 turboprop engine.

3. **OIL SEAL PLUG REPLACEMENT.**

4. TACHOMETER DRIVE SHAFT OIL SEAL PLUG − REPLACEMENT (figure 1)

a. Remove plug from shaft inside diameter (ID) using a soft drift and arbor press.

b. Remove all burrs and rough spots from ID.

NOTE

The outside diameter (OD) of the oil seal plug is tapered. Diameter B (open end) is used to select a plug that will provide the correct tight fit.

c. Measure ID of gear. Select a plug size (figure 1) that will provide a 0.001 − 0.003 in. tight fit with shaft ID.

d. Install plug using a soft drift and arbor press.

5. TACHOMETER DRIVE GEAR OIL SEAL PLUG − REPLACEMENT. (figure 1)

a. Remove plug from gear ID using a soft drift and arbor press.

b. Remove all burrs and rough spots from ID.

NOTE

The OD of oil seal plug is tapered. Diameter B (open end) is used to select a plug that will provide the correct tight fit.

c. Measure ID of gear. Select a plug size (figure 1) that will provide a 0.001 − 0.003 in. tight fit with gear ID.

d. Install plug using a soft drive and arbor press.

6. HYDRAULIC PUMP AND GENERATOR DRIVE SHAFT OIL SEAL PLUGS − REPLACEMENT. (figure 2)

a. Remove plug from shaft ID using a soft drift and arbor press.

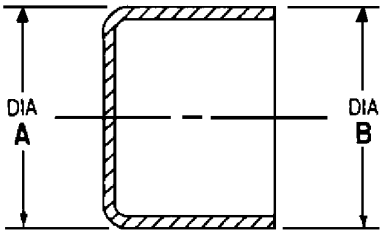

MLD151XJ

PART NO.	DIA A	DIA B	OVERSIZE DIM.
18326	0.372–0.373	0.378–0.379	None
18326 P010	0.382–0.3833	0.388–0.389	+0.010
TACHOMETER DRIVE SHAFTS			
19144	0.747–0.748	0.753–0.754	None
19144	0.752–0.753	0.758–0.759	+0.005
19144	0.757–0.758	0.763–0.764	+0.010
19144	0.762–0.763	0.768–0.769	+0.015
19144	0.767–0.768	0.773–0.774	+0.020
TACHOMETER DRIVE GEAR			

Figure 1. Tachometer Drive Shaft and Drive Gear − Oversize Plug Sizes

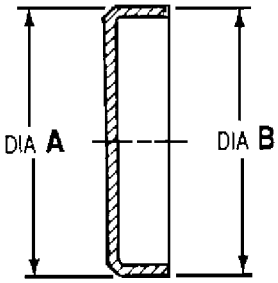

MLD150XH

PART NO.	DIA A	DIA B	OVERSIZE DIM.
6705924	1.309–1.310	1.314–1.315	None
6705924	1.314–1.315	1.319–1.320	+0.005
6705924	1.319–1.320	1.324–1.325	+0.010
6705924	1.324–1.325	1.329–1.330	+0.015
6705924	1.329–1.330	1.334–1.335	+0.020

Figure 2. Hydraulic Pump and Generator Drive Shaft − Oversize Plug Sizes

b. Remove all burrs and rough spots from ID.

NOTE

The OD of oil seal plug is tapered. Diameter B (open end) is used to select a plug that will provide the correct tight fit.

c. Measure ID of shaft. Select a plug size (figure 2) that will provide a 0.002 − 0.005 in. tight fit with shaft ID.

d. Install plug using a soft drift and arbor press.

7. HYDRAULIC PUMP IDLER DRIVE SHAFTGEAR OIL SEAL PLUG − REPLACEMENT. (figure 2)

NOTE

The shaftgear is a detail of the alternator drive gear assembly.

a. Remove plug from shaftgear ID using a soft drift and arbor press.

b. Remove all burrs and rough spots from ID.

NOTE

The OD of oil seal plug is tapered. Diameter B (open end) is used to select a plug that will provide the correct tight fit.

c. Measure ID of shaftgear. Select a plug size (figure 2) that will provide a 0.002 − 0.005 in. tight fit with shaftgear ID.

d. Install plug using a soft drift and arbor press.

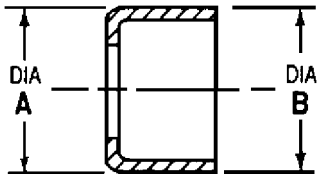

MLD152XJ

PART NO.	DIA A	DIA B	OVERSIZE DIM.
6782685	0.747–0.748	0.753–0.754	None
6782685	0.752–0.753	0.758–0.759	+0.005
6782685	0.757–0.758	0.763–0.764	+0.010
6782685	0.762–0.763	0.768–0.769	+0.015
6782685	0.767–0.768	0.773–0.774	+0.020

Figure 3. Side Accessory Drive Shaft − Oversize Plug Sizes

8. SIDE ACCESSORY DRIVE SHAFT OIL SEAL PLUG − REPLACEMENT. (figure 3)

a. Remove plug from shaft ID using a soft drift and arbor press.

b. Remove all burrs and rough spots from ID.

NOTE

The OD of the oil seal plug is tapered. Diameter B (open end) is used to select a plug that will provide the correct tight fit.

c. Measure shaft ID. Select a plug size (figure 3) that will provide a 0.001 − 0.003 in. tight fit with shaft ID.

d. Install plug using a soft drift and arbor press.

DEPOT MAINTENANCE

INSPECTION AND REPAIR

SPRING TENSION WASHERS
(PROPELLER SHAFT BELLEVILLE SPRINGS)

Reference Material

Magnetic Particle and Fluorescent Penetrant Inspection − Procedures . . . . . WP 017 00
Plating and Surface Treatment of Parts . . . . . WP 018 00

Alphabetical Index

Subject **Page No.**

Introduction 2
Spring Tension Washers 2
Inspection 2
Repair 2

Record of Applicable Technical Directives

None

1. **INTRODUCTION.**

2. This work package (WP) provides the inspection and repair instructions for the spring tension washers (propeller shaft Belleville springs) used in reduction gear assemblies on the T56−A−427 turboprop engine.

3. **SPRING TENSION WASHERS.**

4. SPRING TENSION WASHERS − INSPECTION.

a. Inspect spring tension washers. Refer to table 1.

b. Refer to WP 017 00 for magnetic particle inspection (MPI) procedure.

5. SPRING TENSION WASHERS − REPAIR.

a. Repair spring tension washers. Refer to Disposition column, table 1.

b. Replace washers not within serviceable limits after repair.

Table 1. Spring Tension Washers − Inspection and Repair

Condition	Serviceable Limits	Repairable Limits	Disposition
MPI. Crack indications.	Not serviceable.	Not repairable.	Condemn washer.
Galling or pitting on faces.	Not serviceable.	Light and scattered galling or pitting 0.001 in. max depth.	Polish out galling and pitting.
		Light and scattered galling or pitting 0.005 in. max depth.	Polish out galling and pitting. Silver plate (AMS 2412) to 0.0001−0.0003 in. thick. Refer to WP 018 00.
Dents or bending.	Not serviceable.	Not repairable.	Condemn washer.

DEPOT MAINTENANCE

INSPECTION AND REPAIR

PLANET REAR CARRIER

Reference Material

Gears − Inspection . . . . . WP 016 00
Magnetic Particle and Fluorescent Penetrant Inspection − Procedures . . . . . WP 017 00
Plating and Surface Treatment of Parts . . . . . WP 018 00
Identification Marking Methods . . . . . AS 478

Alphabetical Index

Subject **Page No.**

Introduction 2
Planet Rear Carrier 2
Inspection 2
Flange and Planet Gear Bores Repair 3
Flange Repair 3
Planet Gear Bores Repair 3
Planetary Gear Bore Repair 5
Bearing Journal Repair 5
Repair 2

Record of Applicable Technical Directives

None

1. **INTRODUCTION.**

2. This work package (WP) provides the instructions for inspection and repair of planet rear carrier P/N 6858182 used in reduction gear assemblies for the T56−A−427 turboprop engine.

3. **PLANET REAR CARRIER.**

4. REAR CARRIER − INSPECTION.

a. Inspect rear carrier. Refer to table 1.

b. Refer to WP 017 00 for magnetic particle inspection (MPI) procedures.

5. REAR CARRIER − REPAIR.

a. Repair rear carrier. Refer to Disposition column, table 1.

b. Replace rear carriers not within serviceable limits after repair.

Table 1. Planet Rear Carrier − Inspection and Repair

Condition	Serviceable Limits	Repairable Limits	Disposition
MPI Indications:			
Cracks.	Not serviceable.	Not repairable.	Condemn carrier exceeding serviceable limits.
Loss of silver plating on flange:			Restore silver plate (AMS2412). Refer to paragraph 7, this WP.
By peeling.	Not serviceable.	Any peeling.	
By wear.	Slight loss of plating due to normal wear in area of planet gear bores (either side of flange).	Extreme or abnormal wear shall be repaired.	Restore silver plate (AMS2412). Refer to paragraph 7, this WP.
By minor nicks, scratches or fretting.	Not serviceable.	0.002 in. max depth or covering a max of 20% of contacting surface (mating with journal nut).	Remove damage within repairable limit by light polishing or blending or repair per paragraph 7, this WP.
Dents or nicks in threads.	Not serviceable.	0.020 in. max depth.	Blend out by stoning or other appropriate method. Blended area on any thread shall not exceed 10% of circumference or extend below minor diameter of thread.
Bearing journal damage.	Not serviceable.	6.2795 in. minimum diameter after removal of damage.	Remove slight damage by polishing. Repair journal per paragraph 9, this WP.
Worn planet gear bores.	2.188 in. max.	Exceeds serviceable limits.	Repair damaged bores. Refer to paragraph 8, this WP.
Gear rub wear on inner edge of flange front face.	0.005 in. max depth. Blend to remove sharp edges.	Exceeds serviceable limits.	Repair to within serviceable limit per figure 1.
Locking key slot wear or damage.	0.505 in. max width and 0.256 max axial length.	Not repairable.	Electrical discharge machine (EDM) new slot 180° from original slot per figure 3. Scallop original slot to prevent reuse.

6. PLANET REAR CARRIER − FLANGE AND PLANET GEAR BORES REPAIR. When both the planet gear bores and rear carrier flange require repair, the gear bores should be repaired first.

7. Flange Repair. (figures 1 and 2)

NOTE

The planet gear position numbers and their respective circumferential deviation measurements may be obliterated when the silver plate is stripped.

a. Record (chart) each planet gear position number and its circumferential deviation measurement. This data will be required to re−mark the flange after repair.

b. Strip silver plate from flange Surfaces C and D per WP 018 00 (figure 1).

c. Grind Surfaces C and D as necessary to remove nicks, pitting, scratches, or fretting. The following limits apply:

(1) Maximum material removal shall not exceed 0.005 in.

(2) Surface texture after grinding shall be 32 RMS or finer.

(3) Smooth and polish all sharp edges.

(4) Case hardness after grinding shall be 15N85 minimum.

d. Surfaces Band D shall be square with Diameter A within 0.002 in. FIR. Surface C shall be parallel to Surface D within 0.001 in. FIR.

e. Rinse carrier in clean running water for 30 − 60 seconds. Immerse in clean hot water (160°F (71°C) minimum) for ten seconds minimum.

Compressed Air **56**

f. Dry carrier using clean compressed air.

g. Silver plate ground areas within enclosed area limits per WP 018 00 (figure 1). Plating thickness shall be 0.0001 − 0.0003 in.

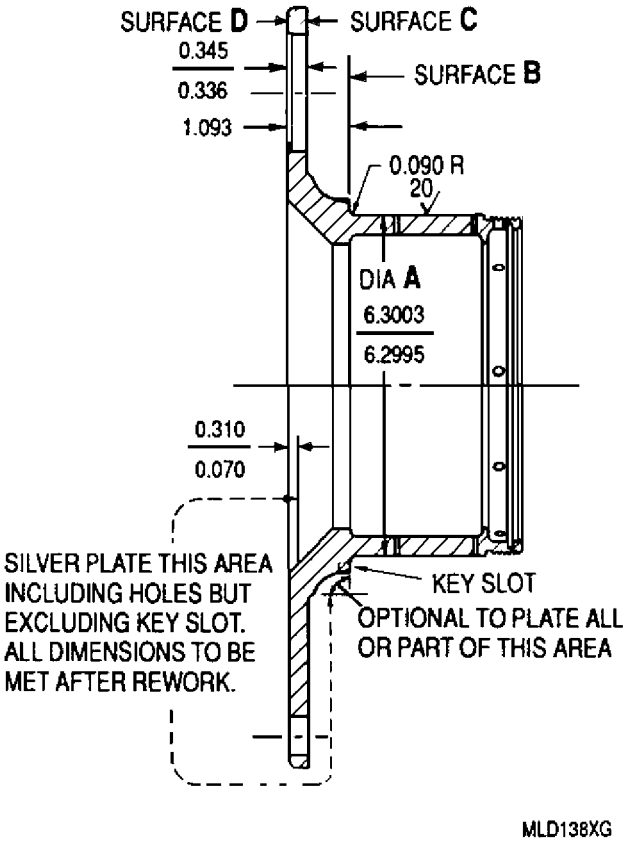

Figure 1. Planet Rear Carrier Flange and Bearing Journal − Repair

h. If necessary, re−mark each planet gear position number and its circumferential deviation measurement at original locations (figure 2). Use controlled shallow vibro peen method 2EI. Refer to AS 478.

8. Planet Gear Bores − Repair. (figures 1 and 2)

NOTE

The planet gear position numbers and their circumferential deviation measurements may be obliterated when the silver plate is stripped.

a. Record (chart) each planet gear position number and its circumferential deviation measurement. This data will be required to re−mark the flange after repair.

b. Strip silver plate from flange Surfaces C and D per WP 018 00 (figure 1).

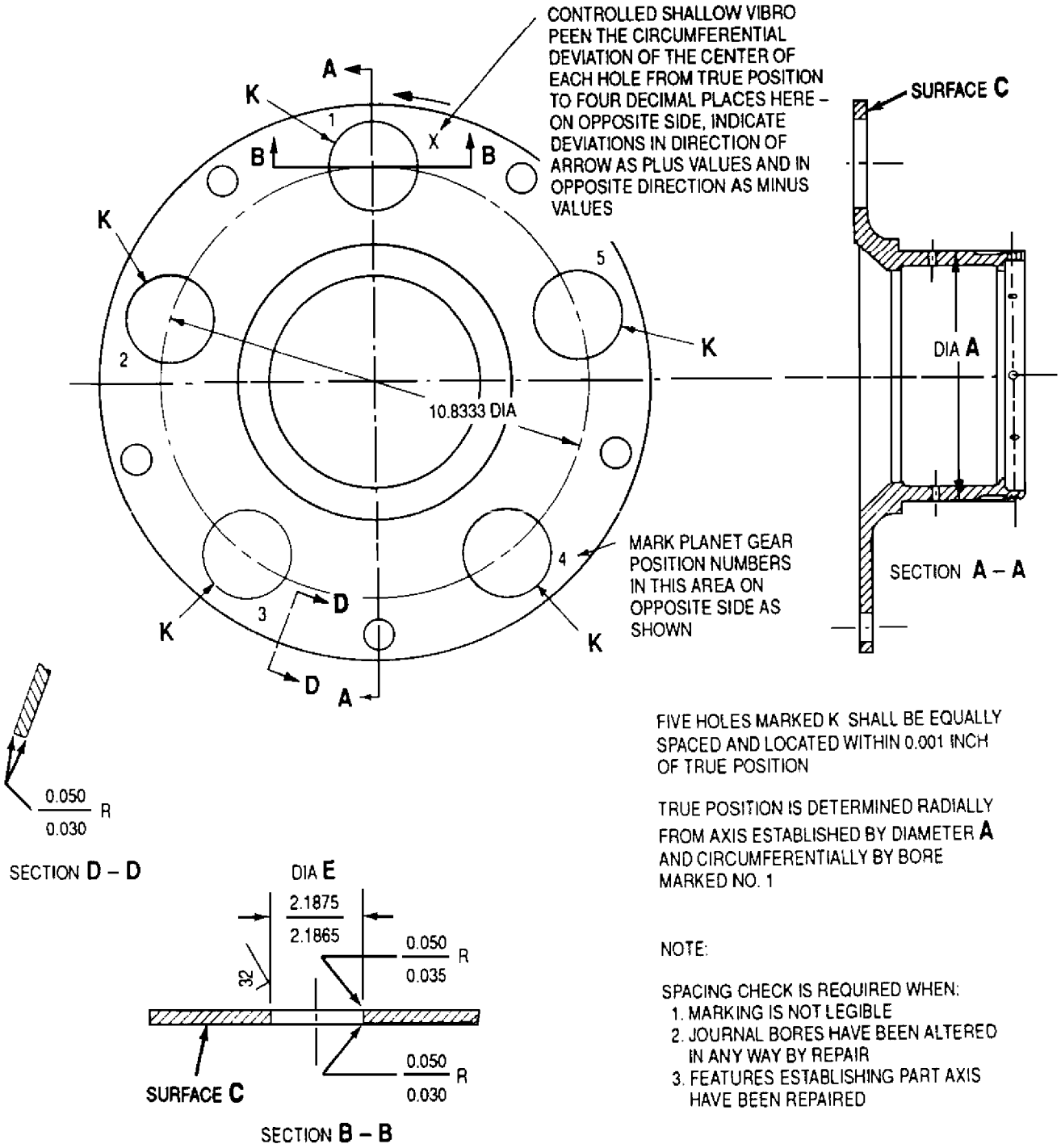

Figure 2. Rear Carrier Planet Gear Bores − Repair

c. Machine damaged bore(s) as required to remove wear. Do not exceed 2.1965 in. Maintain spacing and true position as indicated in figure 2. Case hardness after machining shall be 15N85 minimum.

d. Magnetic particle or fluorescent penetrant inspect per WP 017 00 for cracks and craze lines after machining. No cracks or craze lines are acceptable.

e. Electroless nickel plate bores per WP 018 00 to sufficient thickness to obtain finish dimensions.

f. Finish machine plated bores to limits of figure 2. Maintain spacing and true position of bores. Plating thickness shall not exceed 0.005 in.

g. Rinse carrier in clean running water for 30−60 seconds. Immerse in clean hot water (160°F (71°C) minimum) for ten seconds minimum.

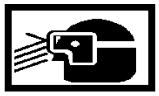

Compressed Air **56**

h. Dry carrier using clean compressed air.

i. Silver plate flange enclosed area per WP 018 00 (figure 1). Plating thickness shall be 0.0001 − 0.0003 in.

j. Check bore spacing and circumferential deviation (figure 2). If the deviation has changed for a specific bore, this new deviation will be used when re−marking the flange.

k. If necessary, re−mark each planet gear position number and its circumferential deviation measurement at original locations (figure 2). Use controlled shallow vibro peen method 2El. Refer to AS 478.

9. PLANETARY GEAR BORE REPAIR.

a. Strip silver plate from flange per WP 018 00.

b. Grind planet gear bores k concentric with axis established by prop shaft diameters A and B or rear carrier diameter A, remove minimum material. Plating thickness after final grind must not exceed 0.005 in. and the parameters below:

(1) Continuously flood the work piece with filtered coolant.

(2) Use a freshly dressed wheel and a surface speed not more than 6500 surface feet per minute (SFPM).

(3) Do not exceed a feed rate of 0.0002 in. per pass.

c. Nital etch the ground surface per WP 016 00 and inspect for grinding burns. Reject any shafts that have been burned.

d. Within eight hours after nital etch, bake parts at 375 +/− 25 degrees Fahrenheit (175 − 204°C) for four hours to relieve hydrogen embrittlement.

e. Magnetic particle inspect per paragraph WP 017 00 ground planet gear bores for cracks. Reject any shafts that have been cracked.

f. Chrome plate ground planet gear bores per WP 018 00. Deposit a plating thickness 0.003−0.004 in. greater than the intended final thickness.

g. Grind to finish dimension per applicable figure 1 or 2, this WP while following the parameters below:

(1) Continuously flood the work piece with filtered coolant.

(2) Use a freshly dressed wheel and a surface speed no more than 6500 SFPM (surface feet per minute).

(3) Do not exceed a feed rate of 0.0002 in. per pass.

h. Reestablish hole deviation per applicable figure 1 or 2, this WP.

i. Stress relieve at 375 +/− 25 degrees Fahrenheit (175 − 204°C) for four hours.

j. Magnetic particle inspection per WP 017 00 planet gear bore for cracks. Reject any shaft that is cracked.

k. Reapply silver plating to flange as required.

10. PLANET REAR CARRIER − BEARING JOURNAL REPAIR. (figure 1)

Support Equipment Required

Part No./Type Designation	Nomenclature
——	Gloves, insulated

a. Grind bearing journal (Diameter A, figure 1) to minimum depth required to remove damage or existing chrome plate. Do not reduce diameter to less than 6.2795 in. Leave a minimum of 0.125 in. of original diameter at each end of journal.

b. Nital etch inspect for grinding burns when base metal is removed. Refer to WP 016 00.

c. Stress relieve carrier within four hours of grinding. Stress relieve at 475−525° F (246−274°C) for two hours in neutral atmosphere.

WARNING

Heated parts will cause skin damage (burns). Use clean insulated gloves to handle parts.

d. Remove carrier from oven. Allow to cool to room temperature. Lightly polish to remove heat scale.

e. Magnetic particle or fluorescent penetrant inspect carrier. Refer to WP 017 00.

f. Mask areas not to be chrome−plated.

g. Chrome plate repair area. Refer to WP 018 00.

h. Finish grind to limits shown (figure 1). Diameter A shall meet the following limits:

(1) Surfaces B and D shall be square with axis of Diameter A within 0.002 in. FIR.

(2) Plating thickness shall not exceed 0.010 in.

(3) Surface texture shall be 32 RMS or finer.

i. Visually inspect required area for craze lines or cracks. None allowed.

j. Identify the repaired carrier by marking letter P after the carrier serial number. Use controlled shallow vibro peen method 2EI. Refer to AS 478.

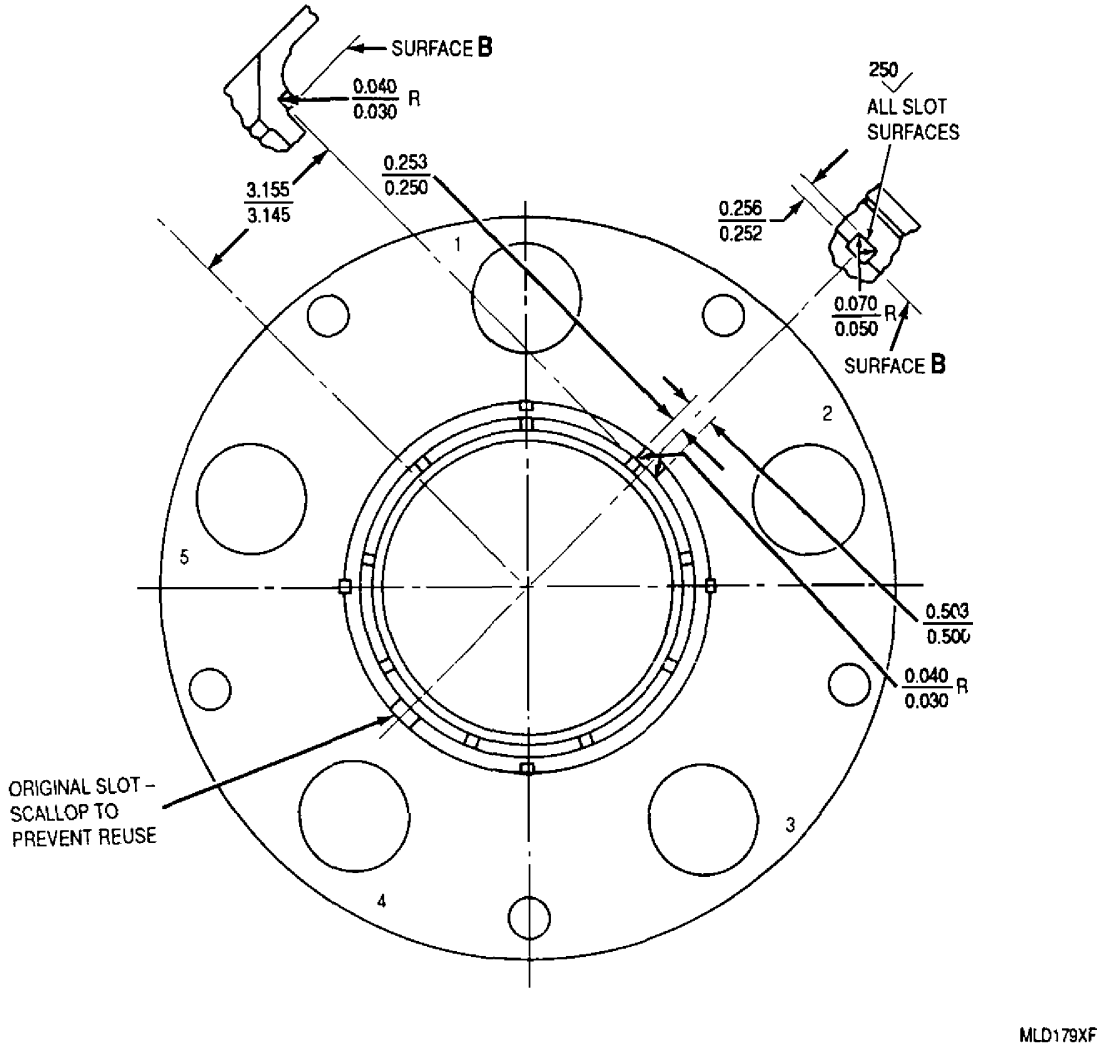

Figure 3. Planet Rear Carrier − Machining New Slot

DEPOT MAINTENANCE

INSPECTION AND REPAIR

PLANET GEAR AND BEARING ASSEMBLY

Reference Material

Bearing Journal − Repair . . . . . WP 012 00
Gears − Inspection . . . . . WP 016 00
Magnetic Particle and Fluorescent Penetrant Inspection − Procedures . . . . . WP 017 00
Plating and Surface Treatment of Parts . . . . . WP 018 00
Anti−Friction Bearings − Maintenance . . . . . WP 138 00
Identification Marking Methods . . . . . AS 478

Alphabetical Index

Subject **Page No.**

Introduction 2
Planet Rear and Bearing Assembly 2
  Assembly 5
  Detail Parts Inspection 3
  Detail Parts Repair 3
  Disassembly 2
  Front and Rear Journal Repair 5
  Inside Diameter (Plug End) Repair 5

Record of Applicable Technical Directives

None

1. **INTRODUCTION.**

2. This work package (WP) provides the maintenance instructions (assembly, disassembly, inspection, and repair) for the planet gear and bearing assemblies used in reduction gear assemblies on the T56−A−427 turboprop engine.

3. **PLANET GEAR AND BEARING ASSEMBLY.**

4. Five planet gear and bearing assemblies are used in the planetary gear system. These five assemblies are stored together in a 6796835 protector box when removed at disassembly. Each planet gear and bearing assembly shall be considered a matched assembly (set) consisting of the original parts assembled at manufacture, except for the bearing separators. The separators can be replaced with new separators during depot maintenance. A planet gear and bearing assembly is comprised of the following details.

— One planet gear

— One planet gear and bearing journal

— Thirty two spherical bearing rollers

— Two planet bearing separators

5. PLANET GEAR AND BEARING ASSEMBLY − DISASSEMBLY. The planet gear and bearing assembly shall be completely disassembled for inspection.

Support Equipment Required

Part No./Type Designation	Nomenclature
6796835	Protector, planet gear and bearing assembly
6797917	Fixture, holding, planet gear assembly

CAUTION

Do not rotate (turn) bearing journal while moving it from its normal running position. Normal running position is parallel to gear teeth (perpendicular to gear rim face). Spherical marking or creasing of rollers is possible if journal is rotated (turned) while moving it out of its normal running position. Any rotation to remove or install rollers shall be accomplished by rotating the separators, not the journal.

All detail parts of the planet gear and bearing assembly comprise a matched assembly and shall be kept together. Do not intermix detail parts between assemblies.

NOTE

The rollers have an abbreviated serial number (all but the first two digits of the assembly serial number) marked on one end. The rollers installed in front separator have an F marked on end with serial number identification. At time of disassembly, separators and rollers that are removed from that separator shall be kept together and appropriately marked, Front or Rear. Be sure to keep all parts of assembly together so they may be reassembled as a matched set.

a. Remove a planet gear and bearing assembly from 6796835 protector box (figure 1). Remove Detail −2 nut and Detail −1 plate from rear journal.

NOTE

The bronze bushings and knurled nuts are details of the 6797917 holding fixture (figure 2).

b. Install Detail −4 bronze bushings on front and rear journals with smaller OD towards threads. Secure rear bushings with Detail −7 knurled nut (RH thread) and front bushings with Detail −8 knurled nut (LH thread).

c. Install assembly into 6797917 holding fixture with gear seated in base counterbore and bearing journal axis in vertical plane.

CAUTION

The bearing rollers can be damaged (spherical marking and creasing) if bearing journal is rotated (turned) when moving the journal axis from vertical to horizontal plane.

d. Move bearing journal axis (without rotating journal) from vertical to horizontal plane.

CAUTION

Front separator and rollers, and rear separator and rollers shall be kept together as sets.

Keep bearing journal axis in horizontal plane while rotating separators to remove bearing rollers. Tilting the journal may cause roller damage.

e. Remove exposed bearing rollers. Rotate separators, without tilting bearing journal axis (out−of−plane) to expose and remove remaining rollers.

f. Move bearing journal axis to vertical plane and remove assembly from holding fixture.

g. Remove knurled nuts and bronze bushings. Remove separators and bearing journal from gear. Store separators with respective (front or rear) bearing rollers.

6. PLANET GEAR AND BEARING ASSEMBLY − DETAIL PARTS INSPECTION.

a. Inspect detail parts. Refer to table 1.

b. Refer to WP 017 00 for magnetic particle inspection (MPI) procedure.

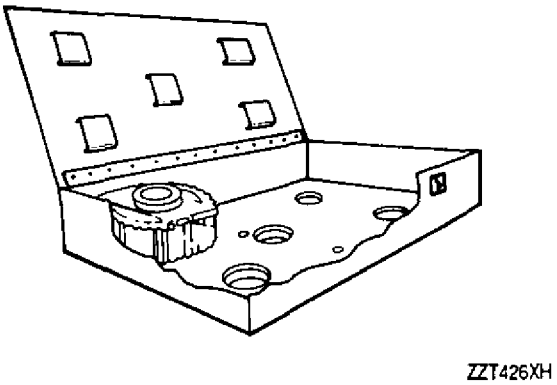

Figure 1. 6796835 Planet Gear and Bearing Assembly Protector (Box)

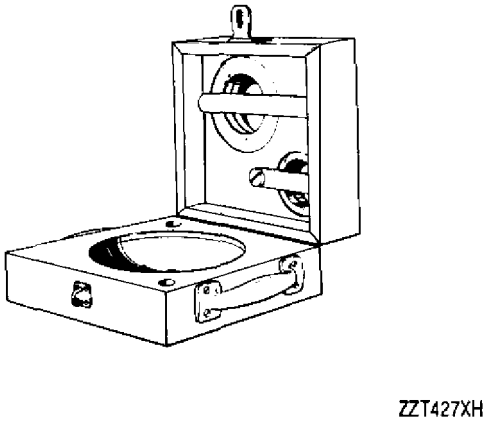

Figure 2. 6797917 Holding Fixture

7. PLANET GEAR AND BEARING ASSEMBLY − DETAIL PARTS REPAIR.

a. Repair detail parts. Refer to Disposition column, table 1.

b. Replace the planet gear and bearing assembly when either the planet gear, planet gear and bearing journal, or any bearing roller is not within serviceable limits after repair.

Table 1. Planet Gear and Bearing Assembly − Inspection and Repair

Condition	Serviceable Limits	Repairable Limits	Disposition
MPI Indications:			
Non−metallic type inclusions in planet gear.	Inclusions in radii, root corners of spline teeth, break into grooves, slots or holes if no fatigue−type progression is evident. Inclusions shall not be in line, parallel or in close proximity on a gear tooth.	Not repairable.	Condemn assembly exceeding serviceable limits.
Cracks.	Not serviceable.	Not repairable.	Condemn assembly exceeding serviceable limits.
Gear teeth.	Refer to WP 016 00.	Exceeds serviceable limit.	Condemn assembly exceeding serviceable limits.
Check bearing journal ID plug end (1.426−1.430 in.) for wear.	No visible wear.	Exceeds serviceable limit.	Repair ID. Refer to paragraph 8, this WP.
Wear on gear OD journals.	Front journal: Min diameter of 2.1975 in. Rear journal: Min diameter of 2.1875 in.	Front journal: Min diameter of 2.1875 in. Rear journal: Min diameter of 2.1775 in.	Repair journals. Refer to paragraph 9, this WP.
Spalling on gear teeth.	Not serviceable.	Not repairable.	Condemn assembly exceeding serviceable limits.
Spalling on gear or journal roller pathways.	Not serviceable.	Not repairable.	Condemn assembly exceeding serviceable limits.
Magnetized gear or bearing.	Not serviceable.	All magnetized parts.	Demagnetize parts. Refer to WP 138 00.
Worn black oxide finish on raceways.	Black oxide finish intact eliminates necessity to measure internal clearance.	Max of 1/3 of the coating removed in a localized 1/4 in. dia circle on the roller race surface providing the bearing is within limits in WP 138 00.	Restore finish. Refer to WP 018 00.
Separators.	Refer to WP 138 00.	Not repairable.	Condemn assembly exceeding serviceable limits.
Rollers.	Refer to WP 138 00.	Not repairable.	Condemn assembly exceeding serviceable limits.

8. PLANET GEAR AND BEARING ASSEMBLY − INSIDE DIAMETER (PLUG END) REPAIR.

a. Machine inside diameter to remove wear and achieve a 0.000 − 0.004 in. tight fit at room temperature with an oversize plug (table 2) as follows:

(1) Remove minimum material up to 1.4394 in. maximum to remove wear. If further machining is required to remove wear, machine up to 1.450 in. maximum and silver plate (step b.).

(2) Maintain concentricity with rear journal within 0.005 in. FIR.

(3) Tag journal indicating finished ID dimension (for use in oversize plug selection at assembly).

b. Silver plate (AMS 2412) ID as follows:

(1) Masked areas not to be plated.

(2) Silver plate ID (WP 018 00) except bake temperature shall be 300 − 325°F (149 − 163°C).

(3) Finish machine ID 1.426 − 1.430 in. Maintain concentricity with rear journal within 0.005 in. FIR.

(4) Restore 60° countersink to 1.515 in. maximum diameter.

(5) Tag journal indicating finished ID dimension (for use in oversize plug selection at assembly).

Table 2. Planet Journal Plug− Oversize Diameters

Part No.	Diameter (in.)
6829473−1	1.4200 − 1.4239
6829473−2	1.4240 − 1.4279
6829473−3	1.4280 − 1.4319
6829473−3A	1.4280 − 1.4299
6829473−3B	1.4300 − 1.4319
6829473−4	1.4320 − 1.4359
6829473−5	1.4360 − 1.4399

9. PLANET GEAR AND BEARING ASSEMBLY − FRONT AND REAR JOURNAL REPAIR.

a. Repair front and rear journals as required. Refer to WP 012 00.

b. Finish journal diameters, maintaining concentricity and requirements, as follows:

(1) Axis of part is established by front and rear journal diameters. Finished journals shall be concentric with each other and with part axis within 0.0005 in. FIR and square with their respective shoulders within 0.001 in. FIR.

(2) Machine front journal to 2.1975 − 2.1980 in.

(3) Machine rear journal to 2.1875 − 2.1880 in.

10. PLANET GEAR AND BEARING ASSEMBLY − ASSEMBLY. All assemblies shall be assembled using original matched assembly detail parts.

Support Equipment Required

Part No./Type Designation	Nomenclature
6796835	Protector, planet gear and bearing assembly
6797917	Fixture, holding, planet gear assembly
——	Gloves, lint−free

a. Wear clean lint−free gloves to handle detail parts during assembly.

b. Place planet gear in counterbore of base, in 6797917 holding fixture, with word FRONT facing down (serial and segregation numbers will be facing up). (QA)

c. When a new planet bearing separator is being installed mark assembly serial number on smaller diameter outer face. Use electrochemical etch intermediate method 7A2 or manual vibro peen shallow method 2DI. Refer to AS 478.

d. Install front and rear separators (serial numbers outward) on planet gear and bearing journal.

NOTE

The bronze bearings and knurled nuts are details of the 6797917 holding fixture.

e. Install Detail −4 bronze bearings on front and rear journals with smaller diameter outward. Secure rear bearing with Detail −7 (RH thread) and front bearing with Detail −8 nut (LH thread).

f. Place assembled bearing journal into bore of planet gear with the bearing journal axis in vertical plane and rear journal end up.

g. Move bearing journal axis from vertical to horizontal plane. This positions bearing separators in a vertical plane and exposes roller pockets.

CAUTION

The bearing spherical bearing rollers are identified by markings on the outer ends. The front row rollers are marked with the letter F and abbreviated serial number (all but the first two digits of the assembly serial number). The rear row rollers are only marked with the abbreviated serial number. Make sure all rollers are installed in the appropriate row with markings facing outward.

h. Install front and rear row bearing rollers into appropriate exposed roller pockets, making sure identification markings face outward. (QA).

CAUTION

Tilting the bearing journal axis out−of plane when rotating separators can cause roller damage.

i. Rotate separators, without tilting bearing journal axis out−of−plane, to expose roller pockets and install remaining bearing rollers. Make sure identification markings face outward. (QA).

j. Move bearing journal axis from horizontal to vertical plane. Do not rotate journal when moving to vertical plane.

k. Remove assembly from holding fixture and place on clean surface with rear journal up.

l. Remove Detail −7 nut and Detail −4 bronze bearing from rear journal. Install 6796835−1 detail plate and 6796835−2 detail nut.

m. Remove Detail −8 nut and Detail −4 bronze bearing from front journal. Place planet gear and bearing assembly in 6796835 protector box.

DEPOT MAINTENANCE

INSPECTION AND REPAIR

SUN GEAR

SUN GEAR HUB

SUN GEAR HUB FLANGE

Reference Material

Gears − Inspection . . . . . WP 016 00
Magnetic Particle and Fluorescent Penetrant Inspection − Procedures . . . . . WP 017 00
Plating and Surface Treatment of Parts . . . . . WP 018 00
Internal and External Spline − Repair . . . . . WP 047 00

Alphabetical Index

Subject **Page No.**

Introduction 2
Sun Gear 2
  Inspection 2
  Repair 2
Sun Gear Hub 3
  Inspection 3
  Repair 3
Sun Gear Hub Flange 3
  Heavy Scoring Repair 4
  Inspection 3
  Light Scoring Repair 4
  Repair 3

Record of Applicable Technical Directives

None

1. **INTRODUCTION.**

2. This work package (WP) provides the instructions for inspection and repair of the sun gear, sun gear hub, and sun gear hub flange used in the reduction gear assemblies on the T56−A−427 turboprop engine.

3. **SUN GEAR.**

4. SUN GEAR − INSPECTION.

a. Inspect sun gear. Refer to table 1.

b. Refer to WP 017 00 for magnetic particle inspection (MPI) procedure.

5. SUN GEAR − REPAIR.

a. Repair sun gear. Refer to Disposition column, table 1.

b. Replace gears not within serviceable limits after repair.

Table 1. Sun Gear − Inspection and Repair

Condition	Serviceable Limits	Repairable Limits	Disposition
MPI Indications:			
Non−metallic type inclusions.	Inclusions in radii, root corners of spline teeth, break into grooves, slots or holes if no fatigue−type progression is evident. Inclusions shall not be in line, parallel or in close proximity.	Not repairable.	Condemn gear exceeding serviceable limits.
Cracks.	Not serviceable.	Not repairable.	Condemn gear exceeding serviceable limits.
Gear teeth:			
Damage (dents, nicks, scuffing, etc.).	Refer to WP 016 00.	Exceeds serviceable limit.	Repair gear. Refer to WP 016 00.
Spalling:			
Minute.	Not serviceable.	Spalled areas shall not exceed 3/4 in. in total length nor be within 1/2 in. of tooth end. An interrupted area shall not exceed a height of 1/32 in. across the width of a tooth.	Strip gear of silver plate and lightly vapor hone or stone the spoiled areas. Condemn gears if rework reveals any pits. Acceptable gears shall be replated. Refer to silver plating inspection item of this table for plating instructions.
Fatigue type.	Not serviceable.	Not repairable.	Condemn gear exceeding serviceable limits.
Splines:			
Minor galling or damage.	Not serviceable.	Any minor galling or damage.	Stone splines as required to remove any build−up or sharp edges.
Wear.	Refer to WP 047 00.	Not repairable.	Condemn gear exceeding serviceable limits.

Table 1. Sun Gear − Inspection and Repair (contd)

Condition	Serviceable Limits	Repairable Limits	Disposition
Loss of silver plating.	Not serviceable.	Any loss of plating.	Replate gear as follows: Refer to WP 018 00. a. Strip all silver plate prior to replating. b. Silver plate sun gear all over. c. Plate gear per AMS 2412 with a copper strike, except bake temperature shall be 310−340°F (154−171°C). Plating thickness shall be 0.0001−0.0003 in.

6. **SUN GEAR HUB.**

7. SUN GEAR HUB − INSPECTION.

a. Inspect sun gear hub. Refer to table 2.

b. Refer to WP 017 00 for magnetic particle inspection (MPI) procedure.

8. SUN GEAR HUB − REPAIR.

a. Repair sun gear hub. Refer to Disposition column, table 2.

b. Replace sun gear hubs not within serviceable limits after repair.

Table 2. Sun Gear Hub − Inspection and Repair

Condition	Serviceable Limits	Repairable Limits	Disposition
MPI Indications:			
Non−metallic type inclusions.	Inclusions in radii, root corners of spline teeth, break into grooves, slots or holes if no fatigue−type progression is evident. Inclusions shall not be in line, parallel or in close proximity.	Not repairable.	Condemn hub exceeding serviceable limits.
Cracks.	Not serviceable.	Not repairable.	Condemn hub exceeding serviceable limits.
Splines:			
Minor galling or damage.	Not serviceable.	Any minor galling or damage.	Stone splines as required to remove any build−up or sharp edges.
Wear.	Refer to WP 047 00.	Not repairable.	Condemn hub exceeding serviceable limits.

9. **SUN GEAR HUB FLANGE.**

10. SUN GEAR HUB FLANGE − INSPECTION.

a. Inspect sun gear hub flange. Refer to table 3.

b. Refer to WP 017 00 for magnetic particle inspection (MPI) procedure.

11. SUN GEAR HUB FLANGE − REPAIR.

a. Repair sun gear hub flange. Refer to Disposition column, table 3.

b. Replace sun gear hub flanges not within serviceable limits after repair.

Table 3. Sun Gear Hub Flange − Inspection and Repair

Condition	Serviceable Limits	Repairable Limits	Disposition
MPI Indications:			
Non−metallic type inclusions.	Inclusions in radii, root corners of spline teeth, break into grooves, slots or holes if no fatigue−type progression is evident. Inclusions shall not be in line, parallel or in close proximity.	Not repairable.	Condemn flange exceeding serviceable limits.
Cracks.	Not serviceable.	Not repairable.	Condemn flange exceeding serviceable limits.
Splines:			
Minor galling or damage.	Not serviceable.	Any minor galling or damage.	Stone splines as requiredto remove any build−up or sharp edges.
Wear.	Refer to WP 047 00.	Not repairable.	Condemn flange exceeding serviceable limits.
Light scoring on Surface C (figure 1).	Not serviceable.	Any scoring.	Repair flange. Refer to paragraph 12, this WP.
Heavy scoring on Surface C (figure 1).	Not serviceable.	Any scoring.	Repair flange. Refer to paragraph 13, this WP.
Loss of silver plating.	Not serviceable.	Any loss of plating.	Replate part as follows: Refer to WP 018 00. a. Strip all silver plate prior to replating. b. Silver plate hub flange all over, except Diameter C (figure 1); optional to plate Surface B (figure 1). c. Plate (AMS 2412) with a copper strike, except bake temperature shall be 310−340°F (154−171°C). Plating thickness shall be 0.0001 − 0.0003 in.

12. SUN GEAR HUB FLANGE − LIGHT SCORING REPAIR. (figure 1)

a. Locate on Spline PD and zero− in Diameter C. Minimize runout on Surface B.

b. Grind Surface C to remove scoring and restore chamfer at Diameter C.

c. Grind Surface B as required to restore the 0.231 − 0.229 in. step dimension. Flange thickness after grinding shall not be less than 0.179 in.

d. Blend Surface B into 0.035 in. radius, avoiding Diameter C by 0.002 − 0.004 in.

e. If scoring is still evident, repair per paragraph 13, this WP.

13. SUN GEAR HUB FLANGE − HEAVY SCORING REPAIR. (figure 1)

a. Locate on Spline PD and zero − in Diameter C. Minimize runout on Surface B.

b. Grind Surface C to remove scoring and restore chamfer at Diameter C.

c. If Diameter C is undersize, less than 8.6617 in. grind as necessary to clean and true up. Minimum diameter for plating is 8.643 in.

d. Grind Surface B to remove wear. Minimum flange thickness for plating is 0.179 in.

e. Mask part and chrome plate Surfaces B and C and Diameter C. Refer to WP 018 00. Plating thickness shall not exceed 0.015 in.

f. Repeat step a.

g. Finish grind part to dimensions shown. Use a firm back−up on flange rear surface.

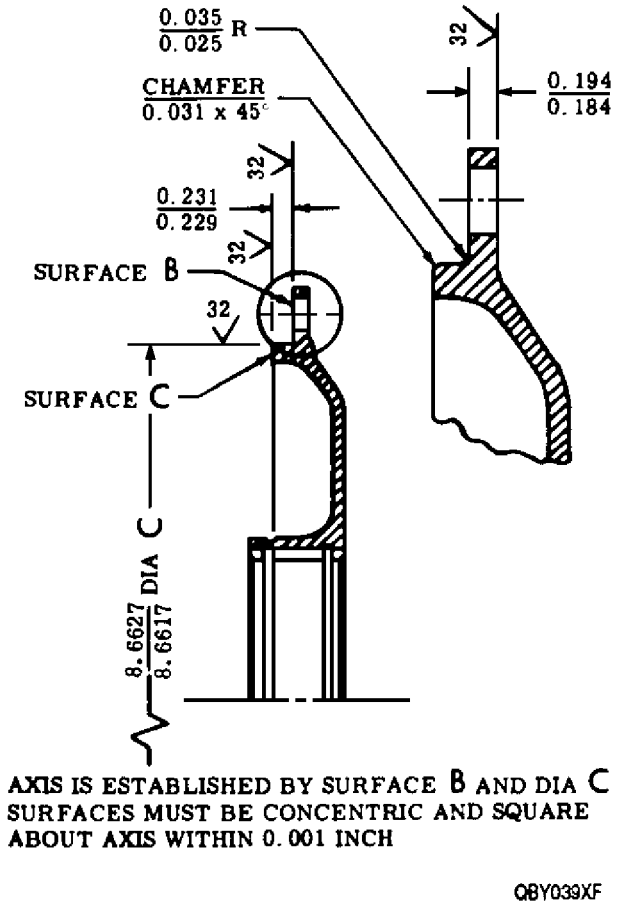

Figure 1. Sun Gear Hub Flange Rework

DEPOT MAINTENANCE

INSPECTION AND REPAIR

NOSE BEARING PLATE

Reference Material

Magnetic Particle and Fluorescent Penetrant Inspection − Procedures . . . . . WP 017 00
Plating and Surface Treatment of Parts . . . . . WP 018 00

Alphabetical Index

Subject **Page No.**

Introduction 2
Nose Bearing Plate 2
Front Surface Repair 2
Inspection 2
Repair 2

Record of Applicable Technical Directives

None

1. **INTRODUCTION.**

2. This work package (WP) provides the instructions for inspection and repair of the nose bearing plate used in reduction gear assemblies on the T56−A−427 turboprop engine.

3. **NOSE BEARING PLATE.**

4. NOSE BEARING PLATE − INSPECTION.

a. Inspect nose bearing plate. Refer to table 1.

b. Refer to WP 017 00 for fluorescent penetrant inspection (FPI) procedure.

5. NOSE BEARING PLATE − REPAIR.

a. Repair nose bearing plate. Refer to Disposition column, table 1.

b. Replace plates not within serviceable limits after repair.

Table 1. Nose Bearing Plate − Inspection and Repair

Condition	Serviceable Limits	Repairable Limits	Disposition
FPI. Cracks (any location).	Not serviceable.	Not repairable.	Condemn part exceeding serviceable limits.
Wear on front surface.	Wear or scoring on front surface if not in excess of 0.002 in. as measured from adjacent unworn area.	0.354 in. min thickness (at any point).	Repair front surface. Refer to paragraph 6, this WP.
Raised metal in key slot.	Not serviceable.	Any amount.	Remove raised metal using fine stones or fine files.

6. NOSE BEARING PLATE − FRONT SURFACE REPAIR.

a. Grind front surface (Surface B) to remove wear or scoring. Thickness of plate shall not be less than 0.349 in. after grinding.

b. Stress relieve after grinding, chrome plate ground area and stress relieve after plating. Refer to WP 018 00.

c. Finish grind Surface B to obtain plate thickness of 0.354 − 0.358 in. and 32 RMS surface texture. The following feature controls apply to Surface B and rear surface (Surface C).

(1) Surfaces B and C shall be flat within 0.010 in. FIR in free state except for the area where scavenge pump is mounted. This area shall be flat within 0.002 in. FIR in free state.

(2) When Surface C is constrained, in a manner similar to engine assembly, the area of Surface C (area within mounting bolt circle diameter) shall be flat within 0.002 in. FIR and scavenge pump mounting surface area of Surface B shall be flat and parallel with Surface C within 0.002 in. FIR.

DEPOT MAINTENANCE

INSPECTION AND REPAIR

CARRIER OIL DELIVERY FLANGE ASSEMBLY

Reference Material

None

Alphabetical Index

Subject **Page No.**

Carrier Oil Delivery Flange Assembly 2
Bushing Replacement 2
Inspection 2
Repair 2
Introduction 2

Record of Applicable Technical Directives

None

1. **INTRODUCTION.**

2. This work package (WP) provides the instructions for inspection and repair of the carrier oil delivery flange assembly used in reduction gear assemblies on the T56−A−427 turboprop engine.

3. **CARRIER OIL DELIVERY FLANGE ASSEMBLY.**

4. CARRIER OIL DELIVERY FLANGE ASSEMBLY − INSPECTION. Inspect delivery flange. Refer to table 1.

5. CARRIER OIL DELIVERY FLANGE ASSEMBLY − REPAIR.

a. Repair delivery flange. Refer to Disposition column, table 1.

b. Replace delivery flanges not within serviceable limits after repair.

Table 1. Carrier Oil Delivery Flange Assembly − Inspection and Repair

Condition	Serviceable Limits	Repairable Limits	Disposition
Loose bushing.	Not serviceable.	Any looseness.	Replace bushing. Refer to paragraph 6, this WP.
Worn bushing ID.	0.501 in. maximum.	Exceeds 0.501 in.	Replace bushing. Refer to paragraph 6, this WP.
Sun gear lube tube hole wear.	Maximum diameter of 0.438 in.	Not repairable.	Condemn delivery flange exceeding serviceable limits.

6. CARRIER OIL DELIVERY FLANGE ASSEMBLY − BUSHING REPLACEMENT. (figure 1)

Materials Required

Specification No./Part No.	Nomenclature
AN150334	Pin (2)
MIL−PRF−680, Type II	Solvent, dry cleaning
6809489	Bushing, delivery flange (AR)
6809489−1	Bushing, delivery flange (AR)
6809489−2	Bushing, delivery flange (AR)

a. Remove worn or loose bushing as follows:

(1) Drill pins (0.091 − 0.093 in. diameter) to depth sufficient to remove bushing.

(2) Remove bushing.

(3) Remove remaining portion of pins.

b. If inside diameter in flange is scored, ream for oversize bushings as follows:

(1) Ream 1.0307 − 1.0317 in. for PN 6809489−1 oversize bushing.

(2) Ream 1.0620 − 1.0630 in. for PN 6809489−2 oversize bushing.

c. Install replacement bushing as follows:

(1) Install bushing with pinholes located 45 degrees from old pinholes as shown (figure 1).

(2) Line drill into flange to size and depth shown.

(3) Remove metal chips from pinholes and bushing.

d. Select pins for drive fit. Stake metal over slightly being careful not to distort ID of bushing.

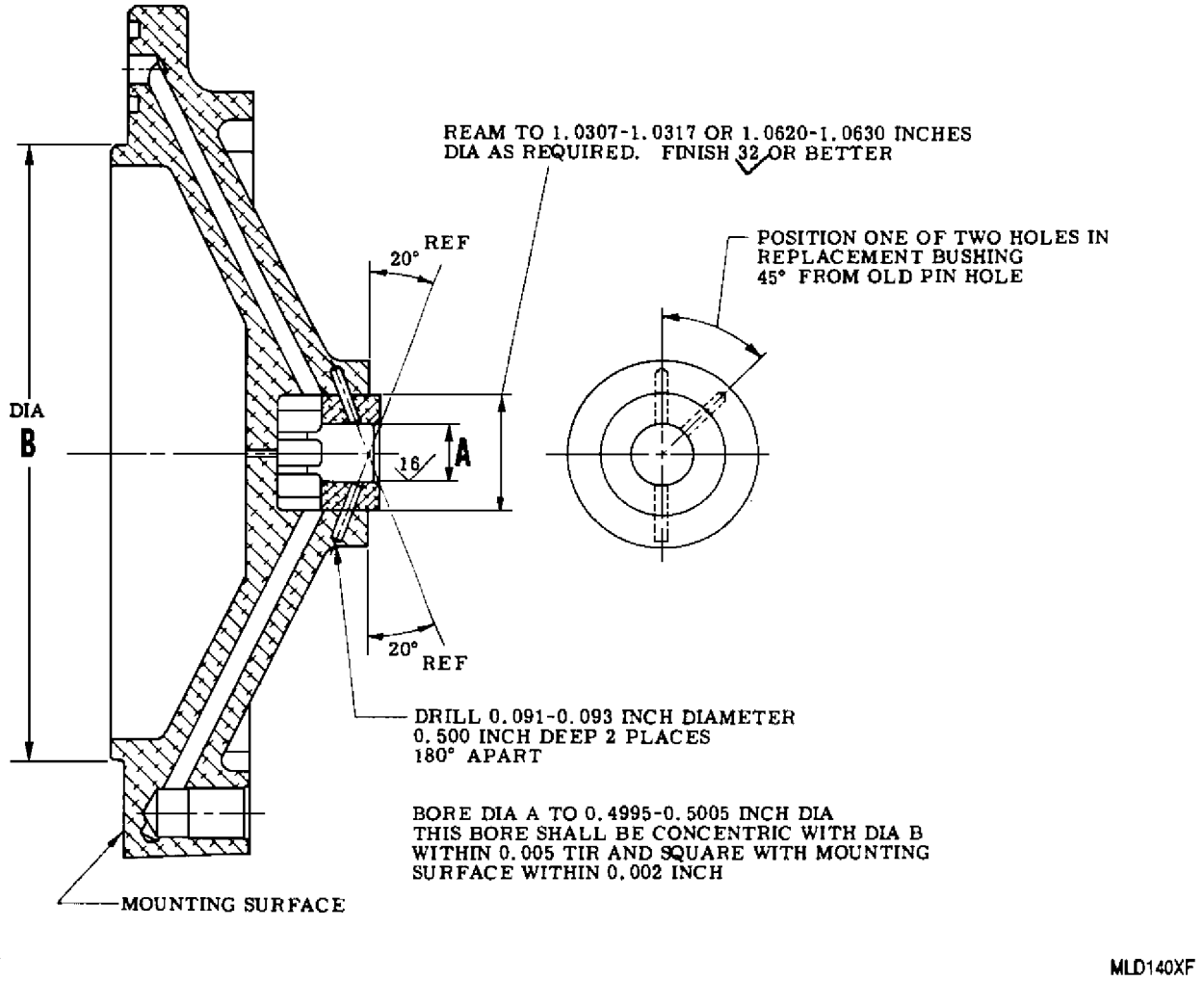

Figure 1. Carrier Oil Delivery Flange Assembly − Bushing Replacement

e. Ream Diameter A to 0.4995 − 0.5005 in., 0.600 in. deep and surface texture of 16 RMS.

Dry Cleaning Solvent
MIL−PRF−680, Type II **3**

Compressed Air **56**

f. Remove any metal chips. Clean bushing bore, sun gear tube tube and planet gear lube bore oil passages using MIL−PRF−680, type II dry cleaning solvent. Blow dry using clean compressed air.

DEPOT MAINTENANCE

INSPECTION AND REPAIR

PINION GEAR OIL JET TUBE ASSEMBLY
PROPELLER BRAKE OIL TUBE
CARRIER OIL LUBE TUBE
SUN GEAR LUBE TUBE ASSEMBLY
TACH BEARING OIL TUBE ASSEMBLY

Reference Material

Plating and Surface Treatment of Parts . . . . . WP 018 00
Brazing, Silver, for Use up to 400°F (205°C) . . . . . AMS 2665

Alphabetical Index

Subject **Page No.**

Carrier Oil Lube Tube 4
  Inspection and Repair 4
  Pilot Journal Wear and Scoring Repair 4
  Cleaning 5
Introduction 2
Pinion Gear Oil Jet Tube Assembly 2
  Inspection and Repair 2
  Pilot Journal Wear Repair 2
Propeller Brake Oil Tube 3
  Inspection and Repair 3
  Pilot Journal Wear and Scoring Repair 3
Sun Gear Lube Tube Assembly 6
  Cleaning 6
  Inspection and Repair 6
Tach Bearing Oil Tube Assembly 7
  Inspection and Repair 7

Record of Applicable Technical Directives

None

1. **INTRODUCTION.**

2. This work package (WP) provides the inspection and repair instructions for the internal oil tubes used in reduction gear assemblies on the T56−A−427 turboprop engine. The following are included:

- Pinion gear oil jet tube assembly
- Propeller brake oil tube
- Carrier oil tube tube
- Sun gear lube tube assembly
- Tach bearing oil tube assembly

3. **PINION GEAR OIL JET TUBE ASSEMBLY.**

4. PINION GEAR OIL JET TUBE ASSEMBLY − INSPECTION AND REPAIR.

a. Inspect pinion gear oil jet tube assembly. Refer to table 1.

b. Repair pinion gear oil jet tube assembly. Refer to Disposition column, table 1.

c. Replace oil jet tube assemblies not within serviceable limits after repair.

Table 1. Pinion Gear Oil Jet Tube − Inspection and Repair

Condition	Serviceable Limits	Repairable Limits	Disposition
Pilot journal wear.	0.364 in. min. diameter for distance up to 0.560 in. from plugged end.	0.356 in. min. diameter.	Repair pilot journal. Refer to paragraph 5, this WP.
Tube runout.	Mounting flange front face shall be square with tube centerline 0.005 in. per in.	Not repairable.	Condemn tube assembly exceeding serviceable limits.
Obstructed oil jets in tube. (0.054 − 0.056 in. diameter)	Not serviceable.	Any obstruction.	Clear oil jets using No. 54 drill.

5. PINION GEAR OIL JET TUBE ASSEMBLY − PILOT JOURNAL WEAR REPAIR. (figure 1) Pilot journal wear may be repaired by silver−braze method (step a.) or by optional chrome−plate repair method (step b.).

a. Silver−braze repair pilot journal (figure 1) as follows:

Materials Required

Specification No./Part No.	Nomenclature
AMS 4770	Metal, filler, silver brazing

(1) Buildup journal using torch brazing method and AMS 4770 filler metal. Refer to AMS 2665.

(2) Finish machine journal to dimensions and surface finish shown. Maintain concentricity with opposite end outside diameter within 0.005 in. FIR. Restore chamfer.

b. (Optional method) Chrome−plate repair pilot journal (figure 1) as follows:

(1) Machine journal to 0.356 in. maximum to remove wear, hold material removal to a minimum. Maintain concentricity with opposite end outside diameter within 0.005 in. FIR.

(2) Chrome plate journal area to a dimension sufficient to obtain finish dimensions. Refer to WP 018 00.

(3) Finish machine journal to dimensions and surface texture shown. Maintain concentricity with opposite end outside diameter within 0.005 in. FIR. Restore chamfer.

6. **PROPELLER BRAKE OIL TUBE.**

7. PROPELLER BRAKE OIL TUBE − INSPECTION AND REPAIR.

a. Inspect propeller brake oil tube. Refer to table 2.

b. Repair propeller brake oil tube. Refer to Disposition column, table 2.

c. Replace oil tubes not within serviceable limits after repair.

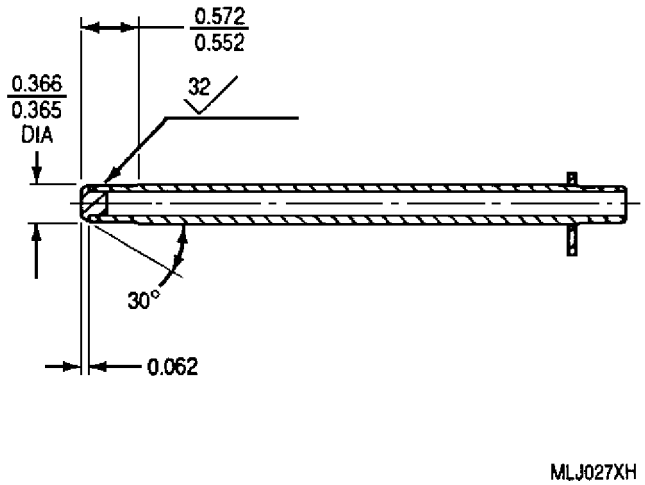

Figure 1. Pinion Gear Oil Jet Tube Assembly − Journal Wear Repair

Table 2. Propeller Brake Oil Tube − Inspection and Repair

Condition	Serviceable Limits	Repairable Limits	Disposition
Pilot journal wear and scoring (figure 2).	0.2485 in. min. diameter with no scoring.	0.2395 in. min. diameter. Scoring within repair clean up limits.	Repair journals and thrust shoulder faces. Refer to paragraph 8, this WP.
Tube runout.	Thrust shoulder faces square with axis within 0.002 in. FIR (figure 2).	0.303 in. max from end of tube.	Repair faces as necessary. Refer to paragraph 8, this WP.

8. PROPELLER BRAKE OIL TUBE − PILOT JOURNAL WEAR AND SCORING REPAIR. (figure 2)

a. Clean up wear and scoring on thrust shoulder faces and Diameter A and B (figure 2) as follows:

(1) Machine Diameter A and B to 0.2395 in. maximum, hold material removal to a minimum.

(2) Machine shoulder faces to 0.304 in. maximum from end, hold material removal to a minimum.

(3) Maintain squareness and concentricity within requirements shown.

b. Chrome plate journals and shoulder faces to sufficient dimensions to obtain finish dimensions. Refer to WP 018 00.

c. Finish machine shoulder faces and Diameter A and B as follows:

(1) Machine shoulder faces and Diameter A and B to dimensions and surface texture shown.

(2) Check squareness and concentricity requirements (figure 2).

(3) Plating thickness shall be 0.001 − 0.005 in. after finish machining.

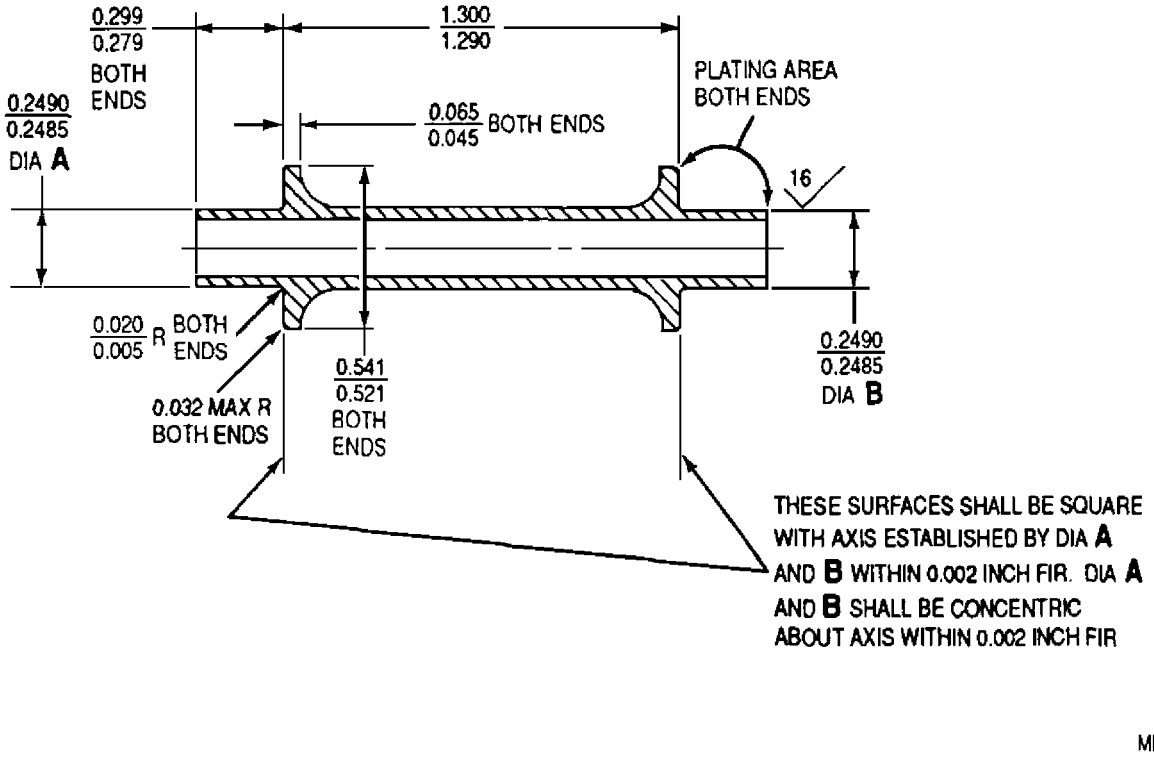

Figure 2. Propeller Brake Oil Tube − Pilot Journal Wear and Scoring Repair

9. **CARRIER OIL LUBE TUBE.**

10. CARRIER OIL LUBE TUBE − INSPECTION AND REPAIR.

a. Inspect carrier oil lube tube. Refer to table 3.

b. Repair carrier oil lube tube. Refer to Disposition column, table 3.

c. Replace oil lube tubes not within serviceable limits after repair.

11. CARRIER OIL LUBE TUBE − PILOT JOURNAL WEAR AND SCORING REPAIR. (figure 3)

a. Clean up wear and scoring on Dia A and B and Surfaces D and E as follows:

(1) Machine Dia A and B to 0.4885 in. maximum, hold material removal to a minimum.

Table 3. Carrier Oil Lube Tube − Inspection and Repair

Condition	Serviceable Limits	Repairable Limits	Disposition
Pilot journal wear and scoring (Dia A and B, figure 3).	0.4985 in. min. diameter.	0.4885 in. min. diameter.	Repair journals. Refer to paragraph 11, this WP.
Oil Tube runout.	Tube shoulders square with axis, as established by journal diameters, to within 0.002 in. FIR.	Not repairable.	Condemn tube exceeding serviceable limits.
Plugged central oil orifice.	Not serviceable.	Any amount.	Clean central oil orifice to a 0.031−0.033 in. diameter per paragraph 12, this WP.

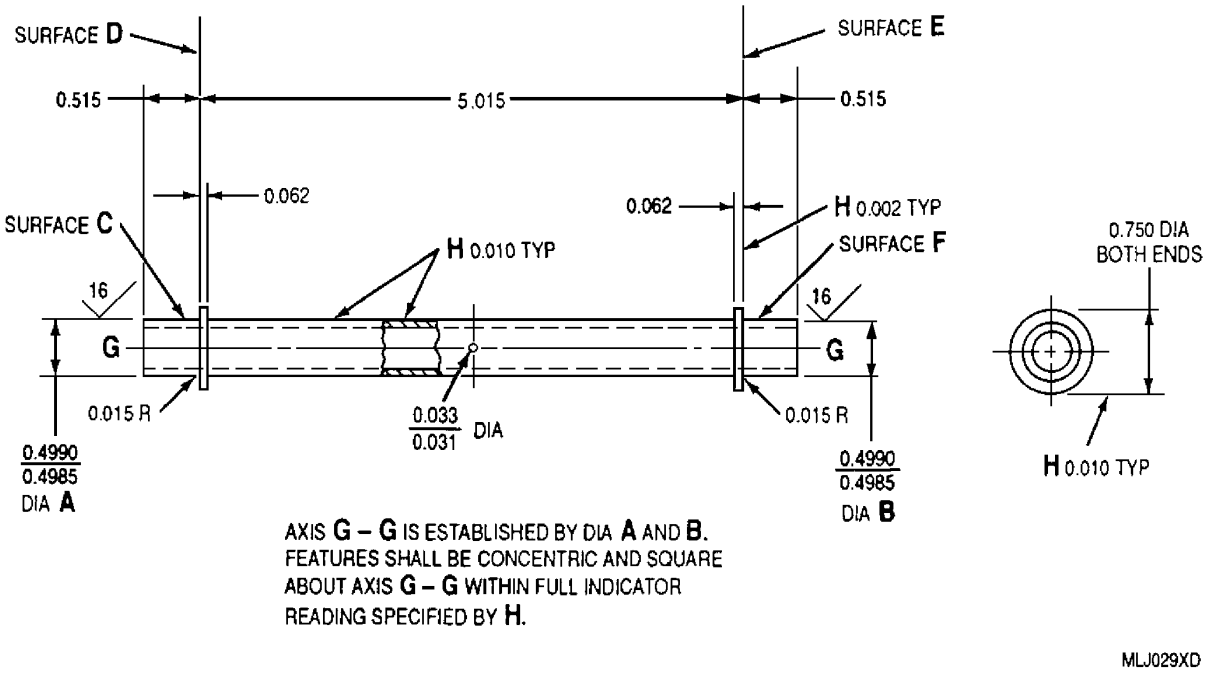

Figure 3. Carrier Oil Lube Tube − Pilot Journal Wear and Scoring Repair

(2) Machine Surfaces D and E to 0.525 in. maximum from tube end, hold material removal to a minimum.

(3) Maintain squareness and concentricity within requirements shown.

b. Chrome plate Diameters A and Band Surfaces D and E to sufficient dimensions to obtain finish dimensions. Refer to WP 018 00.

c. Finish machine Surfaces D and E and Diameters A and B as follows:

(1) Machine Diameters A and Band Surfaces D and E to dimensions and surface finish shown.

(2) Check squareness and concentricity requirements (figure 3).

(3) Plating thickness shall be 0.001 − 0.005 in. after finishing machining.

12. CARRIER OIL LUBE TUBE − CLEANING.

Materials Required

Specification No./Part No.	Nomenclature
MIL−PRF−680, Type II	Solvent, dry cleaning

Dry Cleaning Solvent MIL−PRF−680, Type II **3**

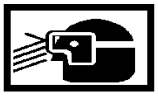

Compressed Air **56**

a. Flush tube with MIL−PRF−680, Type II dry cleaning solvent. Dry with clean compressed air.

Table 4. Sun Gear Lube Tube Assembly − Inspection and Repair

Condition	Serviceable Limits	Repairable Limits	Disposition
Pilot journal wear.	0.4370 in. min. OD.	Not repairable.	Condemn lube tubes exceeding serviceable limits.
Obstructed orifice plug/oil jets in tube body.	Not serviceable.	Any obstruction.	Clean plug orifice/oil jets. Refer to paragraph 15, this WP.
Loose orifice plug.	Not serviceable.	0.362 in. max tube inside diameter.	Replace plug orifice. Refer to paragraph 15, this WP.

13. **SUN GEAR LUBE TUBE ASSEMBLY.**

14. SUN GEAR LUBE TUBE ASSEMBLY − INSPECTION AND REPAIR.

a. Inspect sun gear lube tube assembly. Refer to table 4.

b. Repair sun gear lube tube assembly. Refer to Disposition column, table 4.

c. Replace lube tube assemblies not within serviceable limits after repair.

15. SUN GEAR LUBE TUBE ASSEMBLY − CLEANING.

Materials Required

Specification No./Part No.	Nomenclature
MIL−PRF−680, Type II	Solvent, dry cleaning
——	Ice, dry

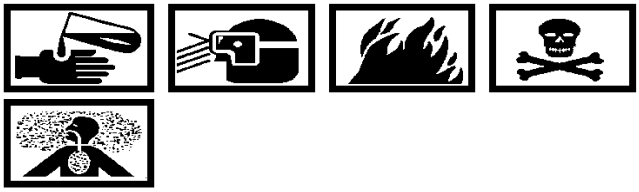

Dry Cleaning Solvent
MIL−PRF−680, Type II **3**

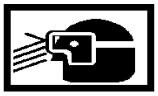

Compressed Air **56**

a. Flush tube assembly with MIL−PRF−680, Type II dry cleaning solvent. Dry with clean compressed air.

b. Clear obstructed orifice plug and tube oil jets as follows:

(1) Remove plug using 0.250−28 bolt as a puller. If plug was loose, replace with oversize plug.

(2) Clear plug orifice (0.065 − 0.067 in.) using a No. 52 drill. Orifice size after clearing shall not exceed 0.067 in.

CAUTION

The oil jets are drilled through one wall of tube at 30 degree angle. Clear obstructions carefully to avoid enlarging the jets.

(3) Clear oil jets (0.055 − 0.057 in.) using a No. 54 drill. Be sure to use drill at 30 degree angle when clearing jets.

Dry Cleaning Solvent
MIL−PRF−680, Type II **3**

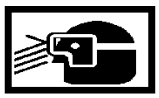

Compressed Air **56**

(4) Flush tube with MIL−PRF−680, Type II dry cleaning solvent and dry with clean compressed air.

c. Install orifice plug using a 0.250−28 bolt as a pusher as follows:

(1) Plug−to−tube fit shall be 0.000 − 0.001T in. It necessary, install oversize plug to obtain tight fit. Plugs are available in 0.001 and 0.002 in. oversizes.

Dry Ice, BB−C−104 **55**

(2) Install plug on bolt (pusher) and chill using dry ice. Press plug into tube until bottomed. Allow temperature to normalize then remove bolt.

(3) Flange OD of installed plug shall not extend beyond tube OD and tube OD shall not exceed 0.4375 in. maximum with plug installed.

16. **TACH BEARING OIL TUBE ASSEMBLY.**

17. TACH BEARING OIL TUBE ASSEMBLY − INSPECTION AND REPAIR.

a. Inspect tach bearing oil tube assembly. Refer to table 5.

b. Repair tach bearing oil tube assembly. Refer to Disposition column, table 5.

c. Replace oil tube assemblies not within serviceable limits after repair.

Table 5. Tach Bearing Oil Tube Assembly − Inspection and Repair

Condition	Serviceable Limits	Repairable Limits	Disposition
Packing groove and journal for nicks, dents, burrs.	Not serviceable.	Any amount.	Remove raised metal using fine stone.
Flattening at bends (bends made at manufacture.)	Ten percent maximum of nominal outside diameter.	Not repairable.	Condemn tube assembly exceeding serviceable limits.
Bending (other than at manufacture.)	Not serviceable.	Not repairable.	Condemn tube assembly exceeding serviceable limits.

DEPOT MAINTENANCE

INSPECTION AND REPAIR

PROPELLER SHAFT (OIL) SEAL ASSEMBLY

Reference Material

None

Alphabetical Index

Subject **Page No.**

Introduction 2
Propeller Shaft (Oil) Seal Assembly 2
Inspection and Repair 2

Record of Applicable Technical Directives

None

1. **INTRODUCTION.**

2. This work package (WP) provides the inspection and repair instructions for the propeller shaft (oil) seal assembly used in reduction gear assemblies on the T56−A−427 turboprop engine.

3. **PROPELLER SHAFT (OIL) SEAL ASSEMBLY.**

4. PROPELLER SHAFT (OIL) SEAL ASSEMBLY − INSPECTION AND REPAIR.

a. Inspect propeller shaft (oil) seal assembly. Refer to table 1.

b. Replace propeller shaft (oil) seal assemblies exceeding serviceable limits. No repairs are permitted.

Table 1. Propeller Shaft (Oil) Seal Assembly − Inspection and Repair

Condition	Serviceable Limits	Repairable Limits	Disposition
Cracked, dented, bent or nicked.	Not serviceable.	Not repairable.	Condemn part exceeding serviceable limits.
Flat wear on ID of contacting surface (rubber element).	1/16 in. wide on contacting surface.	Not repairable.	Replace seal assembly exceeding serviceable limits.

DEPOT MAINTENANCE

INSPECTION AND REPAIR

SPECIAL MUTED MACHINE BOLT (PROPELLER SHAFT (OIL) SEAL RETAINING BOLT)

Reference Material

Plating and Surface Treatment of Parts . . . . . WP 018 00
Plating, Cadmium . . . . . AMS 2400

Alphabetical Index

Subject **Page No.**

Introduction 2
Special Muted Machine Bolt 2
Bonded Rubber Mute Replacement 2
Inspection and Repair 2

Record of Applicable Technical Directives

None

1. **INTRODUCTION.**

2. This work package (WP) provides the instructions for inspection and repair of special muted machine bolt (propeller shaft (oil) seal retaining bolt) used in reduction gear assemblies on the T56−A−427 turboprop engine.

3. **SPECIAL MUTED MACHINE BOLT.**

4. SPECIAL MUTED MACHINE BOLT − INSPECTION AND REPAIR.

a. Inspect special muted machine bolt. Refer to table 1.

b. Repair special muted machine bolt. Refer to Disposition column, table 1.

c. Replace bolts exceeding serviceable limits after repair.

Table 1. Special Muted Machine Bolt − Inspection and Repair

Condition	Serviceable Limits	Repairable Limits	Disposition
Damaged rubber mute in muted area of bolt.	Not serviceable.	Any damage.	Replace rubber mute. Refer to paragraph 5, this WP.

5. SPECIAL MUTED MACHINE BOLT − BONDED RUBBER MUTE REPLACEMENT.

Support Equipment Required

Part No./Type Designation	Nomenclature
——	Mold, two piece

Materials Required

Specification No./Part No.	Nomenclature
Chemlok No. 205	Primer (CAGE 08CC3)
Chemlok No. 220	Adhesive (CAGE 08CC3)
MIL−R−6855, Type 1, Class 60	Rubber, silicone
——	Material, mask

a. Remove all bonded rubber material (mute) from bolt.

b. Chemically clean entire bolt, including complete stripping of cadmium plating.

c. Measure diameter of mute area. Diameter shall be within 0.250 − 0.255 in. Reject bolt if diameter is less than 0.250 in.

d. Cadmium plate entire bolt as follows:

(1) Cadmium plate per AMS 2400 except use cadmium fluoroborate solution. Refer to WP 018 00.

(2) Plating thickness shall be 0.0002 − 0.0005 in.

e. Mask unmuted areas (head, shank and threads) of bolt.

f. Grit blast mute area.

g. Vulcanize replacement mute onto bolt as follows:

(1) Apply a thin uniform coat of No. 205 primer to mute area and allow to air dry.

(2) Apply a single uniform coat of No. 220 adhesive over primed area. Allow to dry 10 − 30 minutes.

(3) Install mold onto bolt.

(4) Introduce MIL−R−6855, Type 1, Class 60 rubber into mold. Vulcanize rubber to bolt.

h. Remove mold and check for complete coverage of mute area. No voids or discontinuities acceptable.

DEPOT MAINTENANCE

INSPECTION AND REPAIR

PROPELLER SHAFT THRUST BEARING NUT

Reference Material

Plating and Surface Treatment of Parts . . . . . WP 018 00
Plating, Cadmium, Hard Deposit . . . . . AMS 2406

Alphabetical Index

Subject **Page No.**

Introduction 2
Propeller Shaft Thrust Bearing Nut 2
Inspection and Repair 2
Outside Diameter Plating Repair 2

Record of Applicable Technical Directives

None

1. **INTRODUCTION.**

2. This work package (WP) provides the inspection and repair instructions for the propeller shaft thrust bearing nut used in reduction gear assemblies on the T56−A−427 turboprop engine.

3. **PROPELLER SHAFT THRUST BEARING NUT.**

4. PROPELLER SHAFT THRUST BEARING NUT − INSPECTION AND REPAIR.

a. Inspect propeller shaft thrust bearing nut. Refer to table 1.

b. Repair propeller shaft thrust bearing nut. Refer to Disposition column, table 1.

c. Replace thrust bearing nuts not within serviceable limits after repair.

Table 1. Propeller Shaft Thrust Bearing Nut − Inspection and Repair

Condition	Serviceable Limits	Repairable Limits	Disposition
OD wear and surface texture roughness.	5.868 in. min OD with 8−12 RMS surface texture with no apparent wear.	Any amount of wear and 5.860 in. min OD.	Chrome plate OD. Refer to paragraph 5, this WP.

5. PROPELLER SHAFT THRUST BEARING NUT − OUTSIDE DIAMETER PLATING REPAIR.

a. Strip existing chrome plate from outside diameter (OD).

b. The following feature control requirements apply to surface preparation and finish grinding.

(1) Nut OD shall be concentric with pitch diameter of thread within 0.002 in. FIR and round within 0.001 in. FIR.

(2) Nut OD shall be square with front face of nut within 0.001 in. FIR.

c. Grind OD to obtain concentricity and squareness requirements and to clean up surface. Remove minimum amount of material. Do not reduce OD below 5.860 in.

d. Chrome plate (AMS 2406) OD to sufficient thickness for finish grinding. Refer to WP 018 00.

e. Finish grind OD as follows:

(1) Grind OD to 5.870 − 5.875 in.

(2) Obtain surface texture of 8 − 12 RMS maintaining concentricity, roundness and squareness requirements.

(3) Plating thickness shall be 0.0015 − 0.010 in. after grinding.

DEPOT MAINTENANCE

INSPECTION AND REPAIR

NEGATIVE TORQUE INDICATOR PLUNGER
REVERSE (NEGATIVE) TORQUE SWITCH ACTUATOR ROD

Reference Material

Plating, Nickel, Electroless . . . . . AMS 2404
Plating, Cadmium, Hard Deposit . . . . . AMS 2406

Alphabetical Index

Subject **Page No.**

Introduction 2
Negative Torque Indicator Plunger 2
Inspection and Repair 2
Reverse (Negative) Torque Switch Actuator Rod 2
Conical Tip Wear Repair 3
Inspection and Repair 2

Record of Applicable Technical Directives

None

1. **INTRODUCTION.**

2. This work package (WP) provides the inspection and repair of the negative torque indicator plunger and the reverse (negative) torque switch actuator rod used in reduction gear assemblies on the T56−A−427 turboprop engine.

3. **NEGATIVE TORQUE INDICATOR PLUNGER.**

4. NEGATIVE TORQUE INDICATOR PLUNGER − INSPECTION AND REPAIR.

Materials Required

Specification No./Part No.	Nomenclature
A−A−1049	Cloth, emery, 400 grit

a. Inspect negative torque indicator plunger. Refer to table 1.

b. Repair negative torque indicator plunger. Refer to Disposition column, table 1.

c. Replace indicator plungers not within serviceable limits after repair.

Table 1. Negative Torque Indicator Plunger − Inspection and Repair

Condition	Serviceable Limits	Repairable Limits	Disposition
Wear on tip.	Wear acceptable within limits of figure 1 without rough areas and sharp edges.	Refer to figure 1 for minimum limits. Remove rough areas and sharp edges.	Smooth rough areas and break sharp edges using 400 grit emery cloth.
Scoring and galling on large OD.	Not serviceable.	Refer to figure 1 for minimum limits.	Smooth rough areas and break sharp edges using 400 grit emery cloth.

5. **REVERSE (NEGATIVE) TORQUE SWITCH ACTUATOR ROD.**

6. REVERSE (NEGATIVE) TORQUE SWITCH ACTUATOR ROD − INSPECTION AND REPAIR.

a. Inspect reverse (negative) torque switch actuator rod. Refer to table 2.

b. Repair reverse (negative) torque switch actuator rod. Refer to Disposition column, table 2.

c. Replace reverse (negative) torque switch actuator rods not within serviceable limits after repair.

Table 2. Reverse (Negative) Torque Switch Actuator Rod− Inspection and Repair

Condition	Serviceable Limits	Repairable Limits	Disposition
Wear on conical tip.	Not serviceable.	3.107 in. minimum length.	Repair rod tip to remove wear pattern. Refer to paragraph 7, this WP.

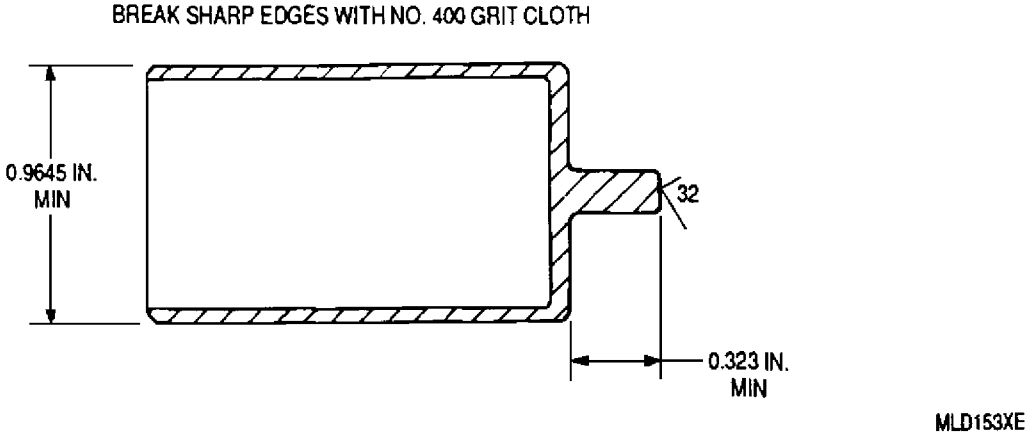

Figure 1. Negative Torque Indicator Plunger − Inspection and Repair

7. REVERSE (NEGATIVE) TORQUE SWITCH ACTUATOR ROD − CONICAL TIP WEAR REPAIR (figure 2).

a. Grind rod conical tip to remove wear pattern from tip face and taper holding material removal to a minimum. The rod is serviceable without plating (step b) when wear pattern is removed within in the following limits.

(1) Taper axial length does not exceed 0.198 in.

(2) Rod overall length is not less than 3.110 in.

(3) Taper 30° angle is maintained and 0.062 in. radius is restored.

(4) Surface texture is 63 RMS or finer.

b. Electroless nickel plate (AMS 2404) or chrome plate (AMS 2406) rod conical tip as follows:

(1) Grind tip face to remove remaining wear pattern. Minimum rod overall length shall not be less than 3.107 in., if less reject rod.

(2) Grind taper to remove remaining wear pattern. Maintain 30° angle and restore 0.062 in. radius.

(3) Electroless nickel plate or chrome plate shaded area (figure 2) to thickness sufficient to obtain finish dimensions.

(4) Finish grind tip face, taper and radius to a surface texture of 40 RMS and rod overall length of 3.112 − 3.114 in. Plating thickness shall be 0.0005 − 0.007 in. after finish grinding.

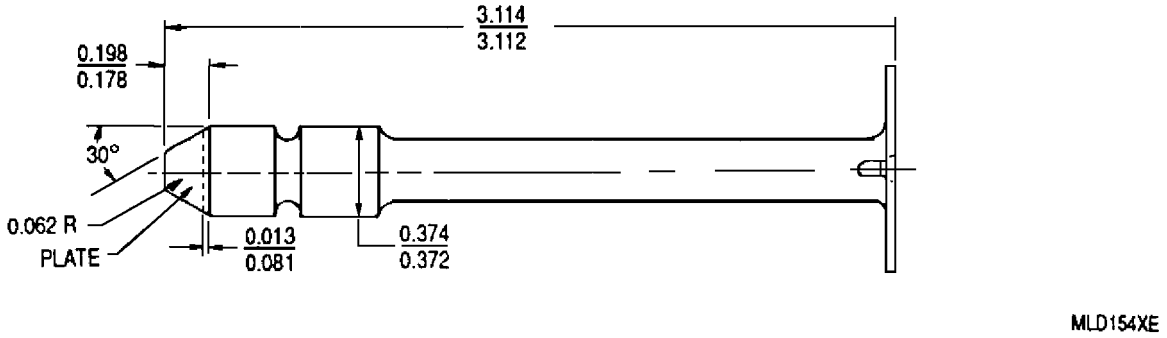

Figure 2. Reverse (Negative) Torque Switch Actuator Rod − Conical Tip Wear Repair

DEPOT MAINTENANCE

INSPECTION AND REPAIR

REDUCTION GEAR EYEBOLT
REDUCTION GEAR EYEBOLT PIN
STRUT CLEVIS BOLT

Reference Material

Magnetic Particle and Fluorescent Penetrant Inspection − Procedures . . . . . WP 017 00
Plating and Surface Treatment of Parts . . . . . WP 018 00

Alphabetical Index

Subject **Page No.**

Introduction 2
Reduction Gear Eyebolt 2
  Inspection 2
  Repair 2
Reduction Gear Eyebolt Pin 3
  Inspection 3
  Repair 3
Strut Clevis Bolt 4
  Inspection 4
  Repair 4

Record of Applicable Technical Directives

None

1. **INTRODUCTION.**

2. This work package (WP) provides the instructions for inspection and repair of the reduction gear eyebolts, reduction gear eyebolt pins and strut clevis bolts.

3. **REDUCTION GEAR EYEBOLT.**

4. REDUCTION GEAR EYEBOLT − INSPECTION.

a. Inspect eyebolt. Refer to table 1.

b. Refer to WP 017 00 for magnetic particle inspection (MPI) and fluorescent penetrant inspection (FPI) procedures.

5. REDUCTION GEAR EYEBOLT − REPAIR.

Materials Required

Specification No./Part No.	Nomenclature
MIL−PRF−3043	Resin coating

a. Repair eyebolt. Refer to Disposition column, table 1.

b. Replace eyebolt not within serviceable limits after repair.

Table 1. Reduction Gear Eyebolt − Inspection and Repair

Condition	Serviceable Limits	Repairable Limits	Disposition
MPI indications.	Not serviceable.	Not repairable.	Condemn part exceeding serviceable limits.
FPI indications − threaded end.	Not serviceable.	Not repairable.	Condemn part exceeding serviceable limits.
Fretting, galling or scoring.	Not serviceable.	Not repairable.	Condemn part exceeding serviceable limits.
Damaged threads.	Not serviceable.	Nicks and burrs in nut seating area. Damaged threads at cotter pin holes and forward.	Blend nicks and burrs onany thread not to exceed 50% depth of thread. If damage exceeds 50% on entrance thread, remove thread by machining. Do not machine beyond root thread diameter. Maximum of 25% of one complete thread may be reworked or removed at cotter pin holes.
Tongue thickness.	0.621 in. minimum.	0.618 in. minimum.	Strip plate locally and machine to remove uneven wear. Electroless nickel plate tongue per WP 018 00 (AMS 2405). Tongue thickness, after plating, shall be 0.623 − 0.625 in. and plating thickness shall not exceed a thickness of 0.003 in. on a surface.

Table 1. Reduction Gear Eyebolt − Inspection and Repair (contd)

Condition	Serviceable Limits	Repairable Limits	Disposition
0.6245 − 0.6255 in. diameter hole.	0.6265 in. maximum.	0.6305 in. maximum	Machine inside diameter and electroless nickel plate per WP 018 00 (AMS 2405). Finish hole ID to 0.6245 − 0.6255 in. Maximum plating thickness of 0.003 in.
Corrosion pitting.	Not serviceable.	Not repairable.	Condemn part exceeding serviceable limits.
	Resin Coating Thinner MIL−PRF−3043 39		
Rust inside eyebolt.	Not serviceable.	Any amount.	Polish inside diameter and coat surfaces with MIL−PRF−3043 resin coating.

6. **REDUCTION GEAR EYEBOLT PIN.**

7. REDUCTION GEAR EYEBOLT PIN − INSPECTION.

a. Inspect eyebolt pin. Refer to table 2.

b. Refer to WP 017 00 for magnetic particle inspection (MPI) procedure.

8. REDUCTION GEAR EYEBOLT PIN − REPAIR.

a. Repair of the eyebolt pin is limited to cadmium replating. Refer to table 2, Disposition column.

Table 2. Reduction Gear Eyebolt Pin − Inspection and Repair

Condition	Serviceable Limits	Repairable Limits	Disposition
Damaged threads.	Not serviceable.	Not repairable.	Condemn part exceeding serviceable limits.
Fretting, galling or scoring.	Not serviceable.	Not repairable.	Condemn part exceeding serviceable limits.
Locating diameters:		Not repairable.	Condemn part exceeding serviceable limits.
0.6875−0.6870 in.	0.6865 in. minimum.		
0.6245−0.6240 in.	0.6235 in. minimum.		
0.5610−0.5605 in.	0.5600 in. minimum.		

Table 2. Reduction Gear Eyebolt Pin − Inspection and Repair (contd)

Condition	Serviceable Limits	Repairable Limits	Disposition
Cadmium plating.	Pins shall be plated all over.	Not repairable.	Replate pin all over per WP 018 00 (AMS 2400). All pin dimensions shall be met after plating.
Cracks. MPI indications.	Not serviceable.	Not repairable.	Condemn part exceeding serviceable limits.

9. **STRUT CLEVIS BOLT.**

10. STRUT CLEVIS BOLT − INSPECTION.

a. Inspect clevis bolt. Refer to table 3.

b. Refer to WP 017 00 for magnetic particle inspection (MPI) procedures.

11. STRUT CLEVIS BOLT − REPAIR.

a. No repairs authorized. Replace bolts exceeding serviceable limits.

Table 3. Strut Clevis Bolt − Inspection and Repair

Condition	Serviceable Limits	Repairable Limits	Disposition
Damaged threads.	Not serviceable.	Not repairable.	Condemn part exceeding serviceable limits.
Worn bolt OD.	Minimum of 0.6230 in.	Not repairable.	Condemn part exceeding serviceable limits.
Fretting, galling or scoring.	Not serviceable.	Not repairable.	Condemn part exceeding serviceable limits.
Cracks. MPI indications.	Not serviceable.	Not repairable.	Condemn part exceeding serviceable limits.

DEPOT MAINTENANCE

INSPECTION AND REPAIR

PROPELLER CONTROL LINKAGE (PROPELLER TO COORDINATOR DETAILS)

Reference Material

Magnetic Particle and Fluorescent Penetrant Inspection − Procedures . . . . . WP 017 00
Plating and Surface Treatment of Parts . . . . . WP 018 00

Alphabetical Index

Subject **Page No.**

Introduction 2
Propeller Control Linkage 2
Inspection 2
Repair 2

Record of Applicable Technical Directives

None

1. **INTRODUCTION.**

2. This work package (WP) provides the inspection and repair instructions for the detail parts of the propeller control linkage. The linkage detail parts, covered by this WP, consist of the universal joint (propeller end) to the link rod assembly at the coordinator end. Refer to figure 1.

3. **PROPELLER CONTROL LINKAGE.**

4. CONTROL LINKAGE − INSPECTION. (figure 1)

a. Inspect all detail parts of control linkage. Refer to table 1.

b. Refer to WP 017 00 for magnetic particle inspection (MPI) procedure.

5. PROPELLER CONTROL LINKAGE − REPAIR.

a. Repair detail parts of control linkage. Refer to Disposition column, table 1.

b. Replace parts not within serviceable limits after repair.

Table 1. Propeller Control Linkage − Inspection and Repair

Condition	Serviceable Limits	Repairable Limits	Disposition
Crack indications or non−metallic inclusions. MPI all parts (figure 1).	Light scattered non−metallic indications in a longitudinal direction.	Not repairable.	Condemn part exceeding serviceable limits.
Threads (internal and external) for nicks and burrs.	Not serviceable.	Any amount not resulting in thread removal.	Remove high metal using fine stones and files or chase using appropriate size or die or tap.
Splines (internal and external) for nicks and burrs.	Not serviceable.	Any amount.	Remove high metal. Using fine stones or files.
Prop control rear arm (24) bearing worn and/or fretted.	Not to exceed 1.1812 in. diameter.	Exceeds serviceable limits.	Repair bore by machining 0.006 − 0.010 in. from bore for clean up. Chrome plate per WP 018 00 and machine plated bore to 1.1811 − 1.1807 in. dia and finish to 32 RMS.

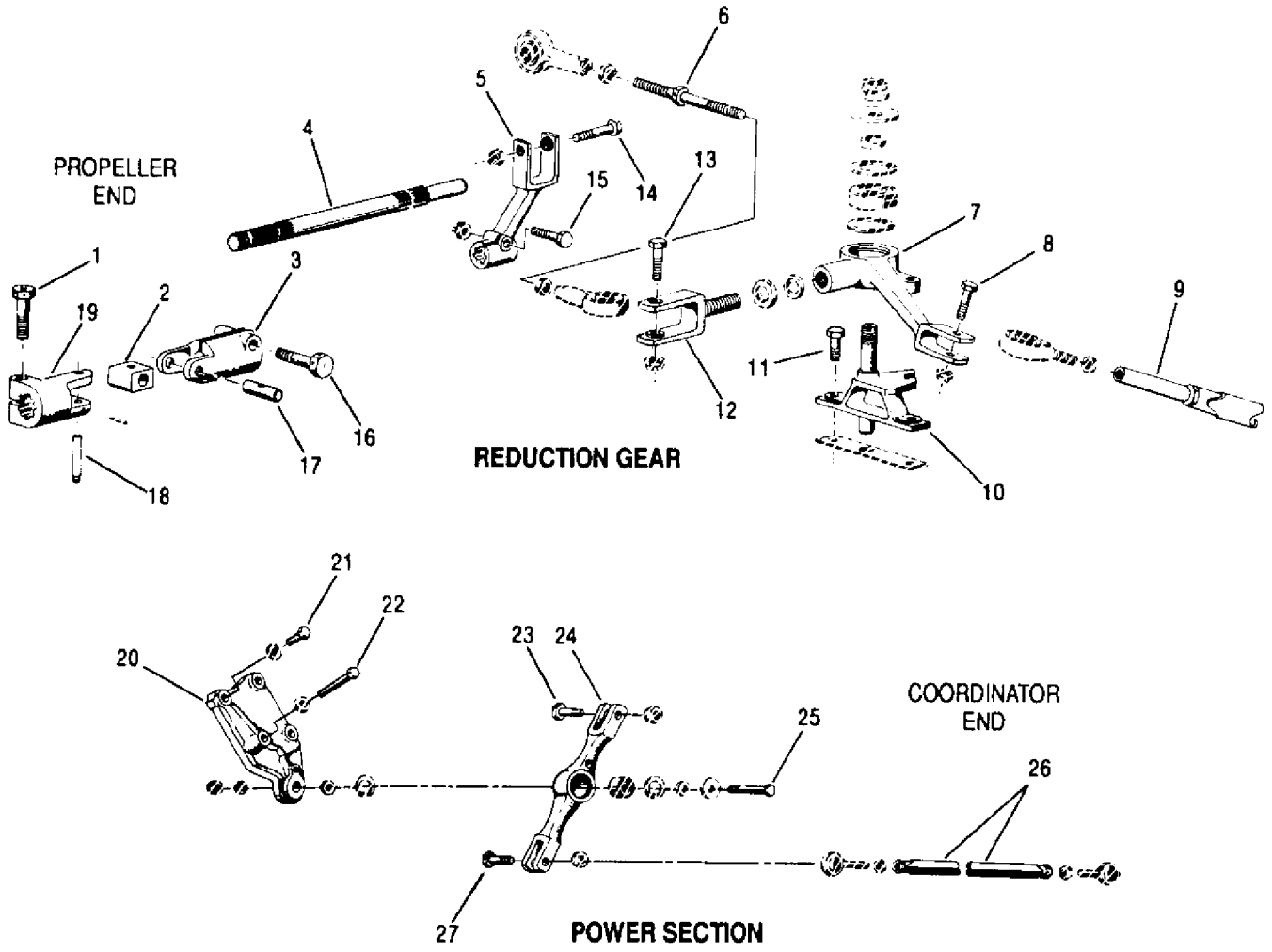

1.	Bolt	13.	Bolt
2.	Universal Joint Block	14.	Bolt
3.	Aft Universal Joint Yoke	15.	Bolt
4.	Forward Prop Control Shaft	16.	Bolt
5.	Front Prop Control Arm	17.	Headless Straight Pin
6.	Control Rod	18.	Headless Straight Pin
7.	Prop Control Intermediate Bellcrank	19.	Forward Universal Joint Yoke
8.	Dolt	20.	Prop Control Rear Bracket
9.	Intermediate Prop Control Link Rod Assembly	21.	Bolt
10.	Intermediate Prop Control Lever Shaft	22.	Bolt
11.	Bolt	23.	Bolt
12.	Intermediate Bellcrank Prop Control Clevis	24.	Prop Control Rear Arm
		25.	Bolt
		26.	Prop Control Rear Welded Link Rod Assembly
		27.	Bolt

Figure 1. Propeller Control Linkage Details − Magnetic Particle Inspection

DEPOT MAINTENANCE

INSPECTION AND REPAIR

OIL SEAL ASSEMBLY (PISTON RING TYPE)
PLAIN ENCASED (OIL) SEALS (CARBON RING TYPE)

Reference Material

None

Alphabetical Index

Subject **Page No.**

Introduction 2
Oil Seal Assembly (Piston Ring Type) 2
Cleaning 2
Inspection and Repair 2
Plain Encased (Oil) Seals (Carbon Ring Type) 3
Anti−Rotation Spring Pin Replacement 5
Binding Carbon Ring Cleaning 5
Inspection and Repair 3
Repair Using Kitted Parts 3

Record of Applicable Technical Directives

None

1. **INTRODUCTION.**

2. This work package (WP) provides the inspection and repair instructions for the oil seal assembly (piston ring type) and plain encased (oil) seals (carbon ring type). These seals are used at the starter drive shaft location in reduction gear assemblies on the T56−A−427 turboprop engine.

3. **OIL SEAL ASSEMBLY (PISTON RING TYPE).**

4. OIL SEAL ASSEMBLY (PISTON RING TYPE) − INSPECTION AND REPAIR.

a. Inspect oil seal assembly. Refer to table 1.

b. Repair oil seal assembly. Refer to disposition column, table 1.

c. Replace oil seal assemblies not within serviceable limits after repair.

Table 1. Oil Seal Assembly (Piston Ring Type) − Inspection and Repair

Condition	Serviceable Limits	Repairable Limits	Disposition
Loose rivets.	Not serviceable.	Not repairable.	Condemn seal exceeding serviceable limits.
Thrust washer ID wear.	1.567 in. max.	Not repairable.	Condemn seal exceeding serviceable limits.
Cracks.	No cracks acceptable except for cracks from rivet holes to flange OD.	Not repairable.	Condemn seal exceeding serviceable limits.
Heat discoloration.	Slight discoloration (bronze to light blue) acceptable.	Not repairable.	Condemn seal with dark blue to black discoloration.
Ring gap in free state.	0.010 in. max. No cleaning required.	Exceeding 0.010 in. Cleaning required.	Clean slot. Refer to paragraph 5, this WP.
Thrustwasher and seal ring axial clearance.	No axial clearance acceptable. Definite friction drag shall be felt when washer and ring are rotated. 0.013 in. feeler gage shall not enter slot in ring ID.	Not repairable.	Condemn seal exceeding serviceable limits.

5. OIL SEAL ASSEMBLY (PISTON RING TYPE) − CLEANING.

Materials Required

Specification No./Part No.	**Nomenclature**
MIL−PRF−23699	Oil, lubricating
MIL−M−7866	Molybdenum disulfide
TT−T−291	Spirits, mineral

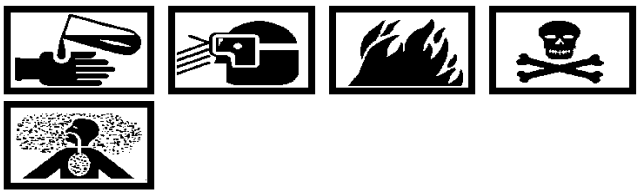

Lubricating Oil, MIL−PRF−23699 **2**

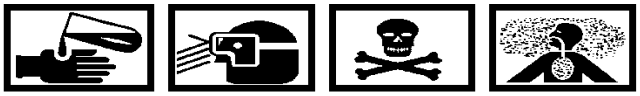

Molybdenum Disulfide Lubricant MIL−M−7866 **19**

Paint Thinner TT−T−291 **8**

a. Clean seal assembly with TT−T−291 mineral spirits. Remove material lodged in ring slot using thin feeler stock.

b. Prepare lubrication mixture of 75% MIL−PRF−23699 oil and 25% MIL−M−7866 molybdenum disulfide. Mix thoroughly.

c. Soak cleaned seal assembly in lubrication mixture. Drain excess mixture and store seal assembly in clean protective container.

6. **PLAIN ENCASED (OIL) SEALS (CARBON RING TYPE).**

7. PLAIN ENCASED (OIL) SEALS (CARBON RING TYPE) − INSPECTION AND REPAIR.

a. Inspect plain encased (oil) seals. Refer to table 2.

b. Repair plain encased (oil) seals. Refer to disposition column, table 2.

c. Replace plain encased (oil) seals not within serviceable limits after repair.

Table 2. Plain Encased (Oil) Seals (Carbon Ring Type) − Inspection and Repair

Condition	Serviceable Limits	Repairable Limits	Disposition
Carbon Ring:			
ID Wear.	(PN 6856117 and 6874912 ch ltr E and earlier) 1.5655 in. max.	Not repairable.	Rebuild seal. Refer to paragraph 8, this WP.
	(PN 6874912 ch ltr F and later) 1.5648 in. max.		Condemn seal exceeding serviceable limits.
Scratches, nicks and dents.	Not serviceable.	Not repairable.	Rebuild (PN 6856117 and 6874912 ch ltr E and earlier) seal. Condemn PN 6874912 ch ltr F and later. Refer to paragraph 8, this WP.
Freedom of radial movement.	No binding acceptable.	See disposition column.	Disassemble and clean seal. Refer to paragraph 9, this WP.
Anti−Rotation Pin:			
Loose or missing.	Not serviceable.	Not repairable.	Install pin. Refer to paragraph 10, this WP.

8. PLAIN ENCLOSED (OIL) SEALS (CARBON RING TYPE) − REPAIR USING KITTED PARTS (Figure 1). This procedure does not apply to seals PN 6874912 change letter F and later. Maximum ID of replacement carbon ring 1.5655 in.

Materials Required

Specification No./Part No.	Nomenclature
MIL−PRF−680, Type II	Solvent, dry cleaning
6858612	Repair parts kit, overhaul, starter shaft seal (1)
MIL−PRF−23699	Oil, lubricating

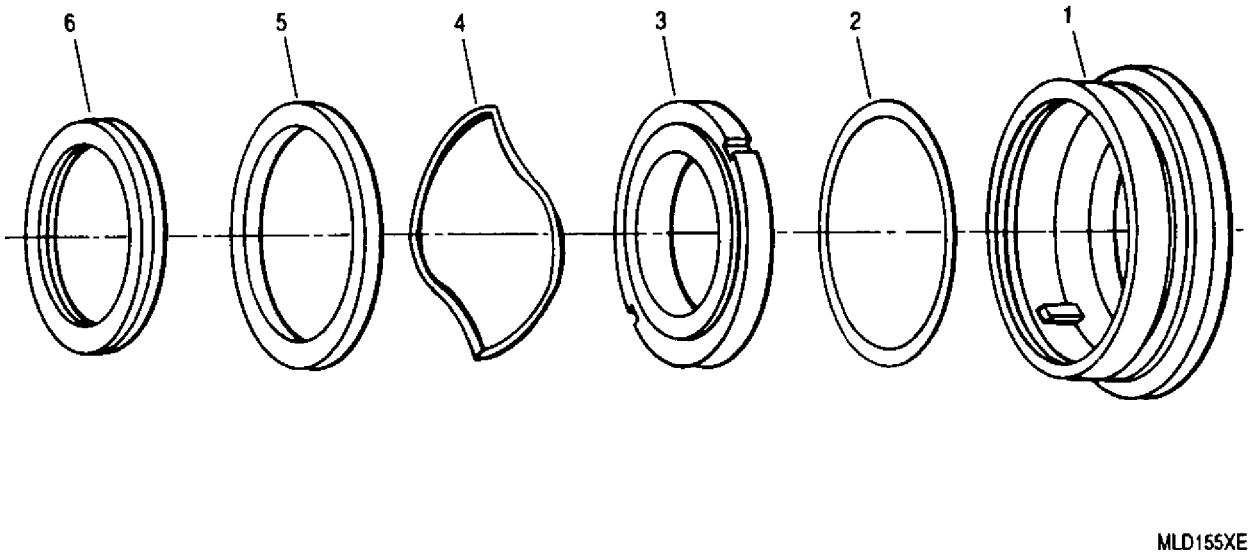

1. Shell Assembly
2. Preformed Packing
3. Adapter Assembly
4. Spring
5. Washer
6. Retainer

Figure 1. Plain Encased (Oil) Seal (Carbon Ring Type) − Repair using Kitted Parts

a. Disassemble seal (figure 1) as follows:

(1) Remove retainer (6) from shell assembly(1).

(2) Remove washer (5), spring (4), adapter assembly (3) and preformed packing (2) from shell assembly (1).

(3) Retain shell assembly. Discard remaining parts.

b. Inspect shell assembly for burrs and foreign material that would cause binding after reassembly. Remove burrs and foreign material.

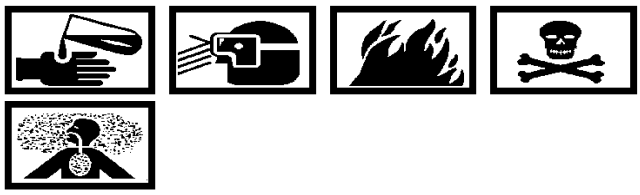

Dry Cleaning Solvent
MIL−PRF−680, Type II **3**

c. Clean shell assembly with MIL−PRF−680, Type II dry cleaning solvent and allow to air dry.

d. Assemble seal (figure 1) using kitted parts as follows:

Lubricating Oil, MIL−PRF−23699 **2**

(1) Coat parts lightly with MIL−PRF−23699 lubricating oil.

(2) Install preformed packing (2) on chamfered OD of adapter assembly (3). Install assembled parts into shell assembly (1) with packing toward shell flange.

(3) Install spring (4) and washer (5) into shell assembly (1) and secure with retainer (6).

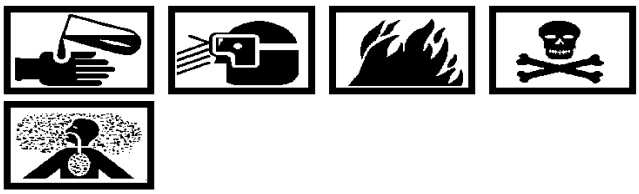

Lubricating Oil, MIL−PRF−23699 2

e. Lubricate seal assembly lightly with MIL−PRF−23699 lubricating oil and store in clean protective container.

9. PLAIN ENCASED (OIL) SEALS (CARBON RING TYPE) − BINDING CARBON RING CLEANING. This procedure provides the instructions for cleaning seals having binding carbon rings. No replacement parts are used.

Materials Required

Specification No./Part No.	Nomenclature
MIL−PRF−680, Type II	Solvent, dry cleaning

a. Disassemble seal. Refer to paragraph 8, this WP. Do not discard parts.

Dry Cleaning Solvent MIL−PRF−680, Type II 3

b. Clean parts with MIL−PRF−680, Type II dry cleaning solvent. Allow parts to air dry.

c. Inspect parts and remove any burrs or foreign material which may cause binding of carbon rings. Wipe parts clean with dry cleaning solvent.

d. Reassemble original parts. Refer to paragraph 8, this WP.

10. PLAIN ENCASED (OIL) SEAL (CARBON RING TYPE) − ANTI−ROTATION SPRING PIN REPLACEMENT. This procedure is applicable only to PN 6874912 plain encased (oil) seal. Pin applications are determined by part number change letter.

Materials Required

Specification No./Part No.	Nomenclature
MS171432	Pin, spring (AR)
MS171462	Pin, spring (AR)

a. Pin part number to seal PN change letter application.

Pin N	Seal PN CHG LTR
MS171432	E and later
MS171462	D and earlier

b. Replace spring pin in seal change letter E and later as follows:

(1) Install applicable PN pin. Pin shall protrude 0.083 − 0.103 in. above adapter surface. If pin is still loose, relocate hole in adapter.

(2) Locate and drill 0.062 − 0.065 in. hole 0.162 in. deep 90° from existing hole. Use a No. 52 drill.

(3) Install replacement pin. Pin shall protrude 0.083 − 0.103 in. above adapter surface.

c. Replace spring pin in seal change letter D and earlier as follows:

(1) Install applicable PN pin. Pin shall protrude 0.083 − 0.103 in. above adapter surface. If pin is still loose, relocate hole in adapter.

(2) Locate and drill 0.078 − 0.081 in. hole 0.162 in. deep 90° from existing hole. Use a No. 47 drill.

(3) Install replacement pin. Pin shall protrude 0.083 − 0.103 in. above adapter surface.

DEPOT MAINTENANCE

INSPECTION AND REPAIR

TORQUEMETER HOUSING ASSEMBLY, BEARING LOCK TUBE, AND BEARING OUTER RING LOCK KEY

Reference Material

Magnetic Particle and Fluorescent Penetrant Inspection − Procedures . . . . . WP 017 00
Plating, Nickel, Electroless, Low Phosphorus . . . . . AMS 2405
Identification Marking Methods . . . . . AS 478

Alphabetical Index

Subject **Page No.**

Bearing Lock Tube 4
  Inspection and Repair 4
Bearing Outer Ring Lock Key 4
  Inspection and Repair 4
Introduction 2
Torquemeter Housing Assembly 2
  Inspection 2
  Pick−up Mounting Block Replacement 2
  Repair 2

Record of Applicable Technical Directives

None

1. **INTRODUCTION.**

2. This work package provides the instructions for inspection and repair of the torquemeter housing assembly, bearing lock tube, and bearing outer ring lock key used on the T56−A−427 turboprop engine.

3. **TORQUEMETER HOUSING ASSEMBLY.**

4. The torquemeter housing, inner and outer shaft assemblies, and safety coupling are a serialized matched set. Do not intermix parts between sets.

5. TORQUEMETER HOUSING ASSEMBLY − INSPECTION.

a. Inspect housing assembly. Refer to table 1.

b. Refer to WP 017 00 for Fluorescent Penetrant Inspection (FPI) procedures.

6. TORQUEMETER HOUSING ASSEMBLY − REPAIR.

Materials Required

Specification No./Part No.	Nomenclature
AMS 3135	Resin, silicone

a. Repair housing assembly. Refer to Disposition column, table 1.

b. Replace housing assembly not within serviceable limits after repair.

7. PICK−UP MOUNTING BLOCK − REPLACEMENT.

Support Equipment Required

Part No./Type Designation	Nomenclature
6797983	Punch, swage, torquemeter external pick−up block attaching bolts
6797984	Support, swaging, torquemeter external pick−up block attaching bolts
——	Wrench, torque (0−200 lb in.)

Table 1. Torquemeter Housing Assembly − Inspection and Repair

Condition	Serviceable Limits	Repairable Limits	Disposition
Cracks or FPI indications.	Not serviceable.	Not repairable.	Condemn housing assembly exceeding serviceable limits.
Nicks and dents.	Not serviceable.	Nicks and dents not exceeding 1/32 in. depth after blending.	Blend to repair.
Heat discoloration.	Judge condition on acceptable shop practices.	Not repairable.	Condemn housing assembly exceeding serviceable limits.
Damaged threads in pick−up mounting block.	Not serviceable.	Any damages to threads.	Repair threads or replace block. Refer to paragraph 7, this WP.
Missing pins in pickup mounting block.	Not serviceable.	Any missing pins.	Replace pins. Refer to figure 4.

Table 1. Torquemeter Housing Assembly − Inspection and Repair (contd)

Condition	Serviceable Limits	Repairable Limits	Disposition
Pitting on flange faces.	0.015 in. max depth and no chain−like pits.	Not repairable.	Vapor blast to remove discoloration and coat with AMS 3135 (silicone resin coating material−400°F (204°C) cure) or equivalent. Condemn housing assembly exceeding serviceable limits.
Key slot worn and/or damaged.	Slot width up to 0.255 in. is acceptable after removing metal/build−up, rough surfaces and edges. There shall be no obvious surface deformation (nicks, dents or scratches).	None.	Enlarge slot to 0.2747−0.2750 in. NOTE: If all damage is not removed rotate housing 180° and mill a new slot 0.2527−0.2530 in. wide. Mask housing and electroless nickel plate slot per AMS 2405 to a width of 0.2480−0.2530 in. located per figure 5.

Materials Required

Specification No./Part No.	Nomenclature
AN121528	Nut (5)
Locquic Primer (Loctite N or T)	Compound, cleaning
Loctite 568	Gasket, plastic
or	
3M EC−776	Sealant
6792745	Bolt (5)

a. Remove mounting block by twisting off nuts at swaged ends.

b. Clean surfaces of replacement mounting block and housing boss, including threads and heads of bolts using Locquic Primer cleaning compound. Allow parts to air dry 3−5 minutes.

c. Apply 3M−EC−776 sealant or Loctite No. 568 plastic gasket, between new mounting block and housing, inside of bolt holes and on thread surface and underside of bolt head.

d. Position replacement mounting block on housing and install new bolts and nuts.

e. Torque nuts to 180−200 lb in. (QA)

f. With bolts substantially backed up, swage the bolt end adequately to retain nut securely using 6797984 swage support (figure 1) and 6797983 punch (figure 2).

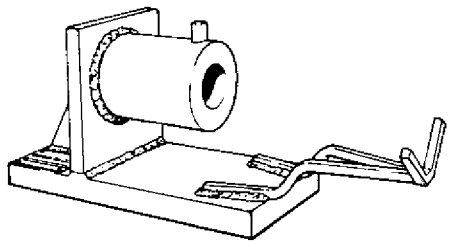

Figure 1. 6797984 Swaging Support

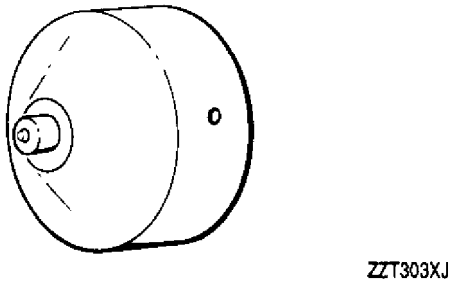

Figure 2. 6797983 Swage Punch

g. The swaged end of the bolt through the pickup mounting pad shall be 0.010 in. below pad surface (figure 3).

h. Check torque in direction of tightening to 180 lb in. after swaging. Retorque and reswage as necessary. (QA)

i. Make a destructive test on one bolt or on an equivalent test specimen. If the test is made on an engine part, the bolt tested shall be replaced. (QA)

j. The following conditions shall be met:

(1) Breakaway torque of the nut in a loosening direction, with bolt head retained, shall be 130 lb in. minimum. (QA)

(2) Back−off torque of the nut, with the bolt head restrained, shall be 30 lb in. minimum. (QA)

(3) After the minimum torque is reached, with continued back−off and the bolt head restrained, the maximum torque shall be 130 lb in. (QA)

k. Transfer mark unit assembly part number and serial number from rear face of old block to rear face of new block. Using any AS 478 Class G marking method, mark UNIT ASSY and assembly part number and SERIAL NO. and serial number on new block.

8. **BEARING LOCK TUBE.**

9. BEARING LOCK TUBE − INSPECTION AND REPAIR.

a. Inspect lock tube. Refer to table 2.

b. Repair lock tube. Refer to Disposition column, table 2.

10. **BEARING OUTER RING LOCK KEY.**

11. BEARING OUTER RING LOCK KEY − INSPECTION AND REPAIR.

a. Inspect outer ring lock key. Refer to table 3.

b. Repair of outer ring lock key is limited to serviceable limits of table 3.

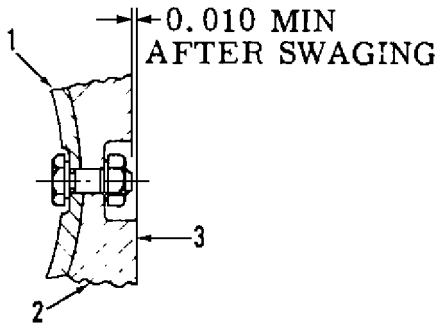

MGB015XH

1. Torquemeter Housing Assembly
2. Torquemeter External Pick−up Mounting Block Assembly
3. Pick−up Assembly Mounting Surface

Figure 3. Pick−up Assembly Mounting Block Attaching Bolt Installation

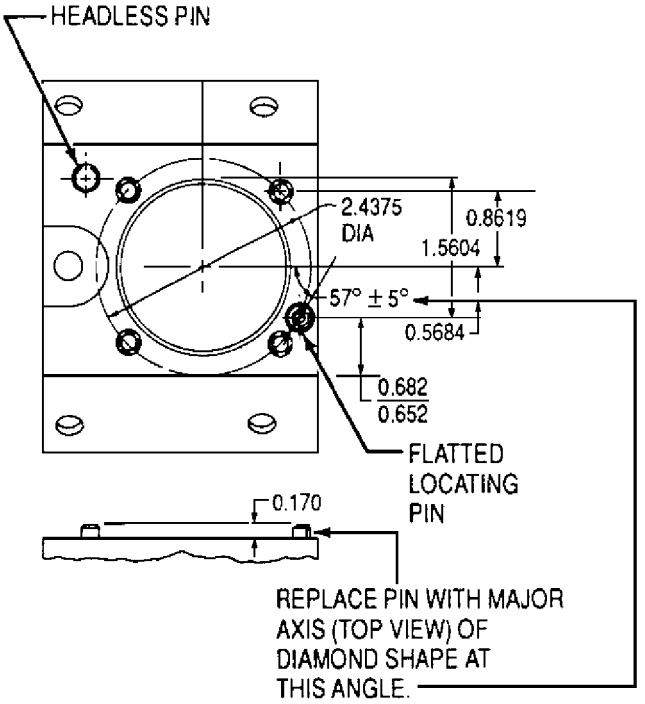

MLB009XG

Figure 4. Pin Location on Torquemeter External Pick−up Block Assembly

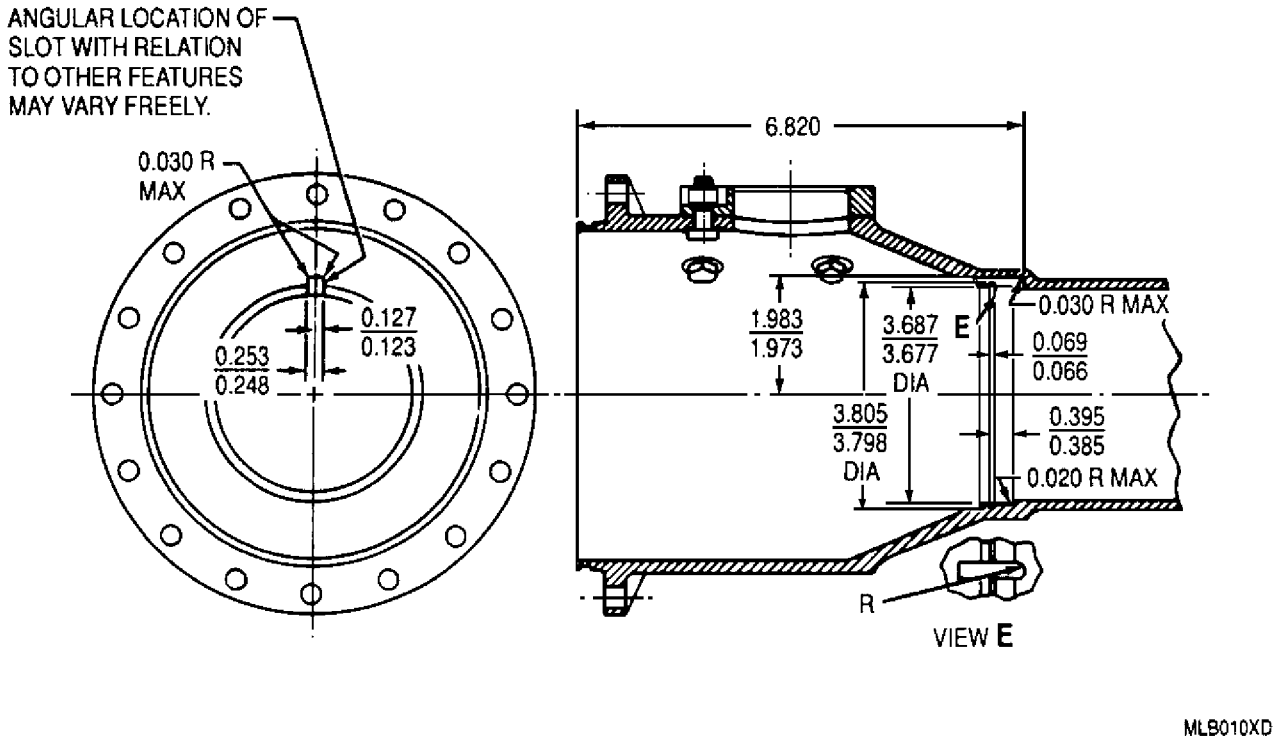

Figure 5. Torquemeter Housing Key Slot

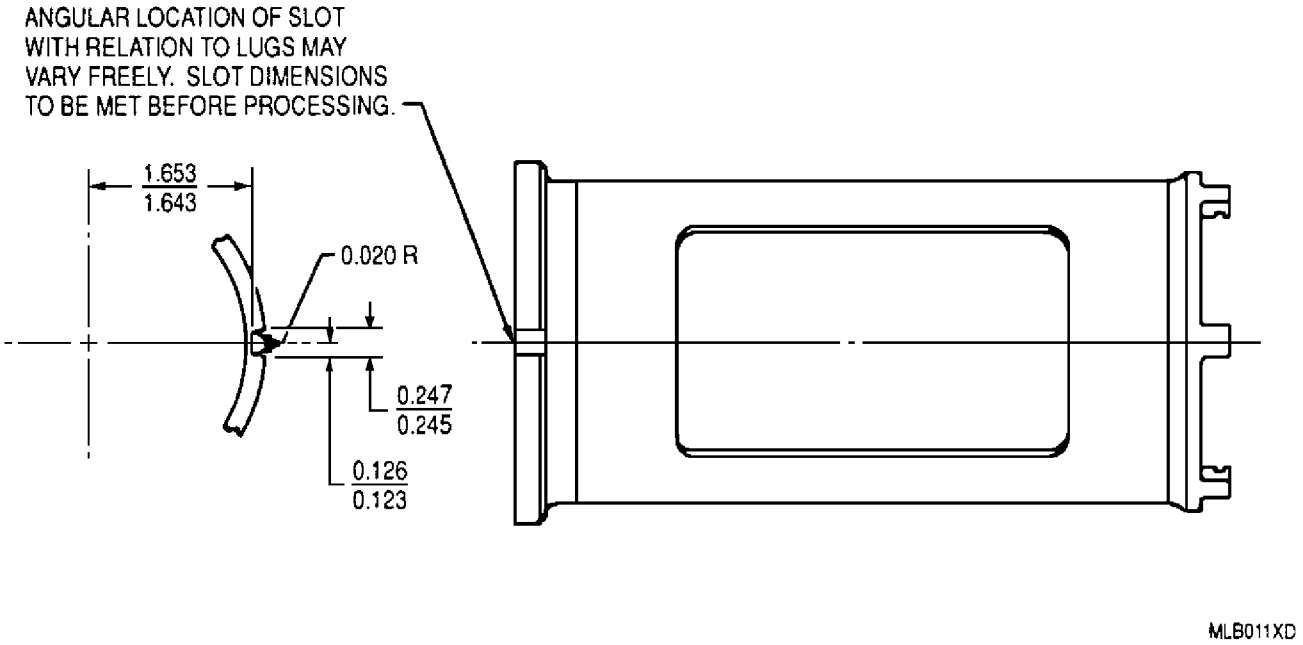

Figure 6. Torquemeter Lock Tube Key Slot

Table 2. Torquemeter Lock Tube − Inspection and Repair

Condition	Serviceable Limits	Repairable Limits	Disposition
Key slot worn and/or damaged.	A slot width up to 0.2470 in. is acceptable after removing metal build up, rough surfaces and edges. There shall be no obvious surface deformation (nicks, dents, or scratches).	Any amount.	Machine a new slot per figure 6, 180° from the original slot. Deform one side of existing slot so it cannot be used. **NOTE** If there are two slots 180° apart, machine a new slot halfway (90°) between them.

Table 3. Torquemeter Bearing Lock Key − Inspection and Repair

Condition	Serviceable Limits	Repairable Limits	Disposition
Key worn and/or damaged.	Key width not less than 0.2470 in. is acceptable after polishing to remove rough edges and metal buildup.	Not repairable.	Condemn key if width is less than 0.2470 in.

DEPOT MAINTENANCE

MAINTENANCE

TORQUEMETER INNER AND OUTER SHAFT ASSEMBLY

Reference Material

Magnetic Particle and Fluorescent Penetrant Inspection − Procedures . . . . . WP 017 00

Alphabetical Index

Subject **Page No.**

Introduction 2
Torquemeter Inner and Outer Shaft Assembly 2
  Assembly 11
  Parts Cleaning 3
  Disassembly 2
Torquemeter Inner Shaft 6
  Exciter Teeth Rework 9
  Inspection 6
  Repair 6
  Replacement 8
  Sleeve (Fiber and Bronze) Replacement 9
Torquemeter Outer Shaft 3
  Exciter Teeth Rework 9
  Inspection 3
  Repair 4
  Replacement 6

Record of Applicable Technical Directives

None

1. **INTRODUCTION.**

2. This work package provides the instructions for maintenance of the torquemeter inner and outer shaft assembly used on the T56−A−427 turboprop engine.

3. **TORQUEMETER INNER AND OUTER SHAFT ASSEMBLY.**

4. The torquemeter housing, inner and outer shaft assemblies, and safety coupling are a serialized matched set. Do not intermix parts between sets.

5. TORQUEMETER INNER AND OUTER SHAFT ASSEMBLY − DISASSEMBLY (figure 1).

Support Equipment Required

Part No./Type Designation	Nomenclature
6797754	Fixture, puller mid−bearing torquemeter shaft
6797755	Wrench, inner shaft plug spanner
6797757	Plate, inner ring puller
6797879	Support, mid−bearing torquemeter shaft
6797880	Holder, spline

CAUTION

Do not damage sleeves (bearings), exciter teeth, or finished surfaces. Maintain the inner shaft, coupling, and outer shaft as a matched set. These parts are not interchangeable with other assemblies.

a. Install inner and outer shaft assembly (11, figure 1) on 6797754 puller fixture (figure 2) and 6797757 inner ring plate (figure 3).

b. Press mid−bearing inner ring (1, figure 1) from the outer shaft.

c. Remove retaining ring (2) from rear of coupling plug (3).

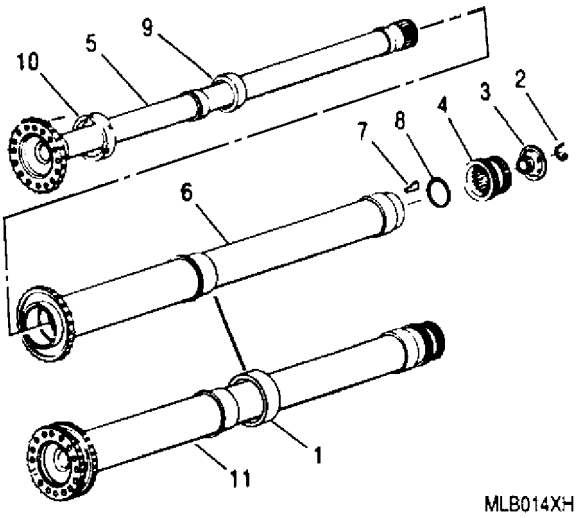

1. Mid−Bearing Inner Ring
2. Internal Retaining Ring
3. Extension Shaft Coupling Plug
4. Engine−to−Torquemeter Shaft Coupling
5. Torquemeter Inner Shaft
6. Torquemeter Outer Shaft
7. Outer Shaft Locating Key
8. Internal Retaining Ring
9. Sleeve (Bronze)
10. Sleeve (Fiber)
11. Torquemeter Inner and Outer Shaft Assembly

Figure 1. Torquemeter Inner and Outer Shaft Assembly−Disassembly

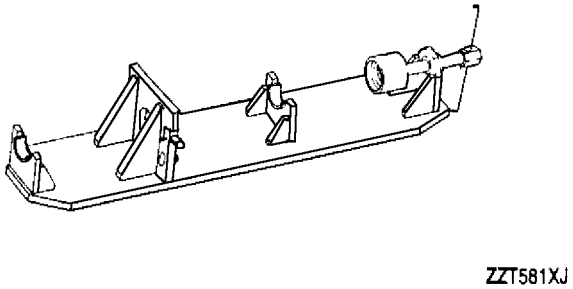

Figure 2. 6797754 Torquemeter Shaft Pulling Fixture

d. Using 6797879 support (figure 4), 6797880 spline holder (figure 5), and 6797755 inner shaft plug spanner wrench (figure 6) remove coupling plug.

e. Remove coupling (4, figure 1).

f. Remove inner shaft (5) from outer shaft (6) using the support and puller fixture (inner shaft moves forward). Maintain concentrical alignment of the shafts during removal.

g. Remove locating key (7).

NOTE

The sleeves (bearings) (9 and 10) are not normally removed unless visual inspection indicates damage or a concentricity check shows wear beyond allowable fit limits.

h. Remove retaining ring (8) from ID of outer shaft.

6. TORQUEMETER INNER AND OUTER SHAFT ASSEMBLY − PARTS CLEANING.

Materials Required

Specification No./Part No.	Nomenclature
MIL−PRF−680, Type II	Solvent, dry cleaning

Dry Cleaning Solvent MIL−PRF−680, Type II **3**

a. Clean parts using MIL−PRF−680, Type II dry cleaning solvent. Allow parts to air dry.

7. **<u>TORQUEMETER OUTER SHAFT.</u>**

8. TORQUEMETER OUTER SHAFT − INSPECTION.

a. Inspect outer shaft. Refer to table 1.

b. Refer to WP 017 00 for magnetic particle inspection (MPI) procedures.

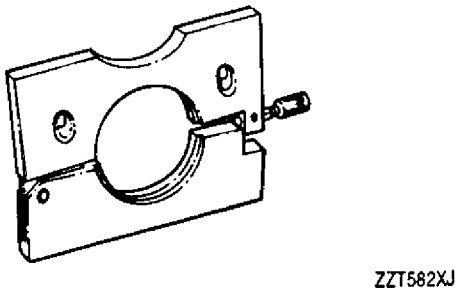

Figure 3. 6797757 Inner Ring Puller Plate

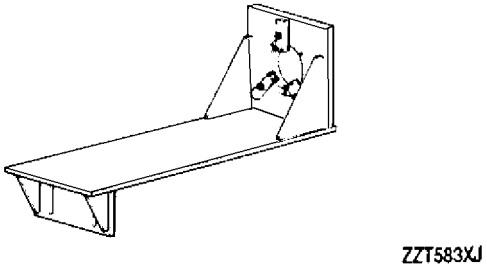

Figure 4. 6797879 Torquemeter Mid−Bearing Shaft Assembly Support

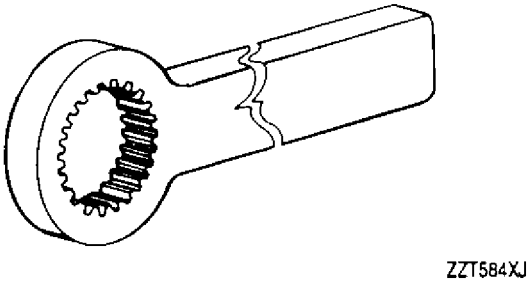

Figure 5. 6797880 Spline Holder

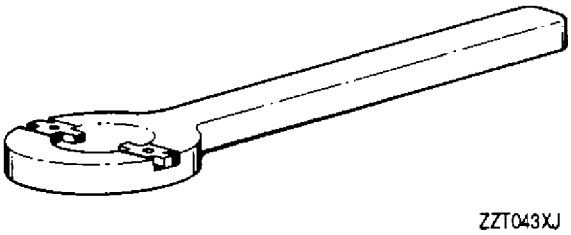

Figure 6. 6797755 Inner Shaft Plug Wrench

9. TORQUEMETER OUTER SHAFT − REPAIR.

Materials Required

Specification No./Part No.	Nomenclature
AMS 2485	Black oxide
MIL−PRF−23827	Grease, lubricating
MIL−PRF−23699	Oil, lubricating
MIL−M−7866	Molybdenum disulfide

a. Repair outer shaft. Refer to Disposition column, table 1.

b. Replace shaft not within serviceable limits after repair.

Table 1. Torquemeter Outer Shaft − Inspection and Repair

Condition	Serviceable Limits	Repairable Limits	Disposition
MPI indications.	Light, scattered and parallel to the material flow lines.	Not repairable.	Condemn shaft having indications which run in a transverse direction to the material flow lines.
Heat discoloration.	Not serviceable.	Not repairable.	Condemn shaft exceeding serviceable limits.
Worn or scored exciter teeth.	Not serviceable.	Any amount.	Rework exciter teeth. Refer to paragraph 15, this WP.
Pitting on exciter teeth wheel.	No pitting allowed.	0.010 in. max depth and cannot be chain−like pits.	Remove minor pitting and discoloration by vapor blasting.

NOTE: Shafting requires rebalancing whenever corrosion is removed.

General Purpose Grease MIL−PRF−23827 20

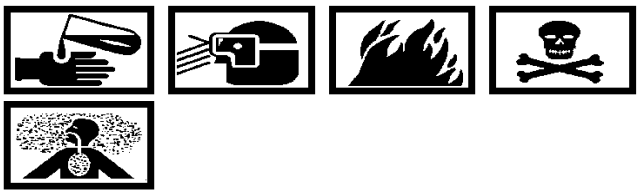

Lubricating Oil, MIL−PRF−23699 2

Table 1. Torquemeter Outer Shaft − Inspection and Repair (contd)

Condition	Serviceable Limits	Repairable Limits	Disposition
Pitting/surface corrosion on shaft.	No pitting/surface corrosion allowed.	0.010 in. max depth and cannot be chain−like pits.	Remove pitting and surface corrosion. Material removal shall be accomplished over an area approximately 1.00 in. either side of discrepancy. Surface texture in area of removal shall be 125 RMS. Reapply black oxide when available. If black oxide is not available then coat scuffed areas with grease. Cover remaining portion of shaft with a light coating of lubricating oil.
Worn locating key.	Min of 0.1910 in. thickness.	Not repairable.	Condemn key exceeding serviceable limits.
Chipped splines.	Not serviceable.	Any amount.	Blend out minor damage. Replace shaft if damage cannot be blended out or if shaft is of doubtful quality.
	Molybdenum Disulfide Lubricant MIL−M−7866		**19**
Defects at sleeve pilot ID.	Not serviceable.	Any amount.	Rework defects as follows: a. Remove defects by machining, not to exceed 2.191 in. for front pilot ID or 1.846 in. for center pilot ID. b. Apply molybdenum disulfide to machined surface and burnish to uniform high glazed surface.

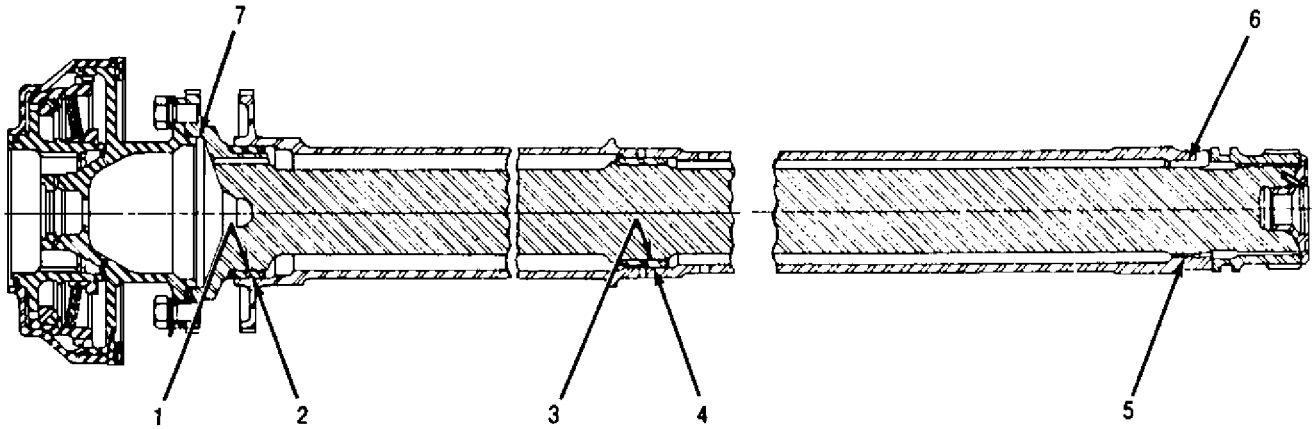

Ref. No.	Description	Minimum	Maximum
1	Inner Shaft − Front Sleeve	0.0055T	0.0015T
2	Outer Shaft − Front Sleeve	0.001L	0.003L
3	Inner Shaft − Center Sleeve (select)	0.0035T	0.0020T
4	Outer Shaft − Center Sleeve	0.0020L	0.0025L
5	Inner Shaft − Outer Shaft	0.003T	0.001T
6	Outer and Inner Shaft Slots − Key (width)	0.0010T	0.0005L
7	Inner Shaft − Safety Coupling	0.0000	0.0015L

Figure 7. Torquemeter Shaft and Coupling Assembly − Fit Limits

10. TORQUEMETER OUTER SHAFT − REPLACEMENT.

a. Rework inner shaft pilot OD as necessary to meet fit requirements (figure 7).

b. Assemble inner shaft and replacement outer shaft. Refer to paragraph 17, this WP.

c. Use existing inner shaft exciter teeth to position and set parts. Grind or hob outer shaft teeth at blank end (figure 8).

d. Mark an X between two teeth on outer shaft, in line with inner shaft existing X mark (figure 8).

e. The average, of four readings 90° apart, circumferential misalignment of exciter teeth leading edges shall not exceed 0.006 in. Leading edges of teeth are the counterclockwise edges when viewed from the rear.

11. **TORQUEMETER INNER SHAFT.**

12. TORQUEMETER INNER SHAFT − INSPECTION.

a. Inspect inner shaft. Refer to table 2.

b. Refer to WP 017 00 for magnetic particle inspection (MPI) procedures.

13. TORQUEMETER INNER SHAFT − REPAIR.

Materials Required

Part No./Type Designation	Nomenclature
AMS 2485	Black oxide
MIL−PRF−23827	Grease, lubricating
MIL−PRF−23699	Oil, lubricating
500 grit	Cloth, emery

a. Repair inner shaft. Refer to Disposition column, table 2.

b. Replace shaft not within serviceable limits after repair.

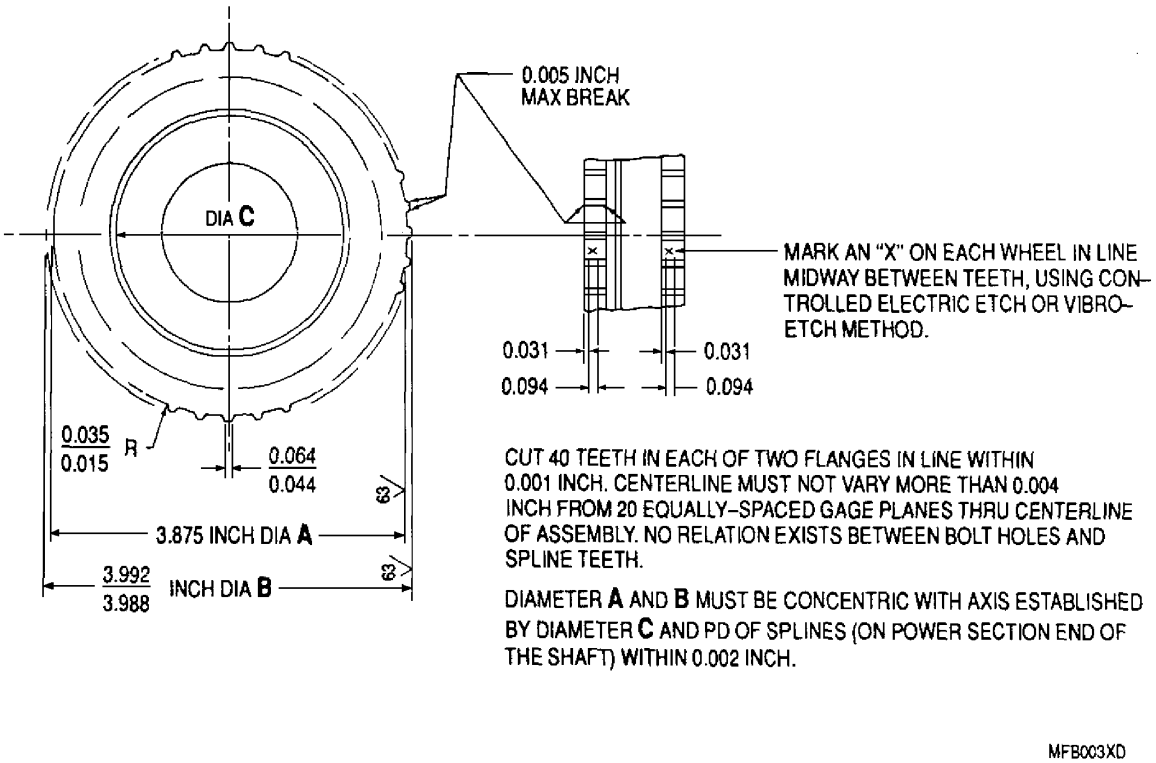

Figure 8. Torquemeter Shaft Exciter Teeth Cutting Limits

Table 2. Torquemeter Inner Shaft − Inspection and Repair

Condition	Serviceable Limits	Repairable Limits	Disposition
MPI indications.	Light, scattered and parallel to the material flow lines.	Not repairable.	Condemn shaft having indications which run in a transverse direction to the material flow lines.
Heat discoloration.	Not serviceable.	Not repairable.	Condemn shaft exceeding serviceable limits.
Worn or scored exciter teeth.	Not serviceable.	Any amount.	Rework exciter teeth. Refer to paragraph 15, this WP.
Pitting on exciter teeth and wheel.	Not serviceable.	0.010 in. max depth and no chain−like pits.	Remove minor pitting and discoloration by vapor blasting.
Pitting on shaft.	Not serviceable.	Not repairable.	Condemn shaft exceeding serviceable limits.
NOTE: Shafting requires rebalancing whenever corrosion is removed.			

General Purpose Grease MIL−PRF−23827 20

Table 2. Torquemeter Inner Shaft − Inspection and Repair (contd)

Condition	Serviceable Limits	Repairable Limits	Disposition
	Lubricating Oil, MIL−PRF−23699	**2**	
Surface corrosion.	Not serviceable.	Light surface corrosion without pitting.	Remove corrosion by lightly polishing corroded area with 500 grit emery cloth. Reapply black oxide when available. If black oxide is not available then coat scuffed areas with grease. Cover remaining portion of shaft with a light coating of lubricating oil.
Chipped splines.	Not serviceable.	Any amount.	Blend out minor damage. Replace shaft if damage cannot be blended out or if shaft is of doubtful quality.
Check maximum runout at mounting.	O−mark shall indicate maximum runout.	Any change of maximum runout.	Relocate O−mark per figure 9, eradicate old O−mark.
Damaged shaft sleeves.	Not serviceable.	Not repairable.	Replace sleeves. Refer to paragraph 16, this WP.

14. TORQUEMETER INNER SHAFT − REPLACEMENT.

a. Assemble replacement inner shaft and outer shaft. Refer to paragraph 17, this WP.

b. Use the existing outer shaft exciter teeth to position and set parts. Grind or hob inner shaft teeth in blank (figure 8).

c. Mark an X between two teeth of the inner shaft in line with the X−mark on the outer shaft.

d. The average, of four readings 90° apart, circumferential misalignment of exciter teeth leading edges shall not exceed 0.006 in. Leading edges of teeth are the counterclockwise edges viewed from the drive spline of the inner shaft.

e. Measure the runout of the inner shaft (figure 9).

NOTE

Calibration number of the replacement inner shaft is located on the front counterbore face of shaft.

f. After grinding teeth, mark calibration number between teeth by deep metal stamp method 0.010 in. max depth. Bottom of letters shall be toward spline end.

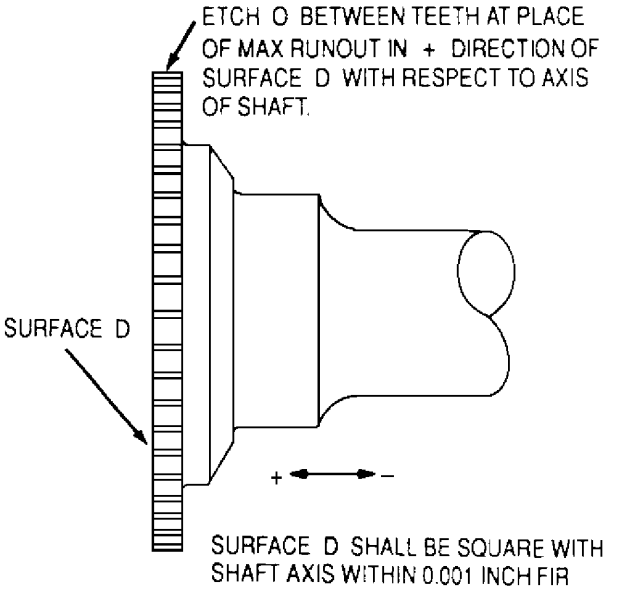

Figure 9. Measuring Torquemeter Inner Shaft Runout

15. TORQUEMETER INNER AND OUTER SHAFT − EXCITER TEETH REWORK.

Support Equipment Required

Part No./Type Designation	Nomenclature
A−A−53713	Stone, sharpening (Arkansas)

a. Evidence of wear on exciter teeth tips shall be removed by concurrently grinding teeth OD on both shafts of matched assembly to same diameter, plus or minus 0.001 in.

b. Material removed shall not reduce teeth OD to less than 3.978 in.

NOTE

Within the following limits, up to three teeth (regardless of location) on each wheel of the shaft assembly may be individually reworked to remove localized damage.

c. To avoid excessive grinding, a maximum of three teeth on each wheel, of a matched shaft assembly, may be 0.002 in. radially below finish minimum OD of remaining teeth.

d. It is permissible to remove the wear on a single tooth providing it is within above limit.

e. Remove burrs and sharp edges from teeth, using an Arkansas stone. Use care in removing burrs.

16. TORQUEMETER INNER SHAFT − SLEEVE (FIBER AND BRONZE) REPLACEMENT.

Support Equipment Required

Part No./Type Designation	Nomenclature
6796988	Fixture, installation
6797876	Plate, flanged sleeve installation and puller
6797877	Pusher and puller, sleeve
6797878	Drift, inner shaft
——	Gloves, insulated

Materials Required

Specification No./Part No.	Nomenclature
MIL−L−15719	Lubricant
MIL−PRF−23699	Oil, lubricating

a. Replace center (bronze) sleeve (figure 10) as follows:

(1) Remove sleeve with 6797876 sleeve installation and puller plate (figure 11) and 6797878 inner shaft drift (figure 12).

(2) Select a new sleeve and check sleeve to shaft fit limit (figure 7, Ref. No. 3). If fit limit cannot be met, select a service replacement sleeve and grind shaft mute to a diameter that will provide sleeve to shaft fit limit.

High Temperature Lubricating Grease MIL−L−15719 52

(3) Apply MIL−L−15719 lubricant on shaft and sleeve.

WARNING

Heated parts can cause skin damage (burns). Handle heated parts with clean insulated gloves.

(4) Position sleeve in 6796988 bronze sleeve installation fixture (figure 13) and heat to 400°F (204°C). Install sleeve on shaft and remove the fixture. Seat sleeve firmly.

b. Replace forward (fiber) sleeve (figure 10) as follows:

NOTE

If the sleeve does not contain a puller groove, remove sleeve by splitting with a screwdriver or similar tool.

(1) Remove fiber sleeve using 6797877 sleeve pusher and puller (figure 14).

High Temperature Lubricating Grease MIL−L−15719 52

(2) Apply MIL−L−15719 lubricant on shaft and fiber sleeve. Install sleeve on shaft using sleeve pusher and puller. Seat sleeve firmly.

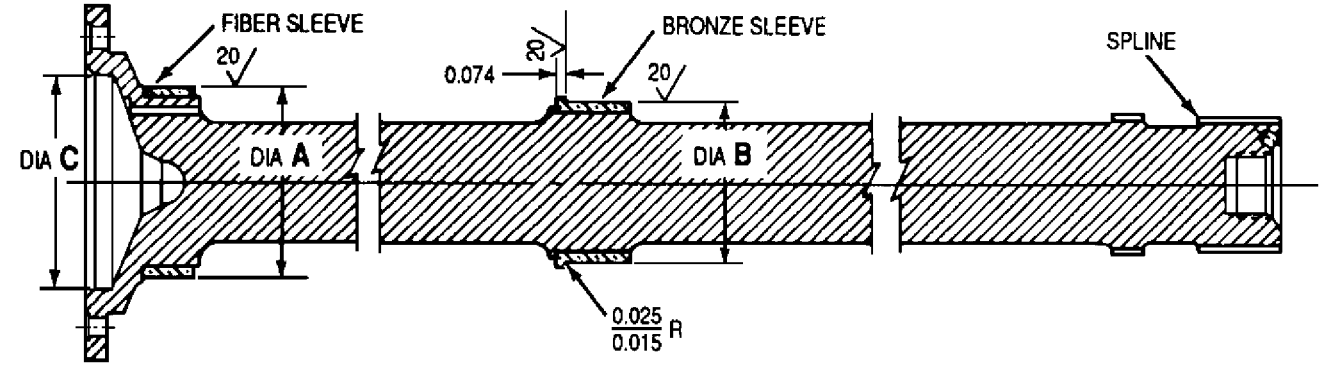

WHEN MOUNTED ON DIA **C** AND PD OF SPLINE
DIA **A** AND DIA **B** SHALL BE CONCENTRIC WITHIN
0.001 IN. FIR.

Figure 10. Torquemeter Inner Shaft Sleeve − Replacement

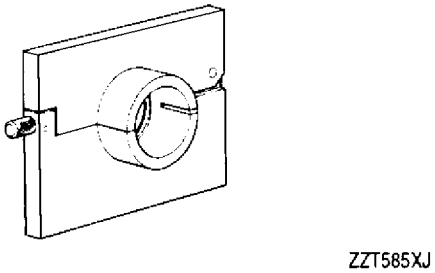

Figure 11. 6797876 Flanged Sleeve Installation and Puller Plate

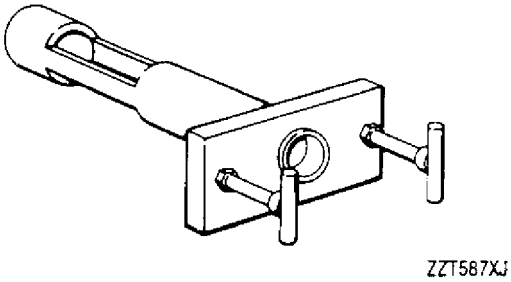

Figure 13. 6796988 Installation Fixture

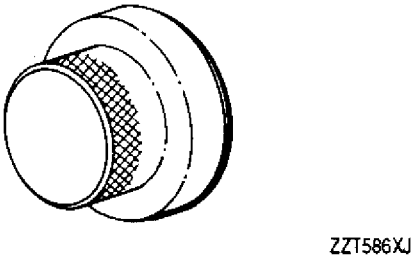

Figure 12. 6797878 Inner Shaft Drift

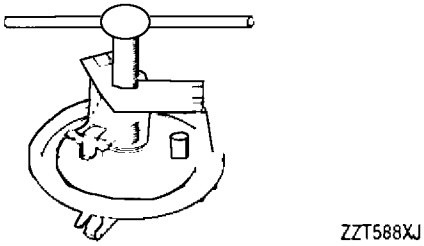

Figure 14. 6797877 Sleeve Pusher and Puller

WARNING

Heated parts can damage skin (burns). Handle heated parts using clean insulated gloves.

Lubricating Oil, MIL−PRF−23699 2

c. If fiber sleeve will not meet fit limits (figure 7, Ref. No. 1), place sleeve in a container of MIL−PRF−23699 lubricating oil and heat at 225°F (107°C) for 24 hours. Install sleeve.

d. Finish grind replacement sleeves as follows:

(1) Grind Dia A (figure 10) to meet fit limits (figure 7, Ref. No. 2) maintaining the concentricity requirements. Break sharp edges 0.010 in.

(2) Grind Dia B (figure 10) to meet fit limits (figure 7, Ref. No. 4) maintaining the concentricity requirements. Break sharp edges 0.010 in.

17. TORQUEMETER INNER AND OUTER SHAFT ASSEMBLY − ASSEMBLY. (figure 15)

Support Equipment Required

Part No./Type Designation	Nomenclature
6796807	Shield, outer shaft heat
6797755	Wrench, inner shaft plug
6797786	Fixture, alignment
6797879	Support, mid−bearing torquemeter shaft
6797880	Holder, spline
6799575	Fixture, outer shaft heating
——	Gloves, insulated
——	Wrench, torque (0−300 lb ft)

Materials Required

Specification No./Part No.	Nomenclature
MIL−L−15719	Lubricant

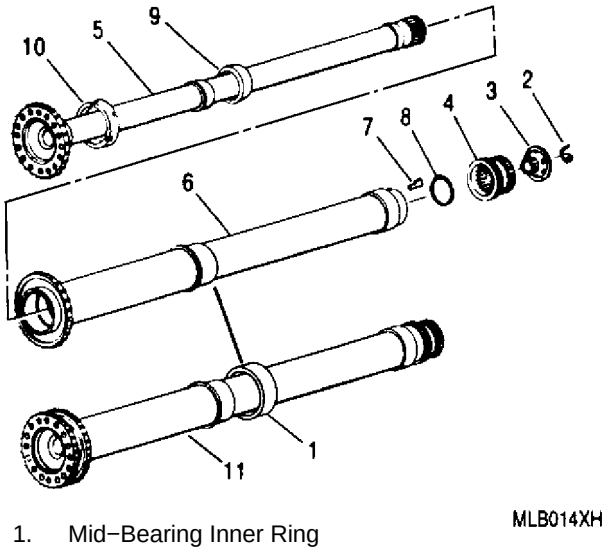

1. Mid−Bearing Inner Ring
2. Internal Retaining Ring
3. Extension Shaft Coupling Plug
4. Engine−to−Torquemeter Shaft Coupling
5. Torquemeter Inner Shaft
6. Torquemeter Outer Shaft
7. Outer Shaft Locking Key
8. Internal Retaining Ring
9. Sleeve (Bronze)
10. Sleeve (Fiber)
11. Torquemeter Inner and Outer Shaft Assembly

Figure 15. Torquemeter Inner and Outer Shaft Assembly − Assembly

NOTE

Outer shafts with two 5/8−in. oil holes have an internal ring groove just in front of the oil holes. The internal retaining ring shall be installed in groove prior to assembly of the inner and outer shafts.

a. Install internal retaining ring (8, figure 15) in ID groove of outer shaft (6).

WARNING

Heated parts can damage skin (burns). Handle heated parts using clean insulated gloves.

High Temperature Lubricating Grease MIL−L−15719

b. Position inner shaft (5) in vertical position using 6797786 alignment fixture (figure 16) and 6797879 inner shaft support. Heat outer shaft (6) to 400°F(204°C) maximum, using 6799575 heating fixture (figure 17). (Do not chill the inner shaft.) Apply MIL−L−15719 lubricant to sleeves (9 and 10, figure 15) on the inner shaft.

c. Align keyways of both shafts and X match mark at exciter teeth OD. Allow outer shaft to slide down over inner shaft and seat firmly.

d. Install 6796807 heat shield (figure 18) over front end at inner and outer shaft assembly. Cool assembly by connecting an air line to quick−disconnect fitting on heat shield.

e. Install the locating key (7, figure 15) by tapping into place and bottoming.

f. Select and install coupling (4). The etched dash number on the OD of the coupling should correspond with the etched dash number on the end of the inner shaft (5).

(1) Alternate procedure for selecting coupling and inner shaft.

(a) Compare the etched two−digit number on the coupling with the etched two−digit number on the end of the inner shaft.

(b) If the difference between these two numbers is five or less they are satisfactory for assembly.

Example: Coupling has −2 and 82 etched on the OD. Inner Shaft has −1 and 78 etched on the end. Another Inner Shaft has −3 and 86 etched on the end. The difference between −1 shaft 78 and −2 coupling 82 is 4 and the difference between −3 shaft 86 and −2 coupling 82 is 4. Therefore, the coupling could be installed with either shaft.

(c) Therefore, a−2 coupling could be used on a −1 or a −3 inner shaft.

g. Use 6797880 spline holder and 6797755 plug spanner wrench, install coupling plug (3) and tighten to the first set of matching holes past fingertight. Install retaining ring (2) and engage securely. (QA).

h. Press the mid−bearing inner ring (1) onto the outer shaft (6).

i. Inspect inner and outer shaft assembly for the following:

(1) The X marks between exciter teeth shall be aligned.

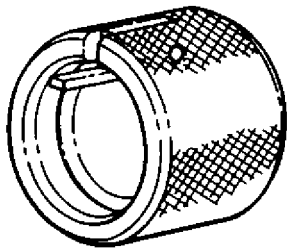

Figure 16. 6797786 Alignment Fixture

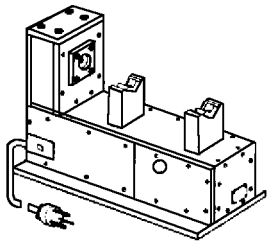

Figure 17. 6799575 Torquemeter Outer Shaft Heating Fixture

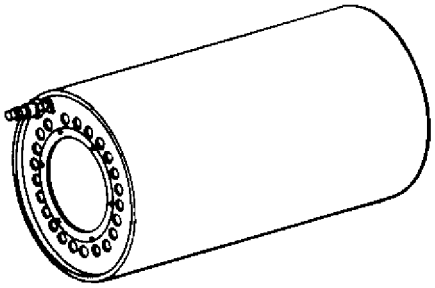

Figure 18. 6796807 Outer Shaft Heat Shield

(2) The circumferential misalignment of the leading edge of the exciter teeth, counterclockwise viewed from the rear, shall not exceed 0.006 in. average.

(3) If misalignment exceeds 0.006 in. apply a torque of 100 lb ft. but in a reverse direction on the inner shaft. (QA)

(4) Check for possibly sleeve sticking.

(5) Rematch a new inner shaft if misalignment is of a permanent nature.

DEPOT MAINTENANCE

MAINTENANCE

SAFETY COUPLING ASSEMBLY

Reference Material

Magnetic Particle and Fluorescent Penetrant Inspection − Procedures . . . . . WP 017 00
Plating and Surface Treatment of Parts . . . . . WP 018 00
Torquemeter Shaft and Coupling Assembly − Dynamic Balance . . . . . WP 066 00
Identification Marking Methods . . . . . AS 478

Alphabetical Index

Subject **Page No.**

Introduction 2
Safety Coupling Assembly 2
  Assembly 12
  Decoupling Torque Check 14
  Disassembly 2
  Parts Cleaning 3
Coupling Housing 3
  Inspection 3
  Repair 3
Coupling Inner, Outer, and Intermediate Members 4
  Inspection 4
  Repair 4
Coupling Spring Seats, Spacer, and Internal and External Rings 4
  Inspection and Repair 4
Safety Coupling Spline Teeth 8
  Intermediate Member Tooth Root Radius Inspection 8
  Lapping Procedure 8

Record of Applicable Technical Directives

None

1. **INTRODUCTION.**

2. This work package provides the instructions for maintenance of the safety coupling assembly used on the T56−A−427 turboprop engine.

3. **SAFETY COUPLING ASSEMBLY.**

4. The torquemeter housing, inner and outer shaft assemblies, and safety coupling are a serialized matched set. Do not intermix parts between sets.

5. SAFETY COUPLING ASSEMBLY − DISASSEMBLY. (figure 1)

Support Equipment Required

Part No./Type Designation	Nomenclature
6796187	Compressor, inner and outer member
6796195	Drift, safety coupling disassembly
6796728	Support, safety coupling disassembly

a. Remove retaining ring (1, figure 1) from housing (17).

b. Remove ball (2) from between outer member (3) and coupling housing (17).

c. Place safety coupling assembly (18) in 6796728 support, rear end down. Using 6796195 drift, remove outer member (3) from coupling housing. (figure 2).

d. Remove O−ring seal (4, figure 1) from outer member.

e. Remove inner member (5) and intermediate member (6) from outer member.

f. Remove packing (7) from inner member.

g. Remove retaining ring (8) from inside inner member.

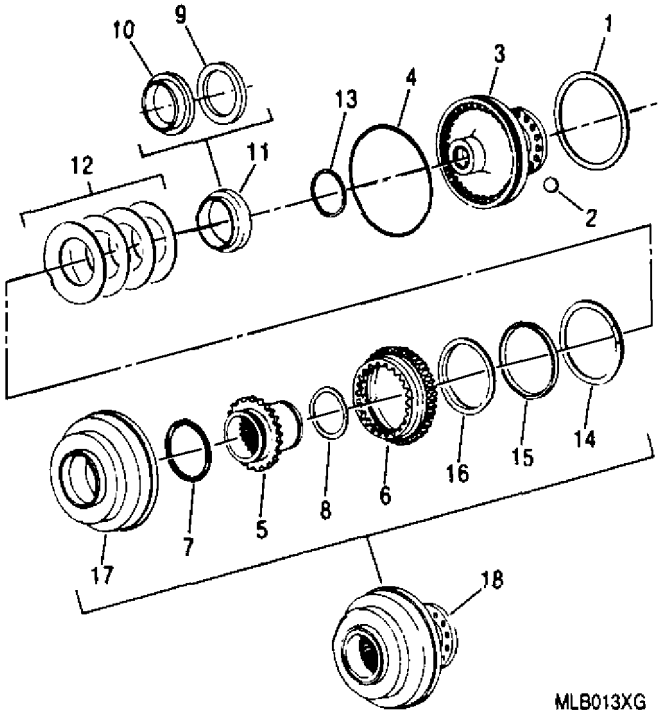

1. Internal Retaining Ring
2. Ball (lock)
3. Outer Member
4. O−ring Seal
5. Inner Member
6. Intermediate Member
7. Preformed Packing
8. Internal Retaining Ring
9. Seat Spacer
10. Spring Seat
11. Spring Seat
12. Springs (Belleville)
13. Snapring
14. Internal Snapring
15. Spherical External Ring
16. Spherical Internal Ring
17. Coupling Housing
18. Safety Coupling Assembly

Figure 1. Safety Coupling Assembly−Disassembly

CAUTION

The spring seat and spacer or spacer shall be compressed only enough to provide clearance for removal of the external snapring. Compressing too far can cause spring hangup or binding.

h. Using 6796187 compressor, compress spring seat (10) and seat spacer (9) or spring seat (11) and springs (12) just far enough to remove snapring (13) (figure 3).

WARNING

When releasing pressure on the fixture, check repeatedly to see that no binding is evident as injury can result from sudden release of parts.

i. Slowly release the fixture pressure. Check for binding as pressure is released.

j. Remove the compressor. Remove spring seat, spacer, springs, and inner member. Discard springs.

k. Remove internal snapring (14, figure 1) which holds spherical rings (15 and 16) in intermediate member. Remove rings.

6. SAFETY COUPLING ASSEMBLY − PARTS CLEANING.

Materials Required

Specification No./Part No.	Nomenclature
TT−T−291	Spirits, mineral

Paint Thinner TT−T−291 **8**

a. Clean all coupling parts using TT−T−291 mineral spirits.

b. Allow parts to air dry.

7. **<u>COUPLING HOUSING.</u>**

8. COUPLING HOUSING − INSPECTION.

a. Inspect coupling housing. Refer to table 1.

b. Refer to WP 017 00 for magnetic particle inspection (MPI) procedures.

9. COUPLING HOUSING − REPAIR.

a. Repair coupling housing. Refer to Disposition column, table 1.

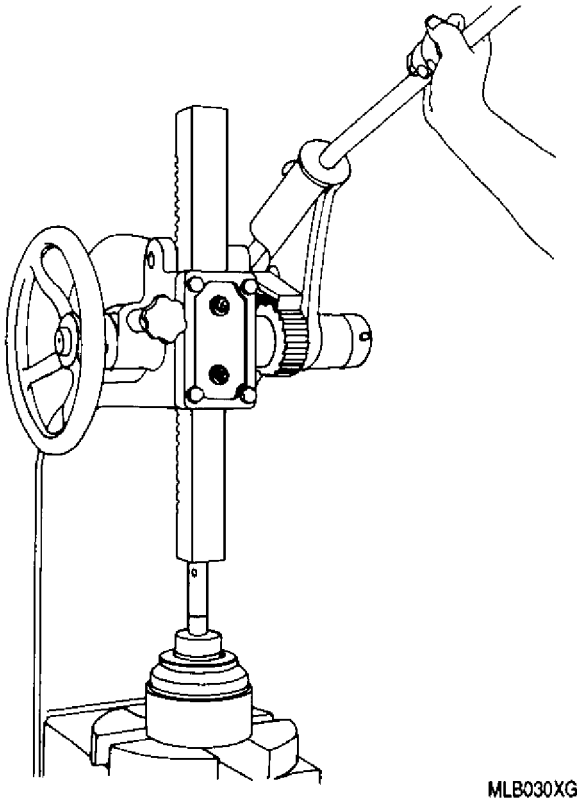

Figure 2. Removing Outer Member from Housing Using 6796728 Support and 6796195 Drift

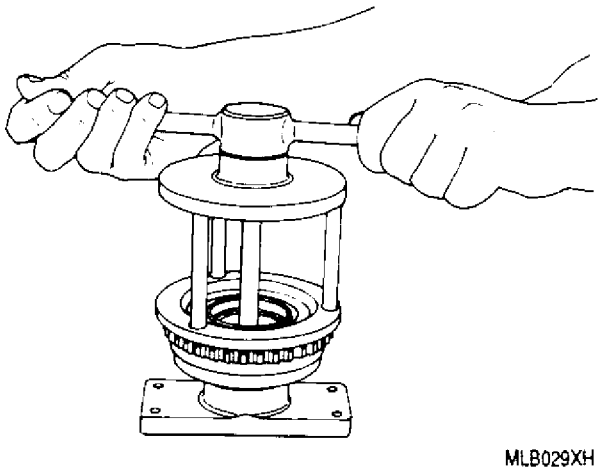

Figure 3. Compressing Coupling Springs to Remove Retaining Ring Using 6796187 Compressor

b. Replace housing not within serviceable limits after repair.

10. **COUPLING INNER, OUTER, AND INTERMEDIATE MEMBERS.**

11. COUPLING INNER, OUTER, AND INTERMEDIATE MEMBERS − INSPECTION.

a. Inspect inner, outer, and intermediate members. Refer to table 2.

b. Refer to WP 017 00 for magnetic particle inspection (MPI) and fluorescent penetrant inspection (FPI) procedures.

12. COUPLING INNER, OUTER, AND INTERMEDIATE MEMBERS − REPAIR.

a. Repair inner, outer, and intermediate members. Refer to Disposition column, table 2.

b. Replace members not within serviceable limits after repair.

13. **COUPLING SPRING SEAT, SPACER, AND INTERNAL AND EXTERNAL RINGS.**

14. COUPLING SPRING SEAT, SPACER, AND INTERNAL AND EXTERNAL RINGS − INSPECTION AND REPAIR.

a. Inspect spring seats, spacer, and rings. Refer to table 3.

b. Repair spring seats, spacer, and rings. Refer to Disposition column, table 3. Replace parts not within serviceable limits after repair.

Table 1. Safety Coupling Housing − Inspection and Repair

Condition	Serviceable Limits	Repairable Limits	Disposition
MPI indications.	Not serviceable.	Not repairable.	Condemn housing exceeding serviceable limits.
Wear, fretting, or scoring on ID.	4.752 in. max diameter.	Exceeds serviceable limits.	Polish or machine to remove all signs of wear, fretting or scoring. Keep material removed to a minimum. Repair ID with chrome or electroless nickel plate. Refer to WP 018 00. Plating thickness shall not exceed 0.005 in. after finish machining per figure 4.
	Diameter A: 2.505 in. max.	Exceeds serviceable limits.	Grind Diameter A to 2.515−2.520 in. Chrome plate diameter. Refer to WP 018 00. Grind diameter A to 2.501−2.500 in. with a 16 RMS surface finish. Diameter A shall be concentric with Diameter B within 0.002 in. FIR. MPI after grinding.
Ball lock groove wear.	0.010 in. max step.	Exceeds serviceable limits.	Blend both sides of groove at approximately 45° to render groove inoperable. Machine a new groove 180° from original groove per figure 4. Subsequent grooves shall be located 90° from original groove.

Table 2. Coupling Inner, Outer, and Intermediate Member − Inspection and Repair

Condition	Serviceable Limits	Repairable Limits	Disposition
Galled or chipped spline teeth.	Not serviceable.	Not repairable.	Condemn part exceeding serviceable limits. Lap new part. Refer to paragraph 17, this WP.
MPI indications.	Light, scattered and parallel to the material flow lines.	Not repairable.	Condemn part having non−metallic indications which are: a. Open in the radii, if showing fatigue−type progression. b. Extending into root corners of the spline teeth. c. Open and breaking into grooves, slots or holes, if showing appreciable depth. Lap new part, refer to paragraph 17, this WP.
Wear on inner member at rear face of external helical splines.	Not serviceable.	Min of 0.158 in. spline tooth and web thickness with a surface finish of at least 32RMS.	Grind shoulder produced by wear to 2.980−3.020 in. diameter with corner radius of 0.128−0.248 in. Break sharp edges on spline teeth that were created by wear pattern.
IR after part number of intermediate member.	IR after part number of intermediate member (part has previously met inspection requirements of paragraph 16).	0.010 in. radius or greater in root radius of internal helical spline.	Condemn parts which do not meet inspection requirements of paragraph 16.
Intermediate Member.	No cracks permitted.	Not repairable.	FPI overall for cracks. Inspect gear teeth root radii for cracks. (Refer to figure 5.) Condemn member if cracks are found.
Straight spline wear:			
Inner member.	Maximum of 0.005 in. wear step; no burrs or sharp edges permitted.	Not repairable.	Light stoning to remove burrs or sharp edges. Condemn part exceeding serviceable limits
Intermediate member.	Minimum PD of 4.6632 in. over 0.216 in. diameter pins. No burrs or sharp edges permitted.	Not repairable.	Light stoning to remove burrs or sharp edges. Condemn part exceeding serviceable limits.
Outer member.	Maximum PD of 4.0822 in. over 0.216 in. diameter pins. No burrs or sharp edges permitted.	Not repairable.	Light stoning to remove burrs or sharp edges. Condemn part exceeding serviceable limits.

Table 2. Coupling Inner, Outer, and Intermediate Member − Inspection and Repair (contd)

Condition	Serviceable Limits	Repairable Limits	Disposition
Front face of outer member from hub of inner member.	0.015 in. deep.	Not repairable.	Condemn part exceeding serviceable limits.
Decoupling burrs.	Not serviceable.	Any burr.	Stone lightly to remove all decoupling burrs and polish helical splines. Refer to paragraph 17, this WP.
Damaged retainer rings.	Not serviceable.	Not repairable.	Condemn rings exceeding serviceable limits.
Outer member wear, fretting, or scoring:			
Diameter A, figure 6.	1.247 in. min diameter.	Exceeds serviceable limits.	Polish or machine to remove all signs of wear, fretting, or scoring. Keep material removed to a minimum. Repair diameters A, B, or D with chrome plate or electroless nickel plate per WP 018 00. Plating thickness shall not exceed 0.005 in. after finish machining (figure 6).
Diameter B, figure 6.	2.499 in. min diameter.		
Diameter D, figure 6.	4.748 in. min diameter.		
Outer member ball lock groove wear.	Maximum step of 0.010 in.	Exceeds serviceable limits.	Blend both sides of groove at approximately 45° to render groove inoperable. Machine new groove 180° from original groove (figure 6). Subsequent grooves shall be located 90° from original groove.
Check maximum runout at mounting flange, Surface C (figure 6).	O−mark shall indicate maximum runout.	Any change of maximum runout.	Relocate O−mark (figure 6); eradicate old O−mark.
Scoring or galling of inner member 2.279−2.280 in. diameter. (spring seat diameter)	Not serviceable.	Any amount.	Repair diameter with chrome plate, refer to WP 018 00. Plating thickness shall not exceed 0.005 in. after finish grinding. Maintain a surface finish of 16 RMS. Diameter shall be concentric with internal spline PD within 0.002 in. FIR.

Table 3. Coupling Spring Seat, Spacer, and External and Internal Rings− Inspection and Repair

Condition	Serviceable Limits	Repairable Limits	Disposition
Scratches or burrs.	Not serviceable.	Any light scratches or burrs.	Light scratches or burrs shall be reworked by blending.
Wear on spring seat pilot OD (2.446−2.445 in. dia).	Max depth of 0.003 in. with smooth surface and no raised edges.	Any wear exceeding the serviceable limits.	Rework seats by chrome plating (WP 018 00) then grind to finish size.

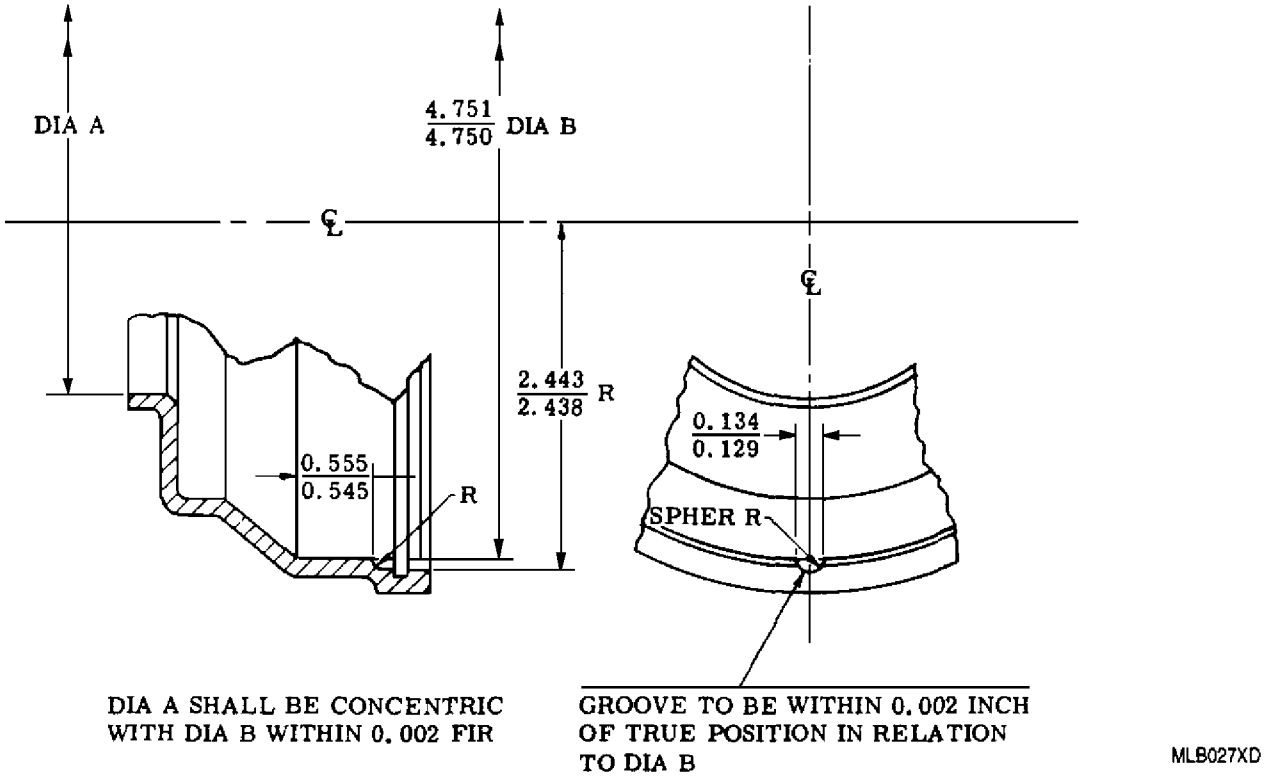

Figure 4. Safety Coupling Housing − Rework

15. **SAFETY COUPLING SPLINE TEETH.**

16. SAFETY COUPLING SPLINE TEETH − INTERMEDIATE MEMBER TOOTH ROOT RADIUS INSPECTION.

Support Equipment Required

Part No./Type Designation	Nomenclature
——	Gage, radius, standard template
——	Shadowgraph

NOTE

This is a one time inspection. Inspection not required if part is marked IR after the part number.

a. Place intermediate member in shadowgraph viewing area. Turn part 30° to the direction of the light so light shines through the center of the part and squarely through the helical internal spline teeth. Focus the image on the screen.

b. Measure the tooth root radius on the pressure side of the helical splined gear teeth (figure 5) with a standard template radius gage. Measurements shall be taken at four locations approximately 90° apart.

c. Condemn intermediate member if any measurement is less than 0.010 in. If radii are 0.010 in. or greater part is acceptable. Permanently mark IR after the part number per AS478−CL−M or 2D1 except 0.003 in. max depth.

17. SAFETY COUPLING SPLINE TEETH − LAPPING PROCEDURE. Rework splined member and all new replacement parts by lapping with mating parts as follows:

Support Equipment Required

Part No./Type Designation	Nomenclature
6796997	Fixture, lapping
6796187	Compressor, inner and outer member

Materials Required

Specification No./Part No.	Nomenclature
MIL−M−7866	Molybdenum Disulfide (Molykote)
MIL−PRF−23699	Oil, lubricating
SAE 30	Oil
TT−T−291	Spirits, mineral
600 grit	Lapping compound, Crystolon (CAGE 06565)
6738054	Spring, safety coupling (1)
MIL−PRF−23827	Grease, lubricating

NOTE

Lapping should not be required prior to the decoupling test on coupling assembly Part No.'s 6842399 and 6841049 if no parts were replaced or splines reworked. Lapping of the coupling assembly is only required when any splined part is replaced.

a. Use a lapping compound of the following mixture:

Molybdenum Disulfide Lubricant MIL−M−7866	**19**
Crystolon compound	3.1 oz
MIL−M−7866 (Molykote)	13.1 oz
SAE 30 oil	7.0 oz

b. Mark an alignment mark (O) on any one outer member spline tooth front face and front faces of any two adjacent intermediate member spline teeth, if such marks are not present. Use manual shallow vibro peen method per AS 478 except depth is 0.003 in. max.

c. Apply a liberal amount of lapping compound to splines and helical teeth while assembling inner, intermediate and outer members.

(1) Install internal retaining ring (8, figure 1) in inner member (5).

(2) Insert internal and external spherical rings (15 and 16) in the intermediate member (6) and secure with retaining ring (1).

(3) Position intermediate member over the inner member.

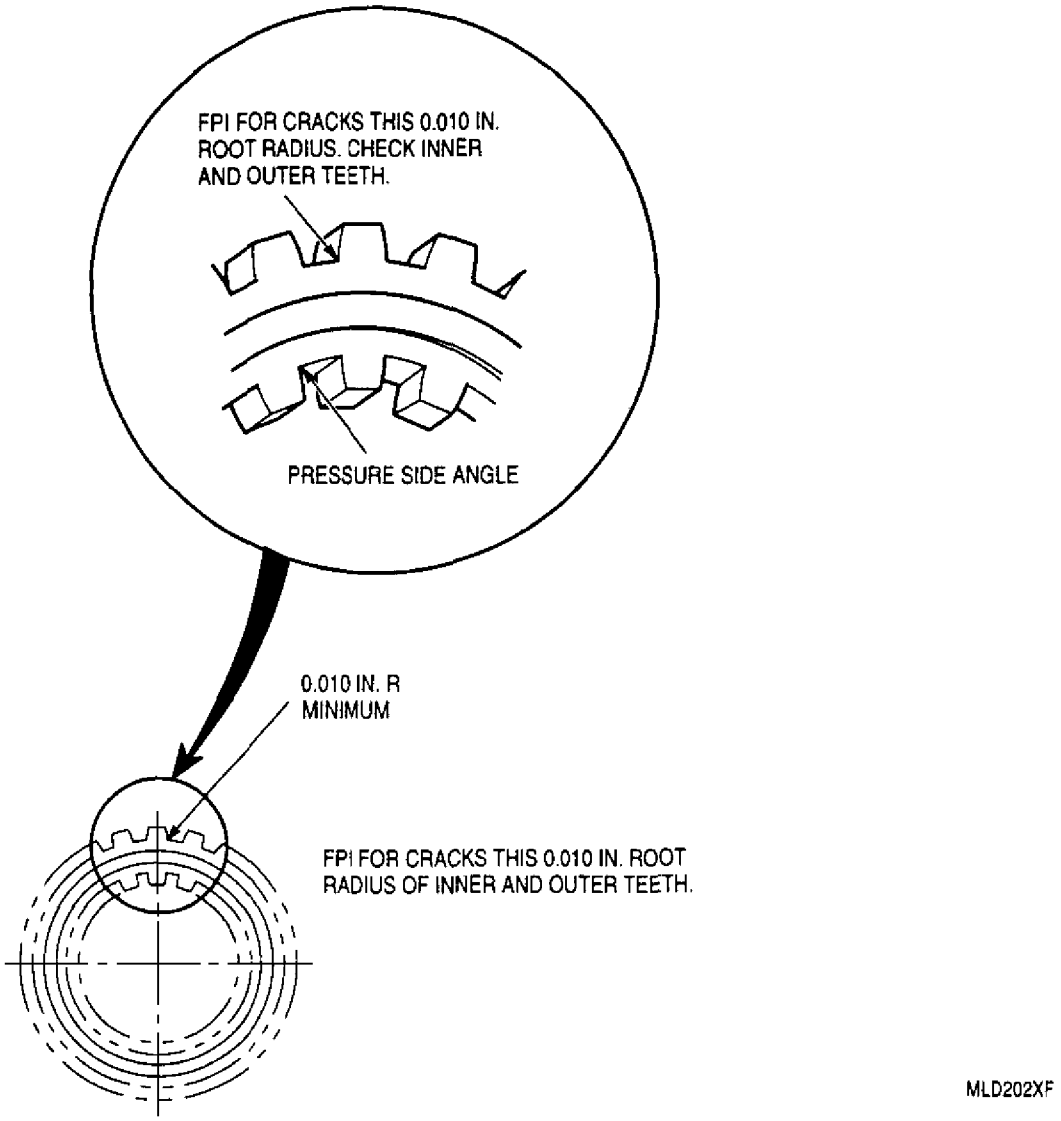

Figure 5. Safety Coupling Intermediate Member − Inspection

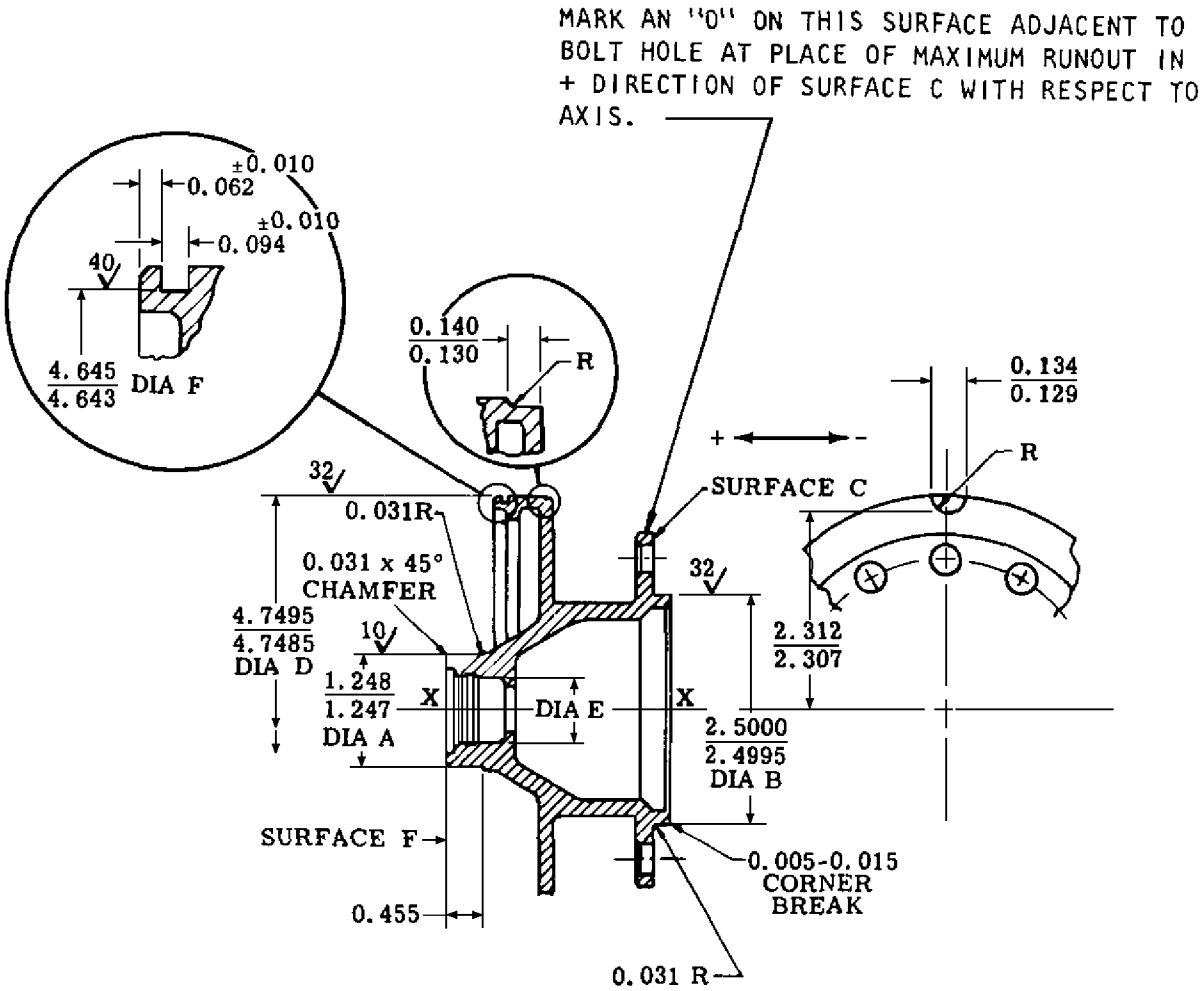

DIAMETERS *A* AND *B* ESTABLISH AXIS X-X.
SURFACE *C* MUST BE SQUARE WITH AXIS WITHIN 0.0005 INCH.
DIAMETERS *D*, *E* AND F MUST BE CONCENTRIC WITH AXIS WITHIN 0.002 INCH.
SURFACE *F* MUST BE SQUARE WITH AXIS WITHIN 0.001 INCH.

Figure 6. Safety Coupling Outer Member Rework

NOTE

The lapping spacer replaces the spring seat during the lapping procedure. The spacer is detail−42 of 6796997 lapping fixture. A periodic check is required to maintain spacer dimension, 0.359 − 0.351 in. (figure 7).

(4) Install one new safety coupling spring with the ID cup facing rear. Insert detail−42 lapping spacer against the spring.

WARNING

Be sure the snapring is properly engaged before removing the compressor tool. Injury could result from sudden release of parts.

(5) Compress the springs slowly using 6796187 inner member compressor tool (figure 3). Install snapring (13) to retain detail−42 special spacer and spring seat on the inner member. Remove compressor tool.

(6) Check assembly of inner and intermediate members for end play between helical teeth. If end play exists, disassemble inner and intermediate members and replace spring.

General Purpose Grease MIL−PRF−23827 20

(7) Apply MIL−PRF−23827 grease to splines of intermediate and outer member. If splines are to be lapped, apply lapping compound instead of grease.

(8) Install outer member (3, figure 1) over the intermediate member with alignment marks (O) aligned.

d. Lap the safety coupling splines in the lapping fixture as follows:

(1) Remove lapping fixture driving dog (detail −12). Slide sleeve (detail −31) and driver (detail −41) upward and install safety coupling over dowel pins in yoke (detail −44).

(2) Lower driver into safety coupling splines.

(3) Install driving dog through sleeve and output shaft.

(4) Position vibration mounting plate (detail −11) against driver and hold in place with clamps (figure 8).

(5) Set time to control desired lapping time. Lapping time shall always be kept to a minimum.

(6) Open air valve to the pneumatic vibrator.

(7) Push motor start button.

(8) At completion of lapping turn off vibrator.

(9) Remove the lapping fixture driving dog and remove the safety coupling from the fixture.

(10) Disassemble coupling to remove the lapping fixture detail −42 spacer.

Paint Thinner TT−T−291 8

(11) Clean lapping compound from all parts with TT−T−291 mineral spirits and allow to air dry.

e. Helical spline teeth (figure 9) acceptable lapping limits:

(1) A minimum of 21 teeth shall have at least 40 percent of tooth Face A lapped.

(2) The Corner B formed by the intersection of surfaces A and C shall not exceed 0.035 in.

(3) There shall not be any evidence of localized pressure of scuffing along the teeth edges.

(4) Surface finish shall not exceed 16 RMS.

f. Straight spline teeth acceptable lapping limits:

(1) Minimum of 25 spline teeth shall have at least 70 percent of each tooth face lapped.

(2) Surface finish shall not exceed 16 RMS.

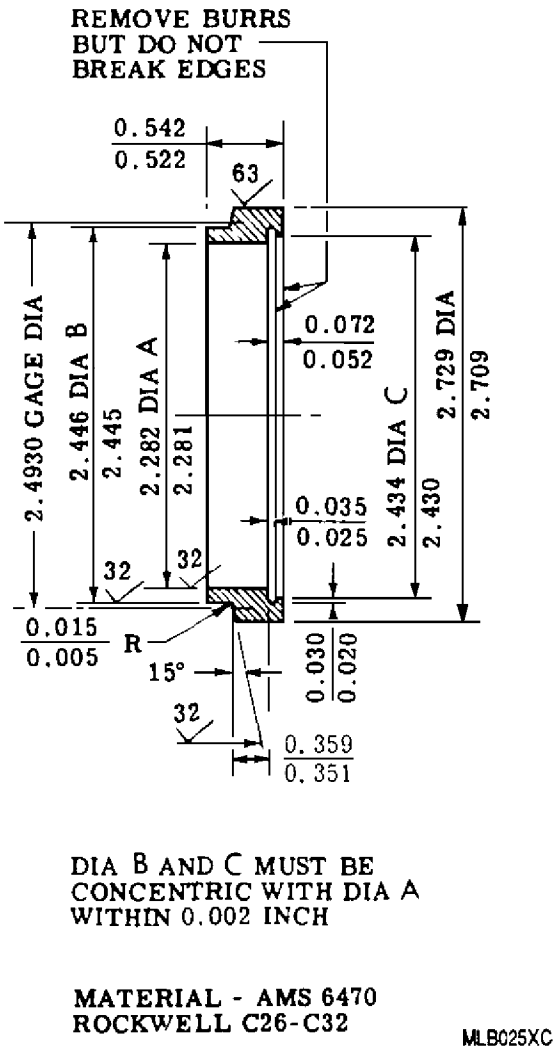

Figure 7. 6796997−42 Safety Coupling Lapping Spacer

Paint Thinner TT−T−291 **8**

g. Disassemble the inner, intermediate, and outer members. Clean parts in TT−T−291 mineral spirits to remove the lapping compound and allow to air dry.

h. After the safety coupling members have been reworked as described above, or after any member has been replaced, assemble the coupling and perform a decoupling torque check. Refer to paragraphs 18 and 19, this WP.

18. SAFETY COUPLING ASSEMBLY − ASSEMBLY. (figure 1)

Support Equipment Required

Part No./Type Designation	Nomenclature
6796187	Compressor, inner and outer member

Materials Required

Specification No./Part No.	Nomenclature
MIL−M−7866	Molybdenum Disulfide (Molykote)
6738054	Spring (4)

NOTE

Identify each safety coupling assembly by the helical spline angle of the inner and intermediate members. The specific angle information is required to check the decoupling torque of the safety coupling per paragraph 19. The inner and intermediate members are available in either 27 or 30 degree helical spline angles. Refer to table 4 for helical spline angle identification.

Table 4. Safety Coupling Inner and Intermediate Helical Spline Angle

Inner Member Part Number	Helical Spline Angle	Intermediate Member Part Number
6824204	27	6783226
6842120	30	6842119

a. Install internal and external spherical rings (15 and 16, figure 1) in intermediate member (6) and secure with internal snapring (14). Install internal snapring (14) with part number out.

Molybdenum Disulfide Lubricant
MIL−M−7866 **19**

NOTE

Apply MIL−M−7866 dry molykote to the spline and helical teeth and between springs while assembling the safety coupling.

b. Install inner member (5) in intermediate member (6). Apply a liberal amount of MIL−M−7866 dry Molykote to helical teeth.

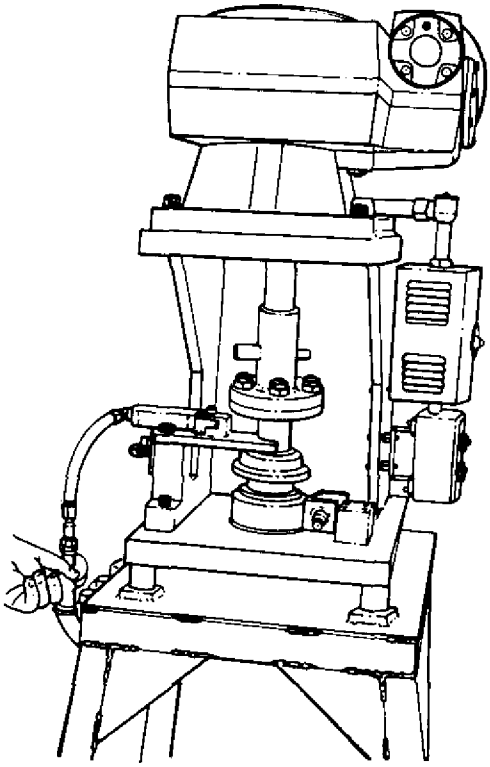

MLB026XG

Figure 8. Safety Coupling Assembly Installed in 6796997 Lapping Fixture

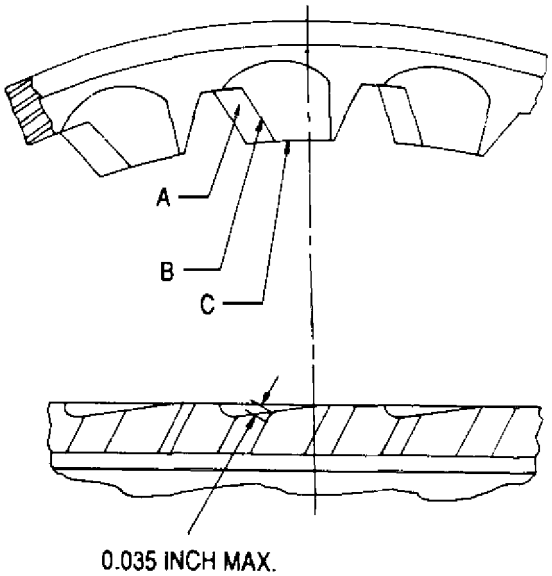

MLB031XG

Figure 9. Spline Lapping Areas

CAUTION

Only new springs are to be used in the safety coupling assembly. Used springs shall be condemned.

c. Measure free state height of each new spring (12) prior to installation. The minimum free height of each spring shall not be less than 0.157 in. Brush each spring with a light coat of dry Molykote and install the new springs with the ID cup facing the rear. Install spring seat (10) and seat spacer (9) or spring seat (11) against springs.

WARNING

Be sure the snapring is engaged properly before removing the compressor tool as injury can result from sudden release of parts.

d. Install 6796187 inner member compressor and slowly compress the springs (figure 3). Install snapring (13, figure 1) to retain spring seat on inner member. Remove compressor tool.

e. Insert internal retaining ring (8) in the inner member splines.

f. Install packing (7) on front end of inner member.

g. Place intermediate and inner member assembly in housing.

h. Install O−ring seal (4) on OD of outer member (3). Install outer member in the housing with O−marks on outer and intermediate spline aligned. Align anti−rotation slots in outer member and coupling housing (17).

i. Install ball (lock) (2) in recess formed by slots in housing and outer member. Install internal retaining ring (1) in housing to secure outer member.

19. SAFETY COUPLING ASSEMBLY − DECOUPLING TORQUE CHECK.

Support Equipment Required

Part No./Type Designation	Nomenclature
6797903	Fixture, torque check

Materials Required

Specification No./Part No.	Nomenclature
MIL−PRF−23699	Oil, lubricating
TT−T−291	Spirits, mineral

Lubricating Oil, MIL−PRF−23699 **2**

NOTE

Use MIL−PRF−23699 oil in the check fixture lubrication system.

The two oil holes in the safety coupling outer member shall be blocked during decoupling check.

a. Install safety coupling assembly in 679790 check fixture (figure 10) by bolting assembly to fixture coupling pilot.

CAUTION

Be sure quick release pins are removed from the drive arm and balance arm.

NOTE

It may be necessary to rotate the Formsprag clutch with the clutch locating handle to obtain proper alignment between the drive shaft splines and the safety coupling splines.

b. Engage fixture drive shaft splines with safety coupling splines and lock safety coupling pilot to pilot locater plate with fixture nuts and safety coupling nut.

c. The LH switch bracket detail −226 of the check fixture shall be checked for the appropriate setting, Pos 1 or Pos 2. This switch bracket adjusts check fixture torque cycle so it will be compatible with the helical spline angle of the coupling to be tested. Each safety coupling is identified by helical spline angle per paragraph 18, this WP. Couplings with a helical spline angle of 27° requires the LH switch bracket to be in Pos 1; Pos 2 setting is used to test a coupling with a 30° helical spline angle.

d. Push START button. Set lubrication system to 34 psig.

CAUTION

During the torque cycle, the safety coupling must decouple first and then re−engage during the torque cycle. If the safety coupling should re−engage first, then decouple during the torque cycle, push STOP button immediately after re−engagement and restart run.

e. Push RUN button and allow safety coupling to cycle through five decouplings to burnish the coupling teeth.

f. Check the safety coupling for oil flow.

g. After the fifth decoupling, start recording the next 28 consecutive decoupling readings in pound−feet. Reset gage peak load indicator arm after each reading.

h. After the 28th decoupling, push the OFF button after re−engagement and during the return cycle.

i. The safety coupling shall complete 28 consecutive decouplings within the negative torque limits of 500−600 lb ft. If decoupling readings are not within acceptable range, the following correction is recommended.

Paint Thinner TT−T−291 **8**

(1) Readings between 600−650 lb ft: Disassemble coupling, clean with mineral spirits reassemble and retest.

(2) Readings exceed 650 lb ft: Disassemble coupling and clean with mineral spirits. Relap parts per in paragraph 17, this WP. Reassemble coupling and repeat torque check per paragraphs 18 and 19, this WP.

(3) Readings less than 500 lb ft: Loosen the retaining nut. Without cycling, allow a steady stream of oil to come out the holes in the coupling. This allows some of the Molykote to be flushed through the coupling. Retighten the retaining nut and repeat decoupling torque check.

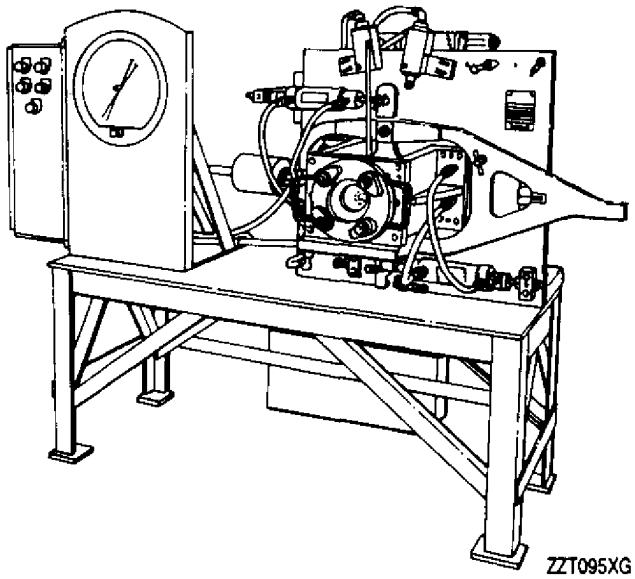

Figure 10. 6797903 Torque Check Fixture

j. Remove safety coupling assembly from the check fixture. (Use caution during removal to prevent damage to safety coupling assembly.)

k. After safety coupling decoupling torque check, disassemble and drain or wipe all residual oil from the coupling.

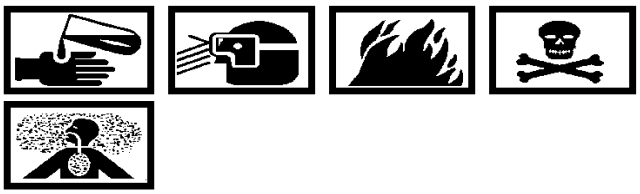

Lubricating Oil, MIL−PRF−23699 **2**

l. Reassemble safety coupling per paragraph 18 except use MIL−PRF−23699 oil in place of MIL−M−7866 molybdenum disulfide (Molykote).

m. Install the assembly on the torquemeter inner and outer shaft assembly and dynamic balance. Refer to WP 066 00.

DEPOT MAINTENANCE

DYNAMIC BALANCE

TORQUEMETER SHAFT AND COUPLING ASSEMBLY

Reference Material

None

Alphabetical Index

Subject **Page No.**

Introduction 2
Torquemeter Shaft and Coupling Assembly 2
Balancing 2
Preparation for Balancing 2

Record of Applicable Technical Directives

None

1. **INTRODUCTION.**

2. This work package (WP) contains the procedures for dynamic balance of the torquemeter shaft and coupling assembly used on the T56−A−427 turboprop engine.

3. **TORQUEMETER SHAFT AND COUPLING, ASSEMBLY.**

4. TORQUEMETER SHAFT AND COUPLING ASSEMBLY − PREPARATION FOR BALANCING.

Support Equipment Required

Part No./Type Designation	Nomenclature
——	Wrench, torque (200−1000 lb in.)

a. Check fit (Ref 1, figure 1) between inside diameter (ID) of inner torquemeter shaft and outside diameter (OD) of coupling outer member.

b. Align O−marks as nearly as is permitted by bolt holes.

c. Install coupling to torquemeter inner shaft using four bolts, without tablock washers, equally spaced.

d. Torque bolts to 300−350 lb in. (QA)

5. TORQUEMETER SHAFT AND COUPLING ASSEMBLY − BALANCING. (figure 8)

Support Equipment Required

Part No./Type Designation	Nomenclature
6797775	Adapter, dynamic balance, front, torquemeter shaft and Coupling Assembly
6797776	Adapter, dynamic balance, rear, torquemeter shaft and coupling assembly
6797777	Half bearing, front and rear (2)
6797780	Pulley, balance drive (Norfolk)
6797781	Belt, balance drive (Norfolk)
6797782	Pulley, balance drive (Alameda)
6797783	Belt, balance drive (Alameda)
6798183	Machine, horizontal rotating balance

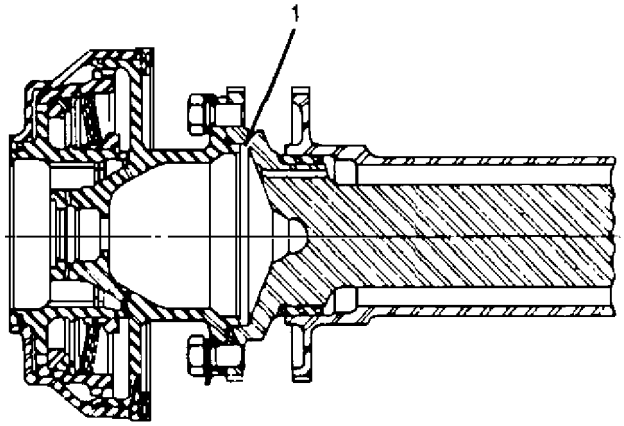

Ref. No.	Description	Minimum	Maximum
1	Inner shaft−Outer member	0.0000	0.0015L

Figure 1. Inner Torquemeter Shaft and Outer Member Coupling Fit Limits

Materials Required

Specification No./Part No.	Nomenclature
MIL−PRF−3043	Resin Coating

a. Install torquemeter shaft and coupling assembly in 6798183 balance machine using 679775 front and 6797776 rear adapters (figures 2 and 3), 6797777 half bearings (figure 4), 6797780 or 6797782 pulley (figure 5 or 6) and 6797781 or 6797783 belt (figure 7).

b. Balance at 500 − 800 rpm within 0.10 oz in. in each plane of correction (figure 8). (QA)

Resin Coating Thinner MIL−PRF−3043 39

c. Where stock is removed during balancing, touch up areas with MIL−PRF−3043 resin coating and air dry.

d. Identity the balanced assembly (figure 8). Use manual vibro peen shallow impression method, impression depth shall not exceed 0.004 in.

e. Place balanced assembly in protective container.

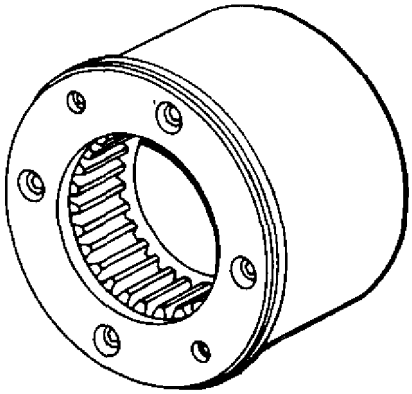

ZZT592XJ

Figure 2. 6797775 Torquemeter Shaft and Coupling Assembly Front Dynamic Balance Adapter

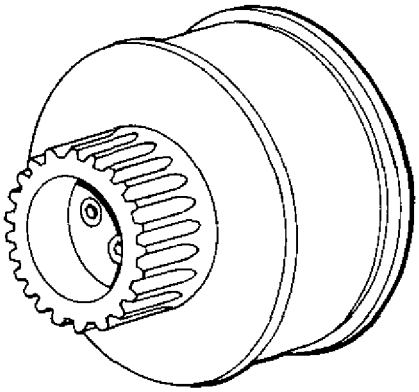

ZZT337XHJ

Figure 3. 6797776 Torquemeter Shaft and Coupling Assembly Rear Dynamic Balance Adapter

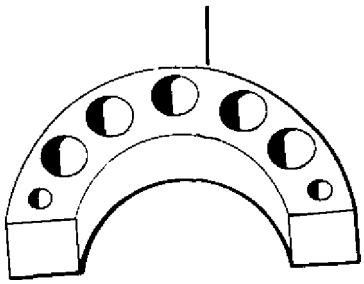

ZZT593XJ

Figure 4. 6797777 Front and Rear Half Bearing

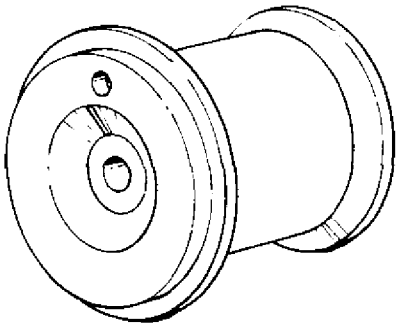

ZZT336XHJ

Figure 5. No. 6797780 Balance Drive Pulley (Norfolk)

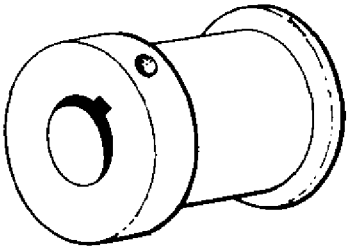

ZZT594XJ

Figure 6. 6797782 Balance Drive Pulley (Alameda)

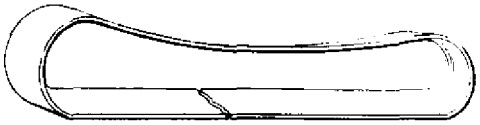

ZZT351XJ

Figure 7. 6797781 (Norfolk) and 6797783 (Alameda) Balance Drive Belt

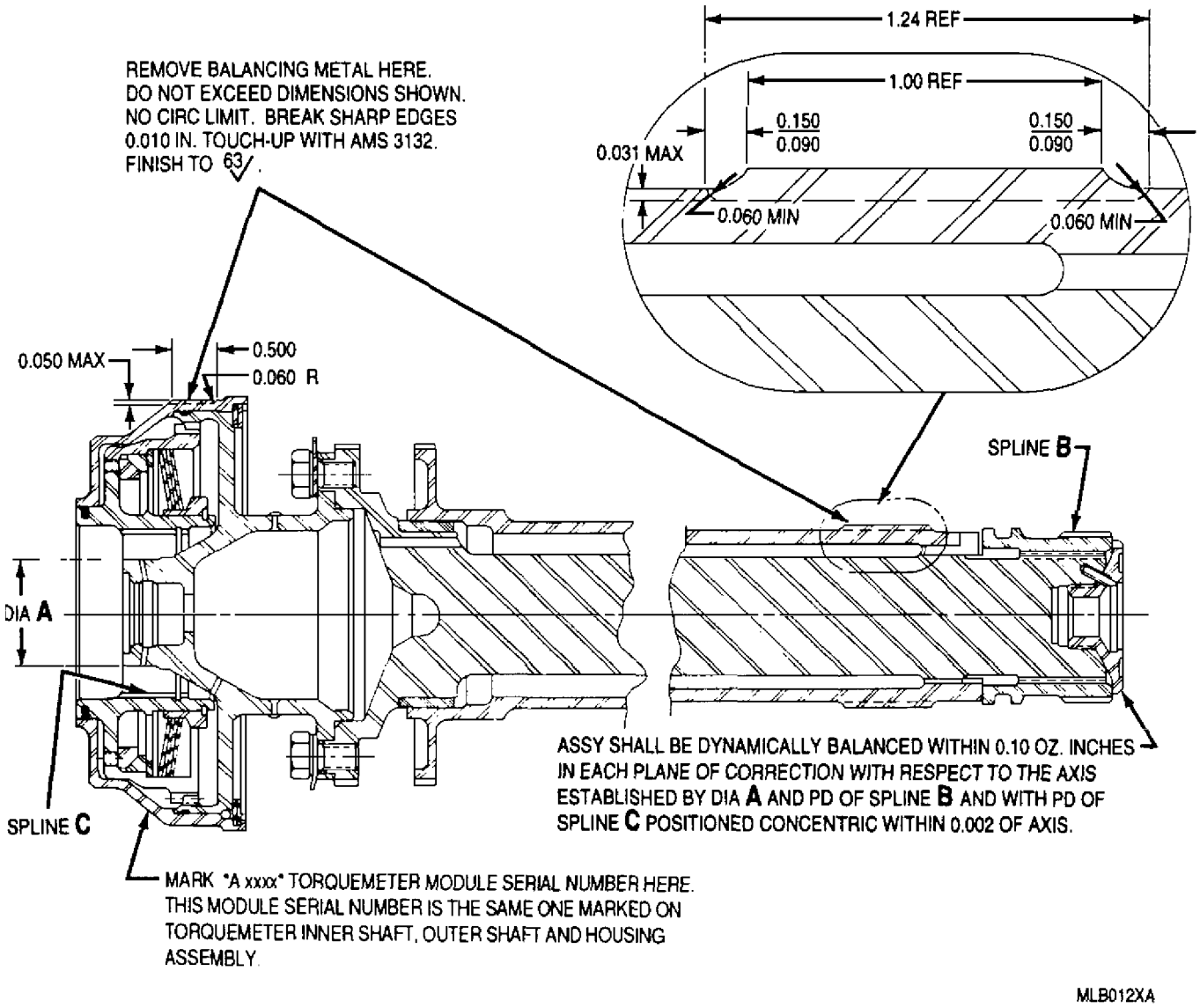

Figure 8. Torquemeter Shaft and Coupling Assembly − Dynamic Balance

DEPOT MAINTENANCE

INSPECTION AND REPAIR

ACCESSORY DRIVE HOUSING ASSEMBLY

Reference Material

Magnetic Particle and Fluorescent Penetrant Inspection − Procedures . . . . . WP 017 00
Plating and Surface Treatment of Parts . . . . . WP 018 00
Helical Compression Springs − Testing . . . . . WP 140 00

Alphabetical Index

Subject **Page No.**

Accessory Drive Housing Assembly 2
External Oil Scavenge Pump Mounting Surface and Bore Repair 4
External Scavenge Oil Tube Union Thread Repair (P/N 23008237 Housing Only) 6
Filter Bypass Valve Installation and Testing 9
Fuel Pump Mounting Pad Repair 9
Inspection 2
Lockwire Holes, Mounting Pad, and Mounting Stud Hole Bosses 4
Mounting Stud Holes Bosses Repair (Alternate Procedure) 4
Repair 2
Speed Sensitive Valve Mounting Pad Repair 6
Introduction 2

Record of Applicable Technical Directives

None

1. **INTRODUCTION.**

2. This work package (WP) provides instructions for inspection and repair of the accessory drive housing assembly used on the T56−A−427 turboprop engine.

3. **ACCESSORY DRIVE HOUSING ASSEMBLY.**

4. ACCESSORY DRIVE HOUSING ASSEMBLY − INSPECTION.

a. Inspect accessory drive housing assembly. Refer to table 1.

b. Refer to WP 017 00 for Fluorescent Penetrant Inspection (FPI) procedures.

5. ACCESSORY DRIVE HOUSING ASSEMBLY − REPAIR.

Materials Required

Specification No./Part No.	Nomenclature
AMS 3132	Coating, resin
Sprabronze AA	Finish, metallizing

a. Repair accessory drive housing assembly. Refer to Disposition column, table 1.

b. Replace parts not within serviceable limits after repair.

Table 1. Accessory Drive Housing Assembly − Inspection and Repair

Condition	Serviceable Limits	Repairable Limits	Disposition
Cracks emanating from bolt holes on the OD rim.	Not serviceable.	Not repairable.	Condemn part exceeding serviceable limits.
FPI indications:			
Indications which are-chain porosity, determined by blending.	0.015 in. max depth.	Not repairable.	Condemn part having line type indications emanating from porosity, thus indicating a fatigue type condition.
Crack indications in the radius of pockets in the ID of the case or cover.	1/16 in. max depth.	No repair except blending.	Condemn part when crack indications are not removed by blending to 1/16 in. max depth. Cracks which bleed back after erasing are not acceptable.
Crack indications at intersection of scavenge oil passage OD and mounting bolt hole OD.	Acceptable provided leakage is not indicated by a 50 psi pressure check of the scavenge oil passage.	Not repairable.	Condemn part when leakage exists.
Broken lockwire holes, damaged mounting pads or stud hole bosses.	Not serviceable.	Any break or damage.	Repair per paragraphs 6 and 7, this WP.
External scavenge oil pump mounting Surface A not flat (figure 1).	0.005 in. FIR.	Pad face over 3.525 in. from front face.	Remove studs and lap face per paragraph 8, this WP. Pad must be 3.525 − 3.545 in. from front face.
Thread damage at external scavenge oil tube union.	Not serviceable.	Exceeds serviceable limits.	Repair per paragraph 9, this WP.

Table 1. Accessory Drive Housing Assembly − Inspection and Repair (contd)

Condition	Serviceable Limits	Repairable Limits	Disposition
External scavenge oil pump 1.498 − 1.500 in. bore out of round.	0.003 in. FIR out of round.	Exceeds serviceable limits.	Round up the bore by machining. Do not exceed 1.505 in. Install replacement bushing per paragraph 8, this WP.
Damaged or corroded machined splitline surfaces.	Not serviceable.	0.015 in. max depth.	Machine (phonograph) damaged surface. Do not exceed 0.015 in. in depth. Metallize with Sprabronze AA and machine to print limits.
Improper housing chamfer at scavenge oil pump mounting pad bore (1.498 − 1.500 in. diameter).	Chamfer of 0.090 in. by 30°. Bore diameter must not be less than 1.496 in. or greater than 1.502 in.	Exceeds serviceable limits.	Machine a chamfer in the 1.498 − 1.500 in. diameter to 0.090 in. by 30°. If ID is less than 1.496 in., machine to 1.498 − 1.500 in. If ID is greater than 1.502 in., metal spray or sleeve to restore bore to 1.498 − 1.500 in.
Corroded or damaged mounting pads.	Not serviceable.	0.060 in. max depth.	Grind or mill corrosion. Rework area shall not exceed 25% of the circumference or 25% of the axial width. Coat the reworked bore and outer face of the pad with AMS 3132 resin coating per WP 018 00. When these rework limits are exceeded, repair the fuel pump or speed sensing switch mounting pad with an aluminum or magnesium bushing per paragraph 10 or 11, this WP. After pad repair, apply AMS 3132 resin coating per WP 018 00 to the entire bore.
Wear or spalling on filter bypass valve ball.	Not serviceable.	Not repairable.	Replace filter bypass ball. Refer to paragraph 12, this WP.
Nicks or dents in the ball seat of the filter bypass valve in the cover.	Not serviceable.	Not repairable.	Replace filter bypass valve seat in cover assembly. Refer to paragraph 12, this WP.
Spring (6784708) tension of filter bypass valve.	Refer to WP 140 00.	Not repairable.	Condemn spring exceeding serviceable limits.
Damaged Accessory Drive Housing and Cover			Perform necessary inspection and repair on housing and cover. Touch up protective coating with dichromate per AMS 2475.

6. ACCESSORY DRIVE HOUSING ASSEMBLY − LOCKWIRE HOLES, MOUNTING PAD, AND MOUNTING STUD HOLES BOSSES REPAIR.

Materials Required

Specification No./Part No.	Nomenclature
AWS A5.19	Rod, welding

a. Repair broken lockwire hole bosses by weld buildup and reforming to original configuration, using AWS A5.19 welding rod.

b. Remove studs from damaged mounting pads. Using AWS A5.19 welding rod, apply sufficient puddle weld to establish original configuration after machining. Install new studs.

c. Using AWS A5.19 welding rod, repair damaged mounting stud hole bosses by puddle welding and machining to original configuration.

WARNING

Heated parts will cause skin damage (burns). Use clean insulated gloves to handle parts.

d. After weld repair, stress relieve the housing at 400°F (204°C) for one hour and air cool.

e. Fluorescent penetrant inspect the welded areas.

f. Touch−up protective coating with dichromate per AMS 2475.

7. ACCESSORY DRIVE HOUSING ASSEMBLY − MOUNTING STUD HOLES BOSSES REPAIR. (ALTERNATE PROCEDURE.)

Materials Required

Specification No./Part No.	Nomenclature
MIL−S−22473	Compound, sealing
1/16 in. dia x 1/4 in. long	Pin, brass

a. Drill and tap housing for the following externally threaded brass bushing:

Bushing size OD THREAD: 7/16−20 UNF−3A

ID THREAD: 5/16−18 NS

LENGTH: 3/4 in.

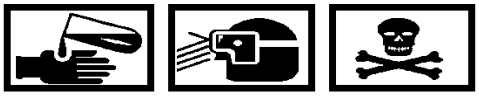

Loctite No. 79 MIL−S−22473 Grade AA 50

b. Apply MIL−S−22473 sealing compound to bushing. Install bushing. (do not tighten)

c. Using a No. 52 drill, drill a hole, on bolt circle centerline, for a 1/16 in. dia. x 1/4 in. long brass pin.

d. Apply MIL−S−22473 sealing compound to brass pin. Install and stake pin.

e. Cut off bushing and pin flush with mounting face.

f. Install stud.

8. ACCESSORY DRIVE HOUSING ASSEMBLY − EXTERNAL OIL SCAVENGE PUMP MOUNTING SURFACE AND BORE REPAIR.

Materials Required

Specification No./Part No.	Nomenclature
——	Permatex 1372
——	Magnesium
——	Aluminum

a. Fabricate a bushing from magnesium or aluminum per Detail A, figure 1.

b. Machine the bore per figure 1. The ID of the bore shall be such that when the bushing is installed there is a 0.002 − 0.003 in. tight fit between bushing and housing.

c. Apply a thin coating of Permatex 1372 to the bore. Chill the bushing and install in housing.

d. Machine bushing per figure 1.

e. Pin the bushing as shown. The pin must be flush or below the surface.

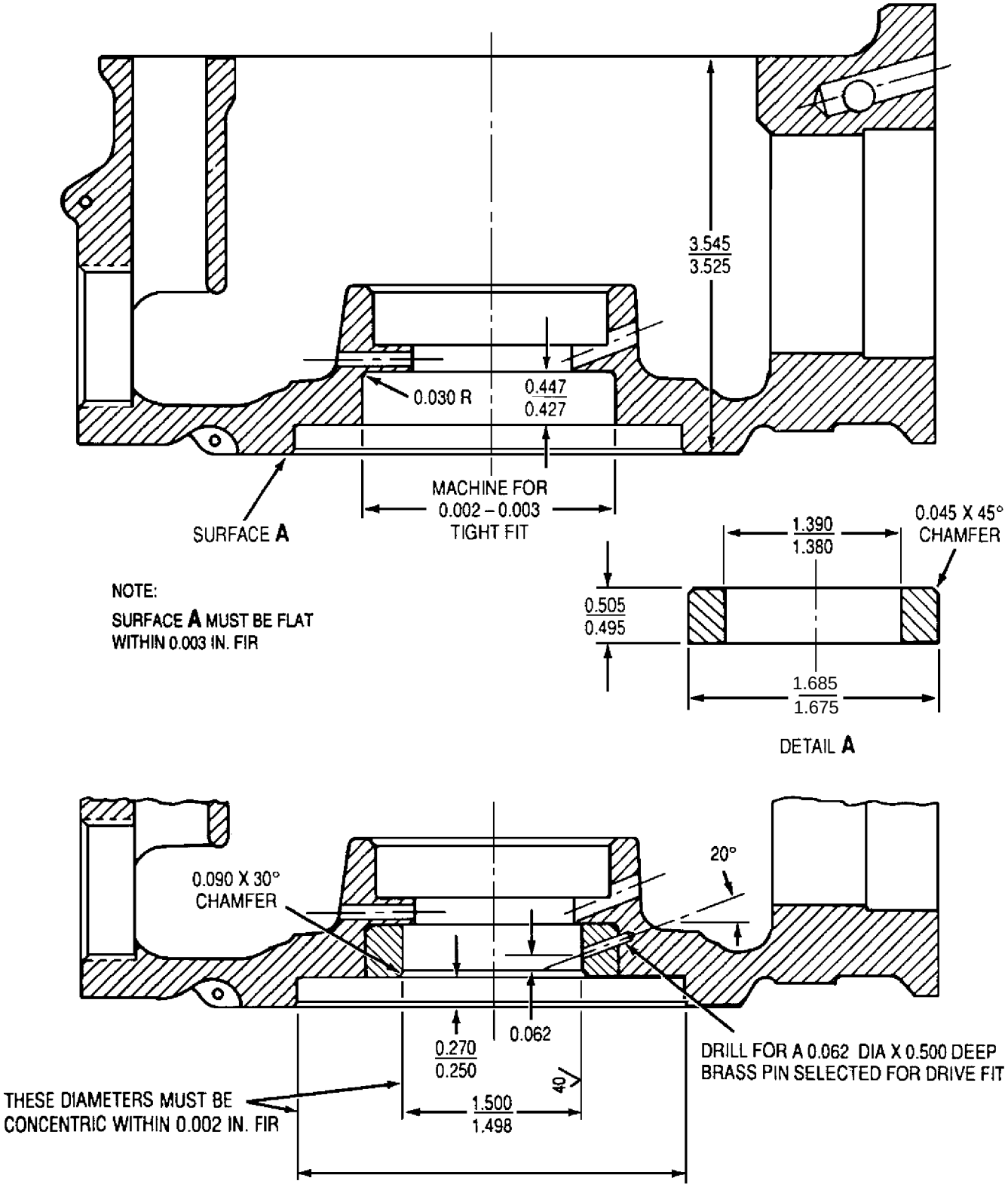

Figure 1. External Scavenge Oil Pump Mounting Surface and Bore Repair

9. ACCESSORY DRIVE HOUSING ASSEMBLY − EXTERNAL SCAVENGE OIL TUBE UNION THREAD REPAIR. (P/N 23008237 HOUSING ONLY.)

Materials Required

Specification No./Part No.	Nomenclature
MIL−PRF−680, Type II	Solvent, dry cleaning
AMS 2475	Dichromate

a. Clean standard size threads with 0.5625−18UNJF−3A tap. Check fit with insertion of long reach union, P/N 501145.

(1) If threads do not hold or accept a long reach union, then rework external scavenge oil tube union threads in accordance with paragraph 9.b.

(2) If threads do hold or accept a long reach union but the long reach union does not fully seat, then use 0.5625−18UNJF−3A tap to cut minimum amount of threads to allow union to fully seat. Thoroughly clean the housing and flush out reworked oil passage with MIL−PRF−680, type II dry cleaning fluid and dry with compressed air. Coat the newly tapped threads with AMS 2475 Dichromate. Install long reach union and torque to 100−150 lb in. (QA).

(3) If threads do hold or accept a long reach union and the long reach union does fully seat, then install long reach union and torque to 100−150 lb in. (QA). Continue processing.

NOTE

To prevent metal chips from becoming trapped in the accessory drive housing assembly, it must be completely disassembled for rework.

b. Disassemble the accessory drive housing assembly.

c. Rework external scavenge oil tube union threads as follows (figure 2).

NOTE

Rework shall be square with axis of thread PD within 0.004 in. FIR, concentric with thread PD within 0.005 in. FIR, and free from longitudinal and spiral tool marks.

(1) Remove existing threads by drilling 0.5709 − 0.5788 in. dia 0.690 − 0.710 in. deep.

(2) Counterbore 0.643 − 0.648 in. dia 0.094 − 0.109 in. deep.

(3) Countersink 120° to a 0.750 − 0.765 in. dia.

(4) Tap to a 0.6100 − 0.630 in. depth with a 0.6250 − 18UNF3B bottom tap.

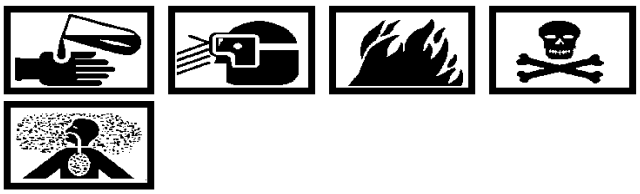

Dry Cleaning Solvent MIL−PRF−680, Type II **3**

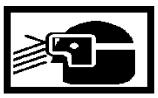

Compressed Air **56**

(5) Thoroughly clean the housing and flush out reworked oil passage with MIL−PRF−680, type II dry cleaning fluid and dry with compressed air.

(6) Coat the newly machined and threaded areas with AMS 2475 Dichromate.

(7) Reidentify the accessory drive housing as 23053750 by manual vibropeen shallow method, 0.001 − 0.006 in. deep max.

(8) Install union P/N 6897168 and torque to 150−200 lb in. (QA).

10. ACCESSORY DRIVE HOUSING ASSEMBLY − SPEED SENSITIVE VALVE MOUNTING PAD REPAIR.

Materials Required

Specification No./Part No.	Nomenclature
——	Permatex 1372
——	Magnesium
——	Aluminum

a. Fabricate a bushing from magnesium or aluminum per figure 3, step 1.

b. Machine the bore per step 2. The ID of the bore shall be such that when the bushing is installed there is a 0.002−0.003 in. tight fit between the bushing and cover. The ID shall be concentric with Diameter A within 0.002 in. FIR. Diameter A may be either the bearing cage bore or the cage bearing bore.

NOTE

There may be a breakout into the oil drain hole, but this is permissible.

c. Apply a thin coating of Permatex 1372 to the bore. Chill the bushing and install in the cover.

d. Machine the bushing per step 3. Machine the bushing flush to 0.001 in. below the pad face. Use a 0.125 in. diameter drill to insure that the oil drain holes are not restricted.

e. Pin the bushing per step 4. The pin must be flush or below the surface.

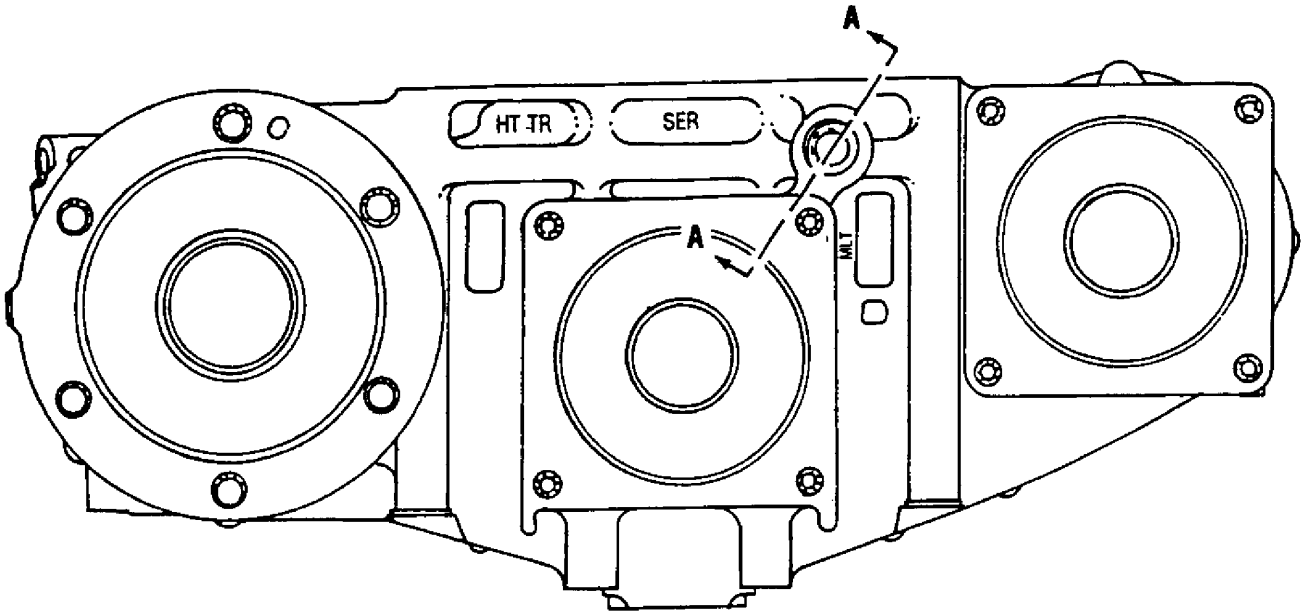

REAR VIEW

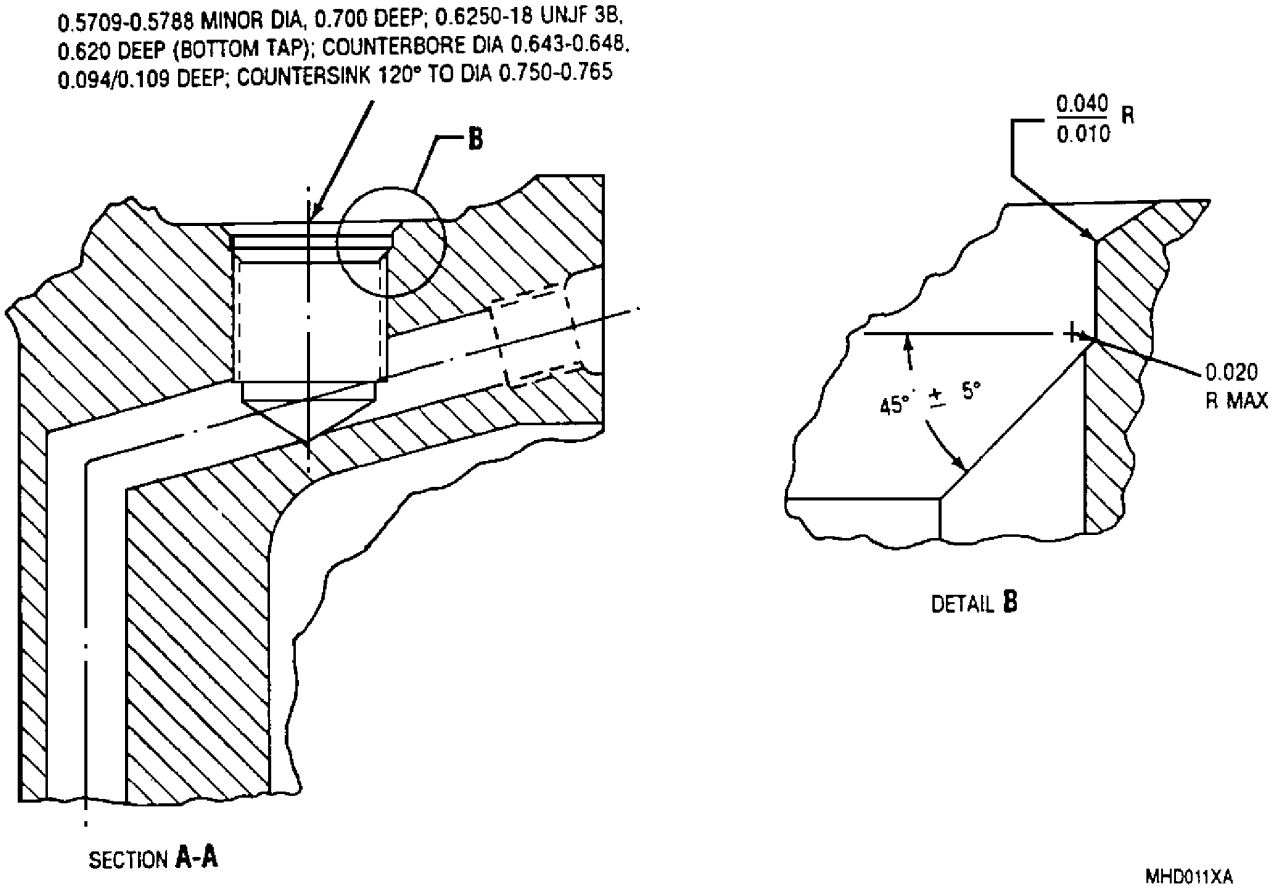

Figure 2. Accessory Drive Housing External Scavenge Oil Tube Union Thread Repair

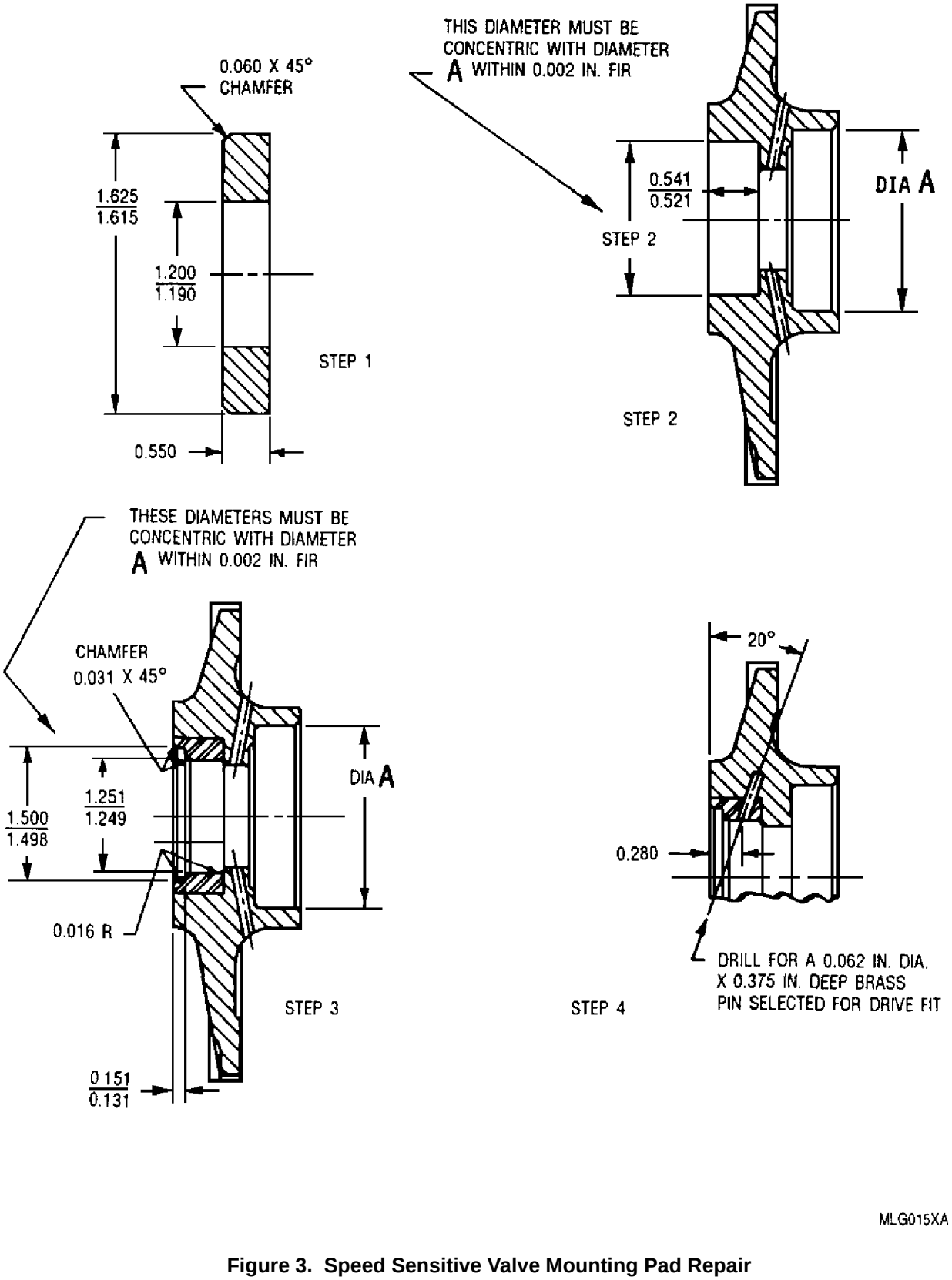

Figure 3. Speed Sensitive Valve Mounting Pad Repair

11. ACCESSORY DRIVE HOUSING ASSEMBLY − FUEL PUMP MOUNTING PAD REPAIR.

Materials Required

Specification No./Part No.	Nomenclature
MS9486−03	Pin
——	Permatex 1372
——	Magnesium
——	Aluminum

a. Fabricate a bushing from magnesium or aluminum per Detail A, figure 4.

b. Machine bore per figure 4. The bushing must have a 0.0005 − 0.0015 in. press fit and be centrally located with reference to the finish bushing ID within 0.003 in. FIR. The bushing ID must be concentric with Diameter P within 0.002 in. FIR.

NOTE

There may be a breakout into the oil drain hole, but this is permissible.

c. Apply a thin coating of Permatex 1372 to the bore. Chill the bushing and install in cover.

d. Machine bushing per figure 4. Machine bushing flush to 0.001 in. below pad face. Use a 0.125 in. diameter drill to insure that the oil drain holes are not restricted. Use a 0.178 − 0.198 in. diameter drill on one hole only.

e. Pin bushing per figure 4. Select a pin for drive fit. Pin must be flush or below surface. Stake metal over slightly.

12. ACCESSORY DRIVE HOUSING ASSEMBLY − FILTER BYPASS VALVE INSTALLATION AND TESTING.

Support Equipment Required

Part No./Type Designation	Nomenclature
6799866	Stand, test, fuel accessories
——	Wrench, torque (0−50 lb in.)

Materials Required

Specification No./Part No.	Nomenclature
MIL−C−7024	Fluid, calibrating

a. Install seat (1, figure 5), ball (2), spring (3), gasket (4) and body (5) in cover (7).

b. Install screw (6). Torque screws to 22−26 lb in. and lockwire. (QA)

c. Check for leakage as follows:

(1) Install assembly on 6799866 test stand (figure 6) and plug the filter cavity oil in passage.

(2) Attach fixtures to the cover so that the oil filter is up and tilted.

(3) Attach test hose and apply MIL−C−7024 calibrating fluid at 70 − 90°F (21 − 32°C) to the pressure oil passage on the oil pump mounting pad at 10 psi.

(4) Leakage past the bypass valve must not exceed 6 cc per hour. Duration of test shall be at least five minutes.

NOTE

Do not disassemble the valve after pressure check is acceptable.

d. Tag the cover, indicating valve pressure check requirement has been met.

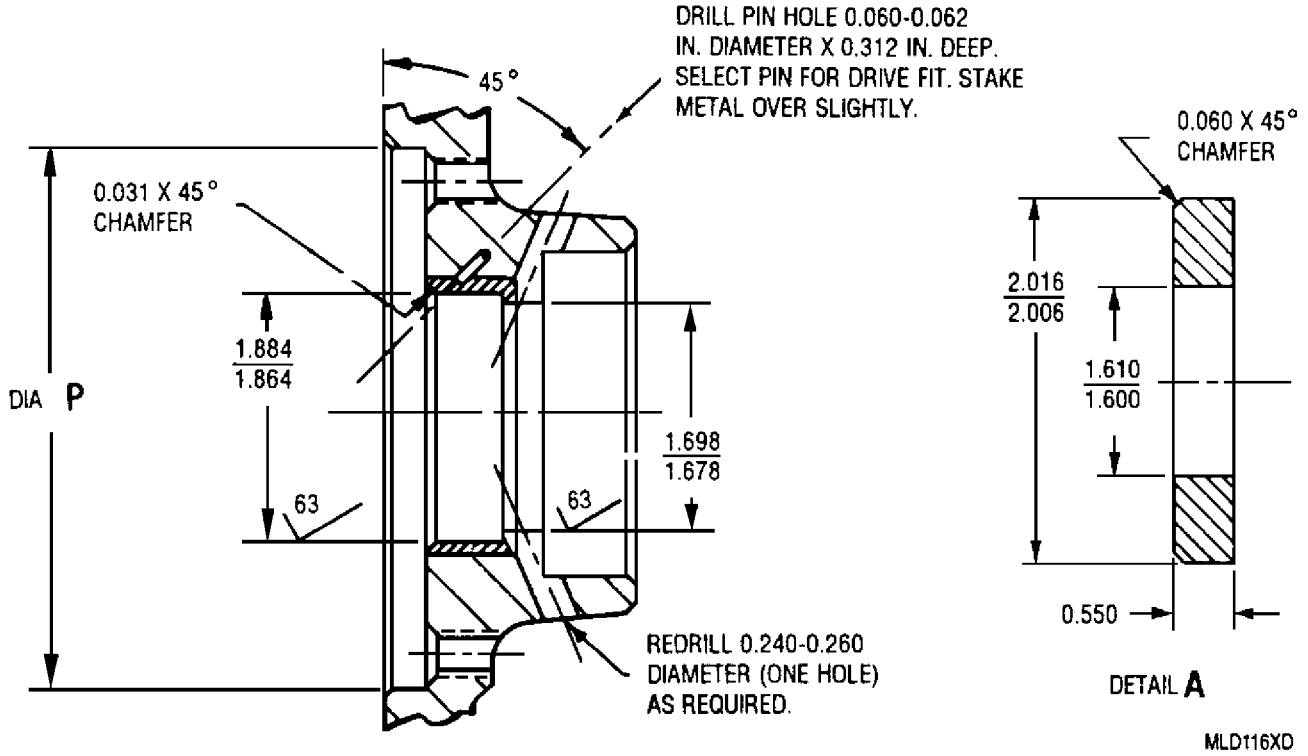

Figure 4. Fuel Pump Mounting Pad Bushing Repair

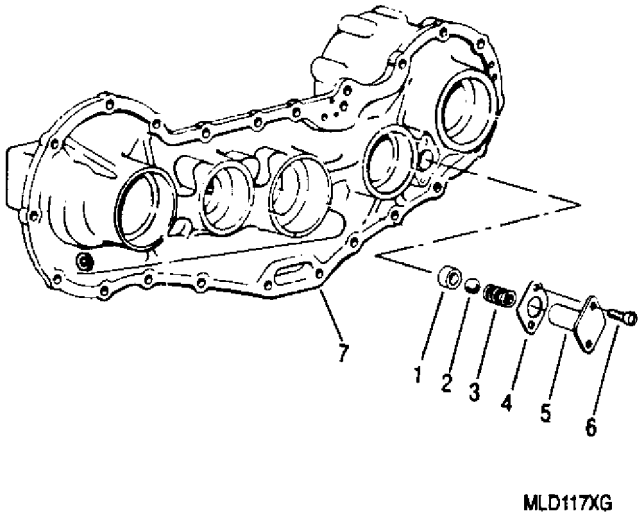

Figure 5. Filter Bypass Valve Installation Details

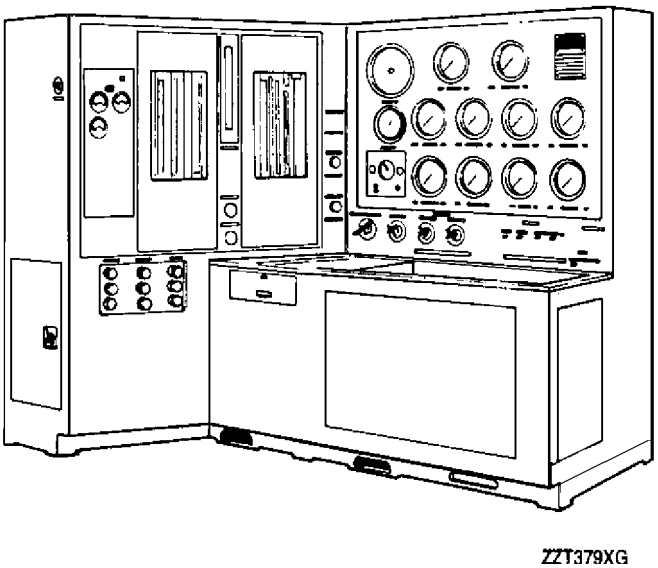

Figure 6. Fuel Accessories Test Stand 6799866

DEPOT MAINTENANCE

INSPECTION, REWORK, REPAIR, AND TESTING

AIR INLET HOUSING ASSEMBLY

Reference Material

Bearing Cages − General Inspection, Repair, and Replacement . . . . . WP 011 00
Magnetic Particle and Fluorescent Penetrant Inspection − Procedures . . . . . WP 017 00
Plating and Surface Treatment of Parts . . . . . WP 018 00
Compressor Extension Shaft and Housing − Inspection and Repair . . . . . WP 077 00

Alphabetical Index

Subject **Page No.**

Air Inlet Housing Assembly 2
Anti−icing Air Passages Rework 19
Anti−icing Valve Mounting Pad Repair 7
Anti−icing Valve Mounting Pad Rework 20
Crack Repair 16
Inlet Vane O−ring Seal Groove Repair 18
Inspection 2
Metallizing of Extension Shaft Housing Bore 11
Mounting Pad Bores Repair 18
Pilot Lip or Ring Replacement 8
Pressure Test 23
Repair 2
Rework 19
Temperature Probe Assembly Pad Bore Rework 19
Strut Corrosion Repair 17
Strut Repair (Excluding Corrosion Damage) 17
Surface Refinishing 20
Introduction 2

Record of Applicable Technical Directives

None

1. **INTRODUCTION.**

2. This work package (WP) provides the instructions for the inspection, rework, repair, and testing of the compressor air inlet housing assembly used on the T56−A−427 turboprop engine.

3. **AIR INLET HOUSING ASSEMBLY.**

4. AIR INLET HOUSING ASSEMBLY − INSPECTION.

Support Equipment Required

Part No./Type Designation	Nomenclature
23034352	Gage, pilot sleeve bore ID checking
23034353	Master, pilot ID checking gage
23034354	Master, pilot OD checking gage
23034355	Gage, pilot OD checking
6799595	Fixture, concentricity checking
6799647	Adapter, checking

CAUTION

When inspecting metallized housings with fluorescent penetrant materials, do not use wet developing solutions, ZP−4 dry developer must be used for this inspection.

a. Fluorescent penetrant inspect (FPI) air inlet housing per WP 017 00.

b. Inspect air inlet housing. Refer to table 1.

5. AIR INLET HOUSING ASSEMBLY − REPAIR.

Support Equipment Required

Part No./Type Designation	Nomenclature
6798844	Puller, compressor front bearing cage
6799573	Gage, shim measurement
6872235	Puller, cage, side gear bearing

Materials Required

Specification No./Part No.	Nomenclature
AMS 4130	Stock, steel
AMS 3135	Sealer, resin
AN932−M3	Plugs

a. Repair air inlet housings that fail inspection. Refer to Disposition column, table 1.

b. Replace air inlet housings not within serviceable limits after repair.

Table 1. Air Inlet Housing − Inspection and Repair

Condition	Serviceable Limits	Repairable Limits	Disposition
Cracks:			
Housing.	Not serviceable.	Any crack.	Refer to paragraph 9, this WP. Replace housing if cracked in any way that would prevent or impair weld repair.
Indications at anti−icing valve mounting pad.	Cracks around 0.562 in. anti−icing holes inside housing are acceptable providing they do not progress into bushing holes or temperature feed hole.	Exceeds serviceable limits.	Repair per figure 1 and paragraph 6, this WP.

Table 1. Air Inlet Housing − Inspection and Repair (contd)

Condition	Serviceable Limits	Repairable Limits	Disposition
Nicks, dents and scratches:			
Strut trailing edge and 1.0 in. forward of trailing edge.	Not serviceable.	Any nicks, dents or scratches.	Blend damage to a smooth contour. Damage of 1/4 in. max depth after blending is acceptable. Refer to paragraph 10, this WP, for repair of damage not acceptable after blending.
All remaining housing areas.	Not serviceable.	Any nicks, dents or scratches.	Blend, a maximum of 1/8 in. depth, to a smooth surface. Keep material removed to a minimum. Damage or rework within 1/4 in. of an oil or an air passage requires that passage be pressure checked per paragraph 19, this WP.
Wear:			
Forward face breaking both edges.	0.020 in. max depth.	Exceeds serviceable limits.	Machine entire face to remove wear, providing housing axial dimension is not less than 7.704 in. min.
Loose front bearing cage.	Not serviceable.	Any amount of looseness, as determined by sound when tapping gently with a plastic hammer.	Drill cage pins and position 6798844 puller (figure 2) in these drilled holes. Use slide hammer feature of puller to remove cage. Damaged housing cage bore shall be machined for an oversize cage or repaired by metallizing and machining to 4.440 − 4.438 in. Metal coating thickness after machining must not exceed 0.042 in. Refer to WP 011 00 for bearing cage installation.
Rear bearing cage ID.	Average ID (four measurements 45° apart) of 4.3382 in.	Exceeds serviceable limits.	Drill cage pins and position 6872235 puller (figure 3) in these drilled holes. Use slide hammer feature of puller to remove cage. Refer to WP 011 00 for bearing cage installation.

Table 1. Air Inlet Housing − Inspection and Repair (contd)

Condition	Serviceable Limits	Repairable Limits	Disposition
Wear: (contd)			
Loose or damaged side gear bearing cage.	Not serviceable.	Any looseness or damage.	Remove three cage retaining pins. Insert 6872235 puller (figure 4) inside cage and tighten bolt until tool expander detail is tight under cage. Remove cage by pushing against puller tool through accessory drive mounting pad. If cage bore is worn oversize, machine housing to true and remove wear not to exceed 0.030 in. over maximum diameter limit of 1.8519 in. Chrome plate cage OD per WP 018 00, not to exceed 0.015 in. thick after finish grind. Install cage per WP 011 00. As an alternate method to plating (if bearing cage goes out of round from plating), it is recommended that a steel sleeve of AMS 4130 be manufactured to fit between bearing cage and compressor inlet housing side gear bearing cage bore. a. Bore compressor inlet housing sidegear bearing cage bore 0.080−0.100 in. oversize. b. Manufacture a sleeve of AMS 4130 steel to maintain a 0.000 − 0.001 in. tight fit on OD of side gear bearing cage. Length of sleeve is 1.062 − 1.072 in. and wall thickness is 0.040 − 0.050 in. c. Install sleeve onto OD of side gear bearing cage. Cage should extend approximately 1/16 in. through sleeve.

Table 1. Air Inlet Housing − Inspection and Repair (contd)

Condition	Serviceable Limits	Repairable Limits	Disposition
Wear: (contd)			
Loose or damaged sidegear bearing cage.	Not serviceable.	Any looseness or damage.	d. Machine sleeve OD concentric to cage ID within 0.0002 in. FIR and to obtain a 0.0005 − 0.0010 in. tight fit inside gear bearing cage bore.
			e. Install cage/sleeve assembly into cage bore per WP 011 00.
Rear pilot OD.	Minimum OD of 15.580 in. Use 23034355 gage (figure 4) and 23034354 gage master (figure 5).	See figure 6.	Replace rear pilot ring per figure 6 and paragraph 7, this WP.
Rear pilot ID.	Average of four measurements 45° apart less than 15.312 in. Use 23034352 gage (figure 7) and 23034353 gage master (figure 8).	Average ID is greater than 15.312 in.	Replace rear pilot ring per figure 6 and paragraph 7, this WP.
Extension shaft housing bore front ID, Diameter A (figure 9).	No scoring, fretting, and average ID cannot exceed 5.565 in.	Exceeds serviceable limits.	Repair per figure 9 and paragraph 8, this WP.
Concentricity of bearing cage ID to extension shaft housing bore.	Within 0.003 in.	Exceeds 0.003 in.	Replace bearing cage or repair housing bore per figure 9 and paragraph 8, this WP.
Concentricity of rear pilot lip OD to extension shaft housing bore. Mount housing in 6799595 fixture and 6799647 adapter (figures 10 and 11).	Within 0.002 in.	Exceeds 0.002 in.	Replace rear pilot ring per figure 6 and paragraph 7, this WP.
Anti−icing valve mounting pad bushing damage.	Not serviceable.	Any damage.	Replace bushing per figure 1 and paragraph 6, this WP.
Corrosion:			
Struts.	0.100 in. max depth.	Exceeds serviceable limits.	Rework per paragraph 11, this WP.
Temperature probe assembly pad bore.	No damage permitted.	Any damage in 1.469 in. ID area for O−ring seal.	Rework per paragraph 15, this WP.

Table 1. Air Inlet Housing − Inspection and Repair (contd)

Condition	Serviceable Limits	Repairable Limits	Disposition
Corrosion: (contd)			
Anti−icing valve mounting pad.	0.250 in. min wall thickness in areas not covered by gasket. One−half gasket thickness in area covered by gasket.	Exceeds serviceable limits.	Rework per paragraph 17, this WP.
Rear flange adjacent to threaded insert.	Less than 1/8 in. of insert length and less than 1/4 of the insert circumference is exposed.	Not repairable.	Condemn housings exceeding serviceable limits.
Rear flange.	Max diameter of 3/4 in. and depth does not exceed 0.100 in. after blending.	Not repairable.	Condemn housings exceeding serviceable limits.
Adjacent to air passages.	Maximum depth of 0.100 in. after blending.	Not repairable.	Condemn housings exceeding serviceable limits.
Outside surface adjacent to threaded inserts and studs.	Up to 0.187 in. radially from stud or insert bore (360°) providing that not more than two threads are exposed on circumference of studs or inserts.	Not repairable.	Condemn housings exceeding serviceable limits.
Bottom of mounting pad bores.	Maximum depth of 0.100 in. after blending.	Corrosion depth exceeds 0.100 in.	If serviceable, apply a coating of AMS 3135 resin to blended areas per WP 018 00. If corrosion exceeds 0.100 in. in depth, repair per paragraph 13, this WP.
Compressor air inlet vane O−ring seal groove.	Minor pitting.	Exceeds serviceable limits.	Repair per figure 13 and paragraph 12, this WP.
Pressure test:			
Air and oil passages per paragraph 19, this WP.	No leakage permitted.	All accessible areas.	Weld repair per paragraph 10, this WP.
Anti−icing air passages per paragraph 19, this WP.	Leakage into sump not permitted.	If leakage is outward through strut wall and hole does not exceed 1/8 square in. for each side of strut.	Condemn housing if leaking into sump. Repair housing per paragraph 17, this WP.
Damage to inlet housing paint coating.	Not serviceable.	Any damage.	Spot or re−spray per paragraph 18, this WP.
After all rework to air inlet housing, check measurement with 6799573 gage (figure 14) and mark dimension per WP 077 00. This dimension is used to determine side gear shim requirements.			

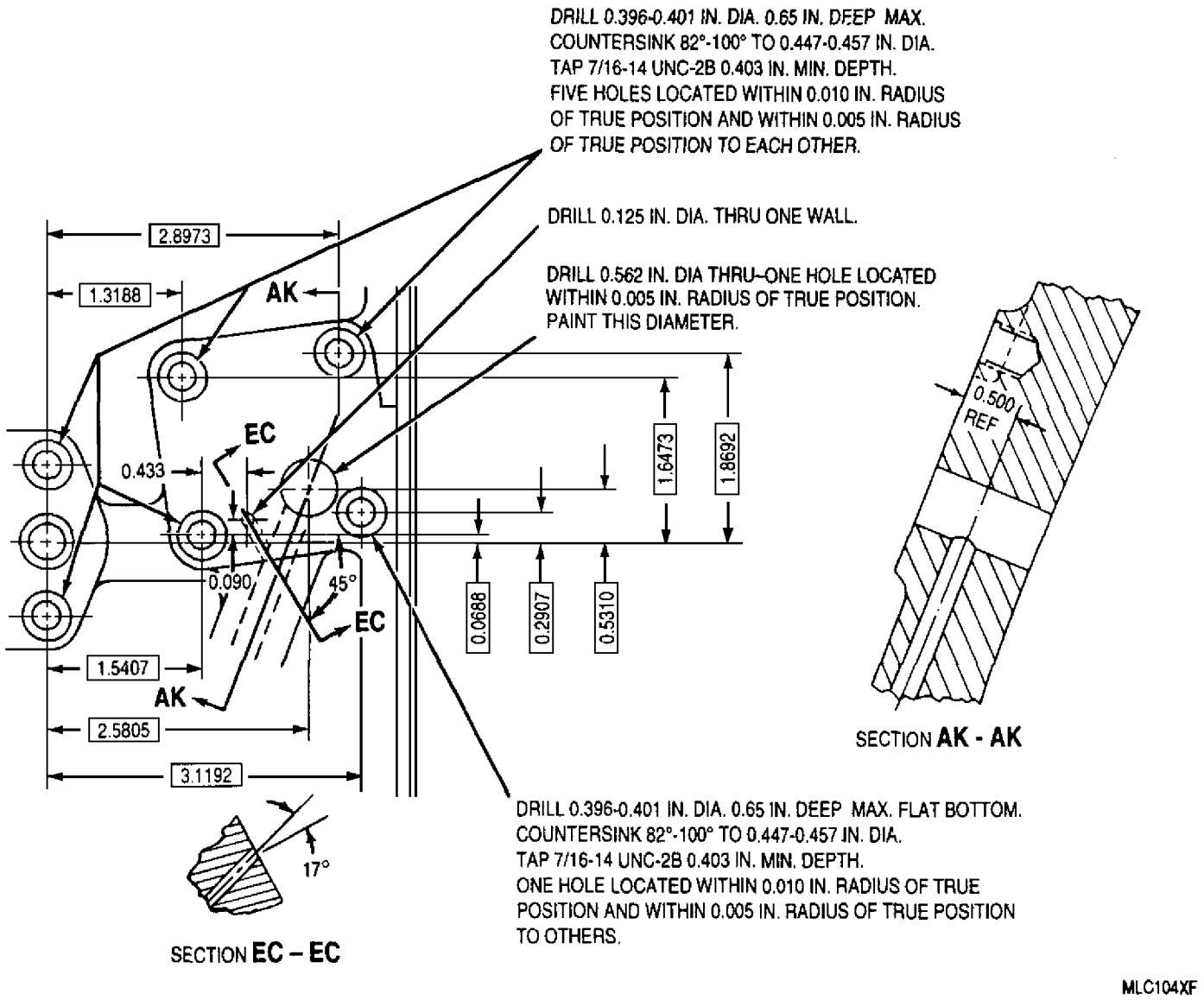

Figure 1. Anti−Icing Valve Mounting Pad Repair

6. AIR INLET HOUSING ASSEMBLY − ANTI−ICING VALVE MOUNTING PAD REPAIR.

Materials Required

Specification No./Part No.	Nomenclature
AMS 4190	Wire, welding
MS51831A202L	Insert
ZP−4	Developer, dry
10X	Magnifier
——	Blanket, asbestos

a. If the housing is otherwise acceptable within limits stated in table 1, weld repair the oversized or damaged holes in the inlet housing mounting pad as follows and refer to figure 1.

(1) Grind or mill away the side of the pad and clean parent metal in the area of weld.

(2) Weld in a horizontal position, using inert gas arc method. Support part during entire operation. Use AMS 4190 filler material for aluminum, 1/8 in. diameter maximum.

NOTE

Weld is to extend 3/32 in. above surface to permit stock removal for finishing surfaces.

(3) Buildup area with stringer beads, using amperage foot control on welder.

CAUTION

When inspecting metallized housings with fluorescent penetrant materials, do not use wet developing solutions, ZP−4 dry developer must be used for this inspection.

NOTE

Allow two to three minutes between the subsequent welds to prevent excessive heat from being induced into the surrounding area. Keep chill fixtures around weld area until piece has cooled to room temperature. Cover with asbestos blanket.

(4) Examine the completed weld with a 10X magnifier, remove all visible defects, and reweld where necessary. FPI after finish machining.

WARNING

Heated parts will cause skin damage (burns). Use clean insulated gloves to handle parts.

(5) After repair welding, stress−relieve for 2 hours at 350°F (177°C).

(6) Smooth up any minor damage to machined surfaces to remove burrs or roughness.

(7) Drill, tap, and install inserts per figure 1.

7. AIR INLET HOUSING ASSEMBLY − PILOT LIP OR RING REPLACEMENT.

Support Equipment Required

Part No./Type Designation	Nomenclature
23034352	Gage, pilot sleeve bore ID checking
23034353	Master, pilot ID checking gage
23034354	Master, pilot OD checking gage
23034355	Gage, pilot OD checking
23034357	Master, pilot sleeve ID checking gage
6797971	Fixture, holding

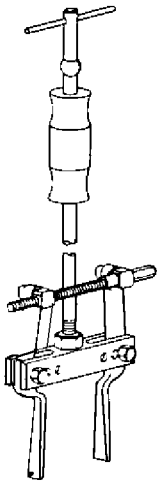

Figure 2. 6798844 Compressor Front Bearing Cage Puller

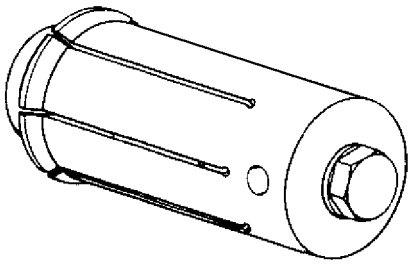

Figure 3. 6872235 Side Gear Bearing Cage Puller

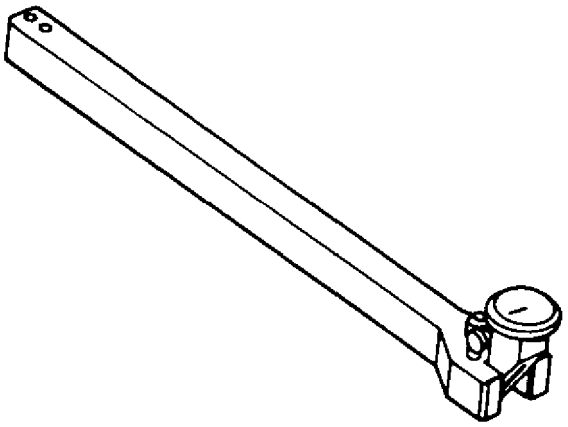

Figure 4. 23034355 Air Inlet Housing Pilot OD Checking Gage

Materials Required

Specification No./Part No.	Nomenclature
AMS 3135	Sealer, resin
MIL−C−5541	Coating, conversion
——	Dry ice

a. With 6797971 (figure 15) air inlet housing holding fixture mounted in a lathe, install the housing on holding fixture (figure 16).

b. Remove the lip or ring by machining, maintain all dimensions. Break sharp edges 0.010 in.

c. The machined ID must be concentric with the axis established by the rear splitline and the extension shaft bore within 0.005 in.

d. Check machined ID with 23034357 gage master (figure 17) and 23034352 pilot sleeve bore ID checking gage (figure 7).

Chemical Conversion Coating MIL−C−5541 **30**

NOTE

Housing ID can be repaired by metallizing per WP 018 00 with Sprabond and Sprabronze AA wire. Metallized coating must not exceed a thickness of 0.040 in. after machining to size.

e. Treat exposed areas of housing with MIL−C−5541 coating.

WARNING

Heated parts will cause skin damage (burns). Use clean insulated gloves to handle parts.

f. Fabricate pilot ring from AMS 5643 per figure 6. Heat treat ring in a neutral or slightly reducing atmosphere to 1875−1925°F (1024−1052°C), hold at temperature for one hour per in. of max cross section or 30 minutes minimum, and cool to 90°F (32°C) prior to installation.

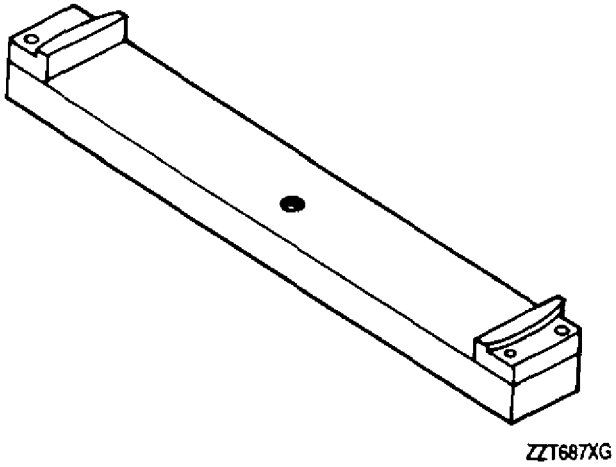

Figure 5. 23034354 Air Inlet Housing Pilot OD Checking Gage Master

Dry Ice, BB−C−104 **55**

g. Heat air inlet housing to 400°F (204°C). Chill pilot ring in dry ice.

h. Install chilled pilot ring.

i. Load the ring with a heavy plate until housing cools.

j. Install inlet housing on 6797971 inlet housing holding fixture (figure 15), mounted in a lathe, and machine pilot ring as shown in figure 6. Use care as tool approaches the aluminum housing ID. A change in tool pressure will groove housing. The existing housing ID shall not be machined. The machined pilot ring ID and OD must both be concentric with the axis established by the rear splitline and the extension shaft bore within 0.002 in. FIR.

k. Check the pilot ring ID and OD (figure 18) with 23034352 and 23034355 checking gages (figures 7 and 4) and 23034353 and 23034354 gage masters (figures 8 and 5).

l. Blend all sharp edges.

m. Apply AMS 3135 resin sealer per WP 018 00, to the pilot ring to housing split lines. Wipe off excess sealer and air dry.

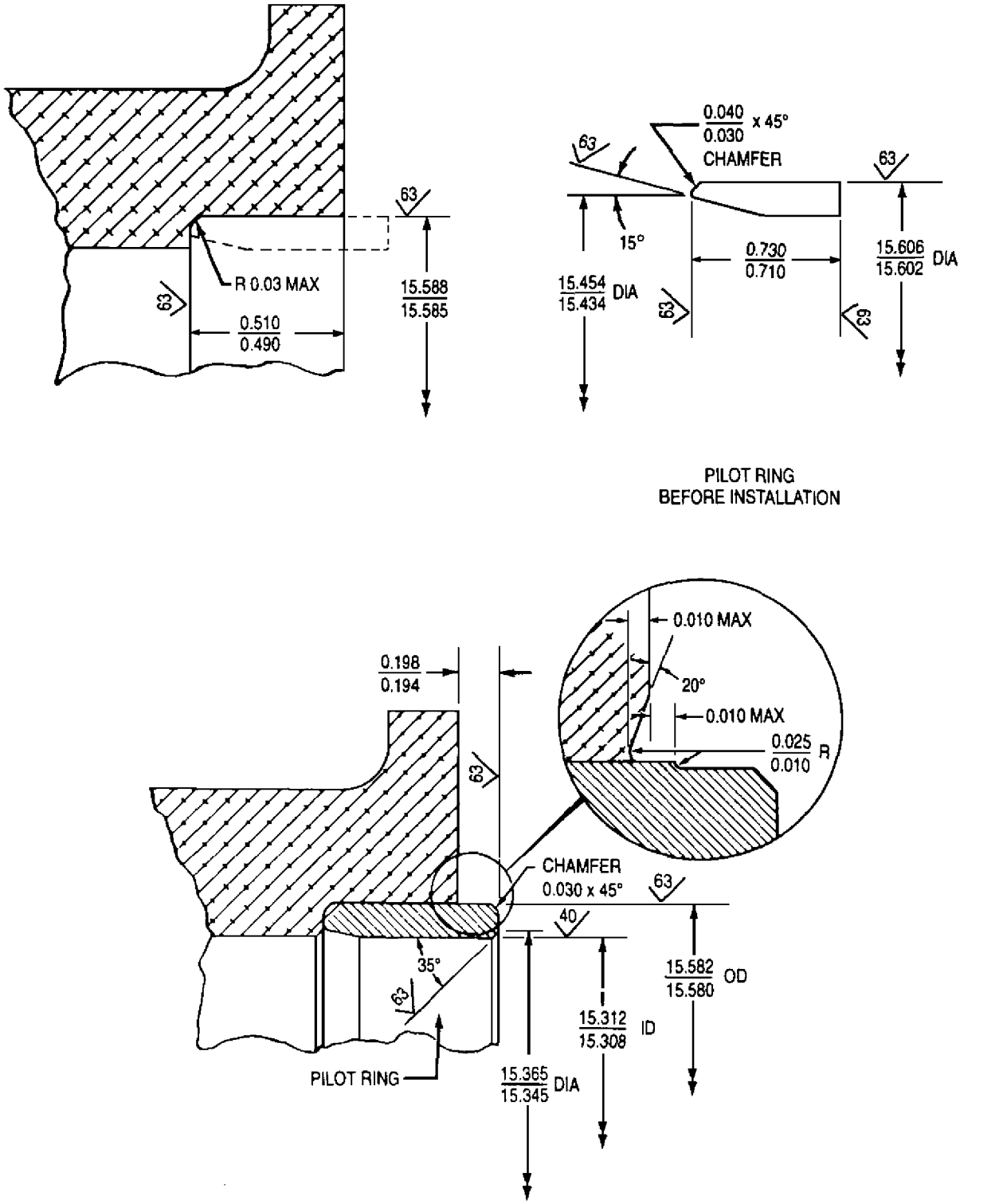

Figure 6. Air Inlet Housing Rear Pilot Ring Installation

8. AIR INLET HOUSING ASSEMBLY − METALLIZING OF EXTENSION SHAFT HOUSING BORE.

Materials Required

Specification No./Part No.	Nomenclature
AMS 3135	Sealer, resin
O−A−51	Acetone
MIL−PRF−680, type II	Solvent, cleaning
Sprabond	Coating, metal (CAGE 39918)
Sprabronze AA	Coating, bronze (CAGE 39918)
ZP−4	Developer, dry
——	Grit, aluminum oxide (20−50 mesh)

a. Remove four studs from Surface D (figure 9).

b. Remove 0.010 − 0.014 in. stock from bore, channels, and bottom face of bore (0.024 in. increase at diameter).

(1) Mount the housing in a vertical lathe, rear flange down. Center Diameter C (cage) over a pilot block. Control squareness of bore at Surface E and clamp mounting face to support blocks. Distance from top of pilot block to flange blocks shall not exceed 1.150 in. and radial clearance must exist between support blocks and mounting flange pilot.

(2) If bore has previously been metallized, depth of cut should be a minimum to remove only the metallizing through the bonding (first) layer. Maximum stock removal (on parts previously metallized) should be such that the thickness of metallized coating after machining does not exceed 0.042 in.

(3) Machine as required, using one roughing cut at 180 rpm with a 0.005 in./min feed.

Acetone O−A−51 **61**

c. Thoroughly clean area using O−A−51 acetone.

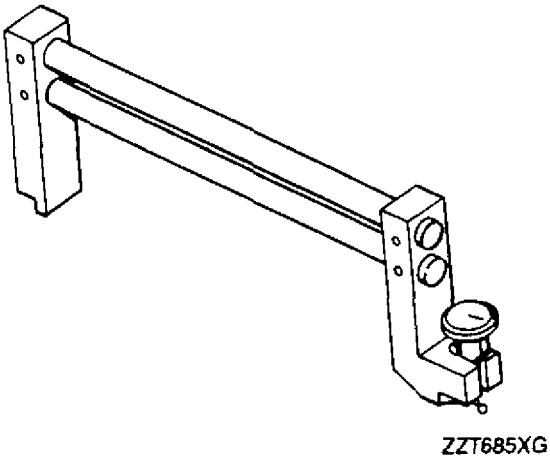

Figure 7. 23034352 Air Inlet Housing Pilot Sleeve Bore ID Checking Gage

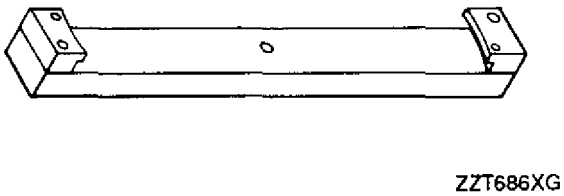

Figure 8. 23034353 Air Inlet Housing Pilot ID Checking Gage Master

CAUTION

Touching or contaminating surfaces prior to metallizing will create an inferior bond.

d. Mask part and dry grit blast area using 20 to 50 mesh aluminum oxide grit at 50 psi air pressure. Blast surface until a uniform, dull, matte finish is obtained. Make sure edges of channels are adequately blasted. After blasting, if cork plugs are not flush with ID surfaces, push plugs back into place using 1/8 in. diameter rod. Mask parts as follows:

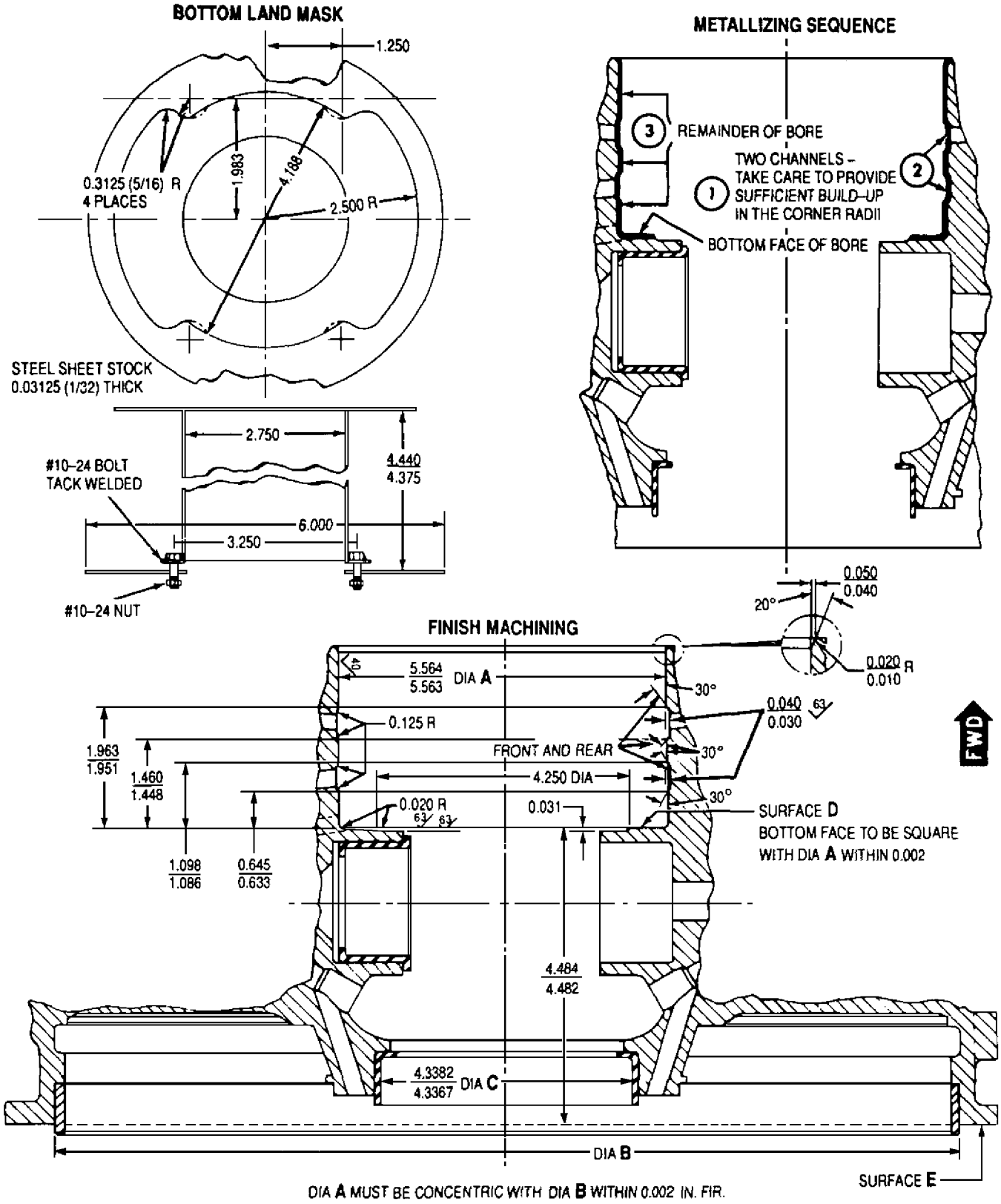

Figure 9. Air Inlet Housing Rework

MLL058XA

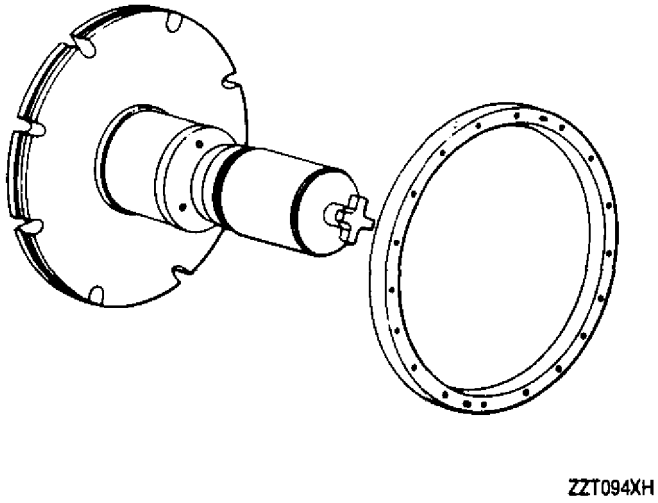

Figure 10. 6799595 Concentricity Checking Fixture

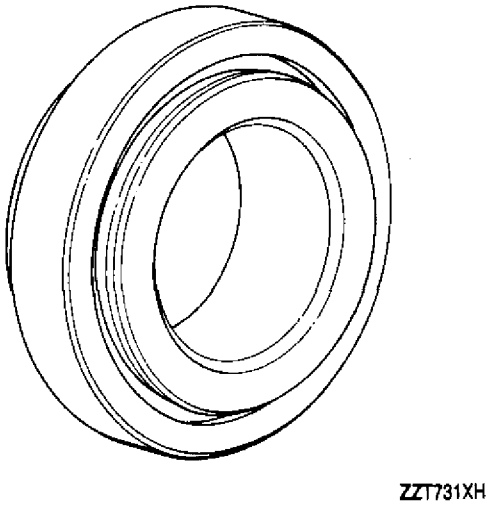

Figure 11. 6799647 Checking Adapter

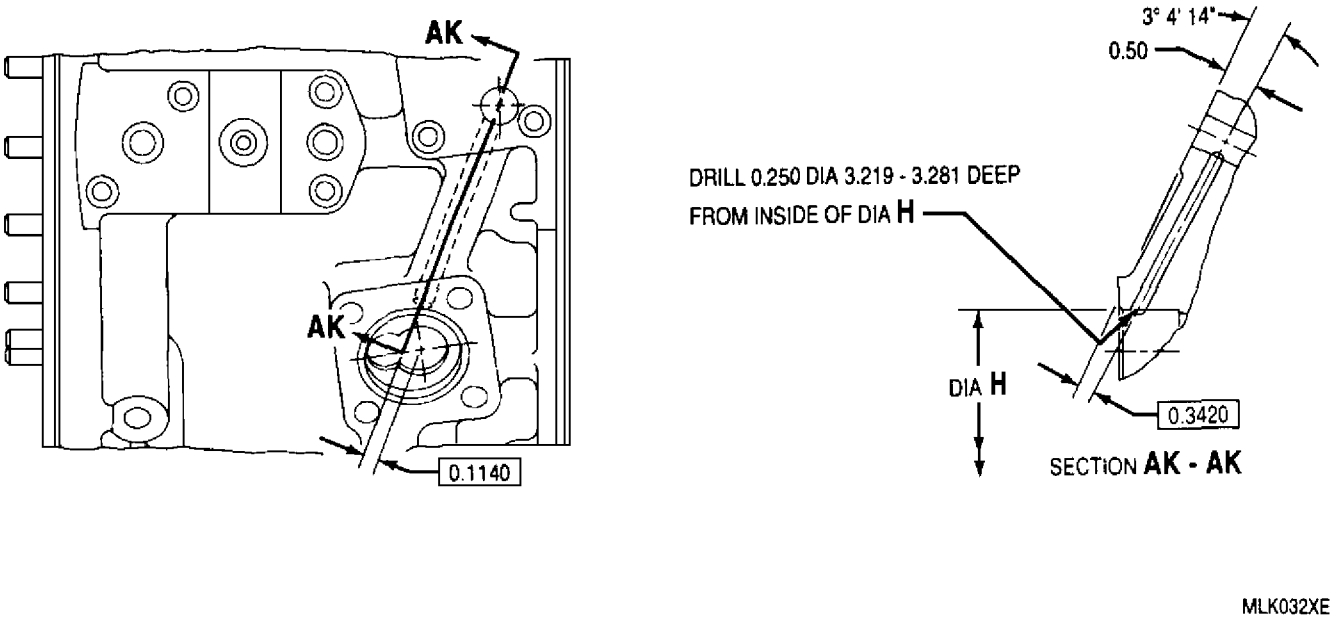

Figure 12. Temperature Probe Assembly Pad Bore Repair

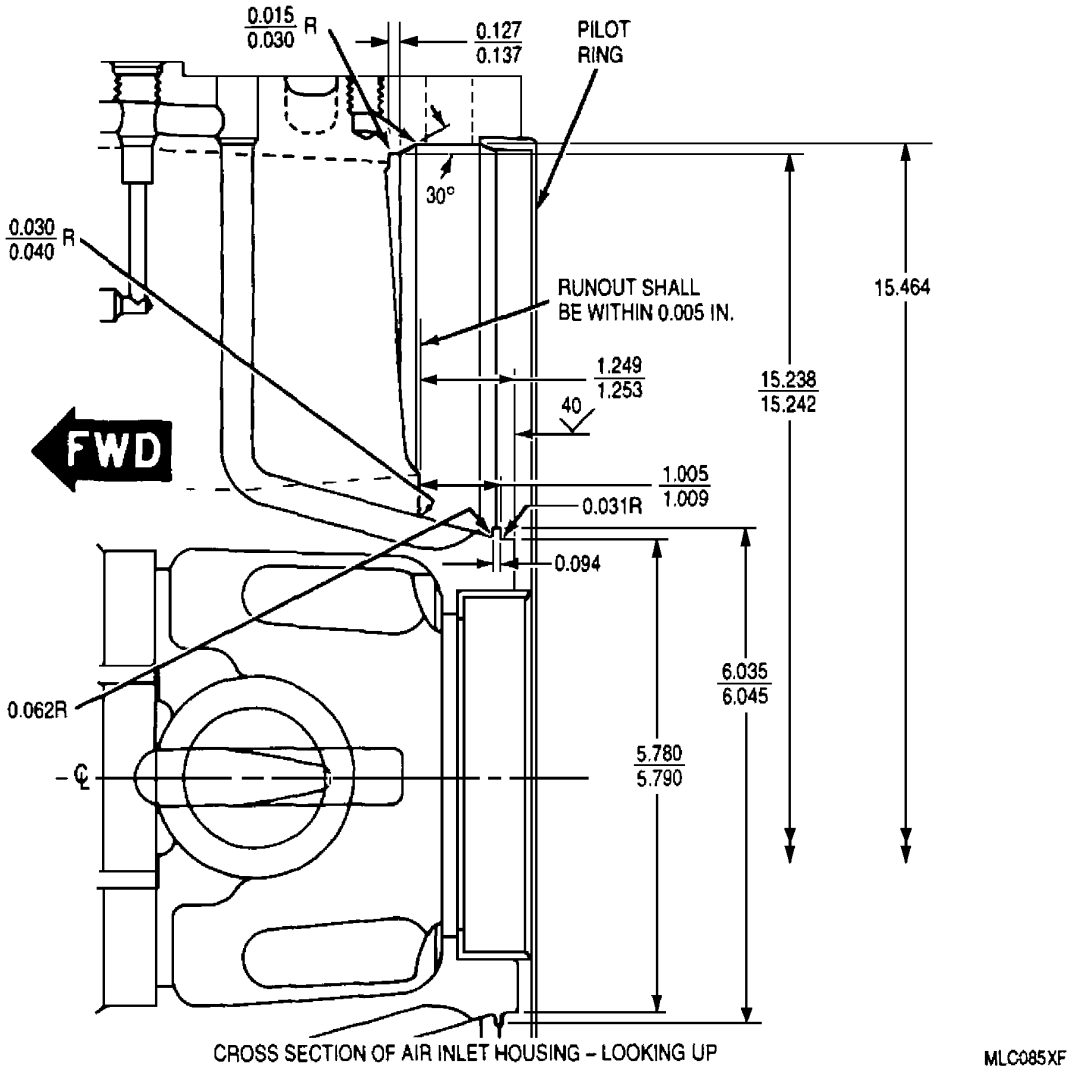

Figure 13. Air Inlet Housing Repair

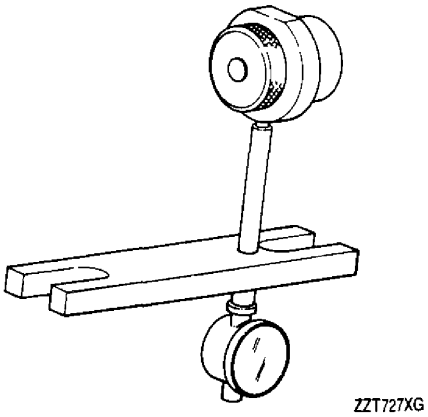

Figure 14. 6799573 Air Inlet Housing Installation Measurement Shim Gage

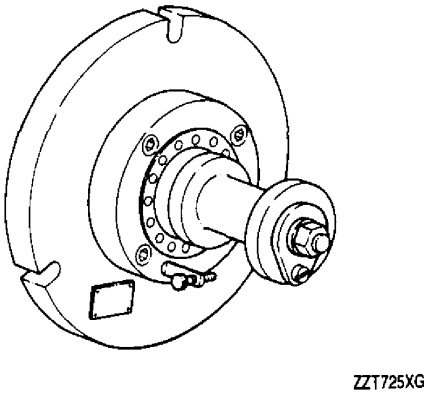

Figure 15. 6797971 Air Inlet Housing Holding Fixture

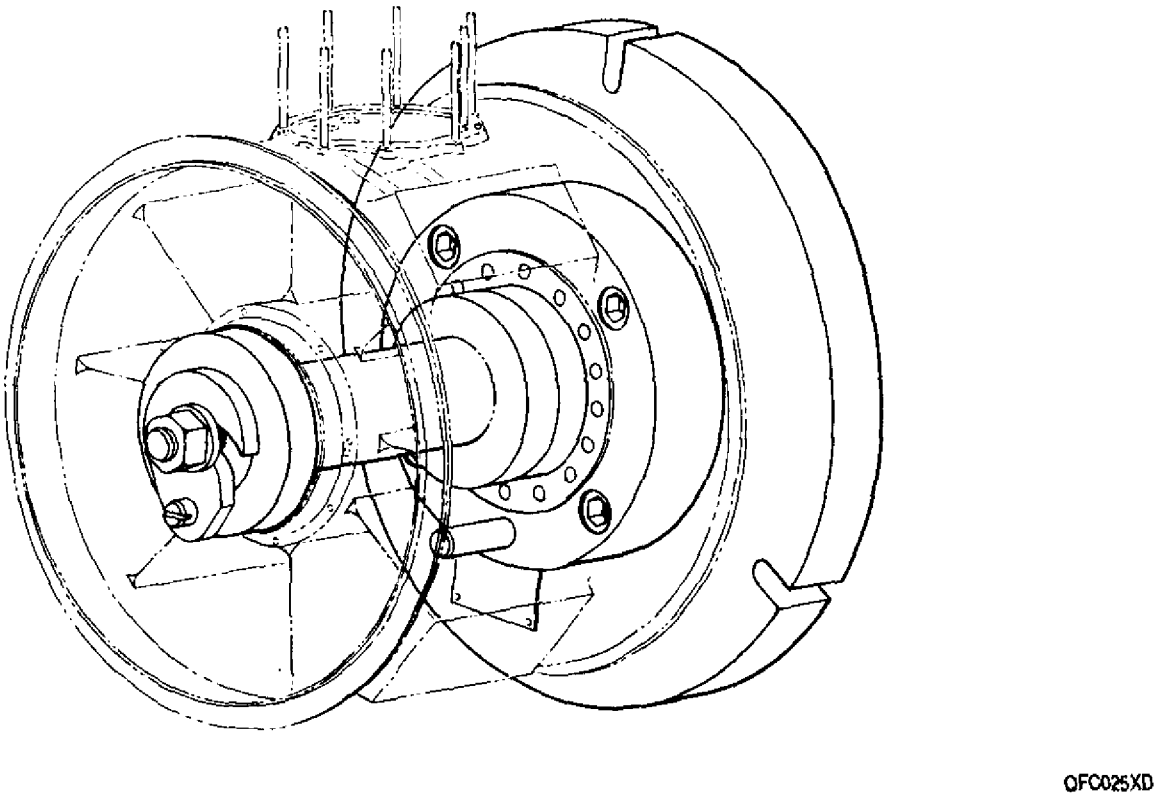

Figure 16. Air Inlet Housing Installed on Inlet Housing Holding Fixture

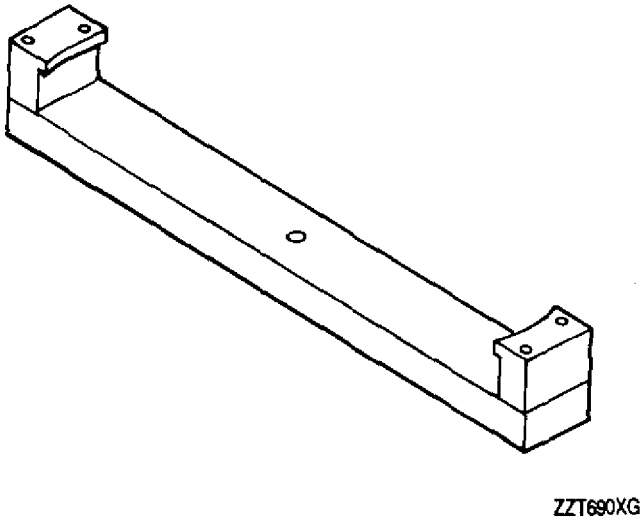

Figure 17. 23034357 Air Inlet Housing Sleeve Pilot ID Gage Master

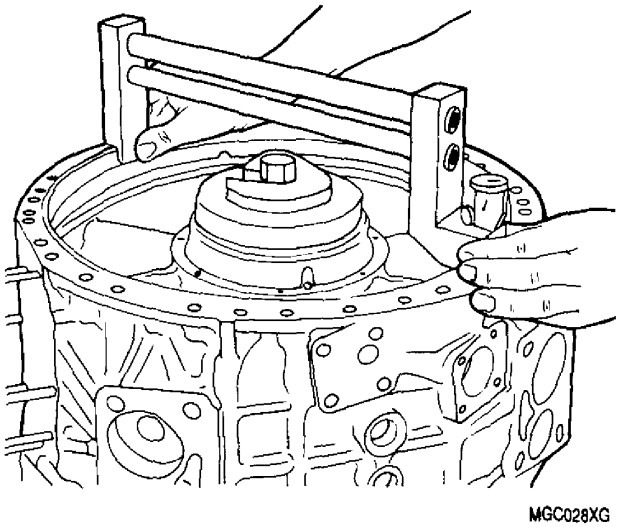

Figure 18. Measuring ID of Air Inlet Housing Pilot Ring

(1) Fabricate a grit blast shield, 1/32 in. thick x 18 in. OD x 5.665 in. ID. Drill sixteen 3/8 in. diameter holes through at 6.3125 in. diameter. Place shield in place over the sixteen studs on front face and secure with 5/8 in. ID sleeves and 5/16 in. nuts.

(2) Fabricate bottom land mask as shown in figure 9 and install in bottom of bore.

(3) Mask the bottom flange inner edges with masking tape.

(4) Plug all air and oil holes in Diameter A bore and channels. Use 5/16−18 thread headless set screws in the four stud holes at bottom land. Use cork stoppers at other locations and trim off flush with surface.

WARNING

Heated parts will cause skin damage (burns). Use clean insulated gloves to handle parts.

e. Preheat part to 175−200°F (79.4−93.3°C) and apply Sprabond coating to approximately 0.001 − 0.003 in. thick. After bond application, apply finish coating of Sprabronze AA as required. Finish coating should be applied within 30 minutes after application of bonding coat. Instructions are as follows:

(1) For mounting on front flange, remove grit blast shield and replace with similar mask except the OD must be 15.625 in. in diameter. Mount part in lathe (or suitable equipment) and rotate at approximately 100 rpm during metallizing. A fixture should be utilized which enables preheating with the housing attached and rapid mounting for metallizing. The 175 − 200°F (79.4 −93.3°C) temperature should be maintained during the spray coating process.

(2) Spray coat the surfaces using the sequence of areas as shown. Gun angle should be at approximately 60° with Diameter A bore wall. After metallizing, carefully remove masks.

f. Mount housing on Surface E, and center on Diameter C (as previously described). Rough machine at 100 rpm with a 0.005 in./min feed, leaving enough stock for finish. Finish machine to dimensions shown at 180 rpm with a 0.003 in./min feed.

g. Apply AMS 3135 resin sealer as follows:

(1) Apply sealer by brushing or spraying. Allow sufficient time between coats for absorption. Impregnation is complete when sealer is no longer absorbed. Remove excess resin.

(2) Air dry for one hour, bake at 150°F (65.5°C) for one hour, final bake at 425°F (218.3°C) for two hours and air cool.

(3) The coating must be adherent, uniform, and free from blisters, chips, or other defects.

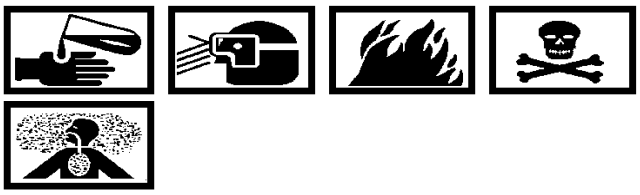

Dry Cleaning Solvent
MIL−PRF−680, Type II **3**

CAUTION

Do not use water or water based liquids for pressure test.

h. Pressure test oil and air passages per paragraph 20, this WP. Use MIL−PRF−680, type II dry cleaning solvent as a pressure test fluid instead of MIL−PRF−23699 oil.

i. Replace the four removed studs in Surface D.

9. AIR INLET HOUSING ASSEMBLY − CRACK REPAIR.

Materials Required

Specification No./Part No.	Nomenclature
AMS 4190	Wire, welding
10X	Magnifier

a. Clean parent metal in area of weld.

b. Weld in a horizontal position, using inert gas arc method and AMS 4190 welding wire. Support part during entire operation.

c. Buildup area with stringer beads, using amperage foot control on welder.

NOTE

Allow two to three minutes between the subsequent welds to prevent excessive heat from being induced into the surrounding area. Keep chill fixtures around weld area until piece has cooled to room temperature. Cover with asbestos blanket.

d. Weld is to extend to at least 3/32 in. above surface to permit stock removal for finishing surfaces.

e. Examine completed weld with a 10X magnifier; remove all visible defects, and reweld where necessary.

WARNING

Heated parts will cause skin damage (burns). Use clean insulated gloves to handle parts.

f. After repair welding, stress−relieve for two hours at 350°F (177°C).

10. AIR INLET HOUSING ASSEMBLY − STRUT REPAIR (EXCLUDING CORROSION DAMAGE).

Materials Required

Specification No./Part No.	Nomenclature
AMS 4190	Wire, welding
MIL−C−5541	Coating, conversion

CAUTION

Do not use abrasive cloth on surface.

a. Remove burrs and sharp edges.

b. Build up area with stringer beads. Avoid prolonged heating in localized areas. Cool in still air or furnace.

c. Repair by inert gas arc welding with AMS 4190 welding wire. Extend weld 3/32 in. above surface to permit stock removal for finishing.

d. Examine the complete weld for irregularities and re−weld where necessary.

WARNING

Heated parts will cause skin damage (burns). Use clean insulated gloves to handle parts.

e. Heat treat at 400°F (204°C) for four hours and cool in still air.

f. Blend the weldment into the contour of adjacent surfaces.

g. After finishing, X−ray or fluorescent penetrant inspect the weld area.

Chemical Conversion Coating
MIL−C−5541 **30**

h. Treat the repaired area with MIL−C−5541 conversion coating.

i. Pressure check air and oil passages adjacent to weld repaired area per paragraph 19, this WP.

11. AIR INLET HOUSING ASSEMBLY − STRUT CORROSION REPAIR.

Support Equipment Required

Part No./Type Designation	Nomenclature
K or Y	Machine, metallizing
4E, 8E, 10E	Metco gun (CAGE 39918)

Materials Required

Specification No./Part No.	Nomenclature
Metcolite C	Grit, 20 to 50 mesh (CAGE 39918)
No. 180 or 320	Paper, grit
O−A−51	Acetone
Sprabronze C or AA	Coating, bronze (CAGE 39918)
——	Dry ice

Acetone O−A−51 **61**

a. Thoroughly clean area using O−A−51 acetone.

NOTE

Be sure all holes, other than where the coating is desired, are properly masked.

b. Mask the part so as to leave exposed only the area to be coated. Masks may be steel, brass, or other material properly protected against adherence of the bronze spray coating.

c. Grit blast the masked part using 20 to 50 mesh Metcolite C grit under 50 psi air pressure. Continue blasting until the surface has a uniform dull matte finish.

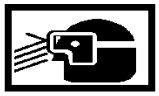

Compressed Air **56**

d. Remove all loose grit and dust with dry compressed air; prevent contamination of the prepared surface by contact or other means. The part shall be metal sprayed as soon as possible after blasting, but in no case longer than two hours after preparation.

WARNING

Heated parts will cause skin damage (burns). Use clean insulated gloves to handle parts.

e. Preheat the cleaned and masked part to 175 − 200°F (79.4 − 93.3°C). Spray the bronze coating alloy, Metco Sprabronze C or AA, on the desired surface to a uniform thickness of 0.003 − 0.007 in., using a Metco Type 4E, 8E or 10E gun or Type K or Y metallizing machine. Remove the masks in a manner which will avoid damage to the metallized coating.

f. Smooth out by hand any perceptible surface projections in the bronze coating, using No. 180 or 320 grit paper. Clean dust from the surface, using dry compressed air.

g. Paint the housing with two coats except split lines, flanges, mounting pads, holes, the extension shaft housing bore, and the front compressor bearing cage bore. Refer to paragraph 18, this WP.

12. AIR INLET HOUSING ASSEMBLY − INLET VANE O−RING SEAL GROOVE REPAIR.

Materials Required

Specification No./Part No.	Nomenclature
AMS 4190	Wire, welding

a. Grind out all corroded areas (figure 13).

NOTE

Alternate weld buildup areas from side to side to prevent excessive heat buildup.

b. Build up ground out areas by inert gas welding using AMS 4190 welding wire.

WARNING

Heated parts will cause skin damage (burns). Use clean insulated gloves to handle parts.

c. Stress relieve part at 350°F (177°C) for two hours and air cool.

d. Machine part to dimensions shown on figure 13.

CAUTION

When inspecting metallized housings with fluorescent penetrant materials, do not use wet developing solutions, ZP−4 dry developer must be used for this inspection.

e. X−ray or FPI the ID and OD of the repaired area.

13. AIR INLET HOUSING ASSEMBLY − MOUNTING PAD BORES REPAIR.

Materials Required

Specification No./Part No.	Nomenclature
AMS 2475	Solution, chrome−pickle
AMS 4395	Wire, welding
AMS 3135	Sealer, resin
——	Paint, nubelon

a. Route out corroded area making certain material removed is held to a minimum.

b. Build up bottom of mounting pad bore using AMS 4395 filler material.

c. Machine bottom of pad bore to drawing limits.

WARNING

Heated parts will cause skin damage (burns). Use clean insulated gloves to handle parts.

d. Stress relieve at 400°F (204°C) for 2 hours. Allow to air cool.

e. Fluorescent penetrant inspect for cracks.

f. Dichromate reworked area using AMS 2475 solution.

g. Apply Nubelon paint to machined surface only.

h. Apply AMS 3135 resin sealer on mating surface between strut fittings and housing.

14. AIR INLET HOUSING ASSEMBLY − REWORK.

15. Temperature Probe Assembly Pad Bore Rework.

Materials Required

Specification No./Part No.	Nomenclature
AMS 4434	Alloy, magnesium
——	Dry ice

a. Machine Diameter H to a 1.657 − 1.658 in. diameter, 1.020 in. deep (figure 12).

b. Fabricate a sleeve from AMS 4434 magnesium alloy to a 1.659 − 1.660 in. diameter OD by 1.418 − 1.420 in. ID by 1.625 − 1.635 in.

WARNING

Heated parts will cause skin damage (burns). Use clean insulated gloves to handle parts.

Dry Ice, BB−C−104 **55**

c. Heat case to 300°F (149°C) and chill sleeve in dry ice and alcohol. Install sleeve in case.

d. Pin sleeve in one location approximately 1/2 in. from top of pad and 180° from air passage. Use brass pin 0.0937 in. diameter by 0.250 in. long.

e. Drill air passage 0.250 in. through sleeve per figure 12.

f. Finish bore sleeve to 1.468 − 1.470 in. diameter. Contour inner end of sleeve to blend with case wall and countersink outer end 60° to a 1.527 − 1.537 in. diameter.

16. AIR INLET HOUSING ASSEMBLY − ANTI−ICING AIR PASSAGES REWORK.

Materials Required

Specification No./Part No.	Nomenclature
MIL−PRF−680, type II	Solvent, dry cleaning
Resiweld 7111	Adhesive (CAGE 92528)

Dry Cleaning Solvent MIL−PRF−680, Type II **3**

a. Clean passages by soaking with MIL−PRF−680, type II dry cleaning solvent, drain and dry.

b. Temporarily plug intersecting 1/4 in. diameter radial strut hole and apply Resiweld adhesive no. 7111 to fill the eroded cavity and bottom of the 3/8 in. diameter hole to approximately 1/2 in. rear of the intersecting 1/4 in. diameter hole. Apply Resiweld adhesive as follows:

(1) To facilitate flow of adhesive, warm the mixture to approximately 140°F (60°C).

(2) A 1/8 in. ID x 3 in. copper tube may be brazed on a hypodermic syringe to facilitate application of adhesive.

WARNING

Heated parts will cause skin damage (burns). Use clean insulated gloves to handle parts.

c. Cure the adhesive by heating the housing within 350−400°F (177−204°C) for 25 − 35 minutes.

NOTE

Position the housing rear splitline face up to keep adhesive in the eroded cavity.

d. Locating at the two anti−icing air holes, 0.375 in. diameter (rear side of housing at three and nine o'clock); drill and ream to a 0.437 − 0.438 in. diameter x 2.675 in. deep. Remove studs as required to facilitate repair.

e. Heat the housing to 350°F (177°C) for one hour. Install the anti−icing passage insert flush to 0.010 in. below surface.

NOTE

For optimum results, apply adhesive to the insert OD at installation and heat the housing for 30 minutes at 350°F (177°C).

f. Bend the protruding insert against the side and bottom of the existing 0.375 in. diameter x 0.438 in. deep intersecting hole.

g. Locating at the two existing anti−icing air holes, 0.250 in. diameter (OD of housing at three and nine o'clock); drill through one wall of the insert (two places per housing, one place per insert) with a flat bottom drill.

h. Pressure test per paragraph 19, this WP.

i. Replace all removed studs.

17. AIR INLET HOUSING ASSEMBLY − ANTI−ICING VALVE MOUNTING PAD REWORK.

Materials Required

Specification No./Part No.	Nomenclature
AMS 2471	Anodize
AMS 3135	Sealer, resin

a. Cleaning:

(1) Using the valve gasket as a template, grind or mill away all corrosion within the area enclosed by the gasket, providing the thickness of the inlet housing wall is not less than 0.250 in. after grinding.

(2) Minor corrosion in the area covered by the gasket may also be removed, providing resulting depressions after grinding do not interconnect to form depressions or grooves in excess of one half of the gasket width.

b. Coating:

(1) After all corrosion has been removed, anodize aluminum housing using AMS 2471 over entire reworked area.

(2) Impregnate the entire reworked area with AMS 3135 resin sealer per WP 018 00.

18. AIR INLET HOUSING ASSEMBLY − SURFACE REFINISHING.

Materials Required

Specification No./Part No.	Nomenclature
AMS 3135	Sealer, resin
H−251	Thinner, Actithane (CAGE 11931)
MIL−M−3171 Type III	Solution, magnesium alloy
MIL−S−4383	Compound, sealing
O−A−51	Acetone
O−N−350	Acid, nitric (HNO_3)
S−1193	Paint Glyptol (CAGE 08800)
S−1195	Thinner, paint (CAGE 08800)
Turco Transpo 608	Remover, paint (CAGE 61102)
WC 100	Paint, Actithane (CAGE 11931)
1200	Alodine
4240−00−052−3776	Goggles, protective
8415−00−266−8675	Gloves, rubber
A−A−1049	Cloth, emery
——	Brush, nylon bristle
——	Grit, blasting, soft shell

Acetone O−A−51 **61**

a. Remove all grease and oil from the air inlet housing by thoroughly cleaning area with O−A−51 acetone.

WARNING

Paint remover is flammable and toxic. Do not use near open flame or sparks. Use only in well−ventilated areas. Do not allow contact with skin or eyes. Use rubber gloves and goggles or faceshield for protection.

b. Immerse air inlet housing in Turco Transpo 608 or equivalent only as long as necessary for satisfactory softening and loosening of the paint film.

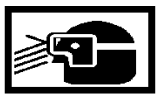

Compressed Air **56**

NOTE

Paint stripping solutions will remove resin sealer from the housing. Metallized areas and machined surfaces must be recoated with AMS 3135 resin sealer per WP 018 00.

c. Rinse parts thoroughly with cold running water followed by a hot water rinse. Blast with compressed air until all loose paint is removed and part is dry.

CAUTION

Soft shell grit blasting of parts shall be kept to a minimum to minimize effects on base metal surface treatment.

d. Remove any remaining paint film by soft shell (black walnut) grit blasting using 60 psi. Feed the material by gravity to an air nozzle from an overhead hopper.

e. If air inlet housing is painted immediately after cleaning, no additional cleaning is necessary. If there is a delay between operations, or if handled in a manner that permits surfaces to become contaminated with oil or other foreign material, the following procedure shall apply.

Acetone O−A−51 **61**

(1) Thoroughly clean area using O−A−51 acetone.

(2) Handle air inlet housing with clean rubber gloves.

(3) Keep the time interval between cleaning and application of the paint to a minimum.

f. The entire housing shall be painted, except for the following designated areas.

(1) Internal passages.

(2) Tapped and reamed holes.

(3) Inlet guide vane inner band locating surfaces.

(4) Pilot holes in the four strut attaching pads.

(5) Rear mounting flange and adjacent inlet guide vane seat.

(6) Area inside the accessory housing and engine vent mounting surfaces.

(7) Extension shaft housing and compressor front bearing bore.

(8) External oil line attaching pad.

(9) Accessory housing and engine vent mounting surfaces, except that rearmost 1/2 in. of the accessory housing mounting surface shall be painted.

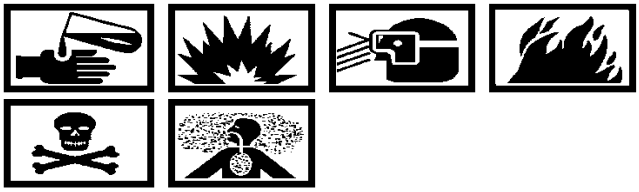

Actithane Paint WC 100 **11**

g. WC 100 Actithane paint is a two−component package which requires mixing. Blend three parts paint by volume with one part activator by volume. Thoroughly blend the mixture and allow it to age at least 15 minutes before using.

WARNING

Heated parts will cause skin damage (burns). Use clean insulated gloves to handle parts.

NOTE

Mixed paint has a limited pot life of approximately eight hours at room temperature. Pot life may be extended by keeping container tightly covered and in a refrigerator. (Alternate paint and thinner) Epoxy enamel, Glyptol S−1193 gray, manufactured by General Electric Co., Laminated and Insulating Materials Dept., Schenectady, N.Y. 12306. Thinner is Glyptol No. S−1195.

h. Spray with two coats of paint. Air dry each coat for 15 minutes and then bake at 285 − 315°F (141 − 157°C) in an electrically heated oven only, for not less than 20 minutes. Finished paint thickness must be 0.002 − 0.005 in. Exposure of this paint to combustion products present in a gas fired oven tend to discolor paint film.

i. Paint coating must be continuous, uniform, and free from bubbles, pin holes, runs, sags, and other surface imperfections.

j. Damaged paint coating may be reconditioned as follows:

(1) Abrade the damaged and surrounding area with emery cloth.

(2) Wipe the abraded area with thinner, Actithane H 251 and apply a coat of paint.

Magnesium Treatment (Chrome Pickle)
MIL−M−3171, Type III (Dow 19) 13

(3) When bare metal is exposed the area shall be treated with MIL−M−3171, Type III, magnesium alloy solution prior to painting.

(4) Brush or spray paint the prepared surfaces and cure the paint per preceding instructions.

k. Paint coating that is damaged, bare metal exposed, may be repaired by abrading the area with emery cloth and using the following touch up procedure:

(1) Rinse or swab area to be treated with clean water.

WARNING

Alodine 1200 and concentrated nitric acid solution is flammable and injurious to the skin and clothing. Do not use near open flame and sparks. Use protective goggles or faceshield, rubber gloves, aprons, etc. when working with solution.

Water rinse all brushes and swabs after use to minimize fire hazard.

(2) While still wet, coat area with an aqueous solution of Alodine No. 1200 (3 oz./gal) and concentrated O−N−350 nitric acid (1/2 fluid oz/gal), using a nylon bristle brush.

(3) Both housing and solution must be maintained at room temperature. Allow solution to remain on area from one to five minutes, but in no case shall it dry on the part.

(4) Rinse or swab the coated area thoroughly with clean water to completely remove all remaining solution.

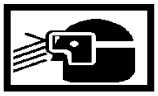

Compressed Air 57

(5) Dry surface with clean, dry compressed air.

(6) Surface may be subsequently painted without further treatment.

l. Paint and cure the touched−up area per the preceding procedure. Localized heat curing is permissible.

m. Install air sensing tip in housing.

n. Apply, by brush, a thin coat of MIL−S−4383 sealing compound to the leading edges of the struts from hub to rim and for at least 1.00 in. rearward. Let coating air dry for 20 to 30 minutes. Apply at least two coats of the material; apply additional coats if time permits. This material is a clear, thin, amber colored fluid. Discard material when it becomes tacky and semi−solid.

19. AIR INLET HOUSING ASSEMBLY − PRESSURE TEST.

Support Equipment Required

Part No./Type Designation	Nomenclature
6796984	Fixture, pneumatic testing
6796985	Fixture, hydraulic pressure test
6799597	Fixture, pressure test

Materials Required

Specification No./Part No.	Nomenclature
MIL−PRF−23699	Oil, lubricating

a. Attach 6796984 pneumatic testing fixture (figure 19) to inlet housing (figure 20). Pressure test air passages at 60 psi using air or nitrogen. Hold test pressure for at least five minutes. Leakage is allowed around the two flanged bushings, not to exceed 1 psi per minute. No other leakage is allowed.

b. Attach 6796985 hydraulic pressure fixture (figure 21) to inlet housing. Pressure test oil passages to both of following tests.

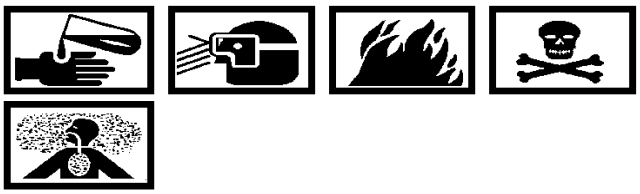

Lubricating Oil, MIL−PRF−23699 **2**

(1) Subject passages to 100 psi for at least five minutes, using MIL−PRF−23699 engine oil or a liquid with a viscosity similar to water. No leakage is allowed.

NOTE

The fixture oil inlet and outlet plugs are equipped with air vents to bleed air during the hydraulic test. Ensure a positive flow of testing fluid from these vents prior to closing.

(2) Subject passages to 30 psi for at least five minutes, using air or nitrogen. No leakage is allowed.

NOTE

Make certain the pressure fixture air vents are closed during the pneumatic test.

c. Attach 6799597 pressure test fixture (figure 22) to the inlet housing. Pressure test anti−icing air passages at 60 psi using air or nitrogen. Hold test pressure for at least five minutes. No leakage is allowed.

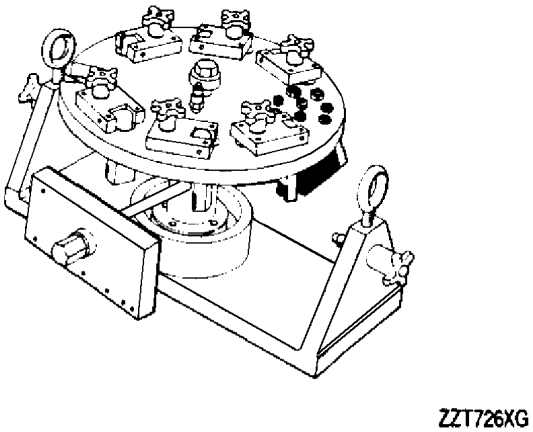

Figure 19. 6796984 Pneumatic Testing Fixture

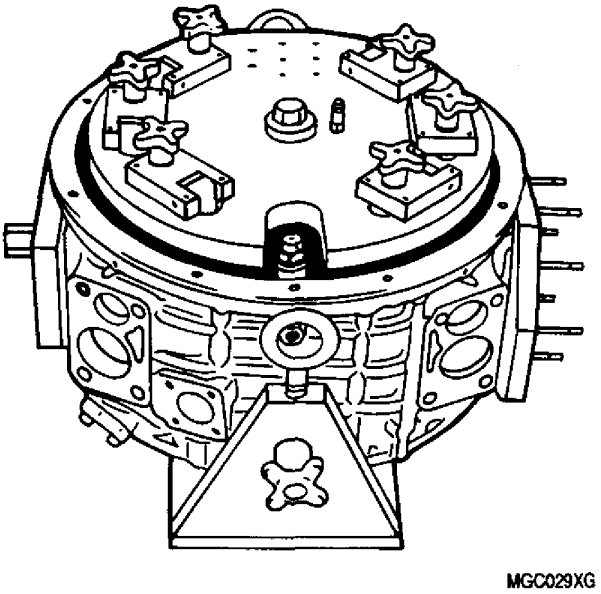

Figure 20. Air Inlet Pneumatic Testing Fixture Installed

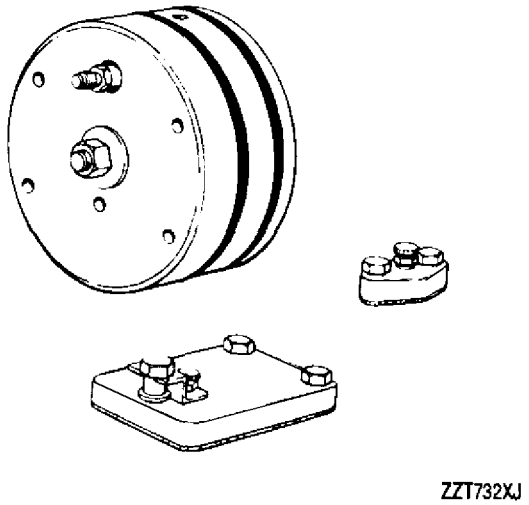

Figure 21. 6796985 Hydraulic Pressure Test Fixture

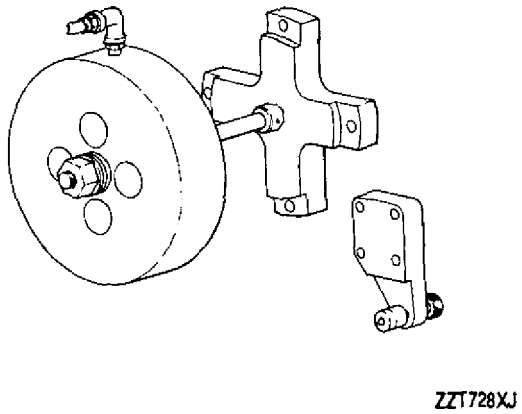

Figure 22. 6799597 Pressure Test Fixture

DEPOT MAINTENANCE

INSPECTION AND REPAIR

COMPRESSOR FRONT BEARING LABYRINTH SEAL ASSEMBLY

Reference Material

None

Alphabetical Index

Subject **Page No.**

Compressor Front Labyrinth Seal Assembly 2
Babbitt Lining Replacement 3
Inspection 2
Repair 2
Introduction 2

Record of Applicable Technical Directives

None

1. **INTRODUCTION.**

2. This work package (WP) provides the instructions for inspection and repair of the compressor front bearing labyrinth seal assembly used on the T56−A−427 turboprop engine.

3. **COMPRESSOR FRONT LABYRINTH SEAL ASSEMBLY.**

4. COMPRESSOR FRONT BEARING LABYRINTH SEAL ASSEMBLY − INSPECTION.

Support Equipment Required

Part No./Type Designation	Nomenclature
6799630	Fixture, checking, labyrinth seal, compressor front

a. Refer to tables 1 through 4 and figure 1 for compressor front labyrinth seal assembly inspection limits.

5. COMPRESSOR FRONT BEARING LABYRINTH SEAL ASSEMBLY − REPAIR.

a. Repair compressor front bearing labyrinth seal assembly. Refer to Disposition columns, tables 1 through 4.

b. Replace parts not within serviceable limits after repair.

Table 1. Compressor Front Bearing Labyrinth Seal Stator Assembly − Inspection and Repair

Condition	Serviceable Limits	Repairable Limits	Disposition
Worn seal diameters (solder lining): Use the detail −201, −202, −203, and −206 subassemblies of 6799630 checking fixture to inspect seal diameters (figures 2 and 3).	0.005 in. max wear.	Exceeds serviceable limit	Reline and resize seal diameters per paragraph 6, this WP.

Table 2. Compressor Front Bearing Labyrinth Seal Stator Assembly − Acceptable Solder Lining Imperfection Limits

Type	Direction	Max. Depth (in.)	Max. Length (in.)	Max Width (in.)	Number Per Quadrant
Light surface marring.	Any	0.0002	No Limit	No Limit	No Limit
Small pit.	——	0.015	0.010	0.010	20
Large pit or void.	——	0.015	0.050	0.050	5
Nick or dent.	Circumferential	0.015	0.100	0.030	2
Edge break.	Circumferential	0.015	360°	0.030	No Limit

Table 3. Compressor Front Bearing Labyrinth Seal Inner Rotor − Inspection and Repair

Condition	Serviceable Limits	Repairable Limits	Disposition
Seal knife wear: Use the detail −201, −202, and −205 subassemblies of 6799630 checking fixture to inspect seal knife diameters (figures 2 and 4).	2.838 in. min. OD.	Not repairable.	Remove rough edges by blending.

Table 4. Compressor Front Bearing Labyrinth Seal Outer Rotor − Inspection and Repair

Condition	Serviceable Limits	Repairable Limits	Disposition
Seal knife wear: Use the detail −201, −202, and −204 subassemblies of 6799630 checking fixture to inspect seal knife diameters (figures 2 and 5).			
ID seal.	2.973 in. max ID.	Not repairable.	Remove rough edges by blending.
OD seal.	3.488 in. min OD.	Not repairable.	Remove rough edges by blending.

6. COMPRESSOR FRONT BEARING LABYRINTH SEAL STATOR ASSEMBLY − BABBITT LINING REPLACEMENT.

Support Equipment Required

Part No./Type Designation	Nomenclature
6799616	Fixture, solder−pouring, labyrinth seal assembly, compressor front
6799617	Fixture, tinning, labyrinth seal assembly, compressor front
6799618	Fixture, machining, labyrinth seal assembly, compressor front
——	Brush, cleaning (Rifle Bore)
——	Torch, hand (or equivalent)

Materials Required

Specification No./Part No.	Nomenclature
AMS 4750	Solder, Tin Lead
MIL−C−85043	Cloth, lint free
No. 121	Flux, liquid
O−A−51	Acetone
ASTM D740	Solvent, cleaning, Methyl Ethyl Ketone
——	Bead, glass
——	Babbitt
——	Rope, fire resistant (or equivalent)

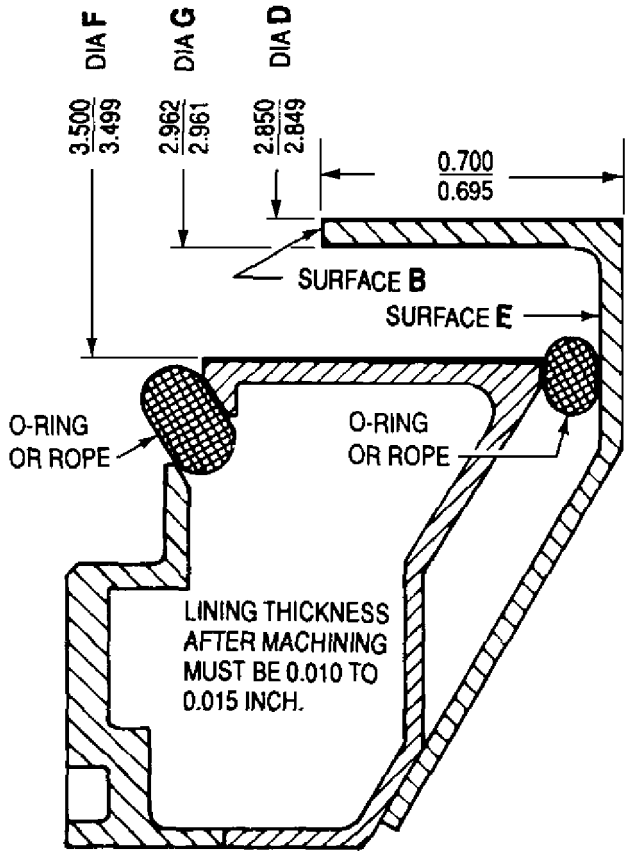

Figure 1. Compressor Front Labyrinth Seal Stator Assembly Lining Limits

WARNING

Cleaning solvent ASTM D740 is flammable and toxic. Do not use near open flame or sparks. Use only in well ventilated areas. Do not allow contact with skin or eyes. Use rubber gloves and goggles or faceshield for protection.

a. Thoroughly clean part in ASTM D740 solvent.

b. Remove old lining (lead solder) as follows:

(1) Set up torch; heat solder and scrape from seal.

(2) Use a locally fabricated hook type tool to clean and debur Surface E (figure 1) and passageway area.

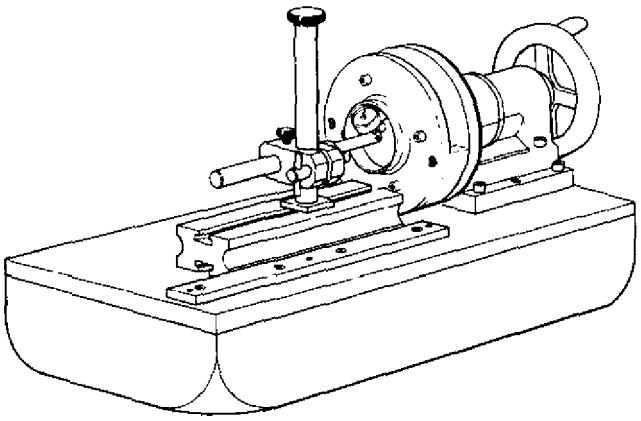

Figure 2. 6799630 Compressor Rotor Labyrinth Seal Checking Fixture (Front)

(3) Clean out any solder remaining in seal by glass bead peening. Use a rifle bore type cleaning brush to clean and roughen Diameters D, G, and F.

c. Score surfaces to be lined by machining using a thread feed of 6 threads per in. with a pitch and depth not exceeding 0.005 in.

CAUTION

Be sure that all surfaces are free from grease and oil. Babbitt will not bond if the surfaces are not grease free.

d. Vapor degrease seal.

e. Seal off the bottom of the OD seal surface with a clean fire resistant rope or approved equivalent forming a sealed cavity between seal surfaces (figure 1).

f. Clean the seal surface to be lined by wiping with a clean, lint free cloth dampened with acetone.

g. Install seal in 6799617 tinning fixture (figure 6). Flux and tin the three sealing surfaces as follows:

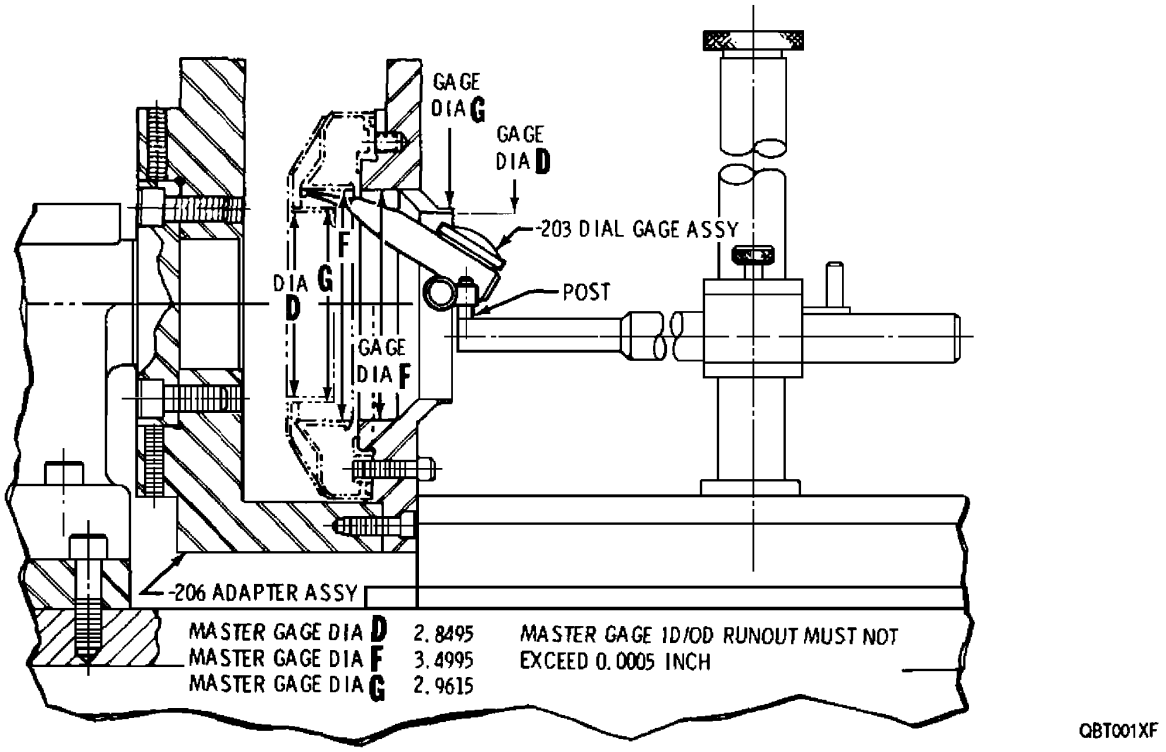

Figure 3. Compressor Front Labyrinth Seal Stator Diameters Check with 6799630 Fixture

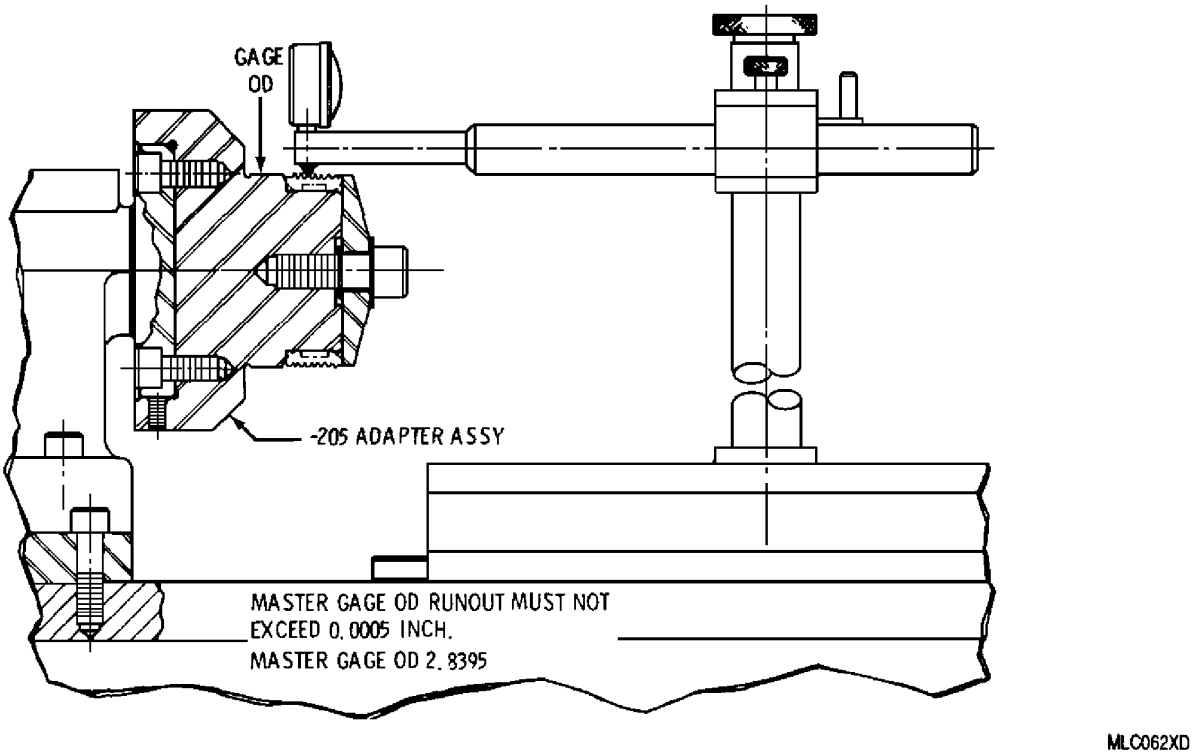

Figure 4. Compressor Front Labyrinth Seal Inner Rotor Diameter Check with 6799630 Fixture

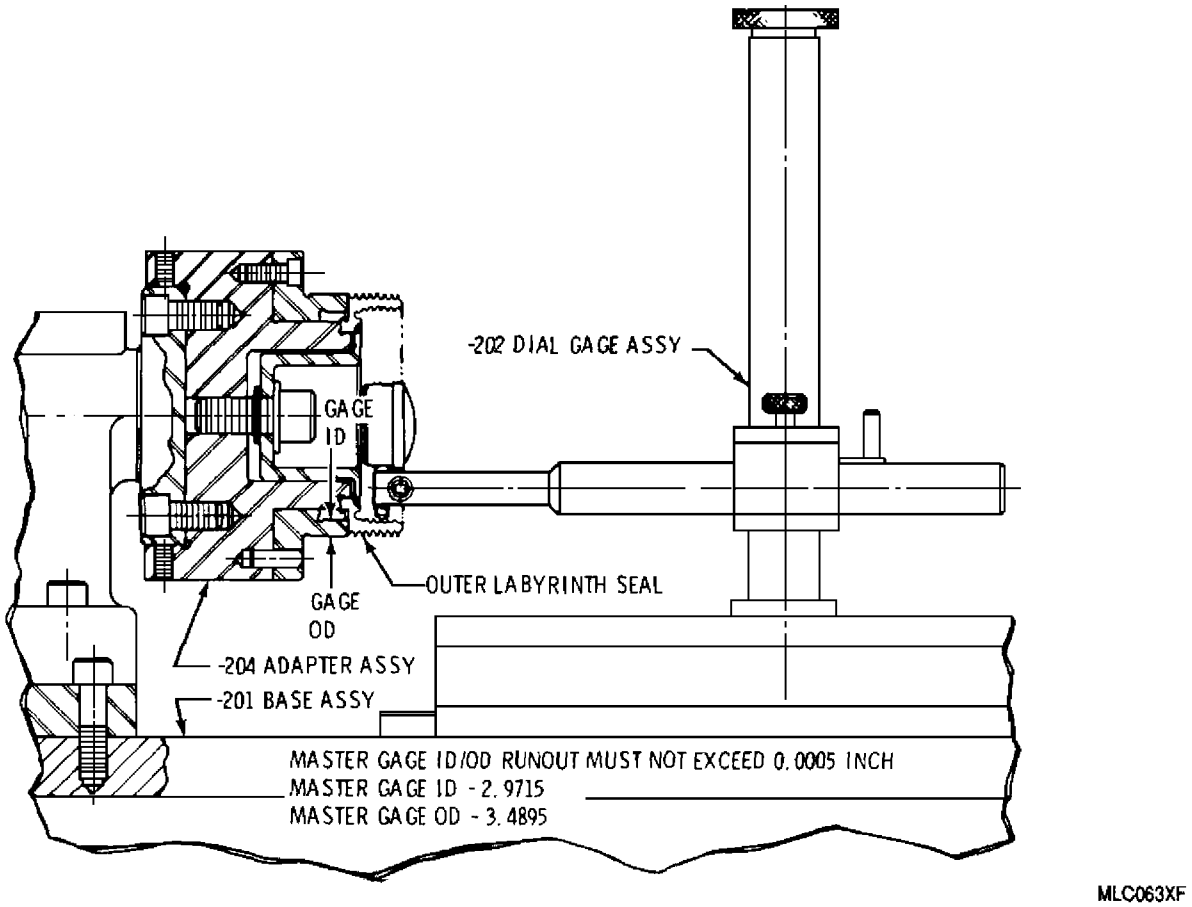

Figure 5. Compressor Front Labyrinth Seal Outer Rotor Diameter Check with 6799630 Fixture

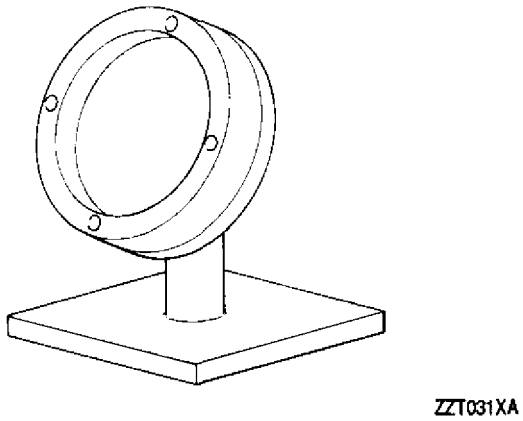

Figure 6. 6799617 Compressor Front Labyrinth Seal Assembly Tinning Fixture

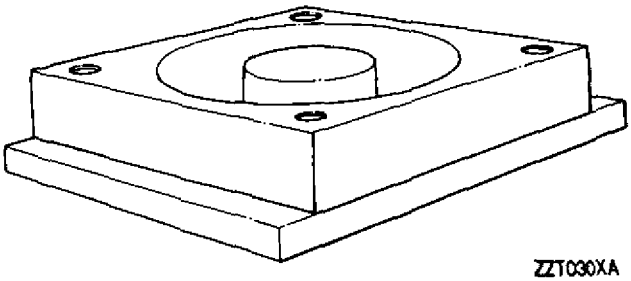

Figure 7. 6799616 Compressor Front Labyrinth Seal Assembly Solder Pouring Fixture

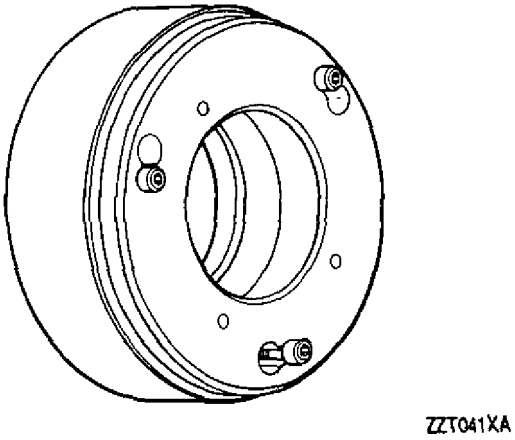

Figure 8. 6799618 Compressor Front Labyrinth Seal Assembly Machining Fixture

WARNING

Heated parts will cause skin damage (burns). Use clean insulated gloves to handle parts.

(1) Place seal assembly in a 740−760°F (393−405°C) oven for at least 10 minutes as needed to bring the part up to this temperature.

(2) Remove the seal assembly from the oven and quickly flux the seal surfaces by brush applying liquid flux, No. 121 on all surfaces to be tinned and heating with a hand torch, or equivalent heating media.

(3) Tin the surfaces with AMS 4750 solder while heating with a hand torch or or equivalent heating media. Allow assembly to air cool.

Compressed Air **56**

(4) Wash flux from seal with water. Use shop air, free from water and oil, to dry seal.

h. Install part into 6799616 pouring fixture (figure 7).

i. Place part installed in 6799616 fixture into oven that has been preheated to 675−725°F (356−386°C). Heat part for at least ten minutes.

NOTE

The babbitt used in the repair procedure below shall conform in composition to the percentages listed in table 5 by weight. Determined by wet chemical methods per ASTM E57 (as defined in AMS 4800).

Table 5. Babbltt Composition

Material	Min	Max
Antimony	4.0	5.000
Copper	4.0	5.000
Lead	−	0.500
Arsenic	−	0.100
Iron	−	0.080
Bismuth	−	0.080
Zinc	−	0.005
Aluminum	−	0.005
Other elements, total	−	0.200
Tin	Remainder	

j. Remove assembly from oven, flux tined surfaces and pour a sufficient amount of melted babbitt into cavities to cover all tinned surfaces. Melted babbitt shall be approximately 700°F (371°C) at the time of pouring and the surface shall be skimmed free of dross just prior to pouring.

k. Cool part slowly to room temperature by turning oven off and leaving door ajar.

l. Remove part from 6799616 fixture. Install seal assembly in 6799618 machining fixture (figure 8) and machine the linings to the limits of figure 1, using the following steps:

(1) Rough machine Diameter D at 375 − 400 rpm.

(2) Rough machine Surface B at 375 − 400 rpm.

(3) Rough machine Diameter F and G at 375 − 400 rpm.

(4) With machine stopped, remove rope or O−ring seals between Surface E and Diameter F with wire hook.

NOTE

Be sure babbitt lining is bonded to the base metal surfaces and has a continuous bond around the edges. Bubbles or voids must not exceed 0.050 in. diameter or constitute more than one percent of the area in any quadrant. See table 2 for acceptable lining imperfections.

(5) Finish machine diameters to limits in figure 1.

DEPOT MAINTENANCE

REMOVAL, INSPECTION, REPAIR AND REPLACEMENT

COMPRESSOR AIR INLET VANE ASSEMBLY

Reference Material

Cleaning and Corrosion Treatment − Standard Practices . . . . . WP 008 00
Magnetic Particle and Fluorescent Penetrant Inspection − Procedures . . . . . WP 017 00
Plating and Surface Treatment of Parts . . . . . WP 018 00

Alphabetical Index

Subject **Page No.**

Compressor Air Inlet Vane Assembly 2
Inspection 2
Loose Vane Repair 4
Repair 2
Vane Replacement 4
Introduction 2

Record of Applicable Technical Directives

None

1. **INTRODUCTION.**

2. This work package (WP) provides the instructions for inspection and repair of the compressor air inlet vane assembly used in the T56−A−427 turboprop engine.

3. **COMPRESSOR AIR INLET VANE ASSEMBLY.**

4. COMPRESSOR AIR INLET VANE ASSEMBLY − INSPECTION.

a. Clean compressor air inlet vane assembly per WP 008 00.

b. Inspect compressor air inlet vane. Refer to table 1.

c. Refer to WP 017 00 for Fluorescent Penetrant Inspection (FPI) procedures.

5. COMPRESSOR AIR INLET VANE ASSEMBLY − REPAIR.

Support Equipment Required

Part No./Type Designation	Nomenclature
6799669	Pliers, vane trailing edge forming

a. Repair compressor air inlet vane. Refer to Disposition column, table 1.

b. Replace air inlet vane not within serviceable limits after repair.

c. FPI all reworked and repaired vane assemblies. Refer to WP 017 00 for FPI procedures.

Table 1. Compressor Air Inlet Vane Assembly − Inspection and Repair

Condition	Serviceable Limits	Repairable Limits	Disposition
Nicks, cracks or tears from trailing edges of vanes.	None.	0.060 in. or less is cause for repair.	Rework by blending. Replace if repairable limit is exceeded.
Surface roughness or erosion on vanes.	Acceptable if basic contour is not changed.	Not repairable.	Condemn vane assemblies exceeding serviceable limits.
Dents (vanes): Leading edge.	0.020 in. max depth.	Not repairable.	Condemn vane assemblies exceeding serviceable limits.
Side of vane.	0.030 in. max depth.	Not repairable.	Condemn vane assemblies exceeding serviceable limits.
Bent vane (cross−section of airfoil not distorted, all dimensions at OD of outerband in area of bent vane are the same radius as undamaged areas, and all braze joints shall be sound).	Displacement relative to ends not to exceed 0.12 in.	Not repairable.	Condemn vane assemblies exceeding serviceable limits.
Blade tip rub on ID of outer band.	Minimum band thickness of 0.049 in.	Do not exceed serviceable limits.	Polish out all sharp edges and raised metal (treat reworked areas per WP 018 00).
Loose vanes.	No looseness acceptable.	Exceeds serviceable limits.	Repair per paragraph 6, this WP.

Table 1. Compressor Air Inlet Vane Assembly − Inspection and Repair (contd)

Condition	Serviceable Limits	Repairable Limits	Disposition
Corrosion on inner or outer band.	Maximum pit depth of 0.030 in.	Do not exceed serviceable limits.	Clean up pits within serviceable limits and treat all reworked areas per WP 018 00. Do not process the assembly all over.
Wear:			
Inner band wear.	Minimum band width of 1.250 in.	Not repairable.	Condemn vane assemblies exceeding serviceable limits.
Outer band front and rear land diameter at vane edge and midway between vanes.	15.008 − 15.026 in. at vane edge (average of four measurements taken 45° apart). Individual measurements may be 15.000 − 15.034 in. 15.000 − 15.034 in. midway between vanes (average of four measurements taken 45° apart). Individual measurements may be 14.090 − 15.044 in.	Not repairable.	Condemn vane assemblies exceeding serviceable limits.
Inner band−to−outer-band axial offset dimension.	0.380 − 0.410 in. as measured from leading edge of bands.	Not repairable.	Condemn vane assemblies exceeding serviceable limits.
Cracks:			
Across the inner and outer band horizontally.	Not serviceable.	Not repairable.	Condemn vane assemblies exceeding serviceable limits.
Inner band vertical flanges.	Does not exceed the full depth.	Not repairable.	Condemn vane assemblies exceeding serviceable limits.
Inner and outer band between vanes (circumferentially).	One crack between vanes affecting no more than three adjacent vanes; two such conditions permitted per assembly.	Not repairable.	Condemn vane assemblies exceeding serviceable limits.
Inner and outer band at splitline (circumferentially).	Not serviceable.	Not repairable.	Condemn vane assemblies exceeding serviceable limits.
Trailing edge damage.	0.12 in. max depth of damage provided that not more than 0.060 in. is blended from chord width of vane.	Do not exceed serviceable limits.	Straighten vane and blend damage at outer band end only provided that braze joint is not cracked or damaged. Do not blend more than 0.060 in. from chord width of vane. Straightening and blending within 0.100 in. of braze fillet at inner band end of vane not permitted.

6. COMPRESSOR AIR INLET VANE ASSEMBLY − LOOSE VANE REPAIR.

Materials Required

Specification No./Part No.	Nomenclature
AMS 5782	Wire, welding

a. Serviceable vanes that are loose can be tightened as follows:

(1) Tighten vane by peening the tang. Tang must be of sufficient size to ensure vane tightness.

(2) It may be necessary to add a small weld bead to the tang to provide sufficient material for peening. Use inert gas tungsten arc weld method and AMS 5782 welding wire, 0.045 in. diameter.

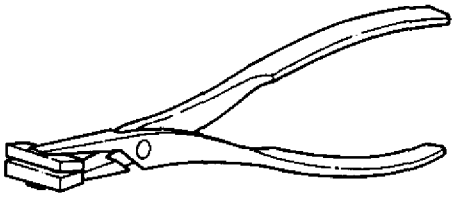

Figure 1. 6799669 Vane Trailing Edge Forming Tool

b. After repair, ensure that all air passages are open.

7. COMPRESSOR AIR INLET VANE ASSEMBLY − VANE REPLACEMENT.

a. Procedure to be determined.

DEPOT MAINTENANCE

INSPECTION AND REPAIR

COMPRESSOR CASE

Reference Material

Cleaning and Corrosion Treatment − Standard Practices . . . . . WP 008 00
Plating and Surface Treatment of Parts . . . . . WP 018 00
General Purpose Nickel Plating . . . . . AMS 2403
Low Phosphorous Electroless Nickel Plating . . . . . AMS 2405
Hard Deposit Chromium Plating . . . . . AMS 2406

Alphabetical Index

Subject **Page No.**

Compressor Case 2
Front Flange Face Repair 5
Inspection 2
Machining 12
Pilot Diameter Repair 4
Post Machining Measurement 14
Recoating 6
Interior Coating Application 9
Exterior Surface Preparation 6
Interior Surface Preparation 8
Repair 2
Introduction 2

Record of Applicable Technical Directives

None

1. **INTRODUCTION.**

2. This work package (WP) provides the instructions for inspection and repair of the compressor case used in the T56−A−427 turboprop engine.

3. **COMPRESSOR CASE.**

4. COMPRESSOR CASE − INSPECTION.

Support Equipment Required

Part No./Type Designation	Nomenclature
Fabricate locally	Pilot ring, front (OD 15.5800 in. absolute)
Fabricate locally	Pilot ring, rear (OD 15.1390 in. absolute)

a. Clean compressor case per WP 008 00.

b. Assemble compressor case halves and install and torque slave splitline hardware in splitlines per figure 1, except leave two bolts at each end fingertight to allow pilot ring installation. Use 1/4 x 1.000 in. bolts and 1/4 in. nuts for slave splitline hardware.

c. Install pilot rings in front and rear pilot diameters and torque remaining slave splitline bolts.

d. Visually inspect compressor case for serviceable and repairable limits as shown in table 1.

5. COMPRESSOR CASE − REPAIR.

Materials Required

Specification No./Part No.	Nomenclature
AMS 5776	Wire, welding

a. Repair compressor cases that fail inspection. Refer to Disposition column, table 1.

b. Replace compressor case not within serviceable limits after repair.

Table 1. Compressor Case − Inspection and Repair

Condition	Serviceable Limits	Repairable Limits	Disposition
Front and rear pilot diameters out−of−round and oversize.	Max out−of−roundness of 0.010 in. (average of four ID measurements 45° apart). All measurements performed with case in a free state, as measured after assembly of case halves. Max front pilot ID of 15.5825 in. Max rear pilot ID of 15.1415 in.	Exceeds serviceable limits.	Repair pilot diameters per paragraph 6, this WP.
Chipped metal spray repair of front and rear pilot diameters.	Sections may be missing up to three 3.00 in. in circumferential length provided the adjacent metal spray on each end of the missing sections is not less than 3.00 in. in circumferential length and is securely bonded.	Exceeds serviceable limits.	Repair pilot diameters per paragraph 6, this WP.
Runout of case front flange face.	Max runout of 0.001 in.	Exceeds serviceable limits.	Repair front flange face per paragraph 7, this WP.
Damage to compressor air bleed manifolds valve mounting surface.	Minor damage limited to the outer 50% of surface B (figure 2).	0.130 in. maximum thickness from Surface B to A (figure 2).	Rework Surface B per figure 2.

Table 1. Compressor Case − Inspection and Repair (contd)

Condition	Serviceable Limits	Repairable Limits	Disposition
Concentricity of front and rear pilot diameters.	Front and rear pilot diameters shall be concentric with each other within 0.001 in. FIR.	Exceeds serviceable limits.	Repair front and rear pilot diameters per paragraph 6, this WP.
Damage to case interior coating.	Max of 10% of total area of lining chipped off on stages one through eight. Max of 5% of total area of lining chipped off on stages nine through fourteen.	Any damage exceeding serviceable limits.	Recoat cases per paragraph 8, this WP, and machine coating per paragraph 12, this WP. Inspect after machining per paragraph 13, this WP.
Foreign object damage to parent metal of case ID.	Nicks and dents not producing exterior bulges.	Exceeds serviceable limits.	Blend to remove metal pickup and sharp edges.
Damage to case splitline surface.	Nicks, dents, and scratches acceptable provided damage does not extend across flange and cause air leaks.	Exceeds serviceable limits.	Blend to remove sharp edges.
Damage to finish on OD of cases.	Not serviceable.	Any damage.	Process cases all over except inside diameters, end faces, manifold mounting faces, tapped and reamed holes. Touch−up or refinish with aluminum coating per paragraph 8, this WP.
Blade tip rub.	Minimum thickness of parent metal not less than 0.075 in.	Exceeds serviceable limits.	Blend sharp edges.
Concentricity of blade path linings.	Blade path linings shall be concentric with front and rear pilot IDs within 0.002 in. FIR.	Exceeds serviceable limits.	Repair pilot diameters per paragraph 6, this WP, recoat case per paragraph 8, this WP, and machine case per paragraph 12, this WP. Inspect after machining per paragraph 13, this WP.

Table 1. Compressor Case − Inspection and Repair (contd)

Condition	Serviceable Limits	Repairable Limits	Disposition
Blade path lining wear.	Blade path lining max ID shall be as listed below for each stage (average of four IDs 45° apart measured at a distance equal to Dimension J forward of rear flange face); however, the average ID of all stages combined shall not exceed 14.6999 in.	Exceeds serviceable limits.	Recoat case per paragraph 8, this WP, and machine per paragraph 12, this WP. Inspect after machining per paragraph 13, this WP.

Stage	Max ID (in.)	Basic Dim. J (in.)
1	15.0000	22.2793
2	14.9307	19.8836
3	14.8666	17.6918
4	14.8052	15.5716
5	14.7539	13.8106
6	14.6983	11.8984
7	14.6564	10.4459
8	14.6172	9.1019
9	14.5860	7.799
10	14.5920	6.580
11	14.5860	4.979
12	14.5860	3.733
13	14.5860	2.524
14	14.5860	1.370

6. COMPRESSOR CASE − PILOT DIAMETER REPAIR.

Materials Required

Specification No./Part No.	Nomenclature
TT−T−291	Mineral spirits

NOTE

During machining operations, case halves shall be assembled and have slave splitline bolts and nuts installed and torqued to limits in figure 1.

a. Machine case diameters to the following dimensions:

(1) Front pilot ID: 15.597 − 15.600 in.

(2) Rear pilot ID: 15.156 − 15.162 in.

Paint Thinner TT−T−291 **8**

b. Clean pilot diameters using TT−T−291 mineral spirits.

c. Plate pilot diameters using any one of the following three methods:

(1) Chrome plate per AMS 2406.

(2) Nickel plate per AMS 2403.

(3) Nickel plate per AMS 2405.

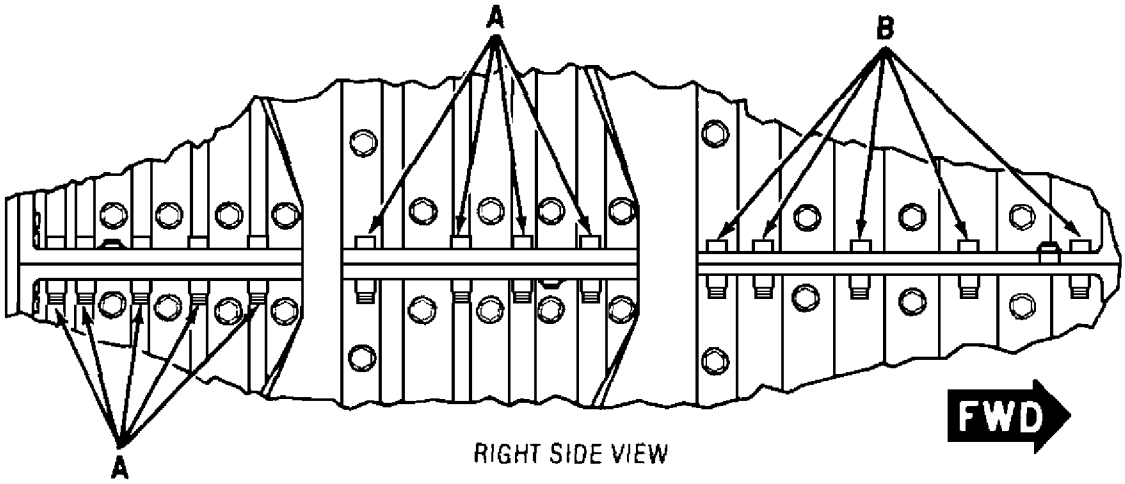

SLAVE SPLITLINE HARDWARE TORQUING

LETTER	TORQUE VALUE
A	150 – 160 LB IN.
B	80 – 90 LB IN.

MLC081XE

Figure 1. Compressor Case Splitline Bolt Torques

d. Machine plated pilot diameters to the following dimensions:

(1) Front pilot ID: 15.579 − 15.581 in. average.

(2) Rear pilot ID: 15.138 − 15.140 in. average.

e. Front and rear pilot diameters may be out−of round a maximum of 0.010 in. FIR provided average diameters are within specified range, as measured in an assembled state.

7. COMPRESSOR CASE − FRONT FLANGE FACE REPAIR.

Materials Required

Specification No./Part No.	Nomenclature
TT−T−291	Mineral spirits
Metco 404 and Metco Sprasteel LS	Spray, metal (CAGE 39918)

NOTE

During machining operations, case shall have slave splitline bolts and nuts installed and torqued per figure 1.

a. Machine front flange face to an overall case length of 22.975 − 22.981 in.

Paint Thinner TT−T−291 **8**

b. Clean front flange using mineral spirits.

c. Metal spray case front flange face with Metco 404 coating, having agent and spray on overlay of Metco Sprasteel LS.

d. Machine metal sprayed front flange face to a case length of 22.985 − 22.991 in.

e. Front and rear flange faces must be square with axis established by front and rear pilot diameters within 0.001 in. FIR.

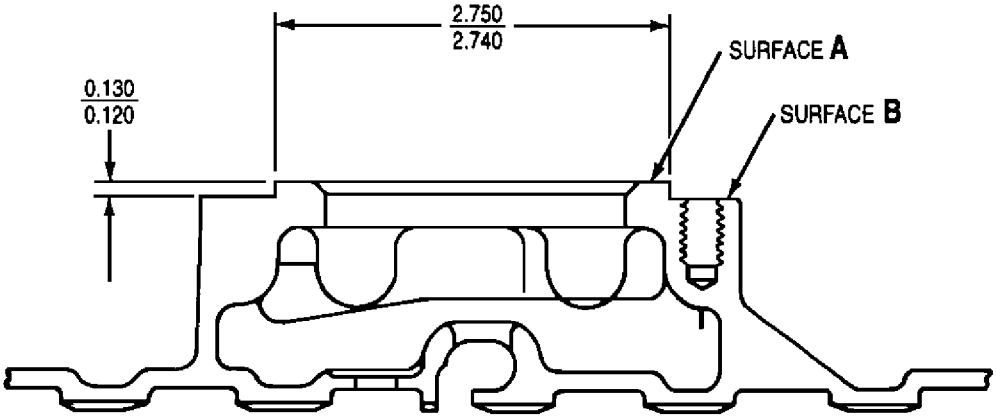

NOTES:

1. GRIND OR LAP A MINIMUM AMOUNT OF MATERIAL FROM SURFACE B TO REMOVE PITS OR OTHER DAMAGE, NOT TO EXCEED MAXIMUM DIMENSION.
2. SURFACE A TO BE FLAT WITHIN 0.0005 IN.
3. SURFACE A AND B TO BE PARALLEL WITHIN 0.003 IN.

Figure 2. Compressor Air Bleed Manifold Valve Flange Repair

8. COMPRESSOR CASE − RECOATING.

9. Exterior Surface Preparation.

Support Equipment Required

Part No./Type Designation	Nomenclature
Fabricate locally	Jack screws
23034315	Spacer ring, fixture holding, grit blast
23034316	Spacer, grit blast
23034317	Adapter, grit blast
23034320	Support plate (3)
6796647	Machine, grit blast
——	Brush, wire

Materials Required

Specification No./Part No.	Nomenclature
MIL−T−81533	Trichloroethane, 1,1,1
3M	Tape, plating (Scotch Brand)
——	Grit,aluminum oxide (120−400 mesh) (CAGE 39918)
——	Solution, Soda

a. Clean all carbon from the aluminum surfaces with a wire brush.

b. Mask external silver plated hardware using plating tape.

WARNING

Caustic soda is toxic. Use only in well ventilated areas. Do not allow contact with skin or eyes. Use rubber gloves and goggles or faceshield for protection.

c. Submerge the compressor case in a caustic soda bath for approximately 2.5 hours. Use 24 ounces of caustic soda solution per gallon of water with a temperature of 180−200°F (82−93°C). The bath should continue 15 minutes after visible action ceases.

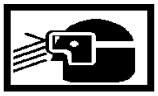

Compressed Air **56**

d. Rinse compressor cases in cold water followed by a rinse in hot water. Dry case using clean, dry, compressed air and remove masking.

e. When compressor case assembly is out−of round in excess of 0.010 in. FIR or shows evidence of horizontal splitline mis−match, rework case as follows:

(1) Install 23034320 support plates (figure 3) in first−, seventh−, and thirteenth−stage vane support recesses.

(2) Install slave splitline bolts and nuts and torque per figure 1.

WARNING

Heated parts will cause skin damage (burns). Use clean, insulated gloves to handle hot parts.

(3) Stress relieve case assembly at 975−1025°F (524−552°C) for 1.75 − 2.25 hours in a controlled oven. Remove case from oven and cool to room temperature.

NOTE

Hold support plates firmly while separating case halves to prevent plates from dropping out.

(4) Remove slave splitline hardware, separate case halves, and remove 23034320 support plates.

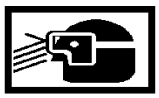

Trichloroethane MIL−T−81533 10

f. Vapor degrease compressor case halves using MIL−T−81533 Trichloroethane for a minimum of 15 minutes.

g. Remove compressor case halves from the degreaser. Bake in oven at 600−650°F (316−349°C) for 1.75 − 2.25 hours.

h. Remove the compressor case halves from the oven and air cool to room temperature.

i. Install 23034316 axial splitline grit blast spacers (figure 4) on case.

j. Install slave splitline bolts and nuts and torque per figure 1.

k. Install 23034317 grit blast adapter (figure 5) on rear face of case assembly.

l. Mask all external studs, tapped holes, and flange faces (front, rear, and bleed valves).

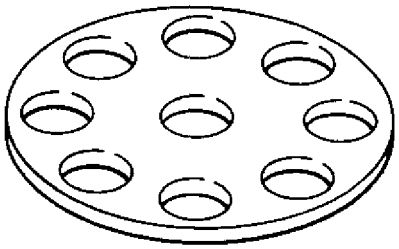

ZZT668XH

Figure 3. 23034320 Support Plate

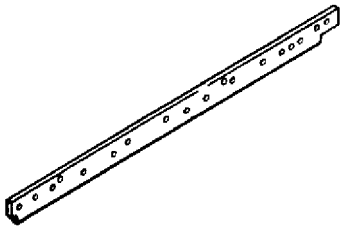

ZZT664XH

Figure 4. 23034316 Grit Blast Spacer

m. Install 23034315 spacer ring (figure 6) on front face of case.

n. Install compressor case assembly on 6796647 grit blast machine (figure 7) in a vertical position.

o. Grit blast the exterior of case using 120−400 mesh aluminum oxide grit with an air pressure of 40−50 psig.

NOTE

The time interval between surface preparation and the application of the aluminum coating shall be kept to a minimum (2 hours or less). If time interval is exceeded re−blast using a reduced pressure of 30 psig.

p. Remove compressor case assembly from grit blast machine and detach 23034317 adapter from rear face of case assembly and remove masking.

Compressed Air **56**

q. Remove any remaining grit blast particles using clean, dry compressed air.

r. Mask all external studs, tapped holes, flange faces, and vane grooves.

NOTE

Case OD must be coated before ID due to higher cure temperature of aluminum coating.

s. Refinish case OD with aluminum coating per WP 018 00.

10. Interior Surface Preparation.

Support Equipment Required

Part No./Type Designation	Nomenclature
23034315	Spacer ring, fixture holding, grit blast
23034316	Spacer, grit blast
23034317	Adapter, grit blast
23037900	Mask, Tenth−Stage bypass groove
23037901	Mask, Fifth−Stage bypass groove
23037919 thru 23037931	Mask, grit blast and metallize, First−throughThirteenth−Stage
6796667	Fixture, holding

Materials Required

Specification No./Part No.	Nomenclature
Metcolite C	Grit, aluminum oxide (No. 24 mesh) (CAGE 39918)
3M	Tape, plating (Scotch Brand)

a. Assemble case halves by installing splitline bolts and torquing per figure 1.

(1) Install 23037919 thru 23037931 vane groove masks with metal side facing the case.

(2) After the vane groove masks have been installed, install the 23037900 and 23037901 fifth− and tenth−stage bleed slot masks.

b. Install 23034317 grit blast lift plate on the rear face of the case assembly.

c. Install 23034315 grit blast fixture adapter ring on the 6796667 compressor case grit blast holding fixture.

d. Install the 6796667 compressor case grit blast holding fixture on the grit blast machine.

e. Install the compressor case assembly on the grit blast machine in the vertical position with the front flange facing down.

NOTE

Bond is usually darker grey in color than the casing and lining material.

f. Grit blast the inner surface using 20−50 mesh aluminum oxide grit with an air pressure of 50−80 psig until bond coat lining is removed.

NOTE

Do not touch or contaminate the grit blasted surfaces. Contamination is generally visible as discoloration or surface roughness. If contamination is observed return case to grit blast machine for additional cycles. Use reduced air pressure on the machine (40−50 psig).

Time between grit blast and preheat shall not exceed 1/2 hour maximum.

g. Remove the compressor case from the grit blast machine and remove 23034317 grit blast lifting plate and vane/bleed manifold masks.

11. Interior Coating Application.

Support Equipment Required

Part No./Type Designation	Nomenclature
Fabricate locally	Jack screws
23034316	Spacer, grit blast
23034322	Ring, spacer, front metallizing adapter
23034323	Adapter, rear metallizing
6796646	Machine, metallizing
6796663	Adapter, metallizing front
6796665	Adapter, metallizing lifting

Materials Required

Specification No./Part No.	Nomenclature
Metco 405 or Metcoloy No. 2	Bonding material (1/8 in. diameter wire) (CAGE 39918)
Metco SF	Spray, aluminum (1/8 in. diameter wire) (CAGE 39918)
Dow Corning 1−2531 or GE SR−6426	Resin, silicone
——	Glue (Franklin liquid hide)
——	Gloves, insulated

a. Assemble case halves with 23034316 splitline spacer installed.

CAUTION

Be sure mask ends are trimmed flush on the splitline surfaces. Masks must not damage coating when removed.

b. Mask all vane grooves with either cork, tape, steel, brass, silastic or other material properly protected against adherence of metal spray coating. Masks are preferably cork and held in position with Franklin liquid hide glue.

c. Install 6796663, 23034322, and 23034323 metallizing adapters (figures 8, 9, and 10) on the front and rear of case assembly.

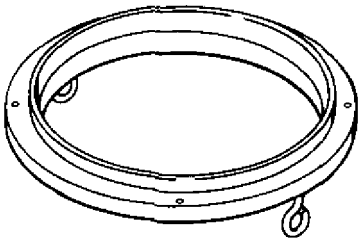

ZZT665XH

Figure 5. 23034317 Grit Blast Adapter

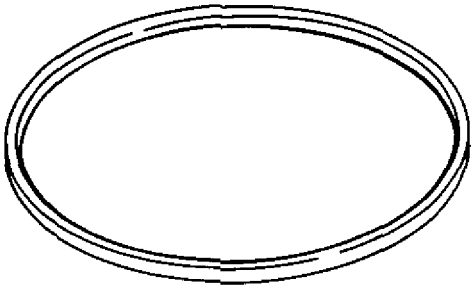

ZZT663XJ

Figure 6. 23034315 Grit Blast Spacer Ring

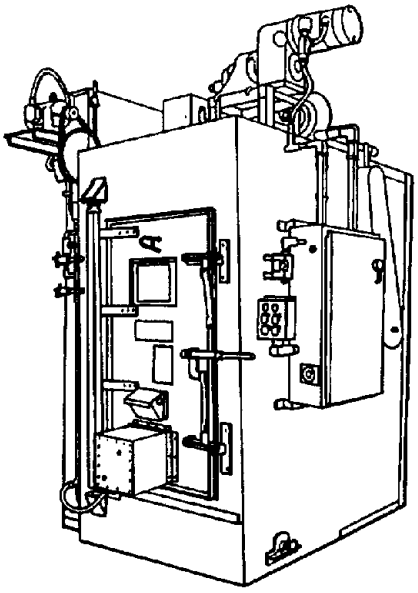

Figure 7. 6796647 Grit Blast Machine

Compressed Air **56**

d. Remove all dust and grit with clean dry compressed air.

WARNING

Heated parts will cause skin damage (burns). Use clean, insulated gloves to handle hot parts.

e. Install 6796665 metallizing lifting adapter (figure 11) on front and rear adapters and position compressor case assembly in an oven. Preheat case assembly 175−205°F (79−96°C). Maintain oven temperature until case assembly is to be metallized.

f. Remove all dust and grit with clean, dry compressed air. This cleaning is to be done during transit of case assembly from oven to metallizing machine.

g. Install the compressor case assembly in 6796646 metallizing machine (figure12).

WARNING

Wear protective clothing during spraying operations. An exhaust system must be in operation at all times while metal spraying to remove over−spray and non−adherent particles.

NOTE

Apply lining material as soon as bonding layer has been applied.

h. Spray the bonding material to a thickness of 0.002 − 0.007 in., using Metco 405 or Metcoloy No. 2, 1/8 in. diameter wire.

i. Spray the aluminum lining 0.030 − 0.040 in., using Metco SF, 1/8 in. diameter wire.

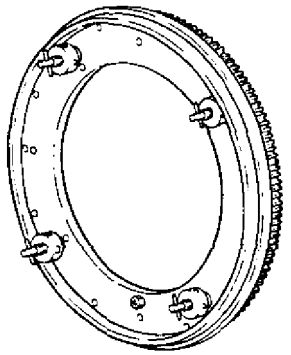

ZZT026XG

Figure 8. 6796663 Metallizing Rear Adapter

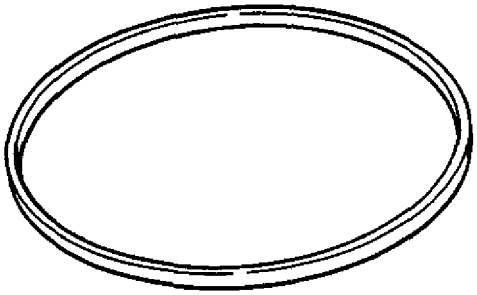

ZZT669XJ

Figure 9. 23034322 Front Metallizing Adapter Spacer Ring

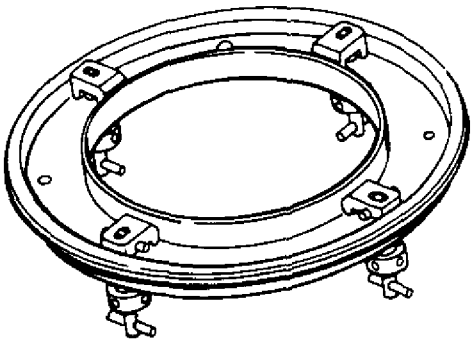

ZZT670XH

Figure 10. 23034323 Rear Metallizing Adapter

j. Remove compressor case assembly from 6796646 metallizing machine. Remove 6796663, 23034322, and 23034323 metallizing adapters from front and rear of case assembly.

CAUTION

Be careful not to damage the coating.

NOTE

Cork masking may require scraping or chipping from case to ensure complete removal. Be sure groove edges and roots are cleaned of all metallizing.

k. Remove all masking, plugs, and stoppers.

NOTE

It is permissible for the aluminum coating to be missing from between, and adjacent to, the fifth−and tenth−stage compressor case bleed holes.

l. If aluminum coating is missing from between, or adjacent to, the fifth− and tenth−stage compressor case bleed holes, blend edges of coating at these locations.

NOTE

Complete resin impregnation has been accomplished if resin is still present on the surface 30 minutes after application.

m. Completely impregnate the aluminum coating with three applications of silicone resin, Dow Corning 1−2531 or General Electric SR−6426. Air dry each coating for 30 minutes.

NOTE

After Aluminum flame spray lining is applied case shall not be heated above 625°F (330°C).

n. Bake the case assembly in the following order:

(1) 150°F (66°C) for 30 minutes.

(2) 450°F (232°C) for one hour.

(3) 625°F (330°C) for three hours.

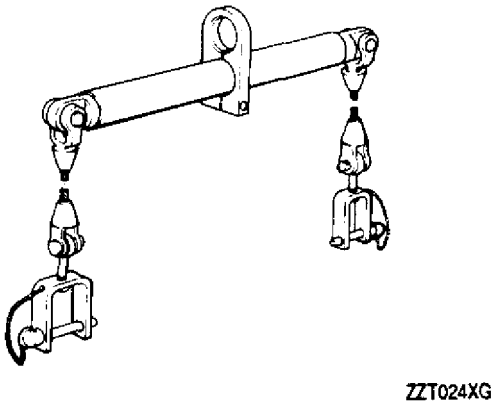

Figure 11. 6796665 Metallizing Lifting Adapter

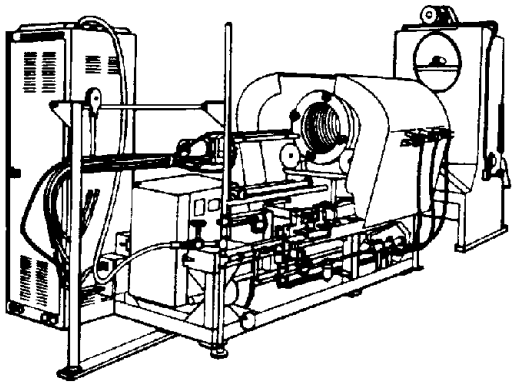

Figure 12. 6796646 Metallizing Machine

CAUTION

Do not “hinge” case halves on dowel pins.

o. Separate case assembly using jack screws and remove 23034316 axial splitline spacers.

p. Clean up any overspray on splitlines by lightly scraping or brushing.

12. COMPRESSOR CASE − MACHINING.

Support Equipment Required

Part No./Type Designation	Nomenclature
Fabricate locally	Pilot ring, front (OD 15.5800 in. absolute)
Fabricate locally	Pilot ring, rear (OD 15.1390 in. absolute)
23034318	Template, machining
23034319	Fixture, machining

Materials Required

Specification No./Part No.	Nomenclature
TT−T−291	Mineral spirits

a. Assemble compressor case halves with slave bolts and nuts and torque per figure 1, except leave two bolts and nuts at end of case fingertight to allow for pilot ring installation. (QA)

b. Locate front pilot ring on vertical lathe. Zero−in front pilot ring to within 0.002 in. FIR.

c. Install assembled case on pilot ring, front flange down.

d. Install rear pilot ring on case rear flange. Torque all remaining slave splitline hardware (figure 1).

e. Recheck zero of front pilot ring (must be within 0.002 in. FIR).

f. Zero−in rear pilot ring to within 0.002 in. FIR. It may be necessary to shim between the face of the case front flange and the front pilot ring in order to achieve the specified runouts. Shim material can be plastic or metallic strips.

NOTE

Recommended maximum depth of cut per pass is 0.010 in. for rough cut and 0.002 in. for finish cut. Cutting surface speed should not exceed 8.5 feet per second.

g. Machine the ID of case assembly to dimensions shown in figure 13 using 23034318 machining template (figure 14) and 23034319 machining fixture (figure 15) (be sure the surface is uniform, free from blisters, chips and other objectionable defects not removable by machining operations).

h. Remove the case assembly from lathe and remove top pilot ring.

i. Remove slave splitline hardware and separate the compressor case halves using jack screws.

CAUTION

Do not chip or otherwise damage blade path lining when removing overspray from vane grooves.

j. Remove any overspray from vane grooves by lightly scraping or brushing. Areas where chipping has occurred must not exhibit any cracking, crazing, or separation of surrounding coating. Any chipping beyond the following limits must be submitted for review.

(1) Individual stages at splitlines−circumferential chipping for each case half not to exceed 0.020 in. (circumferential). Chipping may extend the entire axial length of blade path. Local defects up to 0.040 in. (circumferential) and 0.040 in. axial length are acceptable. Two local defects per end maximum.

(2) Areas outside of splitline−total circumferential chipping of 0.300 in. circumferential x 0.040 in. axial length is acceptable for each case half. No more than four chips (0.300 x 0.040) per entire case assembly.

Paint Thinner TT−T−291 **8**

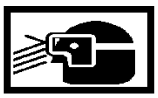

Compressed Air **56**

k. After removal of overspray, clean case exterior and interior using mineral spirits and clean, dry, compressed air.

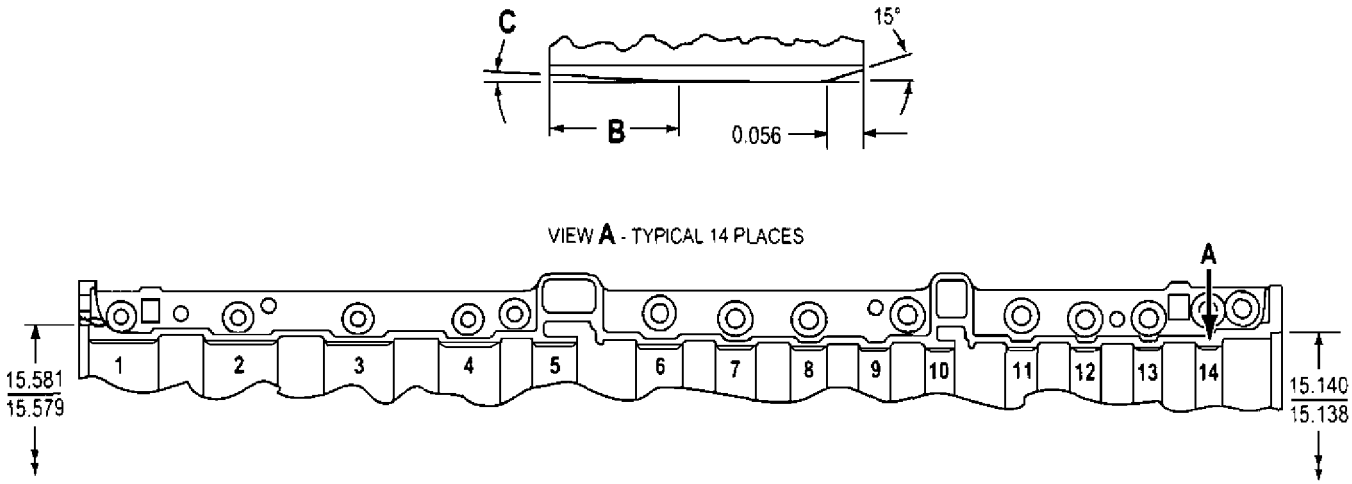

STAGE	BLADE PATH ID (IN.) (AFTER MACHINING)	DIMENSION B (IN.)	ANGLE C
1	14.9840 − 14.9880	0.248 − 0.268	1°45’ − 2°15’
2	14.9147 − 14.9187	0.476 − 0.496	1°45’ − 2°15’
3	14.8506 − 14.8546	0.464 − 0.484	1°45’ − 2°15’
4	14.7892 − 14.7932	0.392 − 0.412	1°45’ − 2°15’
5	14.7379 − 14.7419	0.370 − 0.390	1°45’ − 2°15’
6	14.6823 − 14.6863	0.294 − 0.314	2°45’ − 3°15’
7	14.6404 − 14.6444	0.247 − 0.267	2°45’ − 3°15’
8	14.6012 − 14.6052	0.217 − 0.237	3°30’ − 4°30’
9	14.5700 − 14.5740	0.211 − 0.231	3°30’ − 4°30’
10	14.5760 − 14.5800	0.214 − 0.234	3°30’ − 4°30’
11	14.5700 − 14.5740	0.206 − 0.226	3°30’ − 4°30’
12	14.5700 − 14.5740	0.194 − 0.214	3°30’ − 4°30’
13	14.5700 − 14.5740	0.180 − 0.200	3°30’ − 4°30’
14	14.5700 − 14.5740	0.150 − 0.170	3°30’ − 4°30’

Figure 13. Compressor Case Inner Coating Machine Limits

13. COMPRESSOR CASE − POST MACHINING MEASUREMENT.

Support Equipment Required

Part No./Type Designation	Nomenclature
Fabricate locally	Pilot ring, front (OD 15.5800 in. absolute)
Fabricate locally	Pilot ring, rear (OD 15.1390 in. absolute)

a. Assemble case halves and front and rear pilot rings using all slave splitline hardware. Torque per figure 1. (QA)

b. Measure blade path diameters and verify that they fall within the limits listed in table 2.

Table 2. Blade Path Diameter Limits (After Case Machining)

Stage	Diameter (in.)
1	14.9840 − 14.9880
2	14.9147 − 14.9187
3	14.8506 − 14.8546
4	14.7892 − 14.7932
5	14.7379 − 14.7419
6	14.6823 − 14.6863
7	14.6404 − 14.6444
8	14.6012 − 14.6052
9	14.5700 − 14.5740
10	14.5760 − 14.5800
11	14.5700 − 14.5740
12	14.5700 − 14.5740
13	14.5700 − 14.5740
14	14.5700 − 14.5740

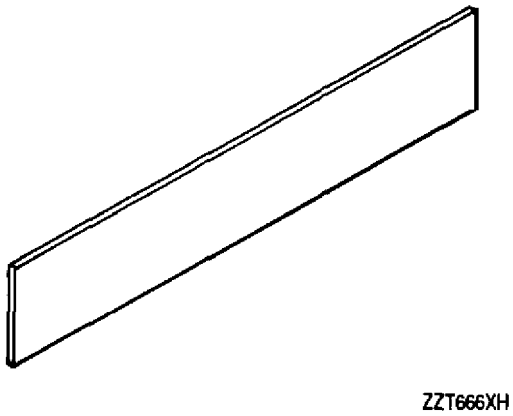

Figure 14. 23034318 Machining Template

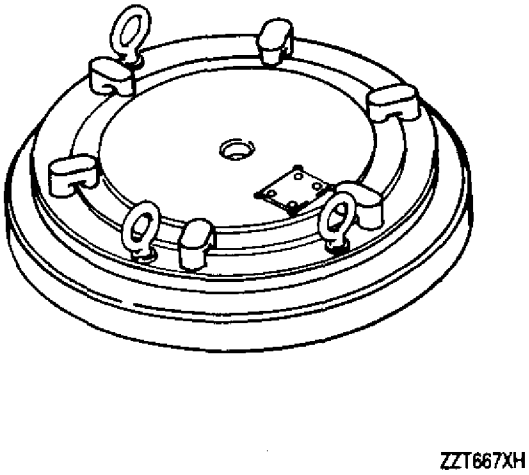

Figure 15. 23034319 Machining Fixture

DEPOT MAINTENANCE

INSPECTION AND REPAIR

BLEED AIR COLLECTORS

Reference Material

Magnetic Particle and Fluorescent Penetrant Inspection − Procedures . . . . . WP 017 00

Alphabetical Index

Subject **Page No.**

Bleed Air Collectors 2
Inspection 2
Repair 2
Introduction 2

Record of Applicable Technical Directives

None

1. **INTRODUCTION.**

2. This work package (WP) provides the instructions for inspection and repair of the compressor bleed air collectors used on the T56−A−427 turboprop engine.

3. **BLEED AIR COLLECTORS.**

4. BLEED AIR COLLECTORS − INSPECTION.

a. Inspect bleed air collectors. Refer to table 1.

b. Refer to WP 017 00 for fluorescent penetrant inspection (FPI) procedures.

5. BLEED AIR COLLECTORS − REPAIR.

Materials Required

Specification No./Part No.	Nomenclature
MIL−R−5031, C1 6 or AMS 5784	Wire, welding
MIL−S−6721, Type Ti or AMS 5512	Sheet, strip, and plate

a. Repair bleed air collectors. Refer to Disposition column, table 1 and the following:

(1) Scribe three lines to mark location of hole slots as shown in figure 1.

(2) Cut out damaged area to 4.00 in. diameter. If all crack indications are not removed, weld cracks and dress smooth with surface.

NOTE

Patch must lay completely flat on mating surface.

(3) Fabricate a repair patch, as shown from 0.020 ± 0.003 in. thick MIL−S−6721 or AMS 5512 metal. Trim patch as required to avoid interference with embossed bead.

(4) Weld patch in position, using MIL−R−5031 or AMS 5784 welding wire. Align holes in patch with scribe lines. Use suitable copper chilling blocks to keep warpage at a minimum. After welding, clean part and inspect for crack indications. Reweld as necessary.

Table 1. Compressor Bleed Air Collectors − Inspection and Repair

Condition	Serviceable Limits	Repairable Limits	Disposition
Dents.	Not Serviceable.	Damage prohibiting proper alignment and installation.	Straighten to original configuration using adequate back−up tools to prevent stretching the metal.
Cracks:			
Welds on metal.	Not Serviceable.	Any crack.	Weld repair using GTAW−MA method and MIL−R−5031 or AMS 5784 welding wire. Do not grind off finish weld unless an obstruction with an adjacent or mating part exists.
Bleed valve mounting area.	Not Serviceable.	Any crack.	Repair per figure 1.

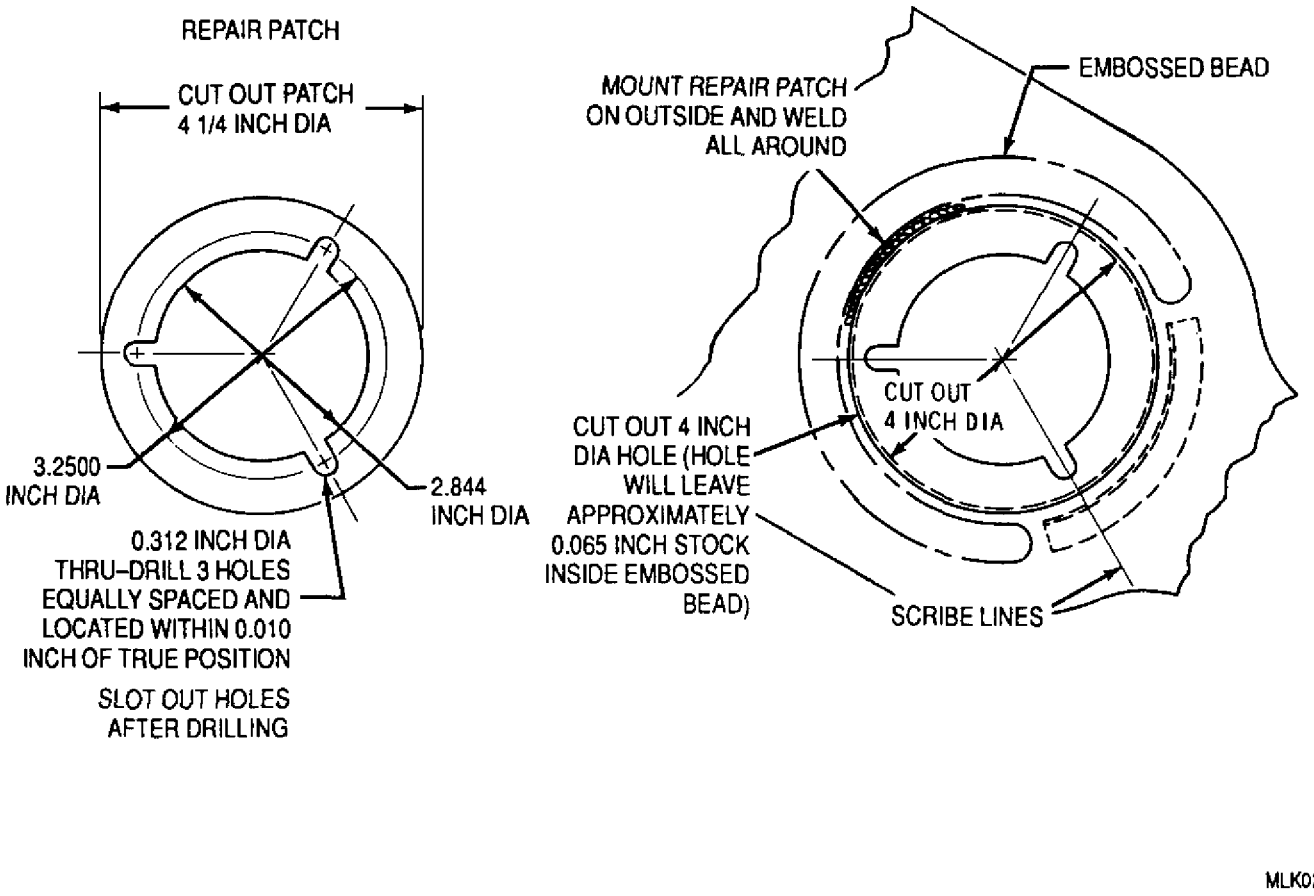

Figure 1. Compressor Bleed Air Collector Weld Repair

DEPOT MAINTENANCE

CLEANING, INSPECTION, AND REPAIR

COMPRESSOR STATOR VANES

Reference Material

Magnetic Particle and Fluorescent Penetrant Inspection – Procedures . . . . . WP 017 00
Plating and Surface Treatment of Parts . . . . . WP 018 00
Compressor Case and Vane Assembly – Assembly . . . . . WP 028 00

Alphabetical Index

Subject **Page No.**

Compressor Stator Vanes 2
Inspection 2
Introduction 2

Record of Applicable Technical Directives

None

1. **INTRODUCTION.**

2. This work package (WP) provides the instructions for cleaning, inspection, and repair of the compressor stator vanes used in the T56-A-427 turboprop engine.

3. **COMPRESSOR STATOR VANES.**

4. COMPRESSOR STATOR VANES - INSPECTION.

a. All compressor stator vanes shall receive new air seals at each overhaul.

DEPOT MAINTENANCE

INSPECTION AND REPAIR

COMPRESSOR ROTOR WHEELS

Reference Material

Cleaning and Corrosion Treatment - Standard Practices . . . . . WP 008 00
Gears - Inspection . . . . . WP 016 00
Magnetic Particle and Fluorescent Penetrant Inspection - Procedures . . . . . WP 017 00
Plating and Surface Treatment of Parts . . . . . WP 018 00
Plating, Chromium, Hard Deposit (QQ-C-320, C1.2) . . . . . AMS 2406
Plating, Nickel, Electroless, Low Phosphorus . . . . . AMS 2405
Shot Peening . . . . . AMS 2430

Alphabetical Index

Subject **Page No.**

Compressor Stator Wheels 2
Corrosion Inspection Limits 6
First-Stage Wheel Shot Peen Repair 10
Fourteenth-Stage Hub Repair 8
Fourteenth-Stage Wheel Repair 6
Plating Repair 9
Inspection 2
Repair 2
Thirteenth-Stage External Spline Inspection 12
Introduction 2

Record of Applicable Technical Directives

None

1. **INTRODUCTION.**

2. This work package (WP) provides the instructions for inspection and repair of the compressor rotor wheels used on the T56-A-427 turboprop engine.

3. **COMPRESSOR ROTOR WHEELS.**

4. COMPRESSOR ROTOR WHEELS - INSPECTION.

Materials Required

Specification No./Part No.	Nomenclature
23004328	Gage, plug
No. 280	Paper, grit abrasive

a. Clean compressor rotor wheels per WP 008 00.

b. Inspect compressor rotor wheels. Refer to table 1.

c. Refer to WP 017 00 for fluorescent penetrant inspection (FPI) procedures.

5. COMPRESSOR ROTOR WHEELS - REPAIR.

a. Repair compressor rotor wheels. Refer to Disposition column, table 1.

b. Replace wheels not within serviceable limits after repair.

Table 1. Compressor Rotor Wheels - Inspection and Repair

Condition	Serviceable Limits	Repairable Limits	Disposition
Cracks, corrosion pits or plating deterioration in First- through Fourteenth-Stage wheels.	Refer to paragraphs 6 and 7, this WP.	All plating cracks.	Refer to paragraph 7, this WP.
FPI indications of First-Stage wheel rim face.	Not serviceable.	Not repairable.	Condemn part exceeding serviceable limits.
FPI indications of First-Stage wheel dovetail slots.	Not serviceable.	Not repairable.	Condemn part exceeding serviceable limits.
FPI indications of wheel stages Two through Thirteen, with particular attention given the inside radii of the dovetail slots.	Not serviceable.	Not repairable.	Condemn part exceeding serviceable limits.
Cracks emanating from balance weight pin holes in rim front face of First-Stage wheel.	Not serviceable.	Not repairable.	Condemn part exceeding serviceable limits.
Fourteenth-Stage wheel permanent set (dish).	0.125 in. minimum.	Dish less than 0.125 in.	Refer to paragraph 7, this WP.
Damage in blade slot area.	Not serviceable.	Not repairable.	Condemn part exceeding serviceable limits.
Wheel corrosion.	Refer to paragraph 6, this WP.	Refer to paragraph 6, this WP.	Refer to paragraph 6, this WP.
Thirteenth-Stage external spline wear.	Minimum spline diameter of 12.8442 in. over 0.054 in. diameter pins.	Spline diameter less than 12.8442 in.	Refer to paragraph 11, this WP.

Table 1. Compressor Rotor Wheels − Inspection and Repair (contd)

Condition	Serviceable Limits	Repairable Limits	Disposition
Groove in wheel spacer OD.	One groove per vane front and rear air seals. Max depth of 0.005 in. or 0.008 in. in any 10° arc.	Remove sharp edges.	Grind or stone sharp edges. Serviceability of wheel is determined by limits in WP 030 00. Discoloration acceptable. Bulges in spacer ID are acceptable providing grooves in spacer OD are within limits.
Metal buildup, wear or grooving on the front face of outer rim (all stages).	No metal buildup or sharp edges acceptable.	Exceeds serviceable limit.	Remove all metal buildup and sharp edges; it is not necessary to remove all signs of wear. The minimum rim width measured in the area of wear for each stage is: First 1.196 Eighth 0.550 Second 1.182 Ninth 0.545 Third 1.172 Tenth 0.543 Fourth 1.164 Eleventh 0.543 Fifth 1.156 Twelfth 0.533 Sixth 0.558 Thirteenth 0.520 Seventh 0.554 Fourteenth 0.500 Inspect repaired area for cracks. When repair requires removal of parent metal, strip plating and replate wheel per paragraph 9, this WP.
Wear on ID of Fifth−Stage and Ninth−Stage wheels.	0.880 in. ID maximum.	0.887 in. ID maximum.	Machine minimum amount necessary to remove wear pattern and restore concentricity. Apply electroless nickel plating, per WP 018 00 to the ID. Finished ID must be 0.877 − 0.876 in.
Obstructed oil hole in the Fourteenth−Stage wheel.	Not serviceable.	Any obstruction of hole.	Clean hole to remove any obstruction.
Legible alignment marks on First− and Second−Stage wheels.	Wheels clearly marked as specified by figure 1.	All serviceable wheels that do not have alignment marks.	Add wheel alignment marks as specified by figure 1.
Wear at Dia D of Fourteenth−Stage wheel (figure 2).	1.5382 in. max dia.	1.5442 in. max dia.	Repair Dia D per figure 2 and paragraph 8, this WP.
Wear on internal threads of Fourteenth−Stage wheel. (Tie bolt threads.)	Check with plug gage 23004328 (figure 3). No−go side of gage must not thread into wheel.	Not repairable.	Condemn wheel exceeding serviceable limits.

Table 1. Compressor Rotor Wheels − Inspection and Repair (contd)

Condition	Serviceable Limits	Repairable Limits	Disposition
First−Stage wheel, scoring or metal buildup at base of hub adjacent to seal shoulder (0.500 in. web thickness).	Metal buildup and scoring up to 0.025 in.	Exceeds serviceable limits.	Remove metal pick up with No. 280 grit abrasive paper or light grinding. Blend scored areas to remove sharp edges and provide a minor radius in the bottom of the score marks.
Worn or damaged First or Fourteenth−Stage Wheel bearing journal.	First−Stage: Maximum: 2.3621 in. Minimum: 2.3612 in. Fourteenth−Stage: Maximum: 2.3620 in. Minimum: 2.3614 in.	Minimum diameter prior to plating. First−Stage: 2.3561 in. Fourteenth−Stage: 2.3517 in.	Machine a minimum amount of metal needed to remove wear. Replate per paragraph 9, step e. Final diameter shall be: First−Stage: 2.3612−2.3621 in. Fourteenth−Stage: 2.3617−2.3620 in.

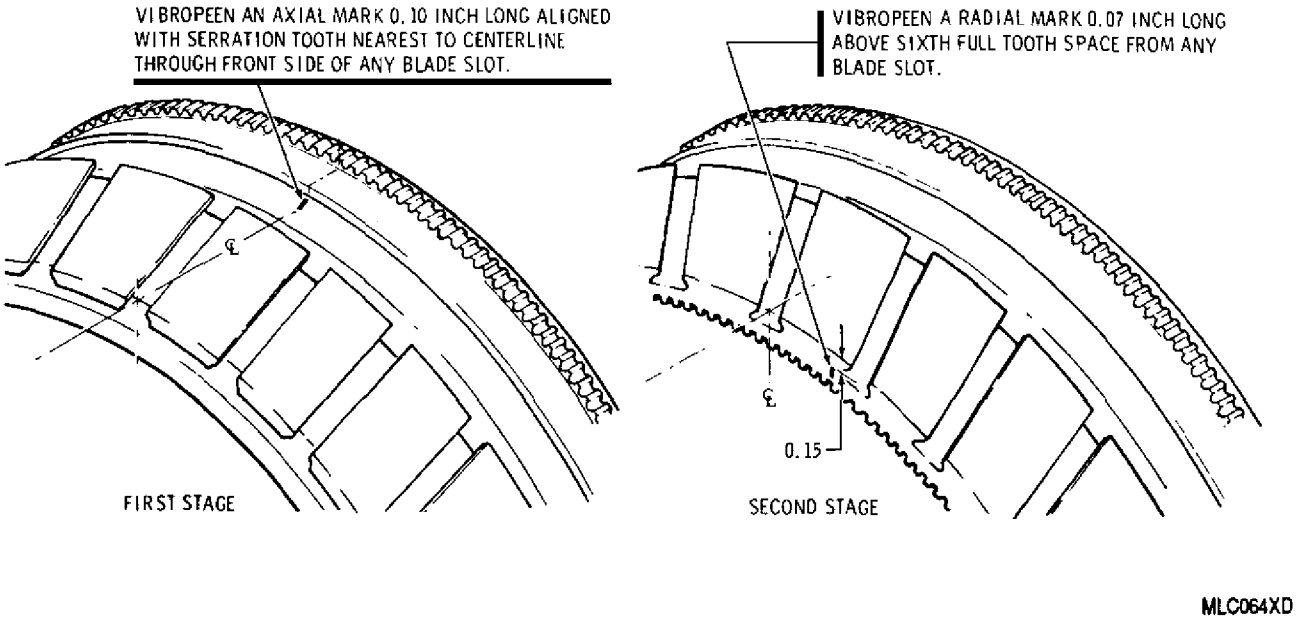

Figure 1. First− and Second−Stage Compressor Wheels Alignment Mark Locations

DIAMETER **A** MUST BE CONCENTRIC WITH DIAMETER **C** WITHIN 0.002 IN.

DIAMETER **D** MUST BE CONCENTRIC WITH DIAMETER **A** WITHIN 0.001 IN.

DIAMETER **D** MUST BE CONCENTRIC WITH DIAMETER **A** WITHIN 0.0005 IN.

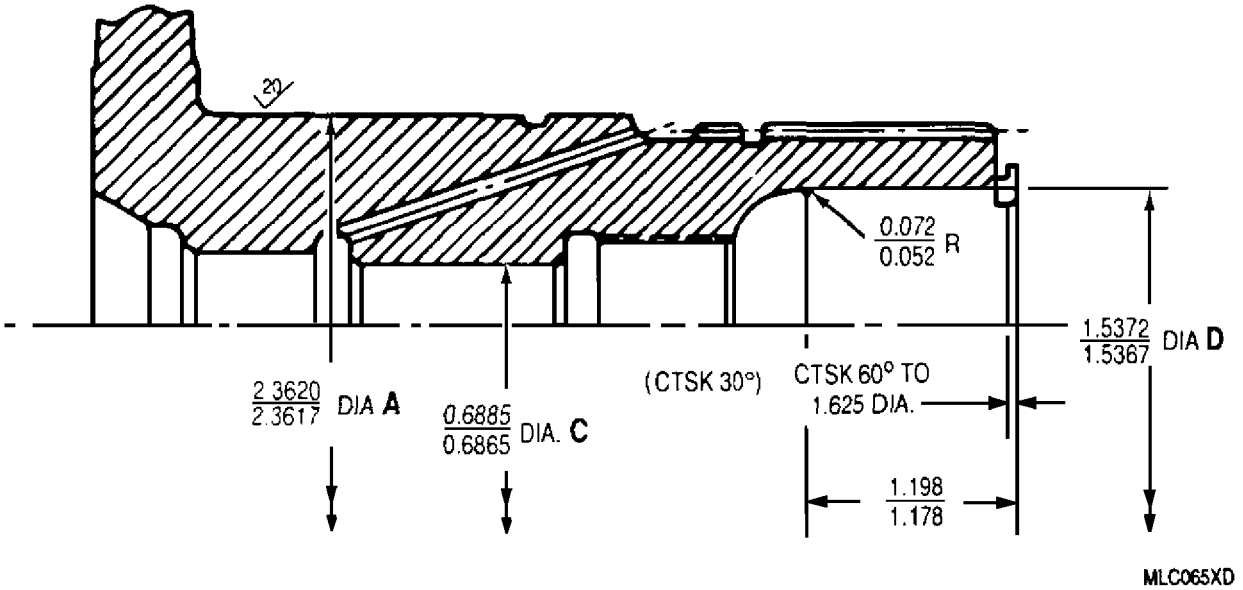

Figure 2. Compressor Fourteenth−Stage Wheel Hub Rework

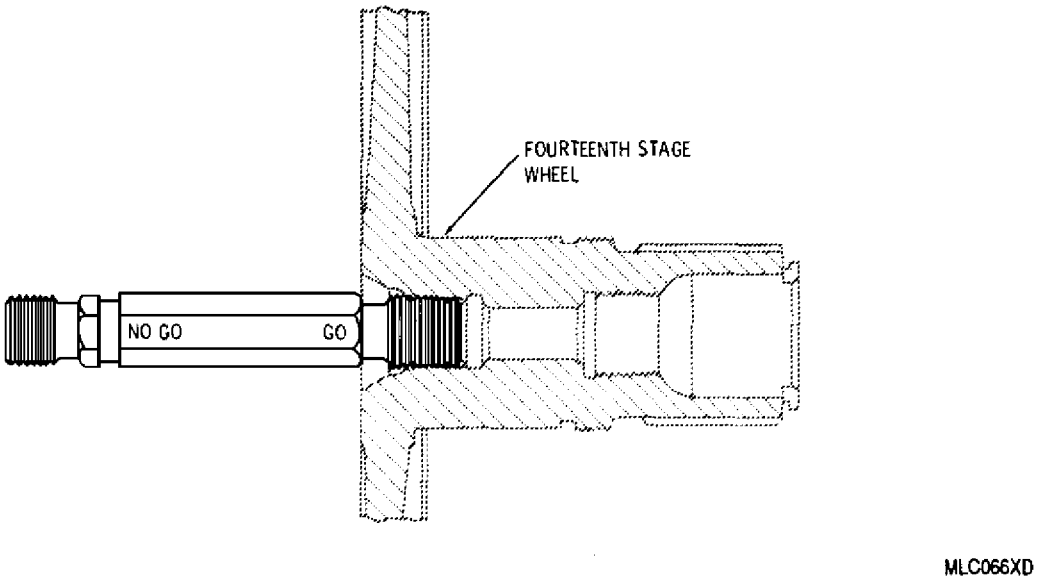

Figure 3. Checking Fourteenth−Stage Wheel Thread Wear with Plug Gage 23004328

6. COMPRESSOR ROTOR WHEELS − CORROSION INSPECTION LIMITS.

Materials Required

Specification No./Part No.	Nomenclature
MIL−G−9954	Glass Beads

NOTE

It is not possible to fully describe corrosion conditions and establish a definite line between acceptable and non−acceptable damage. Some corrosion damage can be sustained without appreciable strength loss. The following limits prevent acceptance of wheels with severe corrosion or indeterminable corrosion damage which might affect wheel strength.

a. Corrosion conditions may be defined in three categories:

(1) Surface Porosity. Surface indentations which are generally larger across the surface than in depth. The inner surface of the pores are readily visible and can be cleaned of most discoloration by vapor blasting.

(2) Corrosion Pits. Voids with considerable depth. The inner surface of the pit is not entirely visible and shows dark areas which cannot be cleaned by vapor blasting. Pits are particularly detrimental since they tend to hold moisture which accelerates additional corrosion in the pitted area. This type of corrosion tends to occur sub−surface and extent of corrosion cannot always be determined by visual examination.

(3) Chainlike Pits. Two or more pits close to or adjacent to each other. These are acceptable if space between pits is greater than one diameter of largest pit.

CAUTION

Nozzle pressure must not exceed 50 psi.

b. If corrosion is evident, clean the wheel by dry blasting with glass beads, MIL−G−9954. Strip plating if necessary.

c. The following conditions are acceptable:

(1) Pits which are larger across the surface than in depth and with pore depth up to 0.015 in. are acceptable in any area of the wheel except in the lower radius and pressure faces of the blade slot (figure 4).

(2) Pits which are smaller across surface than in depth and with pore depths up to 0.015 in. in hub and web section of Fourteenth−Stage wheel, or in the hub and adjacent fillet of interstage wheels are acceptable.

(3) Pits in web and spacer sections of wheels are acceptable providing there are no pits beyond 0.030 in. in depth.

(4) Pits on the face of the wheel which form sharp edges around blade dove tail slots will be blended with a hand stone.

d. The following conditions are not acceptable:

(1) Pits and small pores with depths exceeding 0.015 in. in hub and web section of Fourteenth−Stage wheel, or in the hub and adjacent fillet of interstage wheels, or when pores form chainlike pattern.

(2) Pits in web and spacer sections of wheels which exceed 0.030 in.

7. COMPRESSOR ROTOR WHEELS − FOURTEENTH−STAGE WHEEL REPAIR.

Support Equipment Required

Part No./Type Designation	Nomenclature
Wheelapeen or, Pneumatic air type	Cabinet, shot peening
10X	Magnifier
6796247	Gage, Fourteenth−Stage wheel permanent dish
6796864	Protector, Fourteenth−Stage wheel shot−peen hub
6796865	Protector, Fourteenth−Stage wheel shot−peen rim

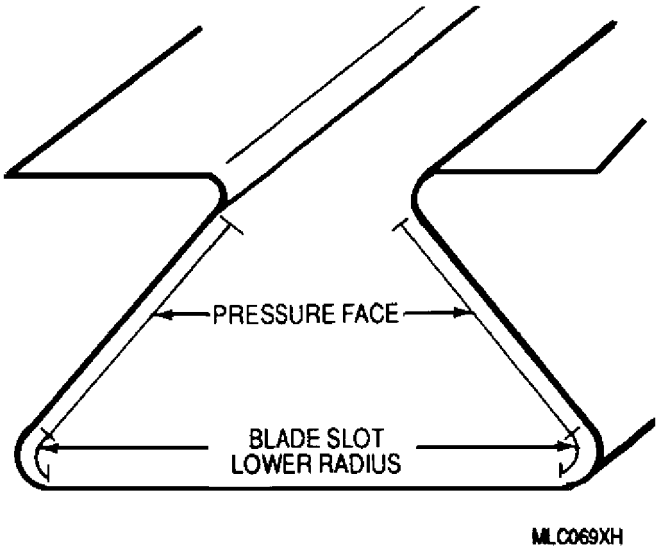

Figure 4. Compressor Wheel Dovetail Slot Corrosion Inspection Areas

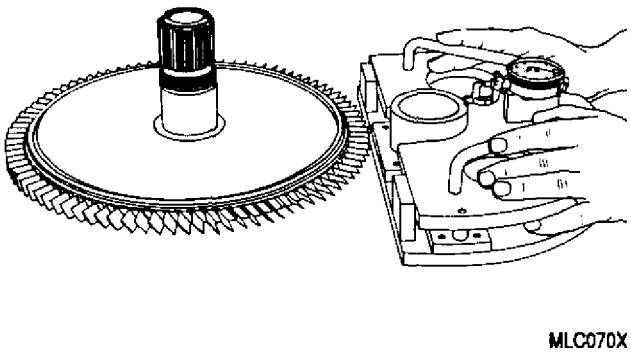

Figure 5. Setting Dial Indicator of 6796247 Fourteenth−Stage Wheel Dish Gage with Master Adapter Ring

Materials Required

Specification No./Part No.	Nomenclature
CW 19 to CW 28	Wire, steel

a. Check the permanent set (dish) of the Fourteenth−Stage wheel as follows:

(1) Place adapter ring of 6796247 Fourteenth−Stage wheel permanent dish gage, on gage block of master plate. Install indicator assembly on master plate to set the indicator. Set indicator to zero. This dimension represents 0.131 in. of dish. Assure gage assembly is certified (figure 5).

(2) Install master adapter ring on wheel hub and position indicator assembly on wheel (figures 6 and 7).

(3) Check and record wheel dish.

b. When the permanent set (dish) of the Fourteenth−Stage wheel is less than 0.125 in., repair as follows:

(1) Remove the plating from the rear face of the wheel web only per paragraph 9, this WP. Removal of plating is evident when the color changes from a brownish to a silvery appearance.

(2) Install 6796864 hub protector and 6796865 rim protector on Fourteenth−Stage wheel (figure 8).

(3) Shot peen the rear face of the web only as follows:

(a) The shot material shall be stabilized, commercial cut steel wire, CW 19 to CW 28.

(b) The shot material shall be stabilized by directing the shot blast against a hardened steel plate at the maximum available intensity. The time necessary to accomplish the stabilizing will vary with intensity. Samples should be checked at sufficient intervals until a 5 gram sample viewed at 10 power magnification shows all of the particles to be free from sharp edges and shearing marks and show tendency to become rounded.

(c) Shot material shall conform to the following specifications:

Composition		Check Analysis Under Min	Check Analysis Over Max
Carbon	0.45−0.75	0.01	0.01
Manganese	0.60−1.20	0.03	0.03
Phosphorus	0.045 max		0.005
Sulphur	0.050		0.005
Silicon	0.10−0.30	0.02	0.02

(d) The shot can be cut from carbon steel wire to a length approximately equal to the wire diameter. Use a wire diameter of 0.019 − 0.028 in. and with a tensile strength of 275,000 − 314,000 psi.

(e) The hardness of the shot particles must have a minimum value of Rockwell C 48.

(f) Shot material must be uniform in quality and temper, clean, smooth, and free from shear cracks, laps, excessive seams or burrs, and other injurious defects consistent with best commercial manufacturing processes.

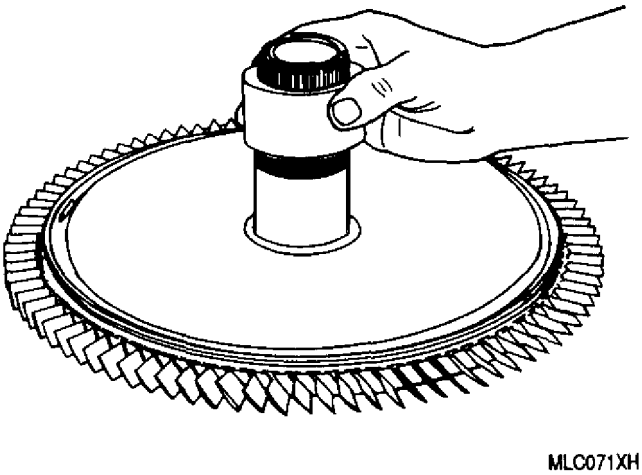

Figure 6. Installing Master Adapter Ring of 6796247 Fourteenth−Stage Wheel Dish Gage

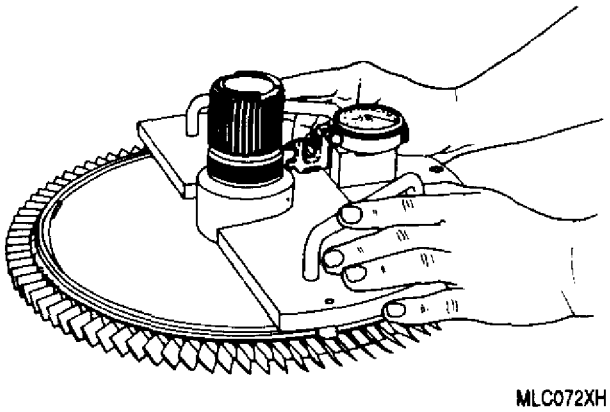

Figure 7. Checking Permanent Dish of Fourteenth−Stage Compressor Wheel

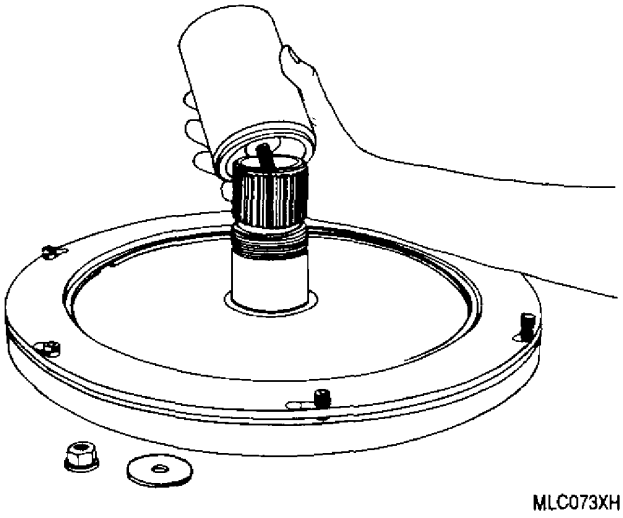

Figure 8. Installing 6796864 Fourteenth−Stage Hub and 6796865 Rim Protectors

(g) A pneumatic air type, or Wheelapeen type shot peening cabinet shall be used.

(h) Parts shall be thoroughly cleaned by vapor degreasing to remove oil, chips, or other objectionable materials.

(i) Surfaces to be peened shall be either in the machined or grit blast cleaned condition. Grit blasted surfaces shall be free of scale.

(j) Appropriate masks shall be used for the protection of surfaces not to be peened.

(k) The peening intensity shall be 10A2−20A2 as determined by AMS 2430.

(l) Each part shall be peened separately and shall be positioned in the machine to obtain good peening uniformity of intensity and coverage on the designated surfaces.

(m) The shot peened surface shall have a fine texture and coverage shall be complete and uniform.

(n) After shot peening, check dish to assure that permanent set of 0.128 − 0.134 in. has been met. If dish has not been met, repeat above shot peening process.

(4) Wet grit blast the shot peened area when the permanent set is 0.128 − 0.134 in.

NOTE

Fourteenth−Stage wheel, Part number 6858624 is unplated and replating is not required.

c. Reapply Alseal 500 or SerMetal W per WP 018 00.

NOTE

Apply paint per WP 018 00 to any area where plating has been removed. Use any locally approved method to determine if plating has been removed.

d. When only the rear face of the wheel has been stripped of plating, wet grit blast the rearface to remove iron oxide. Vapor degrease the wheel and paint the shot peened area per WP 018 00.

8. COMPRESSOR ROTOR WHEELS FOURTEENTH−STAGE HUB REPAIR.

a. Grind Diameter D (figure 2) to remove all signs of wear. Keep material removal to a minimum.

b. Plate Diameter D with chrome per WP 018 00.

c. Finish the ID to dimensions shown. Plating must not exceed a thickness of 0.005 in. after machining.

9. COMPRESSOR ROTOR WHEELS − PLATING REPAIR.

Materials Required

Specification No./Part No.	Nomenclature
O−N−350	Nitric acid (HNO_3)

NOTE

Fourteenth−Stage wheel, part number 6858624, is unplated, and the following instructions do not apply.

a. Wheel assemblies, one through fourteen, which have not been plated or with plating crack indication (after fluorescent penetrant) or with corrosion pits or plating deterioration where parent metal is exposed will be repaired as follows:

NOTE

Be sure no moisture or water is introduced into the acid. This prevents etching the wheel.

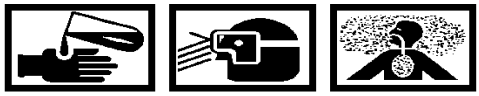

Nitric Acid O−N−350 **62**

(1) Remove the blades and strip all plating from the wheel. Use nitric acid (HNO_3) concentrated in an aluminum or lead lined tank at room temperature.

(2) Fluorescent penetrant inspect the unplated wheel for evidence of cracking of the parent metal. If cracks are found, condemn the wheel.

(3) Wheel assemblies which have visual indications, such as oil streaks (which cannot be detected by fluorescent penetrant inspection), shall be vapor blasted. Mask all blade dovetail slots and bearing surfaces prior to vapor blasting.

NOTE

The vapor blast solution consists of the following ingredients:

Water	12 −15 gal
Wetting Agent	1 − 2 oz
Grit, No. 280 Mesh Carborundum	45 − 50 lb
Air Pressure	100 psi

b. Replate the wheels as follows:

(1) First−Stage wheel (carburized): Electroless nickel plate per WP 018 00. Plating thickness shall be 0.00075 − 0.00200 in. except on wheel ID it may be 0.0003 − 0.0020 in. thick (figure 9). Dimension A (figure 10) must be within limits specified after all processing.

(2) Second− through Thirteenth−Stage wheels: Nickel−cadmium plate wheels all over per WP 018 00. Plating is optional on ID of wheels and Surfaces B and C (figure 10). Dimension A must be within limits specified after all processing.

(a) Wheel ID must be within limits shown below, after processing.

Stage	Limits
First	0.8755 − 0.8775
Second thru Fourth	1.125 − 1.127
Fifth and Ninth	0.876 − 0.877
Sixth thru Eighth and Tenth thru Thirteenth	0.876 − 0.878
Fourteenth	0.6865 − 0.6885

(3) Fourteenth−stage wheel (except part number 6858624): Nickel cadmium plate all over per WP 018 00 except where shown in figure 9. Nickel plate thickness shall be 0.00075 − 0.00200 in. thick. Dimensions A (figure 10) must be within limits specified after all processing.

c. First− and Fourteenth−Stage wheel journal shoulder (hub) and filler area shall be electroless nickel plated, AMS 2405, to a thickness of 0.0001 − 0.0002 in. If wheel hubs, fillet area or shoulders have high concentration of corrosion pitting, they shall be repaired as follows:

NOTE

When a grinding operation causes removal of base metal, inspect for grinding burns per WP 016 00.

(1) Grind minimum amount of stock required to remove defects. The maximum allowable depth is 0.005 in.

(2) After grind, magnetic particle inspect (MPI) per WP 017 00 for evidence of sub−surface indications which may have been caused due to hardening during grind operation.

CAUTION

Do not exceed 325°F (163°C) during stress relief process.

(3) Stress relieve wheels at 300−325°F (149 − 163°C) for one hour prior to cleaning.

(4) Hard chrome plate wheels per QQ−C−320, C1.2.

(5) Grind the wheel hub OD, fillet and thrust shoulder to the wheel drawing specifications.

10. COMPRESSOR ROTOR WHEELS − FIRST−STAGE WHEEL SHOT PEEN REPAIR.

NOTE

First−Stage compressor wheels that do not carry a “S.P.” (shot peen) next to the part number are subject to the following procedure.

First−Stage compressor wheels which are within repairable limits may be shot peened.

a. Remove all plating per paragraph 9, this WP.

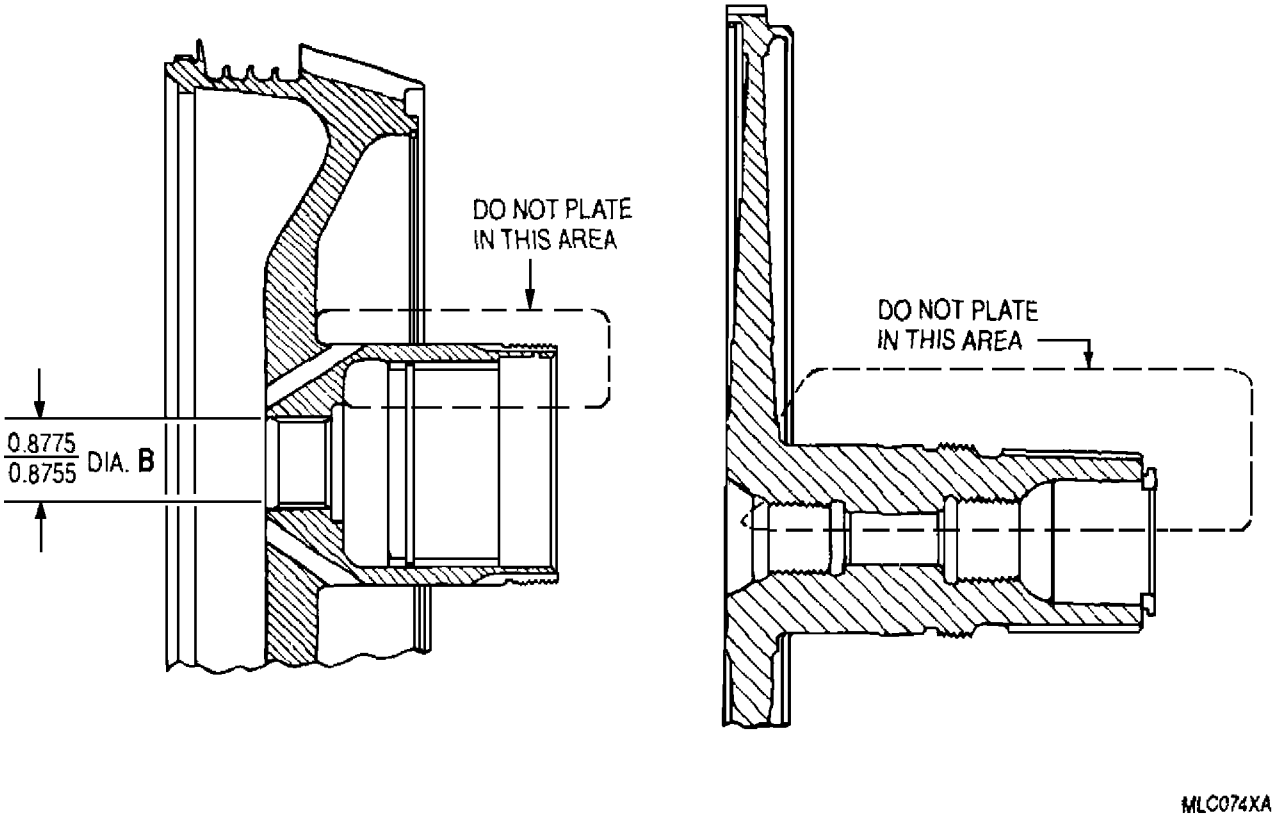

Figure 9. Compressor First− and Fourteenth−Stage Wheel No Plating Areas

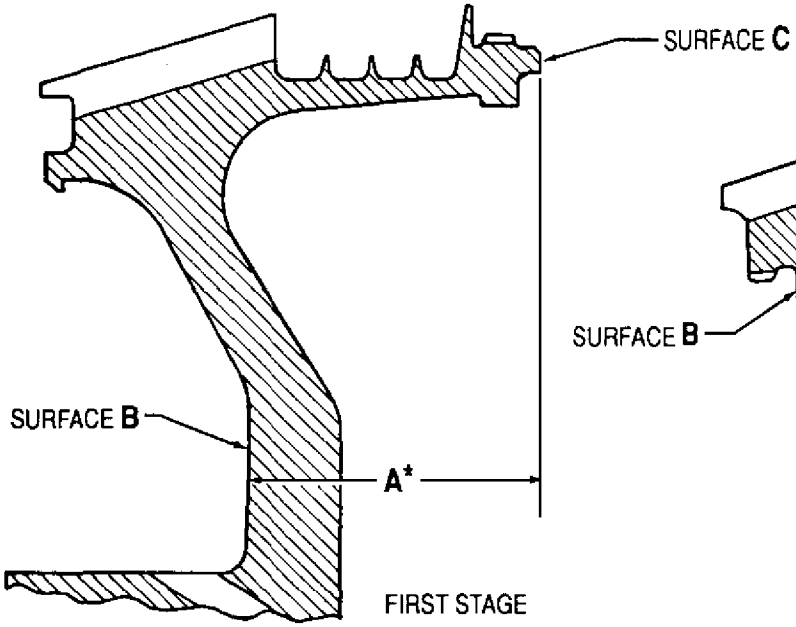

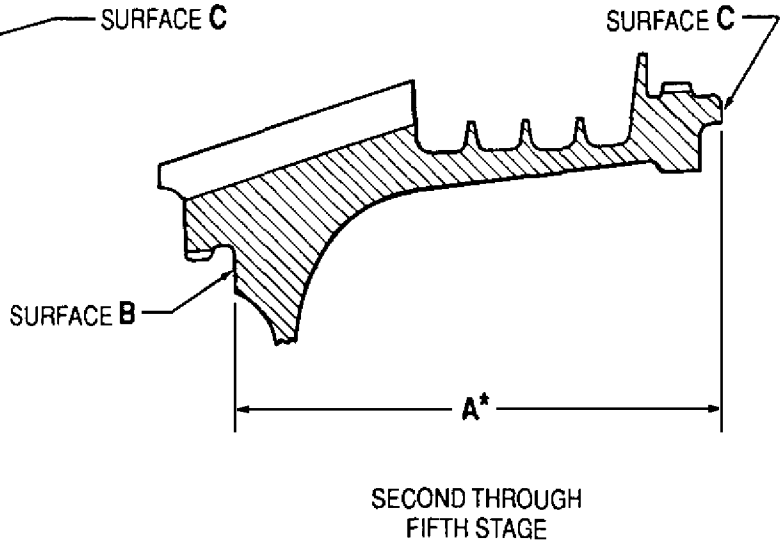

OPTIONAL TO PLATE SURFACE **B** AND SURFACE **C**.

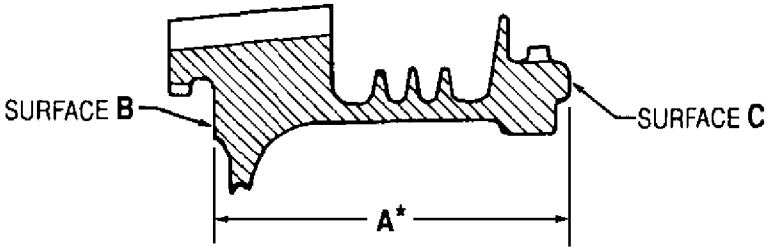

* DIMENSION **A** MUST BE MET AFTER ALL PROCESSING HAS BEEN COMPLETED.

STAGE	DIMENSION **A**
1	1.565 – 1.561
2	2.295 – 2.297
3	2.148 – 2.150
4	1.789 – 1.791
5	1.912 – 1.914
6	1.436 – 1.438
7	1.371 – 1.373
8	1.285 – 1.287
9	1.273 – 1.275
10	1.541 – 1.543
11	1.259 – 1.261
12	1.208 – 1.210
13	1.185 – 1.187
14	0.326 – 0.330

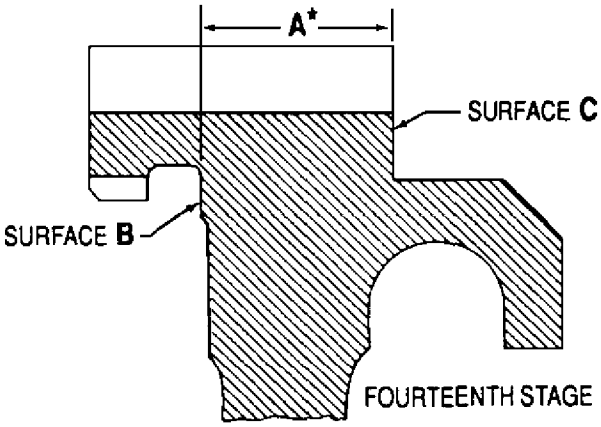

MLC076XA

Figure 10. Compressor Wheel Width Control Dimensions

b. Ship the First-Stage wheel to one of the following approved sources:

Metal Improvement Company, Inc.
3239 East 46th Street,
Veron, California 90058
Plant I.D. No. 6

Metal Improvement Company, Inc.
105 Alfred Kuehue Boulevard
Brampton, Ontario L6T 4K3
Plant I.D. No. 9

Metal Improvement Company, Inc.
276 Osmaston Road
Derby, England
Plant I.D. No. 13

Metal Improvement Company, Inc.
5791 Creek Road
Blue Oak, Ohio 45242
Plant I.D. No. 10

NOTE

Metal Improvement Company will shot peen and inspect all wheels for 100% shot peening coverage of the designated area as defined in their specification, Process No. 1189. These areas are the blade dovetail slots and front rim face. Using specification AS478, Metal Improvement Company will vibro peen the letters "S.P." immediately following the part number on the rear face of the wheel. Immediately following the "S.P." designation, Metal Improvement Company will also vibro peen the appropriate code number to designate which of the four locations physically performed the shot peening.

Wheels returned from Metal Improvement Company following shot peening must be replated per current overhaul manual requirements.

11. COMPRESSOR ROTOR WHEELS - THIRTEENTH-STAGE EXTERNAL SPLINE INSPECTION.

Support Equipment Required

Part No./Type Designation	Nomenclature
23034373	Protector, Thirteenth-Stage compressor wheel web
23034374	Protector, Thirteenth-Stage compressor wheel O.D.

Materials Required

Specification No./Part No.	Nomenclature
O-N-350	Nitric acid (HNO_3)
——	Zyglo

a. Measure the external spline diameter over 0.054 in. diameter pins. Wheels with spline diameter less than 12.8442 in. are to be processed as follows:

CAUTION

Protect the wheel web and OD during shot peening by using 23034373 and 23034374 Thirteenth-Stage compressor wheel web and OD protectors (figure 11 and 12).

NOTE

Blades must be removed when using wheel protector 23034374.

(1) Shot peen the rim ID of wheel, using stabilized 0.019 - 0.028 in. cut wire shot with machine set to produce peening intensity of 10A2. Bring diameter (as measured over 0.054 in. diameter pins) of external splines to a uniform 12.8442 - 12.8476 in. diameter by adjusting shot peen time versus wheel revolution speed to produce desired increase. Refer to AMS 2430. Wheel speed must be great enough to ensure a minimum of at least two complete revolutions. Shot peening is to be confined outside the web fillet radius but may feather out in this area. Growth by shot peening is to be limited to 0.012 in. total.

b. Wet grit blast the shot peened area to remove the iron oxide formation.

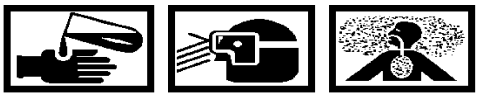

Nitric Acid O-N-350 **62**

NOTE

Wheels may be passivated in lieu of grit blasting.

c. If wet grit blast is not used, passivate wheels in nitric acid solution for thirty minutes using nitric acid (40°Be') 33 1/2 percent by volume, remainder water, with solution at room temperature.

d. With the wheel firmly clamped on its front mounting face to reduce waviness, machine the rear mounting face to restore squareness. In the free state, a 1.184 − 1.187 in. axial rim dimension is acceptable providing the spread between minimum and maximum measurement does not exceed 0.002 in.

NOTE

Cracks are not acceptable.

e. Super Zyglo inspect the wheels for cracks.

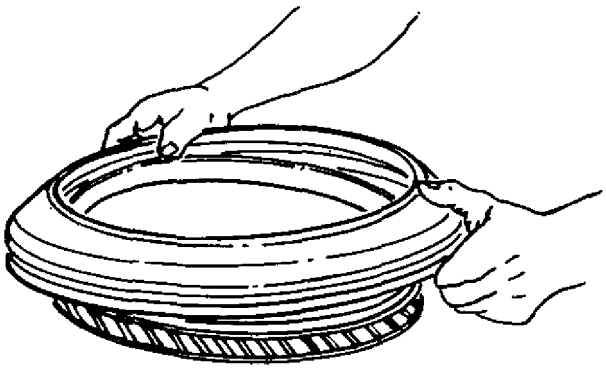

MLC067AH

Figure 11. Installing 23034374 Thirteenth−Stage Compressor Wheel O.D. Protector

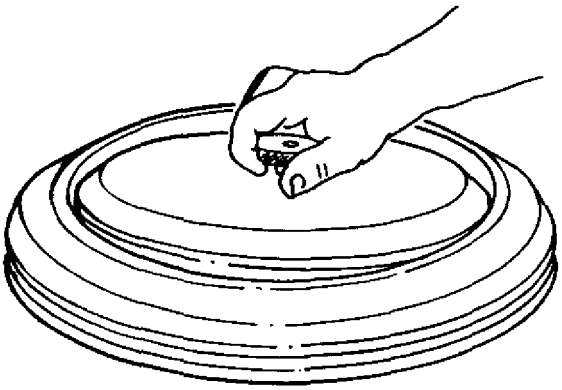

MLC068AH

Figure 12. Installing 23034373 Thirteenth−Stage Compressor Wheel Web Protector

DEPOT MAINTENANCE

INSPECTION AND REPAIR

COMPRESSOR ROTOR BLADES

Reference Material

Cleaning and Corrosion Treatment − Standard Practices . . . . . WP 008 00
Magnetic Particle and Fluorescent Penetrant Inspection − Procedures . . . . . WP 017 00
Compressor Rotor Assembly − Disassembly . . . . . WP 025 00
Compressor Rotor Assembly − Assembly and Balance . . . . . WP 026 00

Alphabetical Index

Subject **Page No.**

Compressor Rotor Blades 2
Inspection 2
Repair 2
Rework 7
Introduction 2

Record of Applicable Technical Directives

None

1. **INTRODUCTION.**

2. This work package (WP) provides the instructions for the inspection and repair of the compressor rotor blades used in the T56−A−427 turboprop engine.

3. **COMPRESSOR ROTOR BLADES.**

4. COMPRESSOR ROTOR BLADES − INSPECTION.

a. Remove compressor rotor blades from wheel assembly, if not already done. Refer to WP 025 00.

b. Clean compressor rotor blades per WP 008 00.

c. Inspect compressor rotor blades. Refer to table 1.

d. Refer to WP 017 00 for fluorescent penetrant inspection (FPI) procedures.

5. COMPRESSOR ROTOR BLADES − REPAIR.

a. Repair compressor rotor blades that fail inspection. Refer to Disposition column, table 1 and paragraph 6, this WP.

b. Replace compressor rotor blades not within serviceable limits after repair.

Table 1. Compressor Rotor Blades − Inspection and Repair

Condition	Serviceable Limits	Repairable Limits	Disposition
WARNING Compressor blade damage can occur when an engine has been operated with a blockage in the air inlet. When a rotor assembly is so identified, or if during disassembly any indication of compressor blockage (bird particles or foreign material) is found, the following inspection and disposition shall apply: a. Condemn all blades in the Second−, Third−, and Sixth−Stage wheels. b. Condemn all blades in any other wheel stages if a blade in that stage is found to have a fatigue crack not associated with impact damage. c. Substantiate blade cracks by metallurgical inspection. d. Process all compressor rotor blades per paragraphs 4 through 6.			
Blade bent.	Not serviceable.	Not repairable.	Condemn blades exceeding serviceable limits.
Erosion at blade tip.	Not serviceable.	Not repairable.	Condemn blades exceeding serviceable limits.
Surface damage in outer 2/3 of the airfoil (other than leading or trailing edge).	See figure 1.	See figure 1.	Rework by blending out sharp edges.

Table 1. Compressor Rotor Blades − Inspection and Repair (contd)

Condition	Serviceable Limits	Repairable Limits	Disposition
Dents:			
Airfoil.	See figure 1.	Exceeds serviceable limits.	Condemn blades exceeding serviceable limits.
Leading and trailing edge.	See figure 2.	See figure 3.	Straighten ail dents in outer 2/3 of either edge.
Tip.	See figure 2.	See figure 4.	Reform by straightening or blending within repairable limits.
Leading and trailing face of base.	0.020 in. deep provided damage does not extend into radius to airfoil section or restrict blade installation per WP 026 00.	Exceeds serviceable limits.	Condemn blades exceeding serviceable limits.
Nicks:			
Airfoil.	See figure 1.	See figure 1.	Rework by blending out sharp edges.
Leading and trailing edge.	See figure 2.	See figure 3.	Blend nicks to form a smooth airfoil contour. Metal removal must be held to a minimum.
Tip.	See figure 2.	See figure 4.	Blend nicks within repairable limits.
Cracks: Lower 1/3.	Not serviceable.	Not repairable.	Condemn blades exceeding serviceable limits.
Upper 2/3.	See figures 2 and 3.	See figure 2 and 3.	Reinspect (FPI) reworked blades. Condemn blade if crack indications exist.
Abrasion pitting (frost−like appearance caused by small particle impact).	Acceptable, providing trailing and leading edges are polished to restore edge radius.	See figure 3.	Reform by straightening or blending within repairable limits.
Blade corrosion.	See figure 5.	Exceeds serviceable limits.	Rework per paragraph 6, this WP.
Fretting on bottom surface of blade base.	0.010 in. max depth.	Exceeds serviceable limits.	Blend fretted areas.
Groove in front face of blade base.	0.020 in. deep provided that grooving is not in upper 10% of blade base face.	Exceeds serviceable limits.	Polish to remove all sharp edges.
Fretting wear indications on base 45° angled load surfaces.	Not serviceable.	Not repairable.	Condemn blades exceeding serviceable limits.

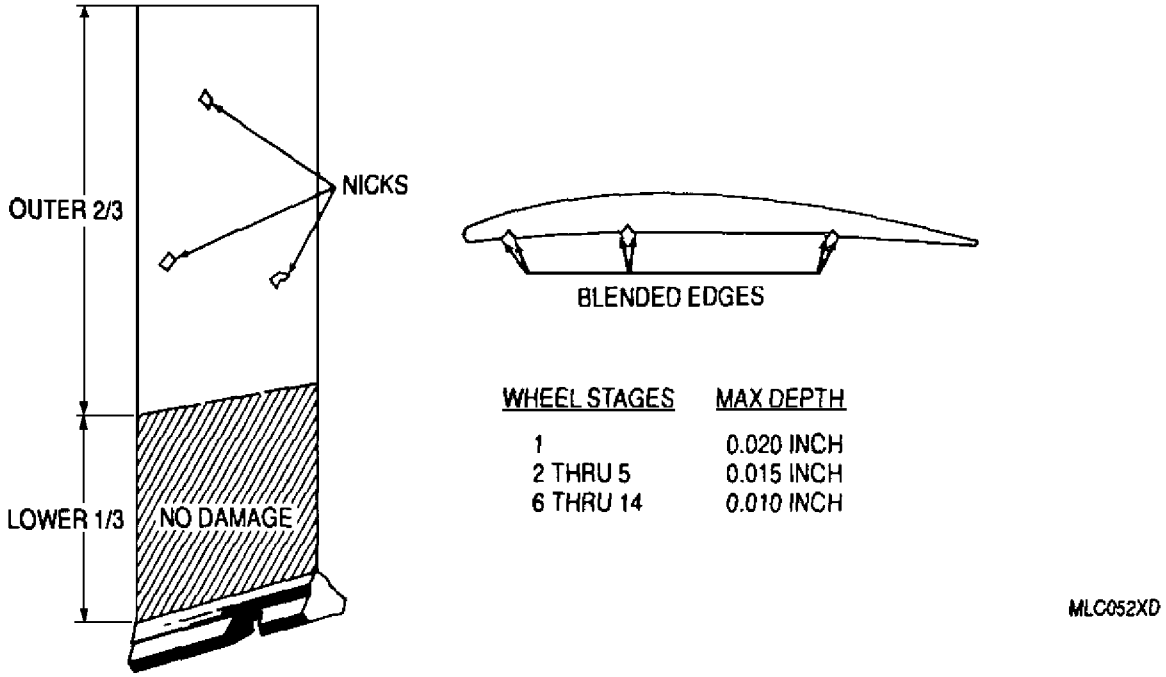

Figure 1. Compressor Blade Surface Damage Limits

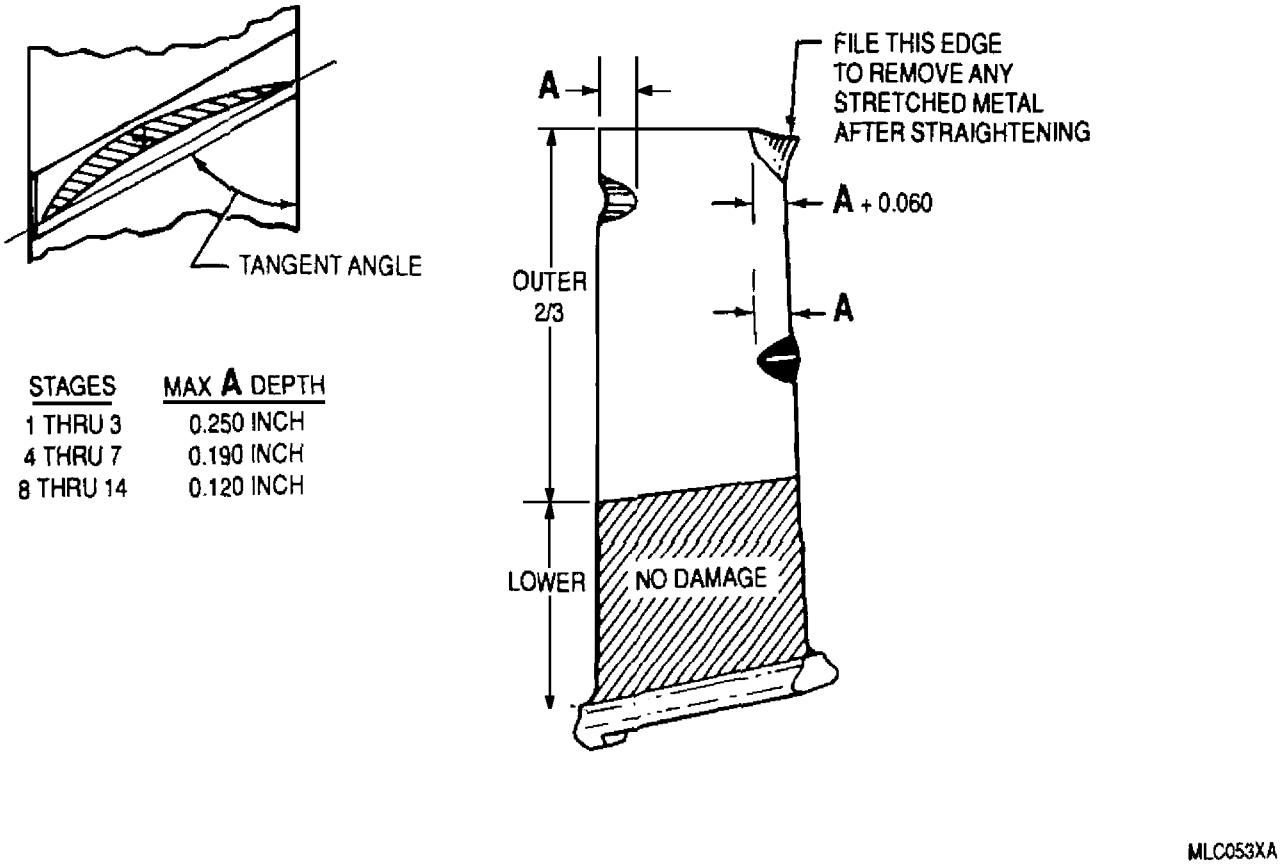

Figure 2. Compressor Blade Leading Edge, Trailing Edge Dent and Tip Damage Limits

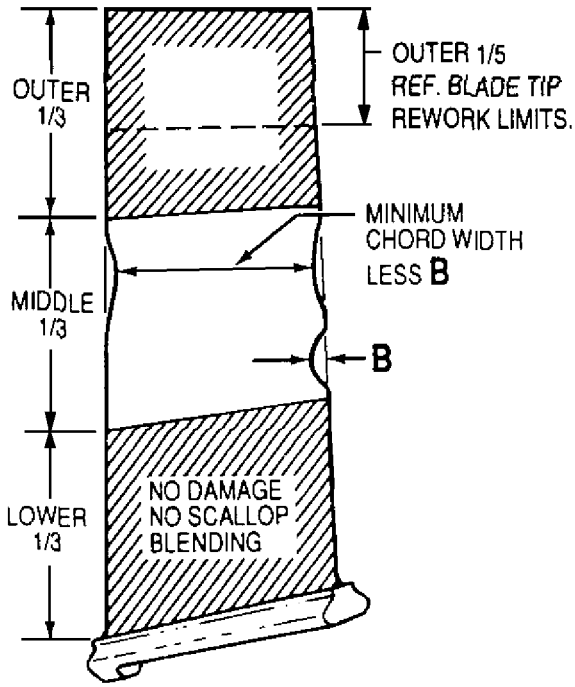

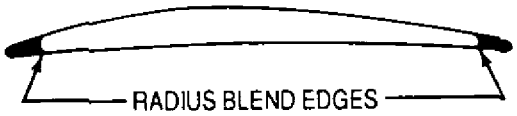

MAX B DEPTH

STAGES	OUTER 1/3	MIDDLE 1/3
1 AND 2	0.120 INCH	0.100 INCH
3 AND 4	0.090 INCH	0.070 INCH
5 THRU 7	0.070 INCH	0.050 INCH
8 THRU 14	0.050 INCH	0.035 INCH

MLC055X

Figure 3. Compressor Blade Leading and Trailing Edge Rework Limits

STAGE	1/5 CHORD
1	0.31 INCH
2	0.28 INCH
3	0.23 INCH
4	0.20 INCH
5	0.17 INCH
6	0.15 INCH
7	0.14 INCH
8–14	0.12 INCH

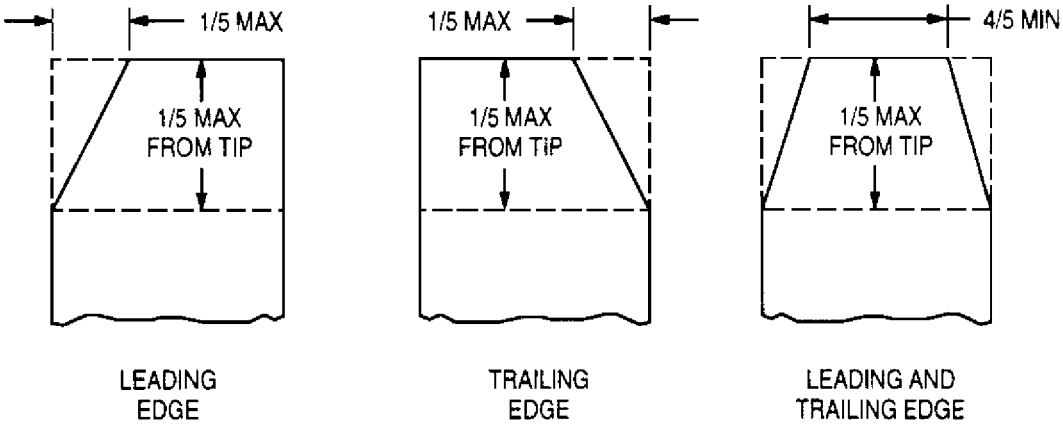

MLC054XA

Figure 4. Compressor Blade Tip Rework Limits

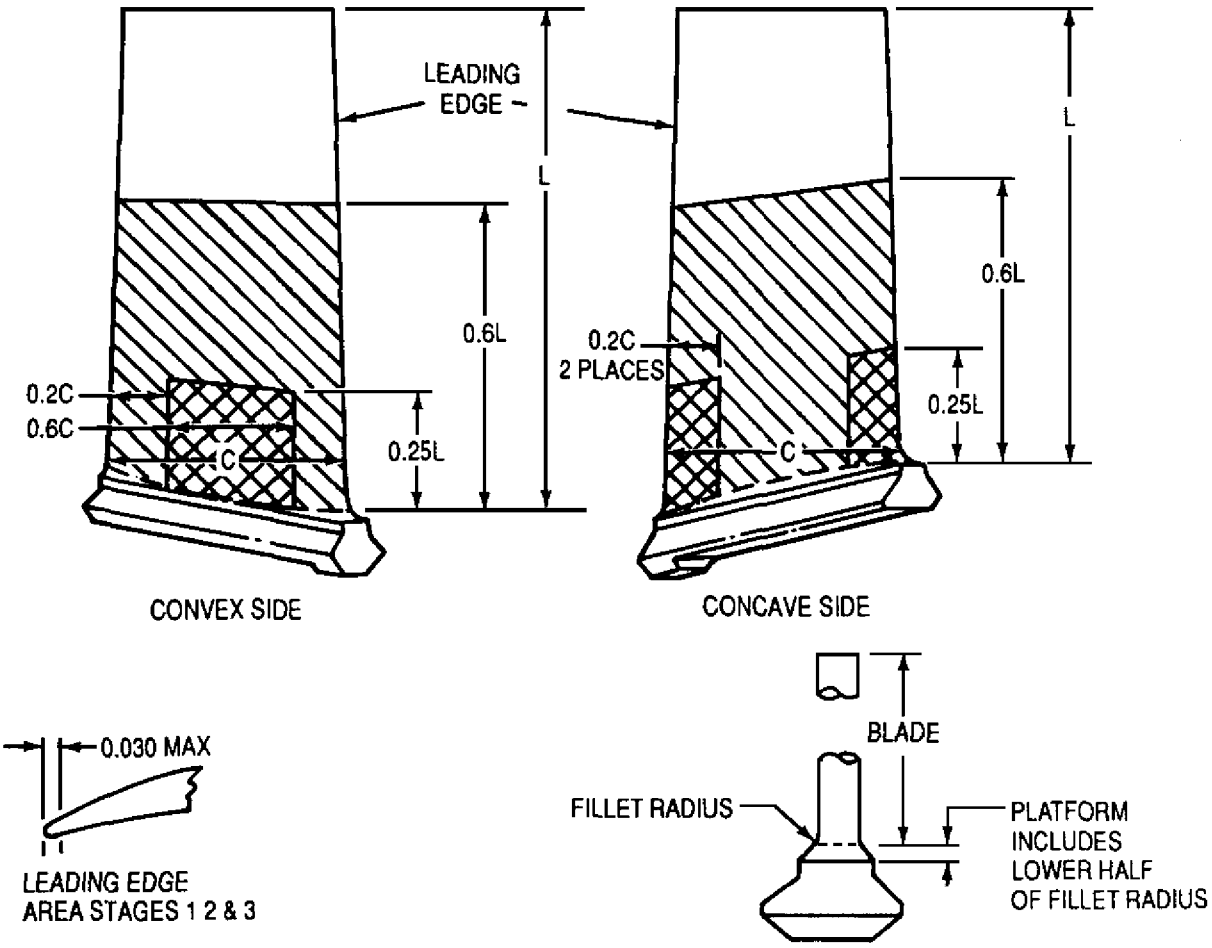

NOTES

Polish airfoil surfaces on blades showing corrosion stain prior to inspection for pitting. A pit is any dark spot which will not polish away with 320 or finer emery cloth.

Seal all acceptable corrosion pits with AMS 3135 silicone sealer. Wipe to remove excess from surfaces and air dry.

TYPICAL ALL STAGES

CRITICAL AREA:
No corrosion pitting acceptable in this area except leading edge area (as shown) on stages 1 thru 3 only is semi-critical.

SEMI–CRITICAL:
Scattered corrosion pits less than 0.010 inch diameter are acceptable provided the pits are not clustered, do not, interconnect or form a line type pattern.

NON–CRITICAL:
Scattered corrosion pits less than 0.030 inch diameter are acceptable provided the pits do not interconnect or form a line type pattern. Individual pits in clustered pits do not exceed 0.015 inch in diameter.

C = CHORDAL WIDTH 0.150 INCH ABOVE PLATFORM
L = LENGTH OF BLADE

Figure 5. Compressor Blade Corrosion Limits

MLC029AA

6. COMPRESSOR ROTOR BLADES − REWORK.

Support Equipment Required

Part No./Type Designation	Nomenclature
23033011	Template set, compressor blade rework limit (12 per set)

a. Use 23033011 blade rework template (figure 6) to inspect blades.

b. Straighten damaged areas as follows:

(1) Straighten all damaged edges and tip corners to original form and contour within defined areas.

(2) Straighten to remove dents and deformed areas adjacent to nicks within the limits of figure 2.

(3) After straightening, blend to remove all remaining damage with minimum material removal and within defined and dimensional finish limits.

(4) Inspect blade per paragraph 4, this WP.

c. Blend damaged areas as follows:

(1) Most blending can be accomplished using pattern type files (usually #4 cut) to remove all damage remaining after straightening. Blending limits are defined in figures 3 and 4.

(2) Remove minimum material to eliminate damage. All edges shall blend smoothly to the original contour and the leading and trailing edges shall be full radius blended as shown in figure 3.

(3) Stone and polish in a longitudinal direction all blended areas to completely remove all file marks. The final surface finish in all blended and straightened areas shall be equal to or better than original airfoil surface finish.

(4) Surface damaged blades with minor nicks as shown in figure 1 shall be lightly stoned and polished to remove raised metal and to slightly break sharp edges.

(5) Minor rework (stoning or polishing to restore rough surfaces to original surface finish without altering airfoil dimensions beyond blueprint tolerances) can be applied to all surfaces of the airfoil.

(6) Inspect blade per paragraph 4, this WP.

d. The number of blade per stage that can be reworked to near maximum limits is provided in table 2.

e. Install compressor rotor blades in rotor wheel. Refer to WP 026 00.

Table 2. Number of Blades Per Stage Reworked to Near Maximum Limits

Stage	No. of Blades With Tip Corner Blends	No. of Blades With Edge Blends
1	3	5
2	3	5
3	4	8
4	4	8
5	5	10
6	5	10
7	5	10
8−14	6	12

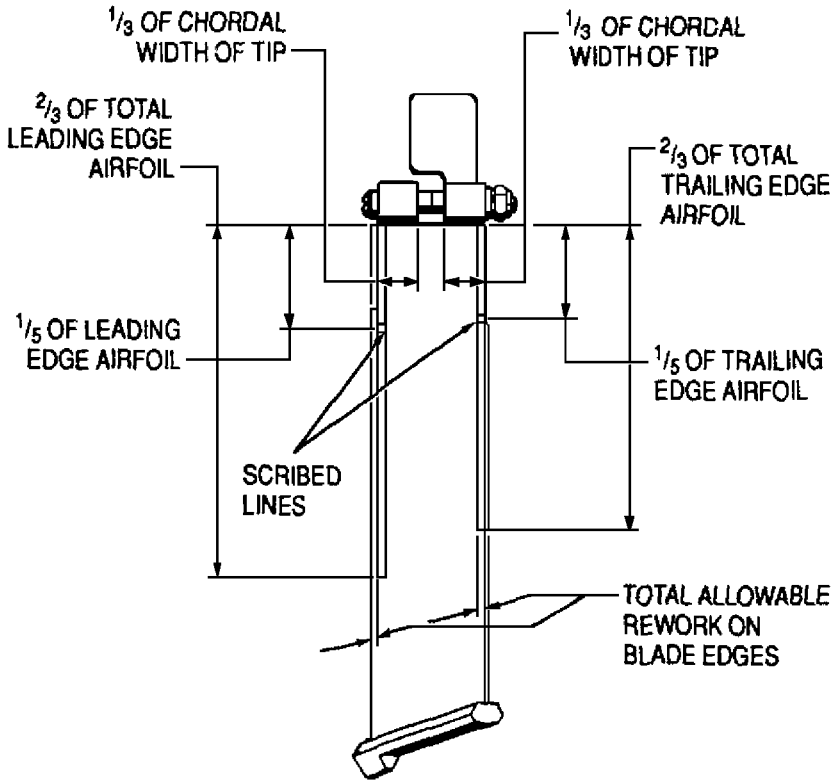

MLC057XA

Figure 6. 23033011 Compressor Blade Rework Limit Templates

DEPOT MAINTENANCE

INSPECTION AND REPAIR

COMPRESSOR WHEEL TIE BOLT

Reference Material

Magnetic Particle and Fluorescent Penetrant Inspection − Procedures . . . . . WP 017 00
Plating and Surface Treatment of Parts . . . . . WP 018 00
Phosphate Treatment, Anti−Chafing . . . . . AMS 2481

Alphabetical Index

Subject **Page No.**

Compressor Wheel Tie Bolt 2
Inspection 2
Repair 2
Introduction 2

Record of Applicable Technical Directives

None

1. **INTRODUCTION.**

2. This work package (WP) provides the instructions for inspection and repair of the compressor wheel tie bolt used on the T56−A−427 turboprop engine.

3. **COMPRESSOR WHEEL TIE BOLT.**

4. COMPRESSOR WHEEL TIE BOLT − INSPECTION.

Support Equipment Required

Part No./Type Designation	Nomenclature
23004326	Gage−Ring, compressor tie−bolt GO/NO−GO
23004327	Gage−Plug, compressor 0.875−20 thread setting

a. Inspect compressor wheel tie bolt. Refer to table 1.

b. Refer to WP 017 00 for fluorescent penetrant inspection (FPI) procedures.

5. COMPRESSOR WHEEL TIE BOLT − REPAIR.

a. Repair compressor wheel tie bolt. Refer to Disposition column, table 1.

Table 1. Compressor Wheel Tie Bolt − Inspection and Repair

Condition	Serviceable Limits	Repairable Limits	Disposition
Cracks.	Not serviceable.	Not repairable.	Condemn tie bolt exceeding serviceable limits.
Wear on tie bolt threads.	Check with ring gage 23004326. Set ring gage with plug gage 23004327 (figure 1). Tie bolt must not thread in no−go side of ring gage.	Not repairable.	Condemn tie bolt exceeding serviceable limits.
Scoring or fretting wear on thrust face of bolt head.	Not serviceable.	Any damage which can be removed by grinding if bolt head flange will not be less than 0.475 in. thick.	Grind to repair and granodize, AMS 2481, if the thickness of bolt head flange will not be less than 0.484 in. after repair. When grind repair will decrease flange to less than 0.484 in. thickness, but not less than 0.475 in., grind the minimum necessary and apply chrome plating per WP 018 00. Finish grind the plated flange to a thickness of 0.490 in. Chrome plate shall not exceed 0.015 in. thick after grinding. The plated flange shall be within 0.001 in. FIR of the tie bolt axis and have a surface finish of 16 RMS. Ensure the 0.015−0.035 in. edge break is maintained after finish grind of plating.(figure 2).

Table 1. Compressor Wheel Tie Bolt − Inspection and Repair (contd)

Condition	Serviceable Limits	Repairable Limits	Disposition
Wear on land diameters.			
Minor wear.	Land diameter must be of the size whereby tie bolt to compressor wheel clearance is as follows: Stage No. 5 and Stage No. 9: 0.0010L min. and 0.0050L max.	0.8715 in. min. land diameter.	Polish lands and flash nickel plate to 0.001 − 0.002in. thick. Refer to WP 018 00. Flash plated lands will not be machined. The land diameters must be concentric with tie bolt axis within 0.001 in. FIR. and finish shall be 16 RMS.
Heavy wear.	Not serviceable.	Minimum repairable land diameter is 0.8635 in.	Grind lands minimum necessary, and plate. Refer to WP 018 00. Plating thickness must not be less than 0.0005 in. or more than 0.005 in. after finish grinding. The land area diameter must be 0.8735 − 0.8750 in. and concentric with the tie bolt axis within 0.001 in. FIR. The finish on land area shall be 16 RMS. Surface damage to the land flats is permitted to a depth of 0.030 in. Keep the flat surfaces on the Fifth and Ninth−Stage lands. The thickness of the shaft at the flats must be 0.8350 − 0.8135 in. (figure 2).
Corrosion or flaking, between the shaft lands.	Not serviceable.	0.7925 in. min shaft diameter.	Grind to rework and remove minimum to cleanup, then plate. Refer to WP 018 00. Flanking plating must be stripped and then plated again. Minor corrosion or flaking at these locations may be brush plated.

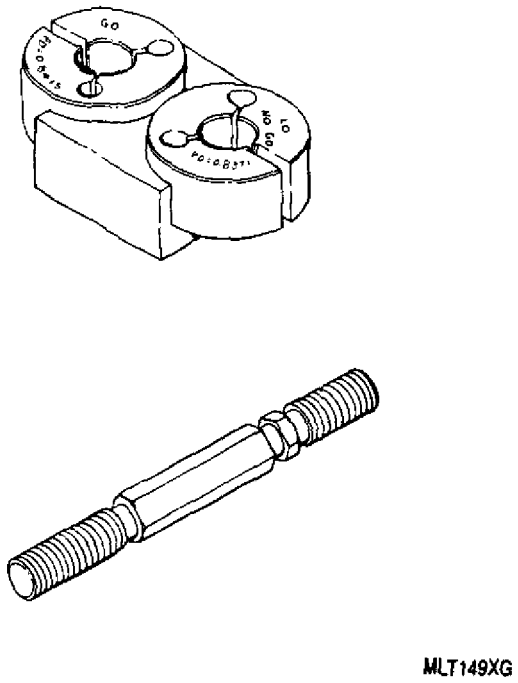

Figure 1. Ring Gage 2304326 and Plug Gage 23004327 For Checking Tie Bolt Threads

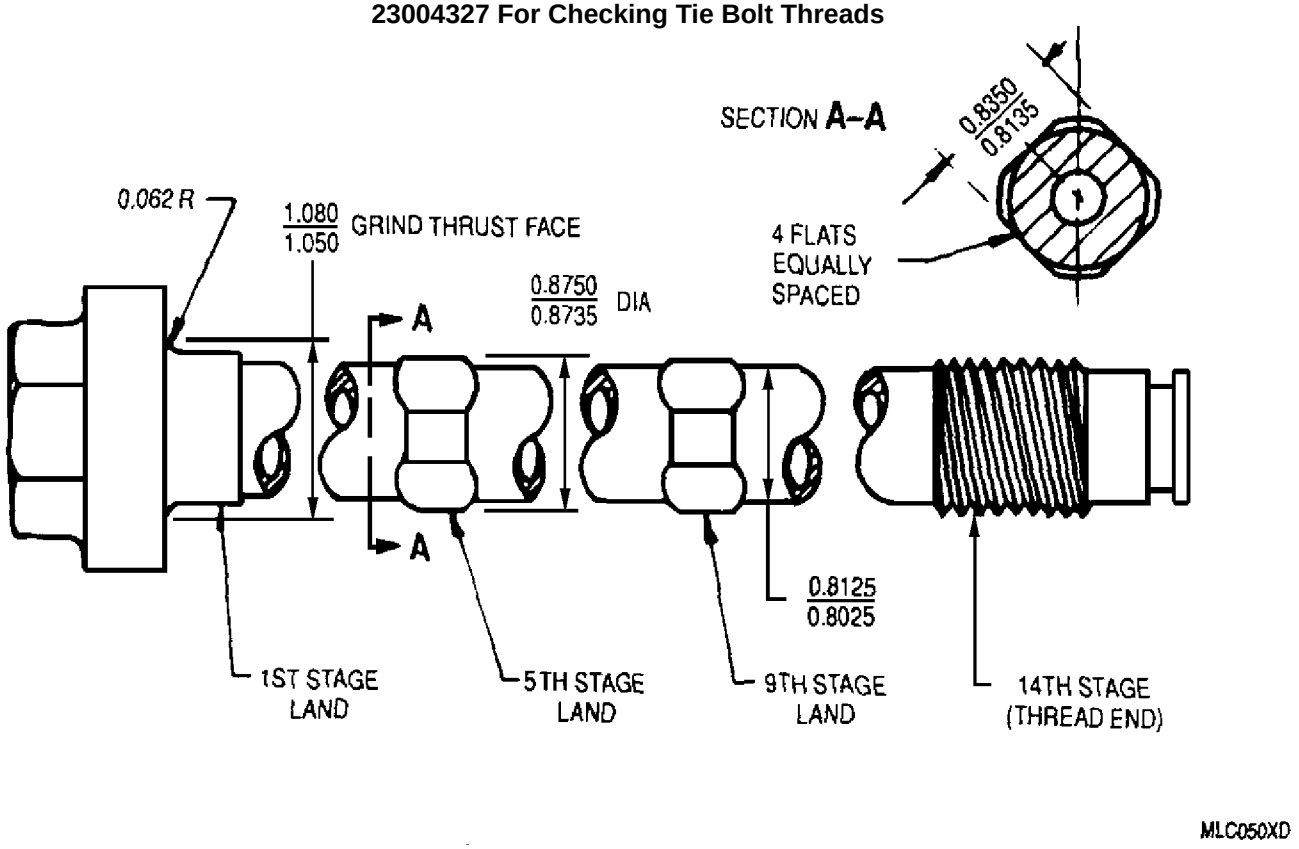

Figure 2. Compressor Wheel Tie Bolt Rework

DEPOT MAINTENANCE

INSPECTION AND REPAIR

COMPRESSOR EXTENSION SHAFT AND HOUSING

Reference Material

Magnetic Particle and Fluorescent Penetrant Inspection − Procedures . . . . . WP 017 00
Plating and Surface Treatment of Parts . . . . . WP 018 00
Protective Treatments, Magnesium Alloys . . . . . AMS−M−3171

Alphabetical Index

Subject **Page No.**

Compressor Extension Shaft and Housing 2
Inspection 2
Repair 2
OD Repair 4
Rear Face and OD Combined Repair 7
Rear Face Repair 3
Introduction 2

Record of Applicable Technical Directives

None

1. **INTRODUCTION.**

2. This work package (WP) provides the instructions for inspection and repair of the compressor extension shaft and housing used in the T56−A−427 turboprop engine.

3. **COMPRESSOR EXTENSION SHAFT AND HOUSING.**

4. COMPRESSOR EXTENSION SHAFT AND HOUSING − INSPECTION.

a. Inspect compressor extension shaft and housing. Refer to table 1.

b. Refer to WP 017 00 for Fluorescent Penetrant Inspection (FPI) procedures.

5. COMPRESSOR EXTENSION SHAFT AND HOUSING − REPAIR.

Support Equipment Required

Part No./Type Designation	Nomenclature
6799573	Gage, shim installation measuring, air inlet housing

NOTE

After all rework to the extension shaft housing and extension shaft bearing cage, check measurements and mark dimensions as indicated in figure 2. Check Dimension C in air inlet housing, using 6799573 measuring gage (figure 2). These dimensions are used to determine side gear shim requirements.

a. Repair compressor extension shaft and housing. Refer to Disposition column, table 1.

b. Replace compressor extension shaft not within serviceable limits after repair.

Table 1. Compressor Extension Shaft and Housing − Inspection and Repair

Condition	Serviceable Limits	Repairable Limits	Disposition
Crack indications on housing.	Crack indications which do not bleed back.	Not repairable.	Condemn housing exceeding serviceable limits.
Fretting:			
Housing rear face.	No fretting; housing thickness within 2.189−2.185 in.	2.185 in. min housing thickness.	Rework housing per paragraph 6, this WP. Refer to paragraph 8, this WP for combination rework of housing rear face and OD.
Housing OD.	5.563−5.560 in. OD.	5.558 in. min OD.	Repair OD per paragraph 7, this WP. Refer to paragraph 8, this WP for combination rework of housing rear face and OD.
OD of O−ring grooves.	5.320−5.317 in. OD.	Not repairable.	Condemn part exceeding serviceable limits.
Damaged bearing journal, Diameter C (figure 3).	2.3626 in. max diameter and any sharp edges or metal pickup removed.	2.3321 in. min diameter.	Grind journal and chrome plate per WP 018 00. Finish grind Diameter C to limits of figure 3.
Wear or burrs on shaft Diameter E (figure 3).	2.071 in. max diameter. No wear or burrs acceptable.	Exceeds serviceable limits.	Repair light wear or burrs by polishing. If serviceable limits are exceeded, grind and chrome plate Diameter E per WP 018 00. Finish grind Diameter E to limits of figure 3.

6. COMPRESSOR EXTENSION SHAFT AND HOUSING − REAR FACE REPAIR.

Support Equipment Required

Part No./Type Designation	Nomenclature
Type 4E	Gun, metallizing
6799645	Protector, extension shaft housing assembly

Materials Required

Specification No./Part No.	Nomenclature
AMS 3135	Coating material, silicone resin
Metcolite C	Grit, aluminum oxide, (20−50 mesh)
MIL−PRF−680, Type II	Solvent, dry cleaning
Sprabond	Bonding material
Sprabronze AA	Finish, metallizing
——	Gloves, insulated

a. Remove dowels and studs on area to be reworked (figure 1).

NOTE

Maximum stock removed shall be such that thickness of metallized coating after machining shall not exceed 0.020 in.

b. Machine surface to allow application of metallizing coating. Remove only a minimum of material.

Dry Cleaning Solvent MIL−PRF−680, Type II **3**

c. Degrease in MIL−PRF−680, Type II dry cleaning solvent for a minimum of 20 minutes.

d. Mask parts as required on areas or holes, other than where coating is specified.

NOTE

Apply metal spray coating within two hours after surface preparation.

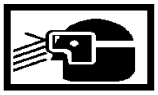

Compressed Air **56**

e. Grit blast area, using a 20−50 mesh size aluminum oxide grit, at 50 psi air pressure.

WARNING

Heated parts will cause skin damage (burns). Use clean insulated gloves to handle parts.

f. Preheat part to 175−200°F (80−98°C) for 30 minutes.

g. Using metallizing gun Type 4E and sprabond, apply bonding material 0.001−0.002 in. thick to surface shown in figure 1.

h. Apply Sprabronze AA metallizing finish to the thickness needed for finishing. Remove masks carefully to prevent damage to the spray coating.

NOTE

Impregnation is complete when the resin coating is no longer absorbed.

i. Apply AMS 3135 resin coating using a brush, spray, or roller. Allow sufficient time between coats for absorption of the compound.

j. Remove excess resin coating.

NOTE

The sprayed coating shall be adherent, uniform and free from blisters, chips or defects.

k. Air dry for one hour, then bake at 400°F (204°C) for one hour and air cool.

l. Machine and lap surface to a 63 RMS finish.

m. Reinstall all previously removed dowels and studs.

n. Store housing in 6799645 extension shaft housing assembly protector.

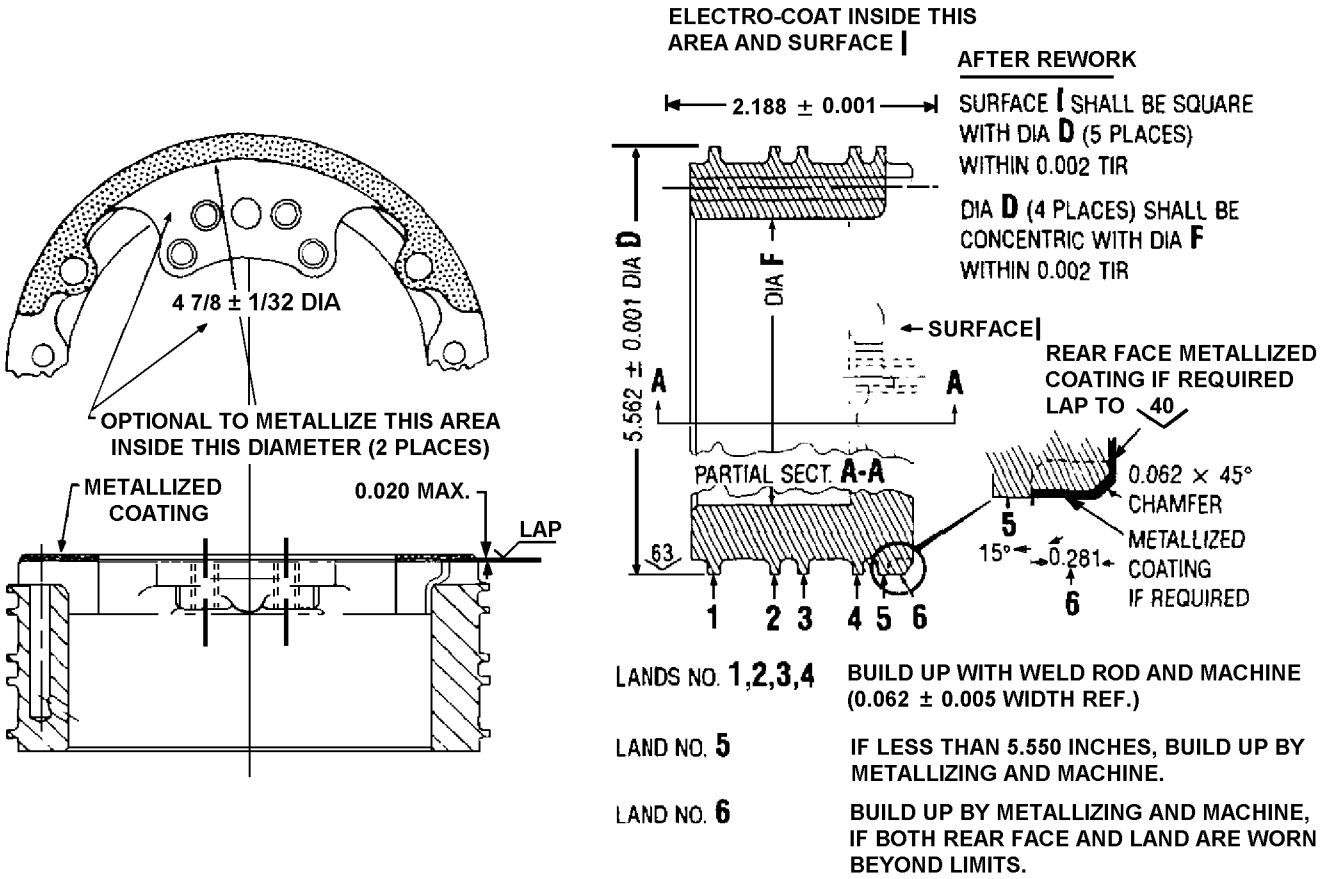

Figure 1. Compressor Extension Shaft Housing Repair

7. COMPRESSOR EXTENSION SHAFT AND HOUSING − OD REPAIR.

Support Equipment Required

Part No./Type Designation	Nomenclature
Type 4E	Gun, metallizing
6799645	Protector, extension shaft housing assembly

Materials Required

Specification No./Part No.	Nomenclature
AMS 3135	Sealer, silicone resin
MIL−T−23397	Tape, pressure sensitive masking
MIL−PRF−680, Type II	Solvent, dry cleaning
——	Potassium Fluoride (KFI)
——	Potassium Hydroxide (KOH)
——	Potassium Manganate 97% (K_2MnO_4)
——	Potassium Permanganate ($KMnO_4$)
——	Trisodium Phosphate (Na_3PO_4)
——	Dichromate
——	Acid, chromic

a. Remove the dowels and studs on areas to be reworked (figure 1).

Magnesium Treatment (Chrome Pickle)
AMS−M−3171, Type III (Dow 19) 13

b. Dichromate all over per AMS−M−3171.

c. Mask part to protect ID and chamfer at rear face OD.

d. Establish electrical contact, using magnesium attachments and protect leads at solution level with plater's tape.

Dry Cleaning Solvent
MIL−PRF−680, Type II 3

Magnesium Treatment (Chrome Pickle)
AMS−M−3171, Type III (Dow 19) 13

NOTE

Allow part to remain in degreaser for a minimum of 20 minutes. If necessary, immerse part in an etching solution (24 ounces chromic acid per gallon, water balance) at 175−185°F (79−85°C) for three minutes.

e. Degrease in MIL−PRF−680, Type II dry cleaning solvent.

f. Remove and rinse in cold running water.

Magnesium Treatment (Chrome Pickle)
AMS−M−3171, Type III (Dow 19) 13

g. Immerse part in coating solution, using AC current to attain a current density of 12−15 amps per square foot. Process parts in pairs. Solution is composed as follows:

Potassium Hydroxide (KOH)	16 oz per gal.
Aluminum Hydroxide (dried gel)	4 oz per gal.
Potassium Fluoride (KFI)	4.5 oz per gal.
Trisodium Phosphate (Na_3PO_4)	4.5 oz per gal.
Potassium Manganate 97% (K_2MnO_4)	2.5 oz per gal.
or	2.0 oz per gal.
Potassium Permanganate ($KMnO_4$)	

h. Raise voltage from 0 −25 volts in 3−4 seconds; then increase slowly as required (usually 80−85 volts). Time of process shall be 1−1.5 hours and temperature of solution 70−85°F (21−29°C).

NOTE

When potassium permanganate is used for original make up, it is recommended that the bath be operated through several coating cycles prior to usage. This aids to convert $KMnO_4$ to K_2MnO_4. When $KMnO_4$ is used for control makeup, the above procedure is not necessary as the conversion to K_2MnO_4 takes place during operation of the bath.

i. Coat OD to 5.561 − 5.563 in. diameter (five places) as shown in figure 1. Remove parts and rinse in cold running water, then hot water, and air dry.

j. Apply AMS 3135 resin coating using a brush, spray, or roller.

NOTE

Allow sufficient time between coats for absorption of compound. Impregnation is complete when sealer is no longer absorbed.

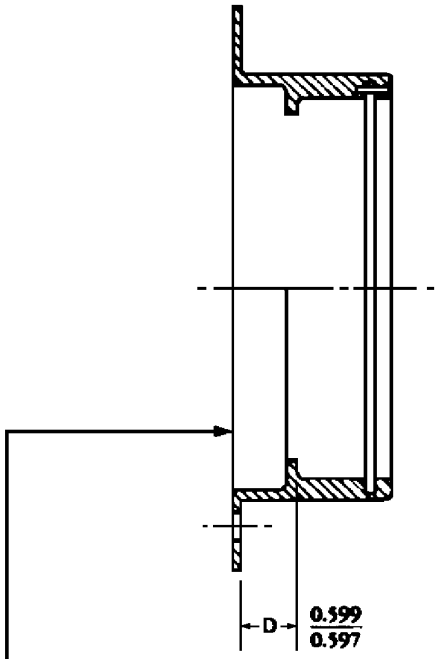

ELECTROLYTIC ETCH DIMENSION "D" TO THE NEAREST THREE DECIMALS HERE

EXTENSION SHAFT BEARING CAGE

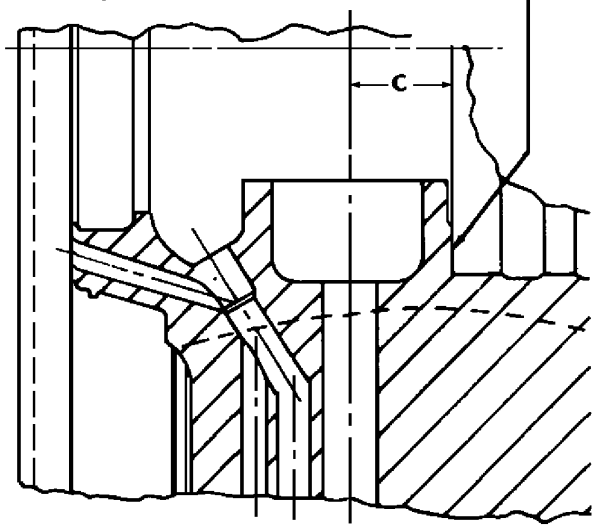

ELECTROLYTIC ETCH DIMENSION "C" TO THE NEAREST THREE DECIMALS HERE

AIR INLET HOUSING

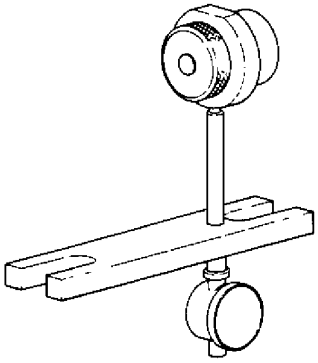

6799573 AIR INLET HOUSING SHIM INSTALLATION MEASUREMENT GAGE

NOTE

IF, DURING INSPECTION OF THESE PARTS, THE NEW DIMENSION IS OF A DIFFERENT VALUE THAN THAT CURRENTLY ON THE PART, THE OLD VALUE MUST BE MARKED OUT AND THE NEW DIMENSION ADDED.

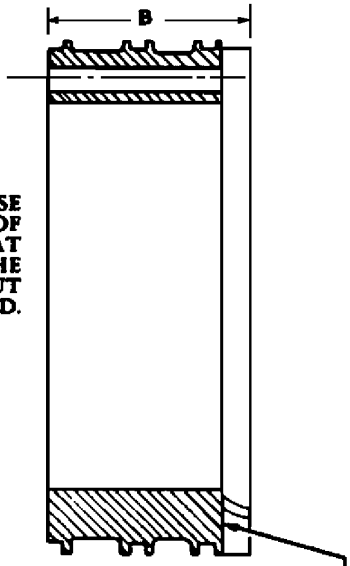

ELECTROLYTIC ETCH DIMENSION "B" TO THE NEAREST THREE DECIMALS HERE

EXTENSION SHAFT BEARING HOUSING

MLC059XA

Figure 2. Measurement of Compressor Air Inlet Housing, Bearing Housing, and Bearing Cage

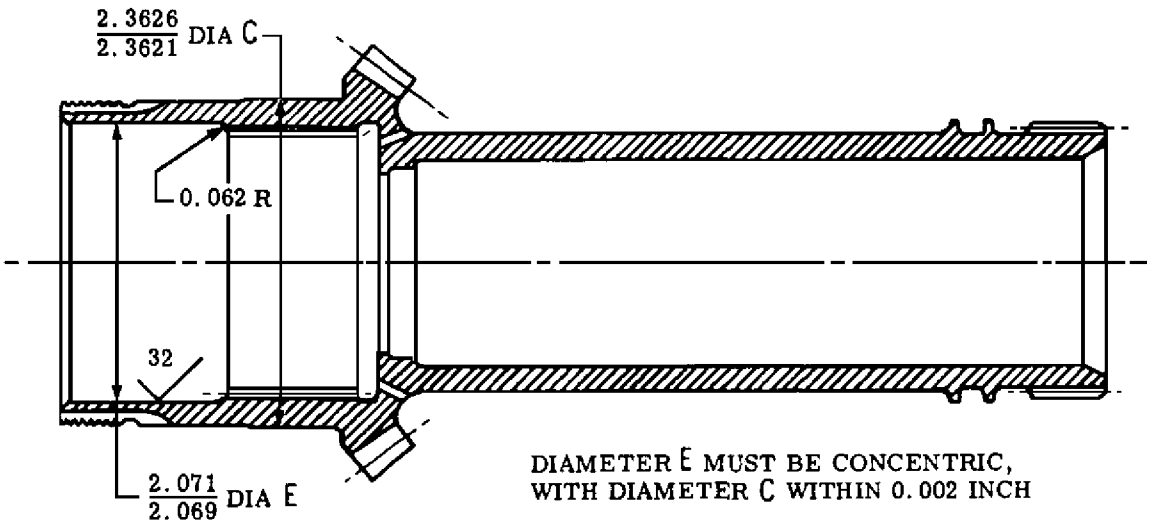

MLC060XD

Figure 3. Compressor Extension Shaft Repair

k. Remove excess resin.

WARNING

Heated parts will cause skin damage (burns). Use clean insulated gloves to handle parts.

l. Air dry for one hour; then bake at 400°F (204°C) for one hour and air cool.

NOTE

The sprayed coating shall be adherent, uniform, and free from blisters, chips or defects.

m. Reinstall all previously removed dowels and studs.

n. Store the housing in 6799645 extension shaft housing assembly protector (figure 4).

8. COMPRESSOR EXTENSION SHAFT AND HOUSING − REAR FACE AND OD COMBINED REPAIR.

Support Equipment Required

Part No./Type Designation	Nomenclature
6799645	Protector, extension shaft housing assembly

Materials Required

Specification No./Part No.	Nomenclature
AMS 2475	Dichromate
AMS 3135	Coating material, silicone resin
AZ−101	Wire, filler
O−S−598	Sodium Hydroxide
——	Chromic acid (H_2CrO_4)

a. Remove dowels and studs on areas to be reworked (figure 1).

NOTE

Dichromated parts do not require stripping.

b. Strip electro−coating.

Sodium Hydroxide O−S−598 **60**

CAUTION

Do not leave part in caustic or acid solutions longer than necessary. Damage to part may result.

(1) Remove resin coating by submerging part in caustic solution composed of two pounds sodium hydroxide per gallon of water.

(2) Strip electro−coating by submerging part in chromic acid solution of two pounds per gallon of water.

(3) Prepare 1/16 in. wide land OD's for welding using a wire brush in a portable hand power tool.

(4) Brush land OD's and sides lightly and only as required for cleaning before welding.

c. Using 0.045 in. dia AZ−101 filler wire, deposit weld material at least 0.010 in. thick on entire width of land OD (No.'s one through four). Welds shall be approximately 1.00 in. long passes, rotating part 180° between passes to minimize heat concentration.

d. Accomplish welding, using 1/16 in. diameter pure tungsten electrode, and No. four ceramic cup (water cooled) or No. six ceramic cup (argon cooled). Amperage shall be 0−50 amps using amperage foot control. Torch flow shall be ten cu. ft. per hour (No. four cup) or eight cu. ft. per hour (No. six cup).

NOTE

Minimize heat soak and assist rapid application of passes by directing an air blast on interior of part. Proper heat control is evident if the operator is able to hold hand on weld deposit after each application.

e. FPI weld for cracks per WP 017 00.

f. Blend out and repair if transverse weld cracks or porosity is evident.

WARNING

Heated parts will cause skin damage (burns). Use clean insulated gloves to handle parts.

g. Stress relieve at 400°F (204°C) for four hours and cool in still air.

h. Machine rear face, if necessary, for locating on dowel holes while machining OD.

i. Machine housing OD at O−ring lands, No.'s one through four, within Diameter D dimension in figure 1.

j. FPI weld areas of lands. Light, scattered surface porosity is acceptable.

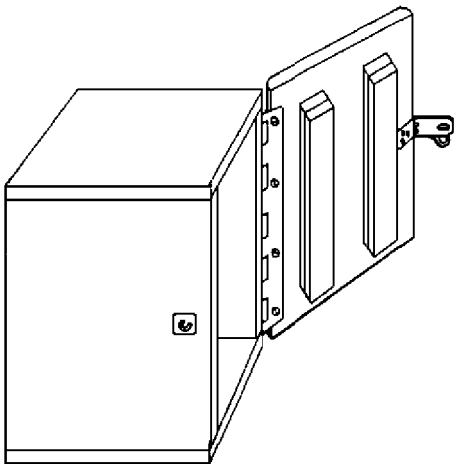

Figure 4. 6799645 Extension Shaft Housing Protector

Magnesium Treatment (Chrome Pickle)
AMS−M−3171, Type III (Dow 19) **13**

k. Apply AMS 2475 dichromate per AMS−M−3171 over the entire part.

l. When the rear or the wide land of No. six requires rework, proceed with the following steps; otherwise, apply resin coating.

(1) Apply two coats of AMS 3135 resin coating all over except ID and adjacent chamfer.

(2) Allow sufficient time to dry between coats.

(3) Air dry last coat for one hour, bake at 425°F (218°C) for two hours and air cool.

NOTE

The coating must be adherent, uniform, and free from blisters, chips or defects.

m. Machine OD of wide rear land and rear face before metalizing.

n. Mask part as required for metalizing rear face and OD at forward edge of wide rear land.

o. Impregnate area with AMS 3135 resin coating per step l.

NOTE

The forward portion of rear land (not metallized) is acceptable if the diameter is within 5.550 − 5.563 in.

p. Machine rear land OD to a 5.561 − 5.563 in. diameter.

q. Machine rear face and adjacent chamfer.

NOTE

All passages shall be free of obstructions.

r. Inspect oil passages including the 0.465 in. diameter hole.

s. Inspect edges of metallized coating for feather and loose edges.

t. All OD lands must be 5.561 − 5.563 in., except No. five as noted in figure 1.

u. Reinstall all previously removed dowels and studs.

v. Store housing in 6799645 extension shaft housing assembly protector.

DEPOT MAINTENANCE

INSPECTION AND REPAIR

EXTENSION SHAFT BEARING RETAINING RING

Reference Material

None

Alphabetical Index

Subject **Page No.**

Extension Shaft Bearing Retaining Ring 2
Inspection and Repair 2
Introduction 2

Record of Applicable Technical Directives

None

1. **INTRODUCTION.**

2. This work package (WP) provides the instructions for inspection and repair of the extension shaft bearing retaining ring used on the T56−A−427 turboprop engine.

3. **EXTENSION SHAFT BEARING RETAINING RING.**

4. EXTENSION SHAFT BEARING RETAINING RING − INSPECTION AND REPAIR.

a. Check for wear.

b. Wear is acceptable providing ring thickness is not less than 0.103 in.

c. Aside from removing burrs and sharp edges there are no repairable limits.

d. Condemn part if thickness is less than serviceable limit of step b.

DEPOT MAINTENANCE

INSPECTION

EXTENSION SHAFT BEARING CAGE

Reference Material

Bearing Cage − General Inspection, Repair, and Replacement . . . . . WP 011 00

Alphabetical Index

Subject **Page No.**

Extension Shaft Bearing Cage 2
Inspection 2
Introduction 2

Record of Applicable Technical Directives

None

1. **INTRODUCTION.**

2. This work package (WP) provides the instructions for inspection of the extension shaft bearing cage used on the T56−A−427 turboprop engine.

3. **EXTENSION SHAFT BEARING CAGE.**

4. EXTENSION SHAFT BEARING CAGE − INSPECTION.

a. Check for wear in retainer ring groove.

b. If ring groove wear is evident, condemn part.

NOTE

During reassembly, fit limit between bearing and bearing cage is 0.0019L in. minimum to 0.0036L in. maximum.

c. Measure inside diameter of bearing cage where bearing seats. Refer to WP 011 00.

NOTE

During reassembly, fit limit between the bearing cage and housing is 0.0005L in. minimum to 0.0035L in. maximum.

d. Measure outside diameter of bearing cage where cage fits into housing. Refer to WP 011 00.

DEPOT MAINTENANCE

INSPECTION AND REPAIR

COMPRESSOR SIDE GEAR

Reference Material

Magnetic Particle and Fluorescent Penetrant Inspection − Procedures . . . . . WP 017 00
Plating, Chromium, Hard Deposit . . . . . AMS 2406

Alphabetical Index

Subject **Page No.**

Compressor Stator Vanes 2
Inspection 2
Repair 2
Introduction 2

Record of Applicable Technical Directives

None

1. **INTRODUCTION.**

2. This work package (WP) provides the instructions for inspection and repair of the compressor side gear used on the T56−A−427 turboprop engine.

3. **COMPRESSOR SIDE GEAR.**

4. COMPRESSOR SIDE GEAR − INSPECTION.

a. Inspect compressor side gear. Refer to table 1.

b. Refer to WP 017 00 for fluorescent penetrant inspection (FPI) procedures.

Table 1. Compressor Side Gear − Inspection and Repair

Condition	Serviceable Limits	Repairable Limits	Disposition
Worn bearing journal.	0.7874 in. min journal diameter.	Less than serviceable limit.	Repair bearing journal per paragraph 5, this WP.

5. COMPRESSOR SIDE GEAR − REPAIR.

Support Equipment Required

Part No./Type Designation	Nomenclature
——	Faceshield
——	Gloves, Insulated

Materials Required

Specification No./Part No.	Nomenclature
MIL−PRF−680, Type II	Solvent, Dry Cleaning
TT−T−291	Mineral Spirit
——	Wax

WARNING

Grinding operations create metal particles which may enter the eye. Wearing of goggles/faceshield is required.

a. Grind 0.001 − 0.008 in. from Diameter A (figure 1) for cleanup. Record amount of plating required.

Dry Cleaning Solvent MIL−PRF−680, Type II **3**

b. Vapor degrease or wash gear in MIL−PRF−680, type II, dry cleaning solvent.

WARNING

Heated parts will cause skin damage (burns). Use clean insulated gloves to handle parts.

c. Stress relieve at 265−285°F (130−140°C) for five hours.

d. Mask gear by dipping in hot wax.

CAUTION

Do not scribe gear while removing wax.

e. Hand trim wax from area to be plated, using non−metallic scraper.

f. Chrome plate, as required per AMS 2406.

Paint Thinner TT−T−291 **8**

g. Using mineral spirits, remove was. Clean and rinse gear in running water. Air dry.

h. Visually inspect chrome plated area for bonding to base metal.

i. Lap centers.

j. Rinse gear in running water and air dry.

CAUTION

Detrimental effects to the base metal can occur from grinding chrome plate.

k. The following procedures shall be used when grinding plated surfaces to size:

(1) Continuously flood the work piece with filtered coolant during all grinding operations.

(2) Use a freshly dressed wheel at a maximum of 6500 surface feet per minute.

(3) The maximum desired feed rate shall not exceed 0.0002 in./rev for plunge grind or 0.0002 in./pass for reciprocating grind for both rough and finish grind.

WARNING

Grinding operations create metal particles which may enter the eye. Wearing of goggles/faceshield is required.

NOTE

Transition from the plated area to the parent metal must be smooth. Notches or steps are not acceptable.

l. Grind journal to dimensions and surface finish as shown in figure 1. Remove the chrome plate from the 0.031 in. radius.

WARNING

Heated parts will cause skin damage (burns). Use clean insulated gloves to handle parts.

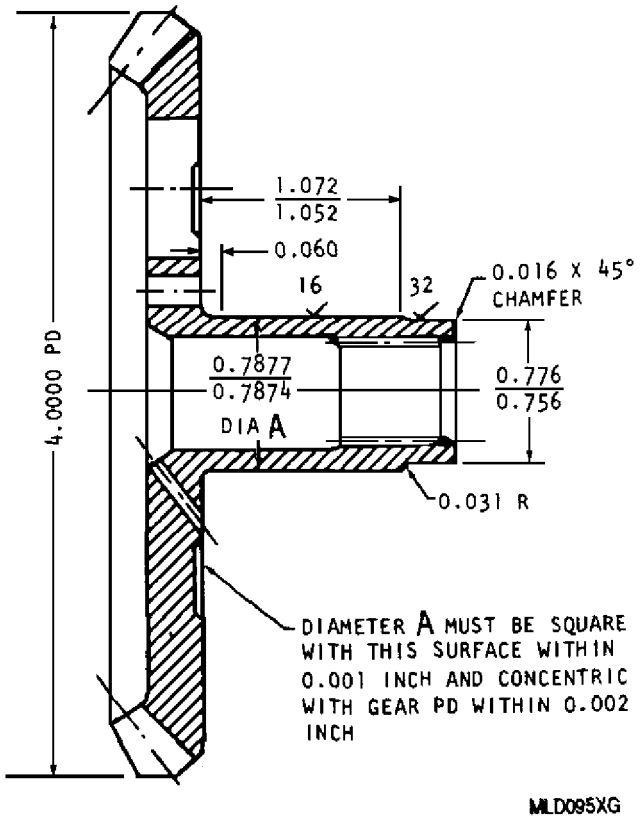

Figure 1. Compressor Side Gear Bearing Journal Repair

m. Stress relieve at 265−285°F (130−140°C) for five hours.

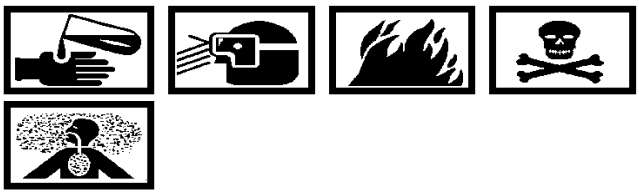

Dry Cleaning Solvent
MIL−PRF−680, Type II **3**

n. Degrease gear in MIL−PRF−680, type II dry cleaning solvent.

o. Spray wash gear with cold water. Air dry.

p. Visually inspect chrome plated area for bonding to base metal and for smooth finish.

DEPOT MAINTENANCE

INSPECTION, REPAIR, AND TESTING

COMPRESSOR DIFFUSER ASSEMBLY

Reference Material

Cleaning and Corrosion Treatment − Standard Practices . . . . . WP 008 00
Bearing Cages − General Inspection, Repair, and Replacement . . . . . WP 011 00
Magnetic Particle and Fluorescent Penetrant Inspection − Procedures . . . . . WP 017 00
Plating and Surface Treatment of Parts . . . . . WP 018 00
Pressure Testing, 25 psig . . . . . AMS 2602
Pressure Testing, 55 psig . . . . . AMS 2605
Pressure Testing, 100 psig . . . . . AMS 2607
Shot Peening . . . . . AMS 2430

Alphabetical Index

Subject **Page No.**

Compressor Diffuser Assembly 3
Alseal No. 585 Application 9
Bleed Port and Oil Tube Attaching Weld Repair 17
Combustion Inner Casing Sleeve Replacment 6
Dimensional Inspection 16
Front Baffle Installation 12
Front Ring and Baffle Installation 11
Front Ring and Baffle Machining 13
Inspection 3
Nickel − Cadmium Plating Stripping 9
Oil Tube Weld Repair 9
Pressure and Scavenge Oil Tubes and Vent Tube Repair 13
Pressure and Scavenge Oil Tubes Replacement 13

Alphabetical Index (contd)

Subject **Page No.**

Pressure Test 17
Repair 3
Repair Weld Shot Peening Procedure 16
Scavenge Oil Drain Pad and Drain Tube Pad Weld Repair 16
Stress Relief Procedures 15
Sump Scavenge Oil Tube Replacement 14
Weld and Crack Repair 10
Weld Repair Access Improvements 19
Introduction 3

Record of Applicable Technical Directives

None

1. **INTRODUCTION.**

2. This work package (WP) provides the instructions for inspection, repair, and testing of the compressor diffuser assembly used in the T56−A−427 turboprop engine.

3. **COMPRESSOR DIFFUSER ASSEMBLY.**

4. COMPRESSOR DIFFUSER ASSEMBLY − INSPECTION.

a. Clean compressor diffuser per WP 008 00.

b. Strip nickel−cadmium coating per paragraph 8, this WP, or Alseal No. 585 aluminum coating per WP 018 00.

c. Fluorescent Penetrant Inspect (FPI) compressor diffuser assembly per WP 017 00.

d. Inspect compressor diffuser assembly. Refer table 1.

5. COMPRESSOR DIFFUSER ASSEMBLY − REPAIR.

Support Equipment Required

Part No./Type Designation	Nomenclature
Local manufacture	Fixture, welding (material 410)
——	Gloves, Insulated

Materials Required

Specification No./Part No.	Nomenclature
Alseal No. 500	Coating, aluminum
Alseal No. 585	Paint, aluminum
AMS 5680	Wire, welding
AMS 5776	Wire, welding

a. Repair compressor diffuser assembly. Refer to disposition column, table 1.

b. Replace compressor diffuser assemblies not within serviceable limits after repair.

Table 1. Diffuser Assembly − Inspection and Repair

Condition	Serviceable Limits	Repairable Limits	Disposition
Cracks: Radial strut weld seams at oil sump and inner passage skin.	Not serviceable.	Any crack.	Repair diffuser per paragraph 10, this WP.
Radial strut weld seam at outer rim (1, figure 1).	3/8 in. max length. Cracks in weld visible only from inside radial strut are acceptable cracks; radial struts−3 places.	Exceeds serviceable limits.	Blend out and repair the weld. Install a weld fixture, material 410, to the diffuser−to−combustion outer case flange to prevent distortion. Use AMS 5680 welding wire. The notch in the strut trailing edge fairing may be enlarged to facilitate welding. Cool the weld in still air. Stress relieve per paragraph 17, this WP. Leave the weld fixture attached. Shot peen per paragraph 19, this WP. Check finished weld by local FPI or MPI. Inspect for flange distortion.

Table 1. Diffuser Assembly − Inspection and Repair (contd)

Condition	Serviceable Limits	Repairable Limits	Disposition
Cracks (contd)			
FPI or MPI indications in scavenge oil drain pad and drain tube pad.	Not serviceable.	Any crack.	Repair per paragraph 20, this WP.
Radial strut, extending from outer end weld seam (2, figure 1).	Not serviceable.	Any crack.	Stop drill at inner end of crack, using an 0.031 in. diameter drill, then weld repair. Remove a minimum amount of stock in preparation for welding. Use AMS 5680 welding wire. Cool the weld in still air. Check finished weld by local FPI spot check. Inspect for flange distortion.
Bleed port or oil tube attaching welds.	Not serviceable.	Any crack.	Repair per paragraph 21, this WP.
Porosity, laps and globular voids in welds.	Acceptable when positively identified as such.	Indications other than porosity, laps and globular voids.	Grind and reweld using inert gas and AMS 5776 welding wire.
Burrs or roughened machined surfaces.	Any damage.	Any damage.	Smooth−up any minor damage to remove burrs or roughness.
Front or rear flange warpage.	Within limits of figure 2.	Front: Minimum flange to bearing cage axial dimension in figure 2. Rear: Minimum flange thickness of 0.200 in.	Machine either flange face to meet squareness limit of figure 2.
Wear of combustion chamber inner casing sleeve.	Max of 6.2600 in. average ID with no abrupt diametral changes, grooves, steps or sharp edges.	Not repairable.	Replace sleeve per paragraph 6, this WP.
Pressure test: Check the assembly per paragraph 22, this WP, and figure 2.	No leakage, except as specified in figure 2.	Any leakage.	Repair per figure 3 and paragraphs 7 and 10, this WP.
Concentricity and dimensional check of diffuser assembly.	See figure 2.	Refer to paragraph 18, this WP.	Refer to paragraph 18, this WP.
Erosion at Fourteenth−Stage vane exit area, aft of Diameter P, figure 2.	Not serviceable.	Maximum rework depth 0.010 in. Maximum total erosion plus rework depth of 0.030 in.	Blend erosion to a smooth surface and apply Alseal No. 500 per WP 018 00.

Table 1. Diffuser Assembly − Inspection and Repair (contd)

Condition	Serviceable Limits	Repairable Limits	Disposition
Corrosion:			
Interior and exterior surface treatment damage, no longer an effective protection against corrosion.	Scattered pitting not exceeding 0.50 in. if areas are scattered and less than 10% of area is affected.	Exceeds serviceable limits.	Strip nickel−cadmium plate and apply Alseal No. 585 per paragraph 8 and 9, this WP.
Fourteenth−Stage vane locating pilot lip.	Pit depth must not exceed 0.070 in. if 90% of pilot lip is intact.	Exceeds serviceable limits.	Condemn diffuser.
Bearing cage ID:			
Wear and damage.	Maximum dia. of 4.3330 in. with an out−of−roundness not to exceed 0.001 in. FIR.	Exceeds serviceable limits.	Remove cage per WP 011 00. Inspect cage bore for wear and damage. Refer to bearing cage bore inspection for bearing cage installation instructions.
Bearing cage bore Diameter H (figure 2):			
Wear and damage.	Maximum diameter of 4.470 with an out−of−roundness not exceeding 0.0005 in. FIR.	4.490 in. diameter max.	For diameters 4.471 − 4.480 in., machine to remove wear and damage keeping material removal to a minimum. The following table shall be used to determine the amount of material to be removed in order to install an oversize cage and obtain the fit limits of figure 2. Refer to WP 011 00 for installation of cage. A bore that is 4.481 − 4.490 in. in diameter may be metallized per WP 011 00 and machined for a standard cage. Cage OD Size / Finished Bore Dia. Standard 4.469−4.470 +0.002 4.471−4.472 +0.004 4.473−4.474 +0.006 4.475−4.476 +0.008 4.477−4.478 +0.010 4.479−4.480

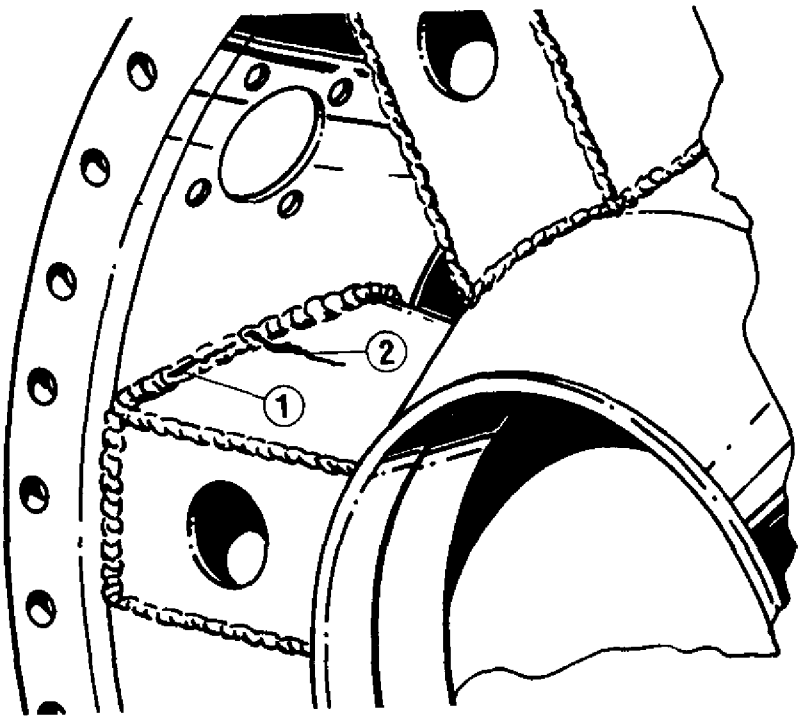

QMC055XD

Figure 1. Diffuser Radial Strut Crack Limits

6. COMPRESSOR DIFFUSER ASSEMBLY − COMBUSTION INNER CASING SLEEVE REPLACEMENT.

Support Equipment Required

Part No./Type Designation	Nomenclature
6799961	Plate, pressing

Materials Required

Specification No./Part No.	Nomenclature
No. 1372	Compound, sealing (Permatex)
Metco 405	Bonding material
Metcoloy No. 2	Wire, metal spray (CAGE 39918)
Sprabond	Agent, metal spray bonding (CAGE 39918)
6739977	Pin, locking (2)

a. Drill out the two sleeve pins. Do not permit drill to protrude through the sleeve bore into the sump.

b. Press the sleeve from the diffuser using 6799961 pressing plate (figure 4).

c. Remove any remaining pieces of the two sleeve pins.

d. Sleeves passing inspection can be reinstalled if they also pass the following criteria:

(1) Diameters in free state must be round within 0.015 in. FIR.

(2) Sleeve OD must be free of gouges or grooves that would allow leakage.

(3) Sleeve OD must: be cleaned, measured, and matched with a diffuser sleeve bore such that Diameter B (figure 5) is 0.008T − 0.005T in. and Diameter AF is 0.010L − 0.004L in. Diffuser bore may be machined or metallized to produce these dimensions.

e. Refer to figure 5 to determine if a standard or oversize sleeve is required. The diffuser bore may be machined for an oversize sleeve per figure 5 or metallized for a standard size sleeve as follows:

NOTE

The minimum wall thickness requirements in figure 5 also apply when sleeve bores are to be metallized.

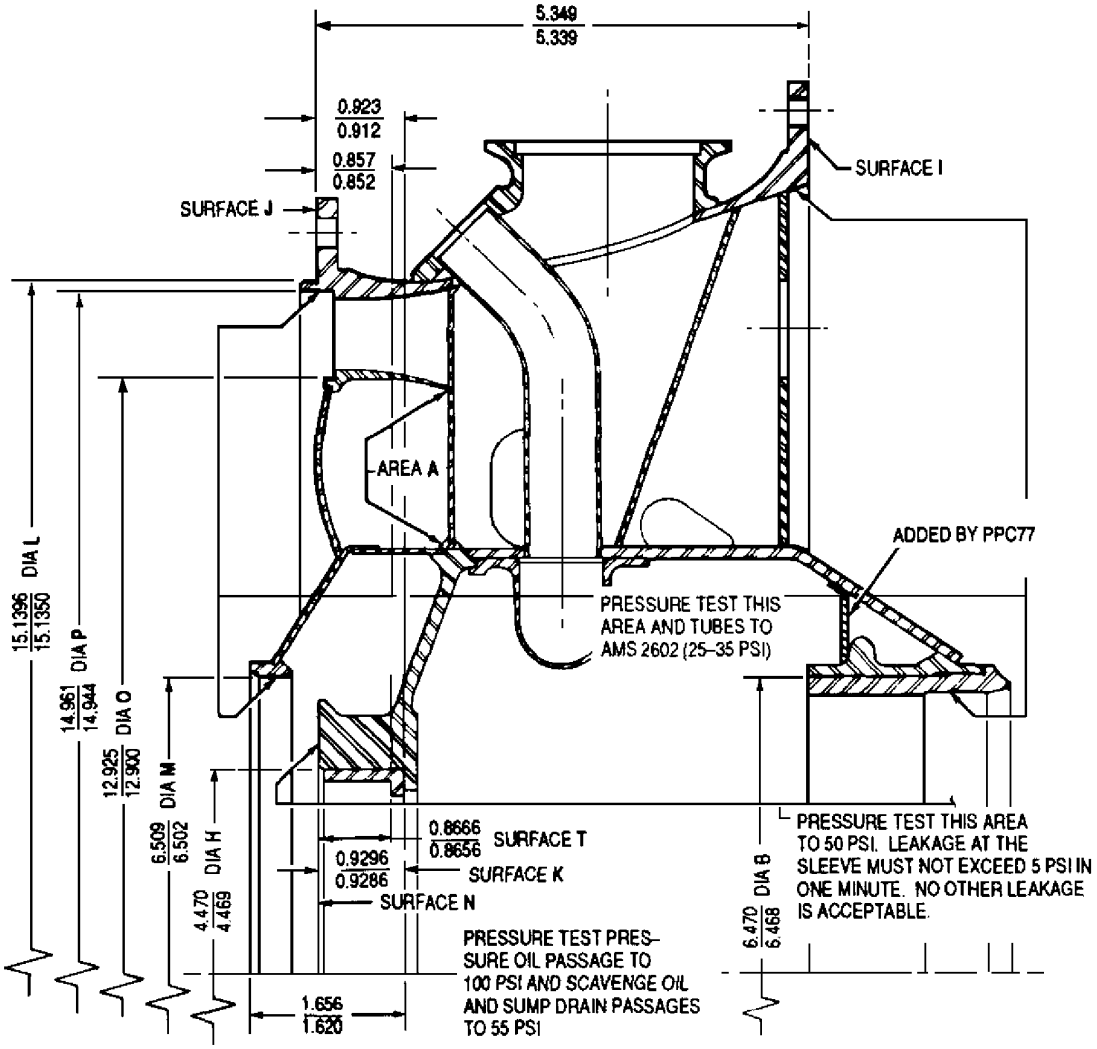

AXIS ESTABLISHED BY DIAMETER H AND SURFACE J MUST BE SQUARE WITHIN 0.002 IN.
SURFACE K MUST BE SQUARE WITH AXIS WITHIN 0.002 IN.
SURFACE I MUST BE SQUARE WITH AXIS WITHIN 0.005 IN.
DIAMETER L MUST BE CONCENTRIC WITH AXIS WITHIN 0.005 IN.
DIAMETER M MUST BE CONCENTRIC WITH AXIS WITHIN 0.003 IN.
DIFFERENCE BETWEEN MINIMUM AND MAXIMUM DIAMETER MUST NOT EXCEED 0.003 IN.
DIAMETER P MUST BE CONCENTRIC WITH AXIS WITHIN 0.010 IN.
DIAMETER O MUST BE CONCENTRIC WITH AXIS WITHIN 0.020 IN.
DIAMETER B MUST BE CONCENTRIC WITH AXIS WITHIN 0.005 IN.
TAPER IN DIAMETER M MUST NOT EXCEED 0.0005 IN.
DIAMETER H MAY BE MACHINED FOR OVERSIZE CAGE AND SO MARKED

MLCO92XA

Figure 2. Diffuser Inspection Limits

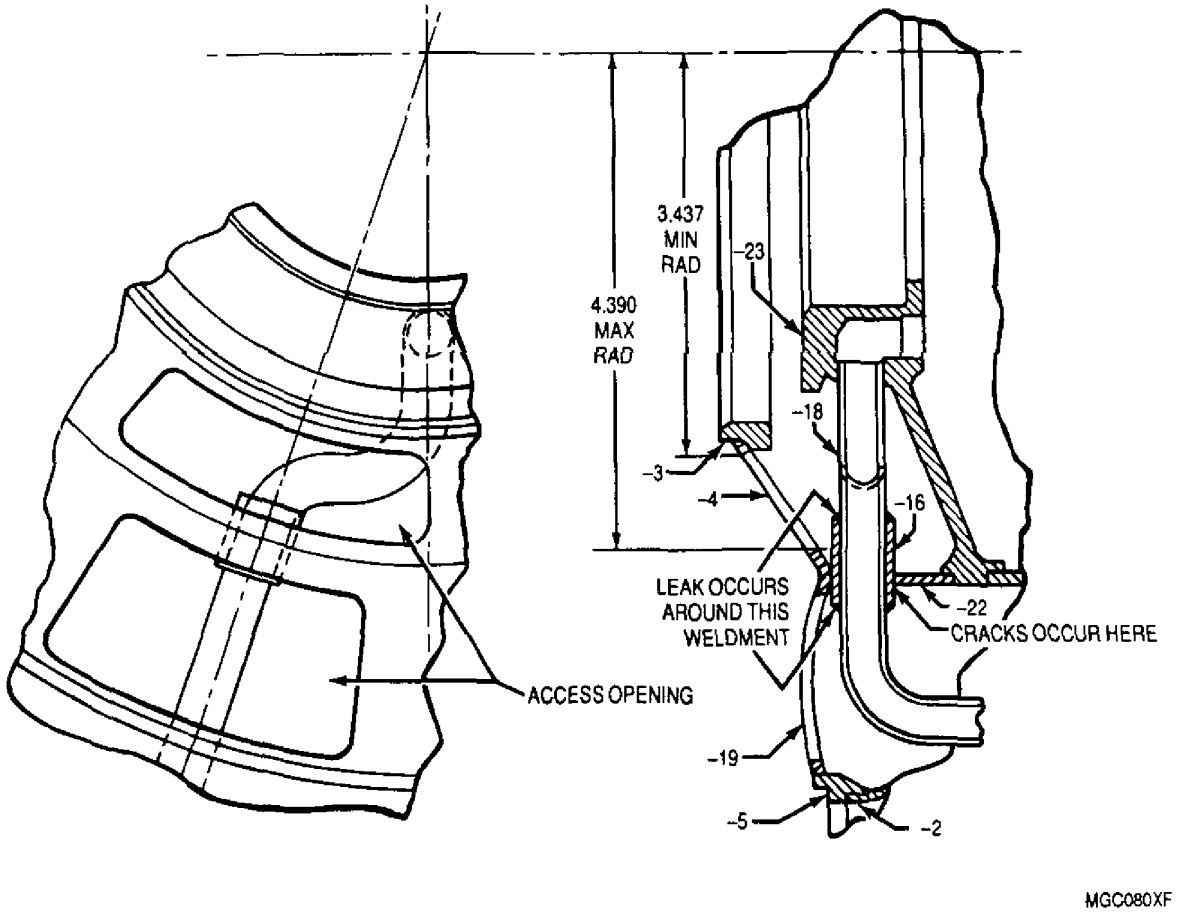

Figure 3. Diffuser Oil Tubes Weld Repair

(1) Machine the sleeve bore. Do not exceed 0.015 in. stock removal.

(2) Grit blast per local standard practice for metal spray repair.

(3) Metal spray the bore with Sprabond as a bonding agent to a thickness of 0.002 − 0.003 in. (Metco 405 may be used instead of Sprabond).

NOTE

Metal spray thickness alter finishing must not exceed 0.015 in.

(4) Apply a spray coat of Metcoloy No. 2 wire to a thickness that will allow machining and finishing to dimensions in figure 5.

f. Select a serviceable sleeve to obtain an ID of 6.222 − 6.2548 in. when installed.

g. Apply Permatex No. 1372 sealing compound to the outside diameter of the replacement sleeve.

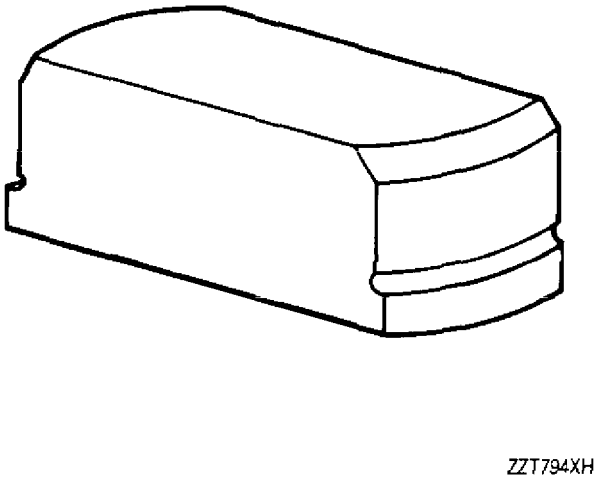

Figure 4. 6799961 Diffuser Inner Casing Sleeve Pressing Plate

WARNING

Heated parts will cause skin damage (burns). Use clean, insulated gloves to handle hot parts.

h. Heat the diffuser to approximately 300°F (149°C). Immediately install the new sleeve.

WARNING

Super chilled (frozen) parts will cause freezer burn. Use clean insulated gloves to handle dry ice and frozen parts.

i. Freeze sleeve if necessary to aid installation.

j. Drill two holes 0.091 − 0.093 in. in diameter and 0.234 in. deep. Use the holes in the sleeve as guide holes.

NOTE

Pin hole positions are optional except as determined by holes in sleeve.

k. Select 6739977 pins for drive fit and stake metal over lightly on each pin.

l. The sleeve ID must be concentric with the diffuser bearing cage ID within 0.005 in. FIR and square with rear flange within 0.002 in. FIR.

m. Pressure test the sleeve installation per figure 2 and paragraph 22, this WP.

7. COMPRESSOR DIFFUSER ASSEMBLY − OIL TUBE WELD REPAIR.

Materials Required

Specification No./Part No.	Nomenclature
AMS 5680	Wire, welding

a. Refer to paragraph 23, this WP, to improve access for repair as necessary.

b. Remove weld in area of leak. Inspect machined area for thinning and remove burrs and sharp edges.

c. Weld repair leak using inert gas and AMS 5680 welding wire.

d. Recheck the tubes for leaks per paragraph 22, this WP.

e. Form, assemble, and install a patch to cover the access opening per paragraph 23, this WP.

f. Stress relieve per paragraph 17, this WP.

8. COMPRESSOR DIFFUSER ASSEMBLY − NICKEL − CADMIUM PLATING STRIPPING.

Materials Required

Specification No./Part No.	Nomenclature
O−N−350	Acid, nitric

a. Remove the combustion inner casing sleeve per paragraph 6, this WP, and the bearing cage. Remove sealing residue from ID of sleeve bore.

WARNING

Be sure to remove all nickel−cadmium (ni−cad) plating. Plating will emit poisonous gases if weld repaired.

Nitric Acid O−N−350 **62**

b. Strip plating with O−N−350 nitric acid in an aluminum or lead lined tank at room temperature.

c. Submerge diffuser in water and agitate.

d. Pressure rinse part with hot water.

e. Dry in oven at 150°F (66°C) for two hours.

9. COMPRESSOR DIFFUSER ASSEMBLY − ALSEAL NO. 585 APPLICATION.

Support Equipment Required

Part No./Type Designation	Nomenclature
6798815	Mask, scavenge sump

Materials Required

Specification No./Part No.	Nomenclature
Alseal No. 585	Paint, aluminum

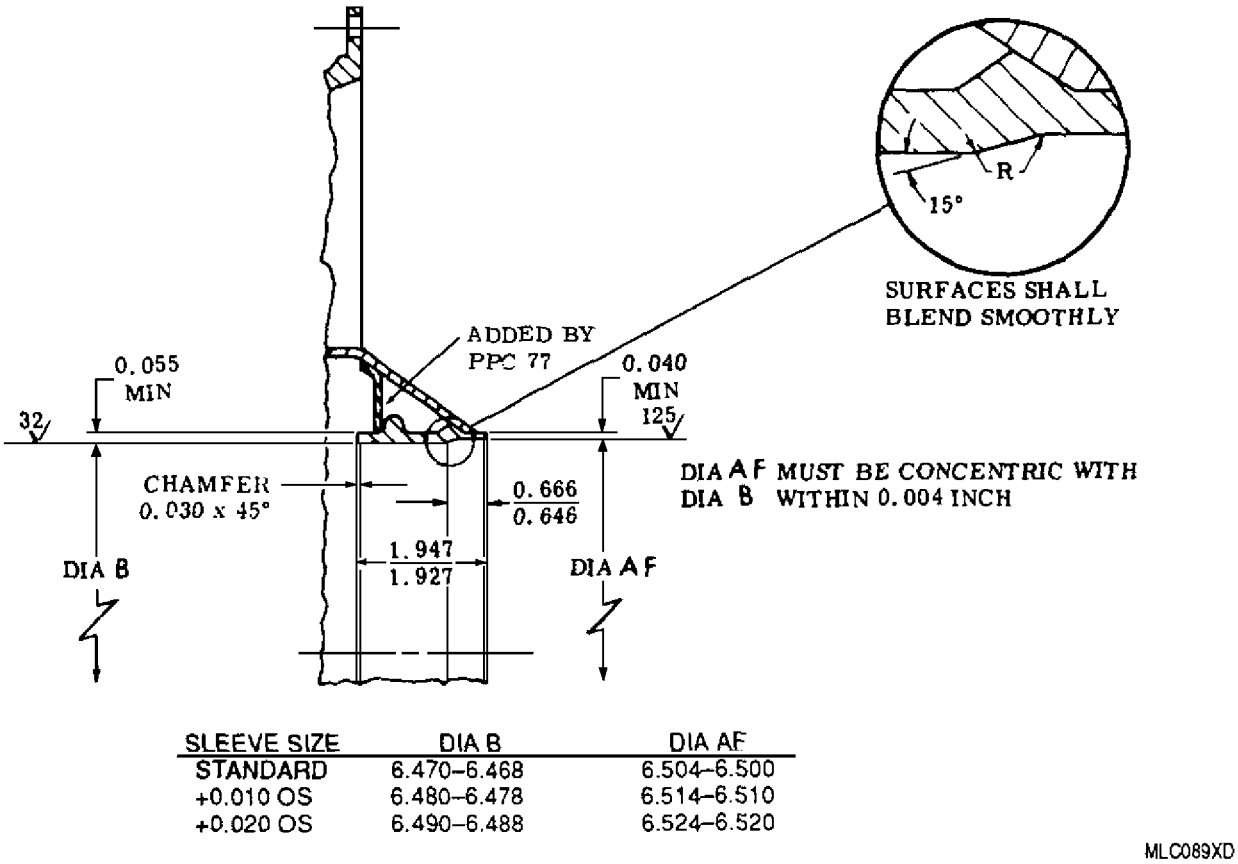

SLEEVE SIZE	DIA B	DIA AF
STANDARD	6.470–6.468	6.504–6.500
+0.010 OS	6.480–6.478	6.514–6.510
+0.020 OS	6.490–6.488	6.524–6.520

Figure 5. Diffuser Sleeve Bore Machine Limits

CAUTION

The oil sump oil passages, the three oil tube mounting pads, and the breather tube mounting pad must not be painted with Alseal No. 585.

a. Prior to Alseal No. 585 aluminum paint application, mask the following surfaces:

(1) All threads.

(2) Diffuser sump area. Use 6798815 scavenge sump mask (figure 6).

(3) Four oil passages and pads, located on the diffuser O.D. at the 1, 5, 7, and 11 o'clock positions.

(4) All other mating surfaces.

(5) All flange holes.

b. Apply Alseal No. 585 per WP 018 00.

10. COMPRESSOR DIFFUSER ASSEMBLY − WELD AND CRACK REPAIR.

Support Equipment Required

Part No./Type Designation	Nomenclature
6799892	Fixture, ring and clamp

Materials Required

Specification No./Part No.	Nomenclature
AMS 5776	Wire, welding
——	Brush, wire, corrosion resistant

a. Refer to paragraph 23, this WP, as necessary to improve access to cracks for repair.

b. Install 6799892 ring and clamp fixture (figure 7) in compressor outlet vane recess.

c. All welding shall be by the inert gas arc method, using AMS 5776 welding wire.

d. Repair cracks in the sump skin as follows:

(1) Grind along each crack to form a U−groove.

(2) Groove depth shall be 2/3 − 3/4 the material thickness and shall extend beyond the ends of each crack.

(3) Weld repair crack.

NOTE

Add sufficient weld rod material to ensure having a convex weld surface.

e. Repair cracks in the strut to sump weldment around the inside of the strut as follows:

(1) Clean exposed interior (Area A, figure 2) at strut to sump area by sand blasting and wire brushing (corrosion resistant brush).

(2) Add a 3/16 in. fillet weld around the outside of the forward half of strut. Start the fillet on each side of strut as far rearward as welding equipment will permit and progress forward.

NOTE

Weld length to be 1 1/2 in. minimum front and rear. Total length shall be approximately 4 in. for sides and nose.

(3) Cracks in the weld inside the strut shall be left as is.

f. Repair cracks in the strut to sump weldment around the outside of the strut as follows:

(1) Clean exposed interior (Area A, figure 2) at strut to sump area by sand blasting and wire brushing (corrosion resistant brush).

(2) Blend by grinding a U−groove shaped preparation along and extending beyond the crack.

(3) Start the weld at the rear of the crack preparation and progress forward, ending the weld at the nose.

(4) Strut to sump areas that are not cracked will be left as is.

g. Perform all other repairs as may be required. Refer to paragraph 23, this WP, for repair of access openings and installation of baffles.

h. Remove ring and clamp fixture from diffuser.

i. Pressure test the sump area seal cavity and tubes per paragraph 22, this WP. No leakage is allowed. Repair weld if leakage exists.

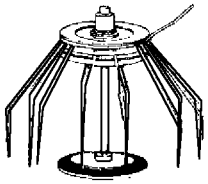

ZZT793XJ

Figure 6. 6798815 Diffuser Scavenge Sump Mask

j. Fluorescent penetrant inspect the repaired areas. Weld repair crack indications.

k. Visually inspect welds and pressure check per paragraph 22, this WP. Weld repair if leakage exists.

l. After all weld repair of the diffuser has been completed, the following steps shall be accomplished:

(1) Stress relieve per paragraph 17, this WP.

(2) Inspect diffuser per paragraph 18, this WP.

(3) Shot peen repair welds per paragraph 19, this WP.

(4) Coat with Alseal No. 585 per paragraph 9, this WP.

(5) Install combustion inner casing sleeve per paragraph 6, this WP. Install bearing cage.

11. COMPRESSOR DIFFUSER ASSEMBLY − FRONT RING AND BAFFLE INSTALLATION.

Support Equipment Required

Part No./Type Designation	Nomenclature
6799891	Fixture, welding
6799892	Fixture, ring and clamp

Materials Required

Specification No./Part No.	Nomenclature
AMS 5776	Wire, welding

a. Install 6799892 ring and clamp fixture in compressor outlet vane recess.

b. Position the ring and baffle in diffuser with 6799891 diffuser welding fixture.

c. Apply enough pressure to hold part in place.

d. Weld baffle in place using AMS 5776 welding wire. Refer to figure 7.

e. Stress relieve per paragraph 17, this WP.

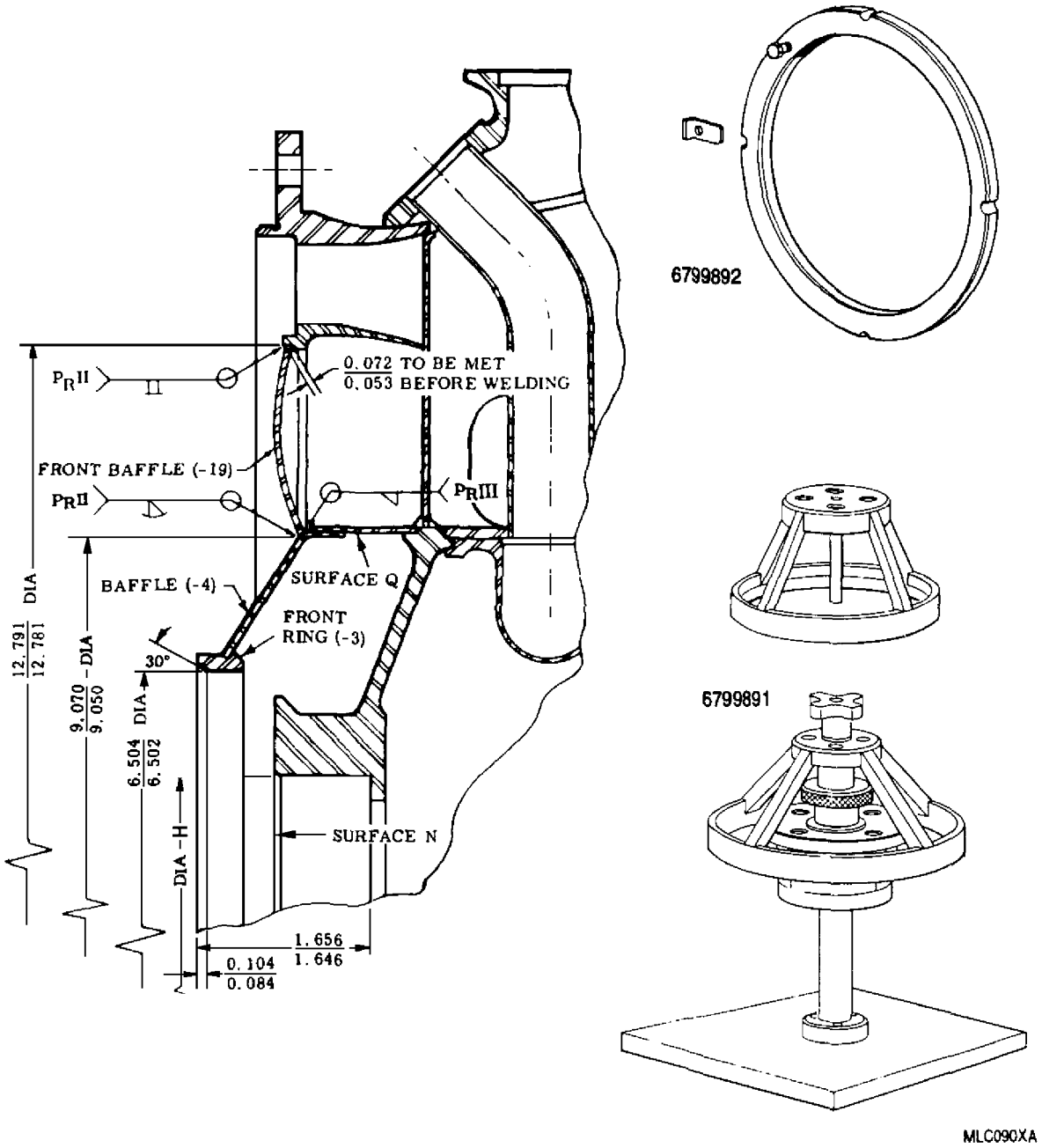

Figure 7. Diffuser Front Ring and Baffle, and Front Baffle Installation

12. COMPRESSOR DIFFUSER ASSEMBLY − FRONT BAFFLE INSTALLATION.

Support Equipment Required

Part No./Type Designation	Nomenclature
6799891	Fixture, welding
6799892	Fixture, ring and clamp

Materials Required

Specification No./Part No.	Nomenclature
AMS 5776	Wire, welding

a. Install 6799892 ring and clamp fixture in the compressor outlet vane recess.

b. Position front baffle in diffuser with 6799891 welding fixture.

c. Apply only enough pressure to hold part in place.

d. Tack weld part at outer and inner diameters, then weld all around per figure 7 using AMS 5776 welding wire.

e. Stress relieve per paragraph 17, this WP.

13. COMPRESSOR DIFFUSER ASSEMBLY − FRONT RING AND BAFFLE MACHINING.

a. Machine ring ID and face to dimensions shown on figure 7.

b. Ring ID must be concentric with Diameter H within 0.002 in. FIR.

14. COMPRESSOR DIFFUSER ASSEMBLY − PRESSURE AND SCAVENGE OIL TUBES AND VENT TUBE REPAIR.

a. Pressure and scavenge oil tubes can either be replaced per paragraph 15, this WP, or repaired per figure 3 and paragraph 10, this WP.

b. Repair vent tube cracks per paragraph 10, this WP.

15. COMPRESSOR DIFFUSER ASSEMBLY − PRESSURE AND SCAVENGE OIL TUBES REPLACEMENT.

Materials Required

Specification No./Part No.	Nomenclature
O−A−51	Acetone
AMS 5776	Wire, welding
——	Grit, No. 280 mesh

a. Remove the diffuser front ring and baffle, and front baffle. Refer to paragraph 23, this WP.

b. Remove pressure or scavenge oil tube as follows:

(1) Drill out the opening at the mounting flange to a depth of 0.250 in. with a 0.434 in. diameter drill.

(2) Remove attaching weld at center of tube by grinding.

(3) Cutoff tube as close to the hub as possible.

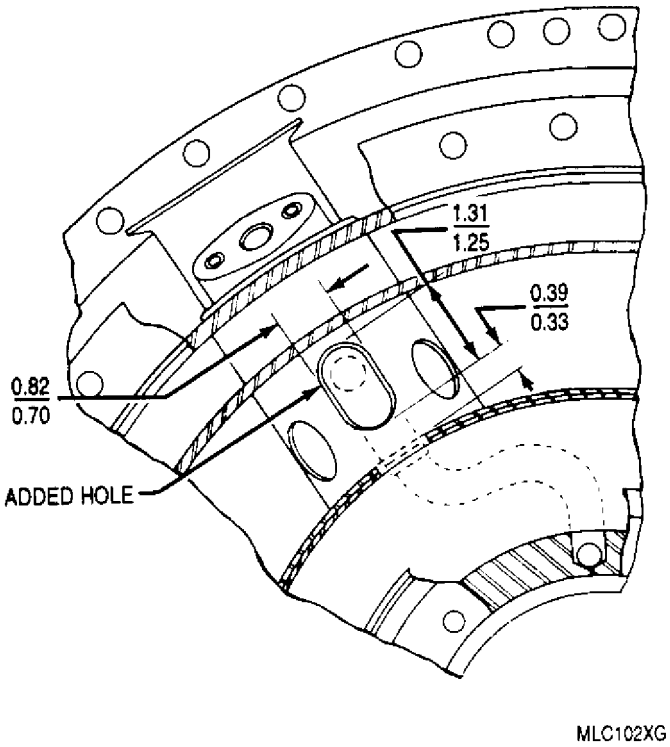

Figure 8. Diffuser Strut Hole Location Required for Pressure and Scavenge Oil Tubes

(4) Drill out the opening at the hub to a depth of 0.375 in. from the hub OD, with a 0.434 in. diameter drill.

NOTE

All tube material must be removed, from the holes in the mounting flange and hub.

c. Inspect and repair internal cracks per paragraph 10, this WP.

NOTE

Replacement oil tubes may require an elongated hole in struts from which tubes were removed. When required, enlarge the holes within limits of figure 8.

d. Position replacement pressure oil tube, into the upper left strut or a service replacement scavenge on tube, into the lower left strut, as viewed from diffuser front.

NOTE

Tube to strut clearance must be at least 0.030 in. Grind strut, when necessary, to meet the required clearance.

Acetone O−A−51 **61**

e. Wet grit blast areas to be welded with No. 280 mesh grit,then clean using O−A−51 acetone.

f. Weld the tubes in position per figures 9 and 10 using AMS 5776 welding wire.

g. Pressure check the pressure and scavenge tubes per paragraph 22, this WP.

h. Install the front ring and baffle, and front baffle per paragraph 11 and 12, this WP.

i. Stress relieve per paragraph 17, this WP.

j. Machine the front ring and baffle per paragraph 13, this WP.

k. Machine any weld material buildup on the oil tube flanges per paragraph 20, this WP.

l. FPI all repair welds and repair if cracked.

m. Inspect diffuser per paragraph 18, this WP.

16. COMPRESSOR DIFFUSER ASSEMBLY − SUMP SCAVENGE OIL TUBE REPLACEMENT.

Materials Required

Specification No./Part No.	Nomenclature
AMS 5776	Wire, welding
O−A−51	Acetone
——	Grit, No. 280 mesh

a. Remove sump scavenge oil tube as follows:

NOTE

Secure tube during drilling operation, to ensure that it does not fall into diffuser cavity. A sight angle drill attachment is required to gain access to sump area opening.

(1) Use a counterbore drill of sufficient size to ensure a snug fit of “S” shaped replacement tube.

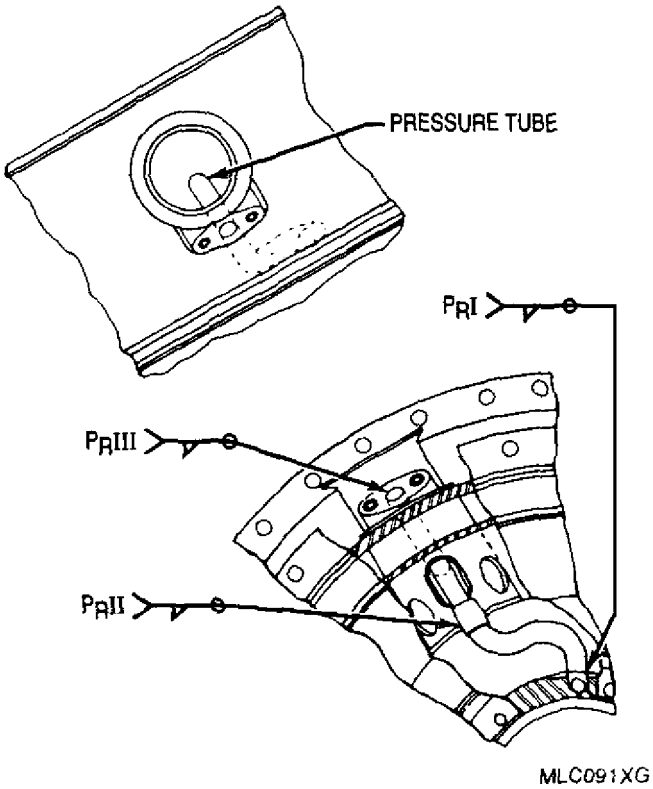

Figure 9. Diffuser Pressure Oil Tube Installation

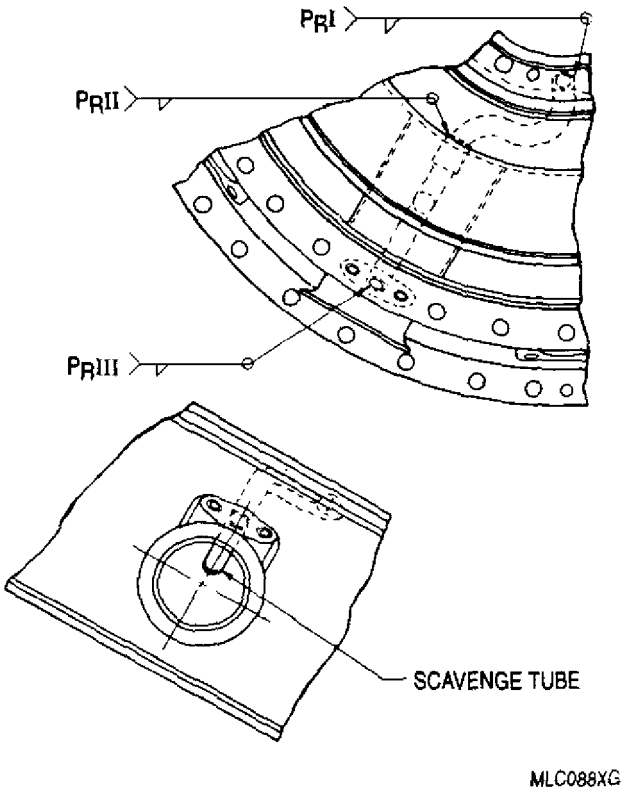

Figure 10. Diffuser Scavenge Oil Tube Installation

(2) Pilot on tube ID and drill out mounting flange pad opening to a depth of 0.250 in. and sump area opening to a depth of 0.125 in. This depth is sufficient to remove weld and free tube.

(3) Remove tube through Fourteenth−Stage bleed port and discard.

NOTE

All tube material must be removed from holes in mounting flange pad and sump.

b. Install service replacement diffuser sump scavenge oil tube as follows:

Acetone O−A−51 **61**

(1) Wet grit blast areas to be welded with no. 280 mesh grit, then clean with O−A−51 acetone.

(2) Position replacement tube in diffuser as shown in figure 11.

(3) Insert a 0.250 in. diameter copper rod into ID at both ends of tube prior to welding.

NOTE

Be sure that tube is retained in proper position during welding process.

(4) Using AMS 5776 welding wire and inert gas arc method, weld tube in place as shown in figure 11.

(5) Remove copper rods from ends of tube and remove any weld buildup on oil tube mounting flange pad surface. Mounting pad surface finish shall be at least 40 RMS and flat within 0.002 in. Break any sharp edges to a radius of 0.010 in.

(6) The opening through welded portions of tube shall pass a 0.250 in. diameter ball.

(7) Stress relieve per paragraph 17, this WP.

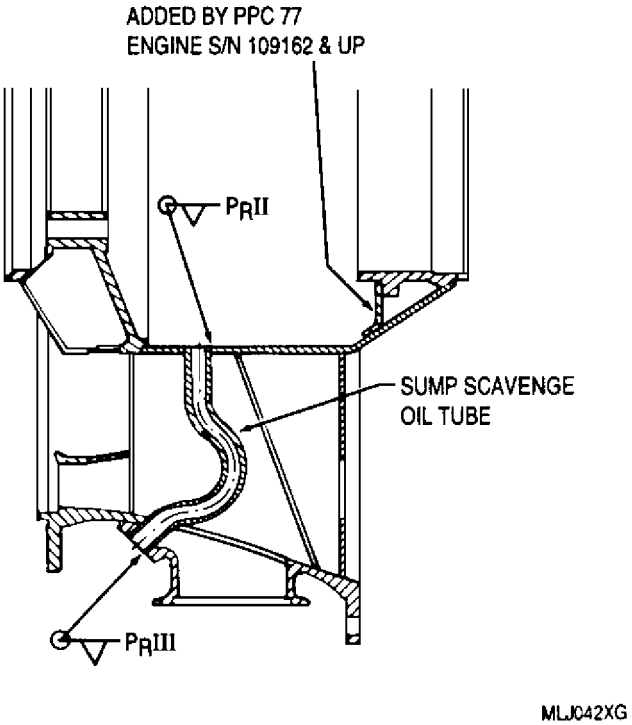

Figure 11. Diffuser Sump Scavenge Oil Tube Installation

(8) Pressure test sump area and replacement sump scavenge oil tube per paragraph 22, this WP, step e.

17. COMPRESSOR DIFFUSER ASSEMBLY − STRESS RELIEF PROCEDURE.

Support Equipment Required

Part No./Type Designation	Nomenclature
6799892	Fixture, ring and clamp

NOTE

Compressor diffuser shall be stress relieved after any weld repair.

a. Install 6799892 ring and clamp fixture in compressor outlet vane recess (figure 7).

b. Position the diffuser in a furnace for the most uniform heating; support the diffuser under the trailing edges of the struts or strut fairing.

c. Stabilize furnace at 600 − 800°F (316−427°C) for 30 minutes. Increase temperature to 1000°F (538°C) in a minimum time of 1.5 hours and hold for two hours at 1000°F ± 25°F (538°C ± 14°C).

WARNING

Heated parts will cause skin damage (burns). Use clean, insulated gloves to handle hot parts.

d. Furnace cool diffuser to 800°F (427°C) or below. Remove diffuser and air cool to room temperature.

e. Pressure test per paragraph 22, this WP.

18. COMPRESSOR DIFFUSER ASSEMBLY − DIMENSIONAL INSPECTION.

Support Equipment Required

Part No./Type Designation	Nomenclature
6799595	Fixture, concentricity checking

NOTE

NADEP Alameda check fixture, part No. 611−3−222, may be used in lieu of Allison concentricity checking fixture, part No. 6799595.

a. Mount each compressor diffuser in 6799595 concentricity checking fixture (figure 12) and inspect to limits in figure 2.

b. Out−of−limit diffusers may be reworked as follows:

(1) Diameter L and P may be machined.

(2) The pilot lip Diameters L and P may be cold rolled to reduce machining requirements. Radial displacement of metal must not exceed 0.015 in. FPI the lip for cracks after cold rolling.

(3) Surface J to T dimension maybe a minimum of 0.842 in. in local areas which must not exceed a three−bolt hole segment. If this dimension can not be maintained, remove the cage and machine Surface K. Metal removal shall be held to a minimum; do not machine the surface in excess of 0.010 in.

(4) Maintain the dimension between Surfaces N and T by removal of metal from Surface N.

(5) Surface J may be machined to a minimum thickness of 0.200 in. to maintain the squareness limit of Diameter H and Surface J.

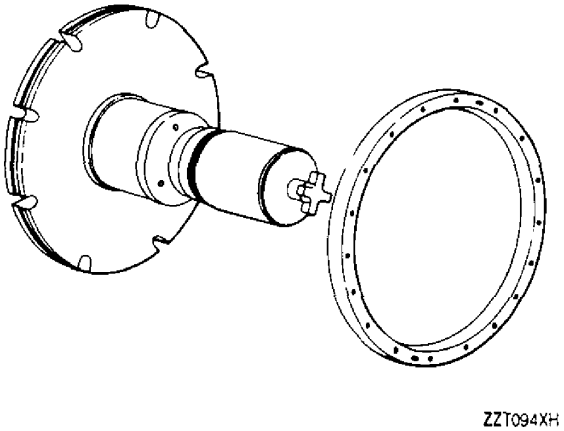

Figure 12. 6799595 Concentricity Checking Fixture

(6) Rear flange out−of−flat tolerance shall not exceed 0.012 in. at strut locations and 0.016 in. at other locations.

(7) Surface I may be machined to maintain squareness limit with J. Rear flange thickness shall not be less than 0.200 in. after machining.

(8) Diameter M may be machined or metallized to maintain limits. Metal spray thickness after finish machining shall not exceed 0.030 in.

19. COMPRESSOR DIFFUSER ASSEMBLY − REPAIR WELD SHOT PEENING PROCEDURE.

Support Equipment Required

Part No./Type Designation	Nomenclature
AISI 1069	Wire, steel
——	Grit, no. 280 mesh

a. Shot peen using stabilized shot at 0.025 in. diameter, cut from AISI 1069 steel wire. Peening intensity to be 10A (minimum arc height of 0.1010 in. on an Almen A specimen as measured on the standard Almen No. 2 gage). Refer to AMS 2430.

b. Confine the shot peen to an area extending 1/2 in. to each side of the repair weld.

c. Wet grit blast using no. 280 mesh grit under 100 psi air pressure following shot peening.

20. COMPRESSOR DIFFUSER ASSEMBLY − SCAVENGE OIL DRAIN PAD AND DRAIN TUBE PAD WELD REPAIR.

Materials Required

Specification No./Part No.	Nomenclature
AMS 5784	Wire, welding

a. Crack indications on the scavenge oil drain tube pad and the scavenge oil drain pad are to be repaired as follows:

(1) Machine out indications from affected area.

(2) Inspect via visual penetrant inspection method or FPI to be sure all indications are removed.

(3) Using the metallic arc or inert gas arc method, weld the machined−out area with AMS 5784 welding wire.

(4) Stress relieve per paragraph 17, this WP.

(5) Machine, to smooth any weld buildup on pad face, so that pad is not more than 1/4 in. thick and a finish of 40 RMS is obtained. Welded area at the tube ID must pass a 0.281 in. diameter ball.

(6) Inspect via visual penetrant inspection method or FPI to be sure that no indications exist in the repaired area.

b. Pressure test the repaired area per paragraph 22, this WP. Repeat steps a and b if any leakage exists.

21. COMPRESSOR DIFFUSER ASSEMBLY − BLEED PORT AND OIL TUBE ATTACHING WELD REPAIR.

Materials Required

Specification No./Part No.	Nomenclature
AMS 5776	Wire, welding

a. Remove crack indications by grinding.

b. Weld repair using gas tungsten arc weld method (GTAW) and AMS 5776 welding wire. Amperage shall not exceed 70 amps. Length of weld pass shall not exceed 2.0 in. After each pass, cool part to room temperature with air or a damp cloth.

c. Stress relieve per paragraph 17, this WP.

d. FPI the weld repair per WP 017 00 and perform pressure check per paragraph 22, this WP.

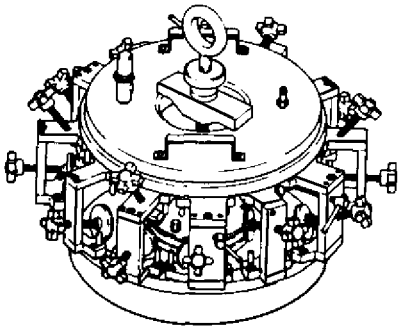

Figure 13. 6799572 Diffuser Pneumatic Pressure Test Fixture

22. COMPRESSOR DIFFUSER ASSEMBLY − PRESSURE TEST.

Support Equipment Required

Part No./Type Designation	Nomenclature
ALA 3D−71163	Tool pressure check
ALA 3D−71163−1	Plate assembly
ALA 3D−71163−2	Plate assembly
ALA 3D−71163−3	Bolt assembly
6787326	Cover
6799572	Fixture, pressure test
6849586	Cover

NOTE

The following sequence of operations is used to minimize the handling of the various tool subassemblies when complete pressure test of all passages and areas is required. If any one area or passage requires test, use only that part of the sequence which pertains. Pressure tests shall be accomplished with diffuser fitted with recommended tools and while subjected internally to specified air pressure; diffuser shall be submerged in tap water. A high−concentrate of soap solution, or equivalent, applied with a squeeze type bottle can be used to localize leak areas after diffuser has been removed from submerging tank.

All referenced detail dash numbers, enclosed in parentheses, are subassemblies of 6799572 pressure test fixture (figure 13).

a. Pressure oil line test:

(1) Position diffuser on a table, rear flange down, so that the three bleed ports with their adjacent oil tubes are at the 5, 7, and 11 o’clock positions.

(2) Install the seal bracket (detail −204) or cover, P/N 6787326, at the 11 o'clock position; clamp pad over the oil tube only.

(3) Install the seal clamp (detail −212) in the bearing cage bore oil hole (12 o'clock position) with the clamp handle up and securely clamped.

(4) Pressure test the oil passage per AMS 2607 at a pressure of 100 psi. Leakage is not acceptable.

(5) Remove the detail −204 or P/N 6787326 and detail −212 subassemblies.

b. Scavenge oil line test:

(1) Position diffuser on a table, rear flange down, so that the three bleed ports with their adjacent oil tubes are at the 5, 7, and 11 o'clock positions.

(2) Install the seal bracket (detail −204) or cover, P/N 6787326, at the 7 o'clock position; clamp pad over the oil tube only.

(3) Install the seal clamp (detail −212) in the bearing cage bore oil hole (6 o'clock position) with the clamp handle up and securely clamped.

(4) Pressure test the scavenge oil passage per AMS 2605 at a pressure of 55 psi. Leakage is not acceptable.

(5) Remove the detail −204 or P/N 6787326 and detail −212 subassemblies.

c. Labyrinth seal vent area and vent tube pressure test:

NOTE

Weld repair of vent area and vent tubes requires removal of front baffle (−19, figure 7) and possibly front ring and baffle (−3) and (−4). Front ring and baffle must be in place to pressure test vent area and vent tubes when using 6799572 pressure test fixture. Weld repairs in this area or to vent tubes should always be pressure tested prior to front baffle replacement. When ring and baffle are removed, use ALA 3D−71163 Alameda pressure check tool where possible to pressure test vent area and vent lines. Refer to step d when using Alameda tooling.

(1) Mount the adapter assembly (detail −213) on the inner hub of the base assembly (detail −201). All O−rings must be seated and the bolt secured with the two thumb screws (detail −67).

NOTE

If the combustion inner casing sleeve is not installed in the diffuser rear bore, substitute adapter assembly (detail −214) for adapter assembly (detail −213).

(2) Place the diffuser, rear flange down, on the base assembly (detail −201).

(3) Install the labyrinth seal cavity cover (detail −211) in the diffuser front bore. Secure the assemblies by tightening the lifting eye.

(4) Install two seal brackets (detail −206) on the labyrinth seal vent pads, located at the three and nine o'clock positions.

(5) Pressure test the seal vent area and vent tubes per AMS 2602 at a pressure of 25 psi. Leakage is not acceptable.

(6) Remove the seal cavity cover (detail −211) and the two seal brackets (detail −206).

d. Labyrinth seal vent area and vent tubes test using Alameda ALA 3D−71163 pressure check tool:

NOTE

The following procedure applies only to diffusers with −19 (figure 3) front baffle and front ring and baffle−3 (figure 7) and −4 removed.

(1) Place diffuser, rear flange down, on ALA 3D 71163−2 plate assembly so that three bleed ports with their adjacent oil tubes are at the 5, 7, and 11 o'clock positions.

(2) Install ALA 3D−71163−1 plate assembly to seal against Surfaces N and Q (figure 7). Secure assemblies with ALA 3D−71163−3 bolt assembly.

(3) Install two seal brackets (detail −206) on labyrinth seal vent pads located at 3 and 9 o'clock positions.

(4) Pressure test seal vent area and vent tubes per AMS 2602 at a pressure of 25 psi. Leakage is not acceptable.

(5) Remove ALA 3D−71163−1 and −2 plate assemblies and two seal brackets (detail −206).

e. Sump area and sump drain tube test:

(1) Mount the adapter assembly (detail −213 or −214) as outlined in step c.

(2) Place the diffuser, rear flange down, on the base assembly (detail −201). Position diffuser so that the three bleed ports with their adjacent oil tubes are at the 5, 7, and 11 o'clock positions.

(3) Install the seal assembly (detail −210) in the bearing cage bore. Secure the assemblies by tightening the lifting eye.

(4) Install three seal brackets (detail −204) or cover, P/N 6787326, at the 5, 7, and 11 o'clock positions. Clamp pads over the oil tubes only.

(5) Install the seal bracket (detail −209) or cover, P/N 6849586, over the sump breather tube outlet at the one o'clock position. Seal off the breather tube outlet only.

(6) Pressure test the sump area and sump drain tube per figure 2.

(7) Remove the detail −210, −209, or P/N 6849586 and the three detail −204 or P/N 6787326 subassemblies.

f. Air passage area test:

(1) Place the diffuser, rear flange down, on the base assembly (detail −201). Position diffuser so that the three bleed ports with their adjacent oil tubes are at the 5, 7, and 11 o'clock positions.

(2) Install the cap assembly (detail −202) against the diffuser front flange. Install clamp assembly (detail −203) and secure by tightening the lifting eye.

(3) Install the four cover assemblies (detail −216) over each of the bleed ports, 1, 5, 7, and 11 o'clock positions.

(4) Install two seal brackets (detail −208) at the 2 and 8 o'clock positions over the fuel nozzle openings and adjacent vent holes.

(5) Install two seal brackets (detail −207) at the 4 and 10 o'clock positions over the fuel nozzle openings and adjacent vent holes.

(6) Install two seal brackets (detail −205) at the 6 and 12 o'clock positions over the fuel nozzle openings.

(7) Install eight plugs (detail −215) in the tapped holes at the 1, 5, 7, and 11 o'clock positions.

(8) Pressure test the air passage areas per figure 2. Leakage is not acceptable.

23. COMPRESSOR DIFFUSER ASSEMBLY − WELD REPAIR ACCESS IMPROVEMENT.

Materials Required

Specification No./Part No.	Nomenclature
AMS 5776	Wire, welding

a. Access to repair areas may be improved by the following means:

(1) Cutting a 1.063 in. by 3.5 in. opening in the front baffle (−19 detail) per figure 3.

(2) Cutting a 1.5 in. by 3.5 in. opening in the baffle (−4 detail) per figure 3.

(3) Removing either or both baffles by machining as follows:

(a) Use a light machine cut.

(b) Remove any remaining plate or baffle and weld material by burring.

(c) FPI diffuser assembly after baffle has been removed.

(4) Removing the oil vent baffle or elbow.

(5) Cutting the −2 detail to allow bending.

b. After repairs have been accomplished, perform the following steps as necessary:

(1) Form and install patches to cover access openings. Weld patches in place using inert gas and AMS 5776 welding wire.

(2) Weld repair −2 detail.

(3) Weld in new oil vent baffle or elbow.

(4) Stress relieve per paragraph 17, this WP.

(5) Install diffuser front ring and baffle or front baffle (repair parts) per paragraphs 11 and 12, this WP.

c. FPI new welds per WP 017 00.

DEPOT MAINTENANCE

INSPECTION AND REPAIR

COMPRESSOR REAR BEARING LABYRINTH SEAL

Reference Material

Magnetic Particle and Fluorescent Penetrant Inspection − Procedures . . . . . WP 017 00
Plating and Surface Treatment of Parts . . . . . WP 018 00
Plating, Silver, Nickel Strike, High Bake . . . . . AMS 2410
Plating, Electroless Nickel . . . . . AMS 2404
Plating, Chromium (Electrodeposited) . . . . . QQ−C−320

Alphabetical Index

Subject **Page No.**

Compressor Rear Bearing Labyrinth Seal 2
Chrome Plating 2
Inspection 2
Repair 2
Introduction 2

Record of Applicable Technical Directives

None

1. **INTRODUCTION.**

2. This work package (WP) provides the instructions for inspection and repair of the compressor rear bearing labyrinth seal used on the T56−A−427 turboprop engine.

3. **COMPRESSOR REAR BEARING LABYRINTH SEAL.**

4. COMPRESSOR REAR BEARING LABYRINTH SEAL − INSPECTION.

Support Equipment Required

Part No./Type Designation	Nomenclature
6799629	Fixture, checking, labyrinth seal, compressor rear
6799631	Set, gage, depth, stator step, labyrinth seal, compressor rear

a. Inspect compressor rear bearing labyrinth seal. Refer to tables 1 and 2.

b. Refer to WP 017 00 for fluorescent penetrant inspection (FPI) procedures.

5. COMPRESSOR REAR BEARING LABYRINTH SEAL − REPAIR.

Support Equipment Required

Part No./Type Designation	Nomenclature
6799632	Fixture, machining, secondary stator
6799633	Fixture, machining, primary stator

a. Repair compressor rear bearing labyrinth seal. Refer to Disposition column, tables 1 and 2.

b. Replace compressor rear bearing labyrinth seal not within serviceable limits after repair.

6. COMPRESSOR REAR BEARING LABYRINTH SEAL − CHROME PLATING.

NOTE

Plating shall be accomplished per QQ−C−320, C12 (AMS 2406). Refer to WP 018 00.

a. The following requirements must be adhered to:

(1) Shot peening, prior to plating is not required.

(2) Heat treatment after plating is not required on any part.

WARNING

Heated parts will cause skin damage (burns). Use clean insulated gloves to handle parts.

(3) Parts with a Rockwell C40 hardness, or above, shall be heat treated at 750°F (399°C) for three hours after preparation grinding and prior to plating.

(4) Parts with carburized or hardened surfaces shall be heat treated after preparation grinding and prior to plating at 300−325°F (149−163°C) for five hours.

Table 1. Compressor Rear Bearing Rotating Seals− Inspection and Repair

Condition	Serviceable Limits	Repairable Limits	Disposition
Primary rotating seal lip wear. Use the detail −201,−202, −205, and −207 sub−assemblies of 6799629 checking fixture to inspect the seal diameters (figure 2).	Max of 0.0005 in. less than dimensions marked on master of the detail −205 subassembly.	Not repairable.	Condemn part exceeding serviceable limits.
Secondary rotating seal lip wear. Use the detail −201,−202, −206, and −207 sub−assemblies of 6799629 checking fixture to inspect the seal diameters.	Max of 0.0005 in. less than dimensions marked on master of the detail −206 subassembly.	Not repairable.	Condemn part exceeding serviceable limits.
Nicks, dents or scratches on seal diameters.	Max depth of 0.010 in. Total circumferential length of damage must not exceed 0.025 in. per seal diameter or 1.00 in. total per seal.	Sharp edges and metal buildup.	Remove sharp edges and metal buildup by blending.
Corrosion resistance plating protection on primary and secondary seals.	Plating must be firmly and continuously bonded on all seal surfaces.	Any seal that has less than 100 percent plating protection.	Surfaces can be tested for nicad plating per WP 018 00. Clean corroded seals by vapor blast. Nicad plate seals all over per WP 018 00.
Inside diameter:			
Primary seal.	2.363−2.3645 in.	2.370 in.	Repair ID with electroless nickel plate per AMS 2404. Finish ID to dimensions in figure 1 or 3. Max plating thickness shall be 0.003 in. after finishing.
Secondary seal.	2.363−2.365 in.	2.370 in.	
Seal flange.	2.364−2.368 in.	2.372 in.	
Width:			
Primary seal:			
Part No. 6793048	0.218−0.222 in.	0.214 in.	Repair surfaces with electroless nickel plate per AMS 2404. Finish part to dimensions in figure 1 or 3. Max plating thickness shall be 0.003 in. after finishing.
Part No. 6794722	0.243−0.247 in.	0.239 in.	
Secondary seal.	0.653−0.657 in.	0.649 in.	
Seal flange.	0.143−0.147 in.	0.139 in.	
	Min total width of three parts must not be less than 1.020 in. with part No. 6793048 or 1.045 in. with part No. 6794722.		

Table 2. Compressor Rear Bearing Stator Seals− Inspection and Repair

Condition	Serviceable Limits	Repairable Limits	Disposition
Primary stator seal surface wear. Use detail −201,−202, and −204 sub−assemblies of 6799629 checking fixture to inspect seal diameters. (figure 2)	Max of 0.0005 in. greater than dimensions marked on master of detail−204 subassembly.	Exceeds serviceable limits.	Clean up worn areas and silver plate seal surfaces per AMS 2410. Max plating thickness of 0.005 in. after finishing. Position seal assembly in 6799633 machining fixture and machine to limits in figure 4. Check seal step dimensions with 6799631 depth gage set (figure 7).
Secondary stator seal surface wear. Use detail −201,−202, and −203 subassemblies of 6799629 checking fixture to inspect seal diameters.	Max of 0.0005 in. greater than dimensions marked on master of detail −203 subassembly.	Exceeds serviceable limits.	Clean up worn areas and silver plate seal surfaces per AMS 2410. Max plating thickness of 0.005 in. after finishing. Position seal assembly in 6799632 machining fixture (figure 6) and machine to limits in figure 5. Check seal step dimensions with 6799631 depth gage set (figure 7).
Groove on seal steps.	Max depth of 0.0005 in.	Exceeds serviceable limits.	Clean up worn areas and silver plate seal surfaces per AMS 2410. Max plating thickness of 0.005 in. after finishing per figure 4 or 5. Check seal step dimensions with 6799631 depth gage set (figure 7).
Fretting on Surface E of secondary stator seal (figure 8).	65% of Surface E not damaged. Polish to remove buildup and roughness.	Exceeds serviceable limits.	Machine Surface E to remove fretting. Chrome plate the surface per paragraph 6, this WP. Plating thickness must not exceed 0.010 in. after finishing per figure 8. After plating, it is permissible for plating to be flaked off small lands between drainage slots.

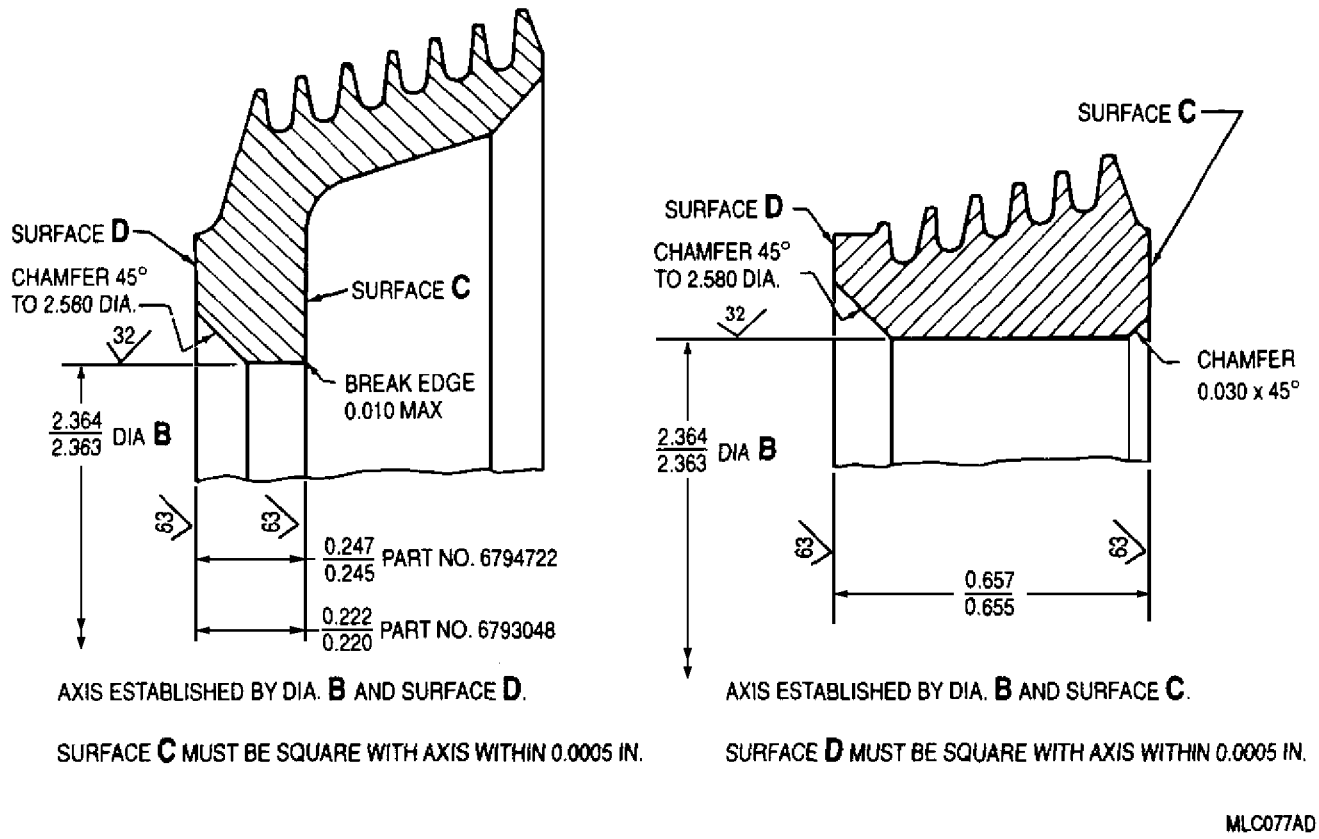

Figure 1. Compressor Rear Bearing Rotating Labyrinth Seal Repair

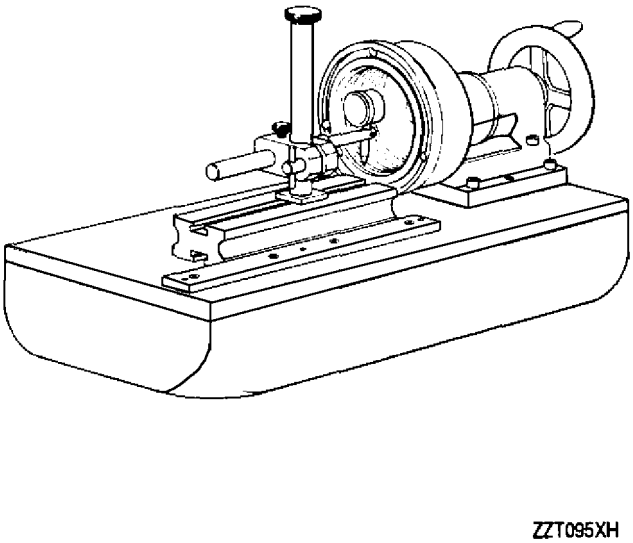

Figure 2. No. 6799629 Compressor Rear Bearing Labyrinth Seal Checking Fixture

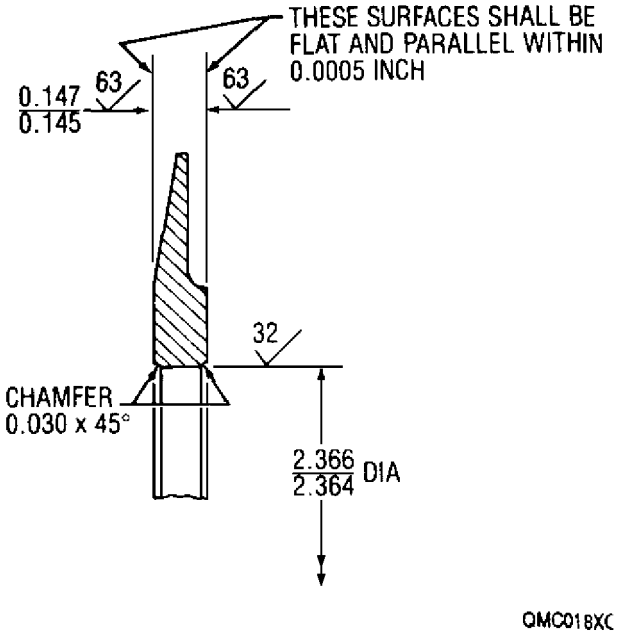

Figure 3. Compressor Rear Bearing Rotating Flange Repair

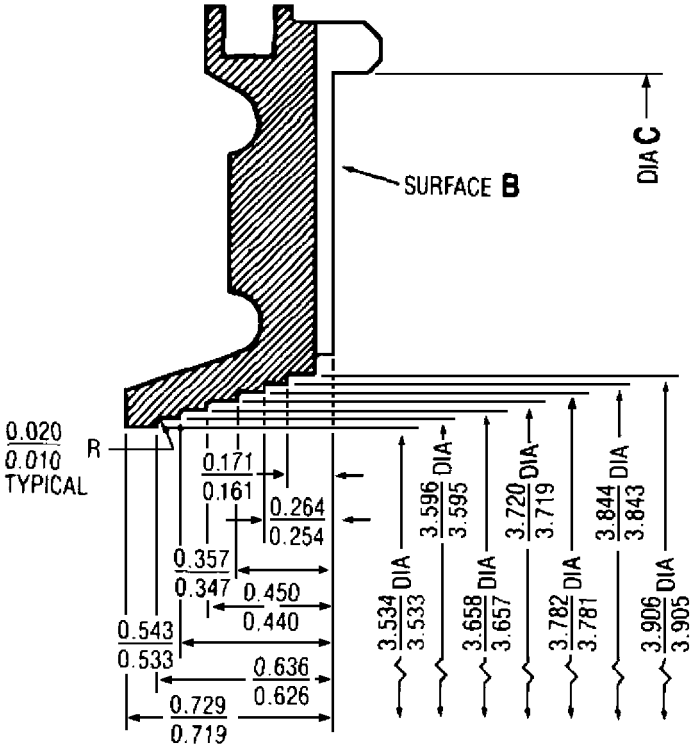

AXIS IS ESTABLISHED BY DIAMETER **C** AND SURFACE **B.**

SEAL DIAMETERS MUST BE CONCENTRIC WITH AXIS WITHIN 0.001 IN.

SURFACE FINSIH OF SEAL DIAMETERS SHALL BE 32 RMS

MLC106XF

Figure 4. Compressor Rear Bearing Primary Stator Labyrinth Seal Repair

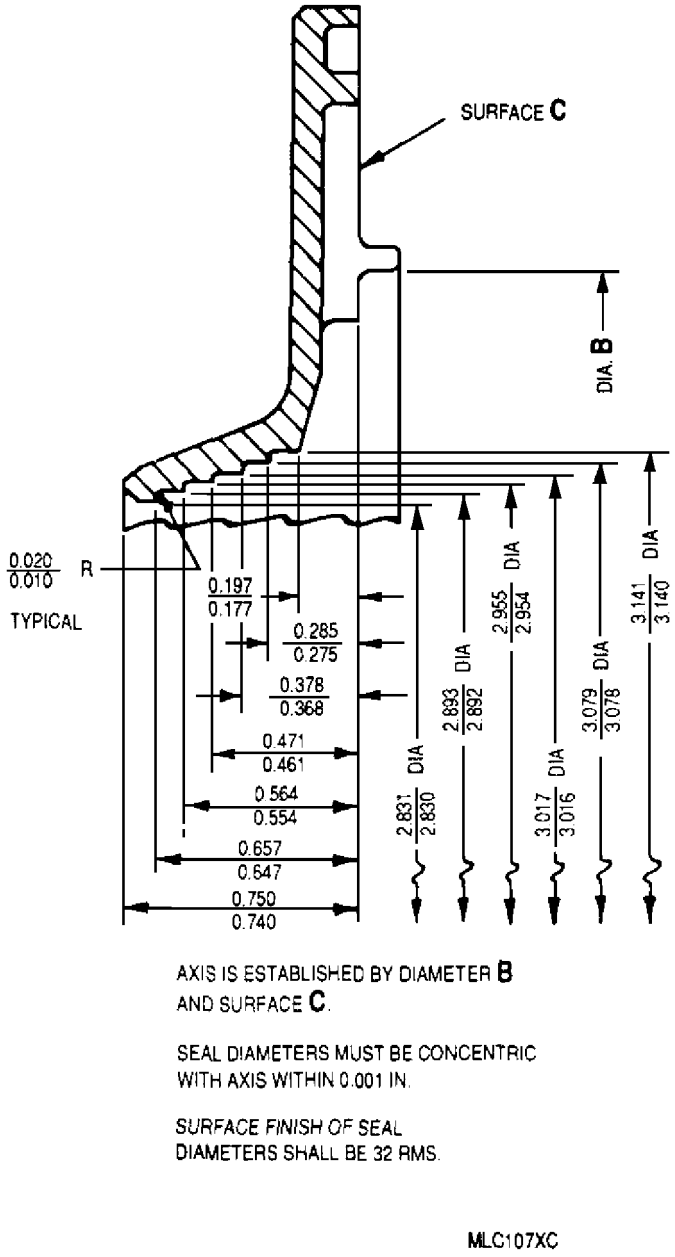

Figure 5. Compressor Rear Bearing Secondary Stator Labyrinth Seal Repair

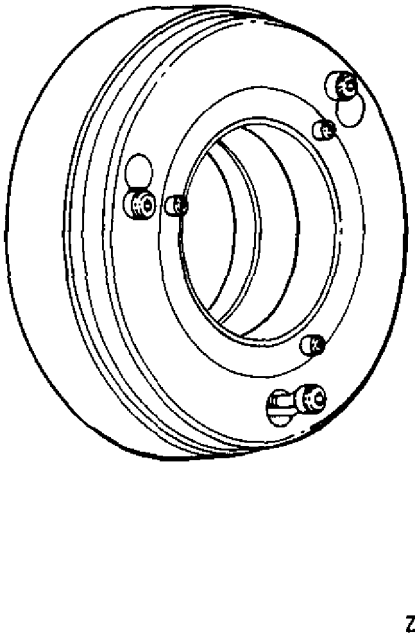

Figure 6. No. 6799632 Compressor Rear Bearing Labyrinth Seal Secondary Machining Fixture

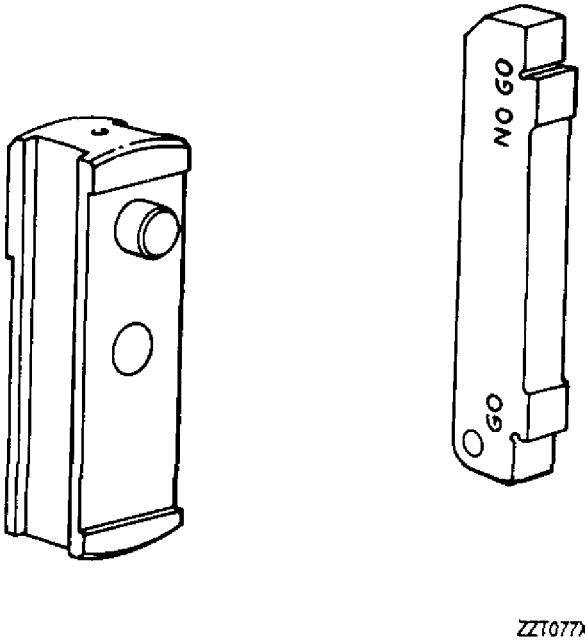

Figure 7. No. 6799631 Compressor Rear Bearing Labyrinth Seal Stator Step Depth Gage Set

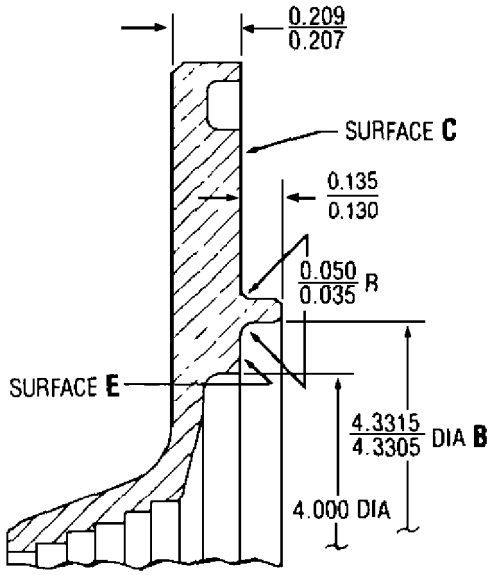

AXIS IS ESTABLISHED BY DIAMETER **B** AND SURFACE **C.**

SURFACE **E** MUST BE SQUARE WITH AXIS WITHIN 0.0005 IN.

FINISH OF SURFACE **E** MUST BE 20 RMS.

MLC100XG

Figure 8. Compressor Rear Bearing Secondary Stator Labyrinth Seal Fretting Repair

DEPOT MAINTENANCE

INSPECTION AND REPAIR

COMPRESSOR REAR BEARING OIL JET, COMPRESSOR FRONT BEARING OIL JET, AND TORQUEMETER BEARING OIL NOZZLE

Reference Material

Magnetic Particle and Fluorescent Penetrant Inspection − Procedures . . . . . WP 017 00

Alphabetical Index

Subject **Page No.**

Compressor Front Bearing Oil Jet 3
Inspection 3
Repair 3
Compressor Rear Bearing Oil Jet 2
Diameter B Repair 2
Inspection 2
Repair 2
Introduction 2
Torquemeter Bearing Oil Nozzle 4
Inspection 4
Repair 4

Record of Applicable Technical Directives

None

1. **INTRODUCTION.**

2. This work package provides the instructions for inspection and repair of the compressor rear bearing oil jet, compressor front bearing oil jet, and the torquemeter bearing oil nozzle used in the T56−A−427 turboprop engine.

3. **COMPRESSOR REAR BEARING OIL JET.**

4. COMPRESSOR REAR BEARING OIL JET − INSPECTION.

Materials Required

Specification No./Part No.	Nomenclature
MIL−PRF−23699	Oil, lubricating

a. Inspect compressor rear bearing oil jet. Refer to table 1.

b. Refer to WP 017 00 for fluorescent penetrant inspection (FPI) procedures.

5. COMPRESSOR REAR BEARING OIL JET − REPAIR.

Support Equipment Required

Part No./Type Designation	Nomenclature
No. 47	Drill

a. Repair compressor rear bearing oil jet. Refer to Disposition column, table 1.

b. Replace compressor rear bearing oil jet not within serviceable limits after repair.

6. COMPRESSOR REAR BEARING OIL JET − DIAMETER B REPAIR. (figure 1)

Materials Required

Specification No./Part No.	Nomenclature
MIL−T−8606	Tubing, steel
QQ−S−763	Bar, steel

Table 1. Compressor Rear Bearing Oil Jet − Inspection and Repair

Condition	Serviceable Limits	Repairable Limits	Disposition
	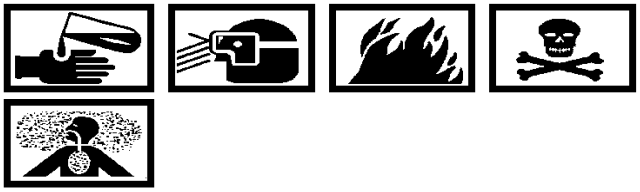 **Lubricating Oil, MIL−PRF−23699** **2**		
Oil jet flow check.	Min flow of 5.8 lb/min of MIL−PRF−23699 oil at 50 psi and 190−200°F (88−93°C).	Flow is less than serviceable limits.	Clean jet with a No. 47 size drill.
Wear and grooving: Diameter B (figures).	ID does not exceed 0.504 in.	ID exceeds 0.504 in.	Repair per paragraph 6, this WP.
Mounting surface.	Not serviceable.	Exceeds serviceable limits.	Rework by polishing smooth.

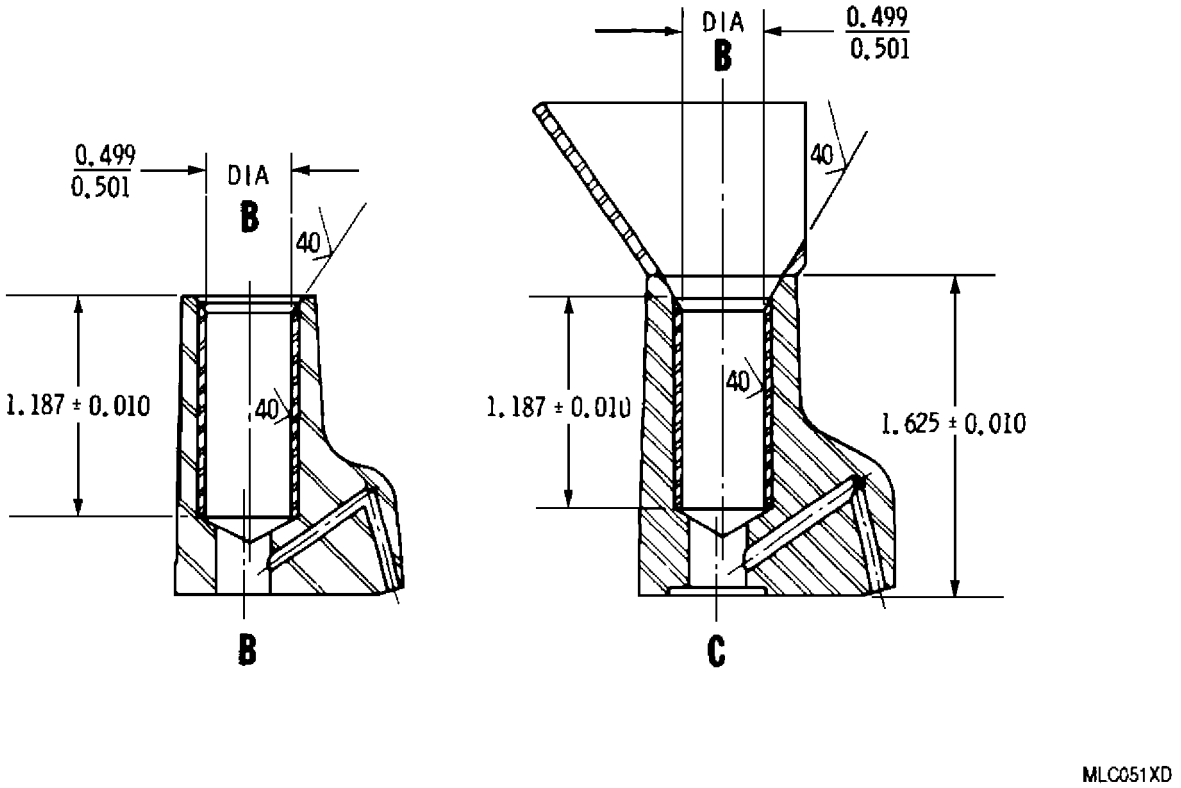

Figure 1. Compressor Rear Bearing Oil Jet Rework

a. Drill for reaming and ream 0.5625 in. diameter x 1.187 in. deep. Turn and install (QQ−S−763, Cl. 310, Cond. A) plug to obtain 0.0007−0.0012 in. shrink fit. Leave stock on end of plug for finishing. (MIL−T−8606, Type I, Comp. 321 tubing having a 0.5625 in. nominal OD may be substituted for plug.)

b. Round break bottom edge of plug or tubing. Seat at bottom of reamed hole.

c. Bore Diameter B to 0.499 − 0.501 in. and 1.187 in. deep. Countersink 60° to a 0.625 in. diameter. Finish as shown. Plug or tubing must be centrally located within 0.003 in. of finished Diameter B.

7. **COMPRESSOR FRONT BEARING OIL JET**.

8. COMPRESSOR FRONT BEARING OIL JET − INSPECTION.

Materials Required

Specification No./Part No.	Nomenclature
MIL−PRF−23699	Oil, lubricating

a. Inspect compressor front bearing oil jet. Refer to table 2.

b. Refer to WP 017 00 for fluorescent penetrant inspection (FPI) procedures.

9. COMPRESSOR FRONT BEARING OIL JET − REPAIR.

Support Equipment Required

Part No./Type Designation	Nomenclature
No. 55	Drill

a. Repair compressor front bearing oil jet. Refer to Disposition column, table 2.

b. Replace compressor front bearing oil jet not within serviceable limits after repair.

Table 2. Compressor Front Bearing Oil Jet − Inspection and Repair

Condition	Serviceable Limits	Repairable Limits	Disposition
	Lubricating Oil, MIL−PRF−23699 **2**		
Oil jet flow check.	Min flow of 3.4 lb/min of MIL−PRF−23699 oil at 50 psi and 190−200°F (88−93°C).	Flow is less than serviceable limits.	Clean jet with a No. 55 size drill.

10. **<u>TORQUEMETER BEARING OIL NOZZLE.</u>**

11. TORQUEMETER BEARING OIL NOZZLE − INSPECTION.

Materials Required

Specification No./Part No.	Nomenclature
MIL−PRF−23699	Oil, lubricating

a. Inspect torquemeter bearing oil nozzle. Refer to table 3.

b. Refer to WP 017 00 for fluorescent penetrant inspection (FPI) procedures.

12. TORQUEMETER BEARING OIL NOZZLE − REPAIR.

Support Equipment Required

Part No./Type Designation	Nomenclature
No. 55	Drill
No. 62	Drill

a. Repair torquemeter bearing oil nozzle. Refer to Disposition column, table 3.

b. Replace torquemeter bearing oil nozzle not within serviceable limits after repair.

Table 3. Torquemeter Bearing Oil Nozzle − Inspection and Repair

Condition	Serviceable Limits	Repairable Limits	Disposition
	Lubricating Oil, MIL−PRF−23699 **2**		
Oil jet flow check. 0.053−0.055 in. dia jet.	Min flow of 3.2 lb/min of MIL−PRF−23699 oil at 50 psi and 190−200°F (88−93°C), when 0.037−0.039 in. diameter jet is blocked.	Flow is less than serviceable limits.	Clean jet with a No. 55 size drill.
0.037−0.039 in. dia jet.	Min flow of 1.4 lb/min of MIL−PRF−23699 oil at 50 psi and 190−200°F (88−93°C), when 0.053−0.055 in. diameter jet is blocked.	Flow is less than serviceable limits.	Clean jet with a No. 62 size drill.

DEPOT MAINTENANCE

INSPECTION AND REPAIR

SPRAY SHIELD BAFFLES AND BAFFLE RINGS

Reference Material

Magnetic Particle and Fluorescent Penetrant Inspection − Procedures . . . . . WP 017 00

Alphabetical Index

Subject **Page No.**

Introduction 2
Spray Shield Baffle and Baffle Ring 2
Inspection 2
Repair 2
Weld Repair 2

Record of Applicable Technical Directives

None

1. **INTRODUCTION.**

2. This work package (WP) provides the instructions for inspection and repair of the spray shield baffles and baffle ring used on the T56−A−427 turboprop engine.

3. **SPRAY SHIELD BAFFLE AND BAFFLE RING.**

4. SPRAY SHIELD BAFFLE AND BAFFLE RING − INSPECTION.

a. Inspect spray shield baffle and baffle ring. Refer to table 1.

b. Refer to WP 017 00 for fluorescent penetrant inspection (FPI) procedures.

5. SPRAY SHIELD BAFFLE AND BAFFLE RING − REPAIR.

a. Repair spray shield baffle and baffle ring. Refer to Disposition column, table 1.

6. SPRAY SHIELD BAFFLE AND BAFFLE RING − WELD REPAIR.

Materials Required

Specification No./Part No.	Nomenclature
180 grit or less	Wheel, grinding
AWS A5.9−77	Rod, welding
AWS A5.14−76	Rod, welding

a. Repair weld, using GTAW−MA method and AWS A5.9−77 or AWS A5.14−76 welding rod.

WARNING

Grinding operations create metal particles which may enter the eye. Wearing goggles/faceshield is required.

b. Grind worn areas with a coarse wheel or sleeve, 180 grit or less, to roughen and clean worn or weld repaired areas on doubler.

Table 1. Upper and Lower Spray Shield Baffle and Baffle Ring − Inspection and Repair

Condition	Serviceable Limits	Repairable Limits	Disposition
Cracks.	Not serviceable.	Any cracking.	Weld repair cracks in the single ply area per paragraph 6, this WP.
Worn areas.	Light normal wear which is not through one ply of the doubler.	Exceeds serviceable limits.	Repair worn areas per Paragraph 6, this WP.
Damaged or missing lug nuts.	Any damaged or missing lug nuts.	Exceeds serviceable limits.	Install replacement lug nuts.
Worn flange/web, or ring.	Exceeds 50% of original metal thickness.	Exceeds serviceable limits.	Repair worn areas per paragraph 6, this WP.
Fretting wear of baffle assembly in diffuser/ combustion outer case mating area.	Exceeds 50% of original metal thickness.	Exceeds serviceable limits.	Repair worn areas per paragraph 6, this WP.
Wear in diffuser/ combustion outer case mating area.	Exceeds max radius of 9.625 in.	Exceeds serviceable limits.	Repair worn area per paragraph 6, this WP. Reform weld bead to original shield contour.

DEPOT MAINTENANCE

INSPECTION AND REPAIR

ENGINE MOUNT BRACKETS

Reference Material

Magnetic Particle and Fluorescent Penetrant Inspection − Procedures . . . . . WP 017 00
Plating and Surface Treatment of Parts . . . . . WP 018 00
Plating, Cadmium . . . . . AMS 2400

Alphabetical Index

Subject **Page No.**

Engine Rear Mount Bracket 2
Inspection 2
Repair 2
Engine Side Mount Forward and Rear Bracket 2
Inspection 2
Repair 2
Introduction 2

Record of Applicable Technical Directives

None

1. **INTRODUCTION.**

2. This work package (WP) provides the instructions for inspection and repair of the engine rear mount, side mount forward, and side mount rear brackets used on the T56−A−427 turboprop engine.

3. **ENGINE REAR MOUNT BRACKET.**

4. ENGINE REAR MOUNT BRACKET − INSPECTION.

a. Inspect engine rear mount bracket. Refer to table 1.

b. Refer to WP 017 00 for fluorescent penetrant inspection (FPI) procedures.

5. ENGINE REAR MOUNT BRACKET − REPAIR.

a. Repair engine rear mount bracket. Refer to Disposition column, table 1.

6. **ENGINE SIDE MOUNT FORWARD AND REAR BRACKETS.**

7. ENGINE SIDE MOUNT FORWARD AND REAR BRACKETS − INSPECTION.

a. Inspect engine side mount forward and rear brackets. Refer to table 2.

b. Refer to WP 017 00 for fluorescent penetrant inspection (FPI) procedures.

8. ENGINE SIDE MOUNT FORWARD AND REAR BRACKETS − REPAIR.

a. Repair engine side mount forward and rear brackets. Refer to Disposition column, table 2.

Table 1. Engine Rear Mount Bracket − Inspection and Repair

Condition	Serviceable Limits	Repairable Limits	Disposition
Cracks.	Not serviceable.	Not repairable.	Condemn brackets exceeding serviceable limits.
Bushing ID wear.	0.625−0.627 in. max ID.	Not repairable.	Condemn bushing exceeding serviceable limits.
Plating damage.	Minor wear.	No flaking.	Cadmium plate all over, except ID of pilot diameters, per AMS 2400.
Corrosion.	Not serviceable.	Any damage.	Remove corrosion and touch up cadmium plating per WP 018 00.

Table 2. Engine Side Mount Forward and Rear Brackets − Inspection and Repair

Condition	Serviceable Limits	Repairable Limits	Disposition
Cracks.	Not serviceable.	Not repairable.	Condemn brackets exceeding serviceable limits.
Corrosion.	Not serviceable.	Any damage.	Remove corrosion.

DEPOT MAINTENANCE

INSPECTION, REPAIR, AND TESTING

TUBING ASSEMBLIES

Reference Material

Magnetic Particle and Fluorescent Penetrant Inspection − Procedures . . . . . WP 017 00

Alphabetical Index

Subject **Page No.**

Introduction 2
Tubing Assembles 2
Inspection 2
Repair 2
Testing 2

Record of Applicable Technical Directives

None

1. **INTRODUCTION.**

2. This work package (WP) provides the instructions for inspection, repair, and testing of the tubing assemblies used on the T56−A−427 turboprop engine.

3. **TUBING ASSEMBLIES.**

4. TUBING ASSEMBLIES − INSPECTION.

NOTE

Any visible penetration of tube wall surface by chafing, galling, or fretting is cause for correction of the conditions that originated the damage.

a. Inspect tubing assemblies. Refer to table 1.

b. Refer to WP 017 00 for fluorescent penetrant inspection (FPI) procedures.

5. TUBING ASSEMBLIES − REPAIR.

Materials Required

Specification No./Part No.	Nomenclature
AMS 5782	Wire, welding
AMS 5783	Rod, welding
AMS 5784	Wire, welding
AMS 5785	Rod, welding

a. Repair tubing assemblies. Refer to Disposition column, table 1.

b. Replace tubing assemblies not within serviceable limits after repair.

6. TUBING ASSEMBLIES − TESTING.

Materials Required

Specification No./Part No.	Nomenclature
MIL−PRF−680, Type II	Solvent, dry cleaning

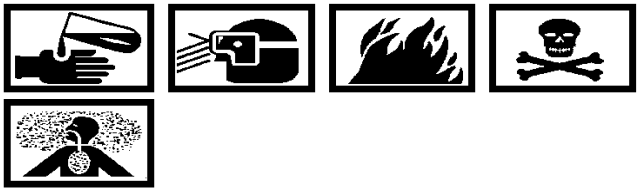

Dry Cleaning Solvent
MIL−PRF−680, Type II **3**

a. Check oil tubes at 100 psi, fuel tubes at 1000 psi, and air tubes at 250 psi as follows:

(1) Thoroughly clean internal surfaces of the tube or line using MIL−PRF−680, type II dry cleaning solvent and air dry.

NOTE

If flanges are used for fastening on a blanking plate, support the flanges to prevent deformation during test.

(2) Accomplish testing with plugs and blanking plates tightened and fastened using necessary bolts or clamps.

(3) Fasten tube or line in a fixture in such a manner that stresses and strains are not placed on the tube or connections.

(4) Use an approved gasket material between blanking plates and finished surface of tube or line.

(5) Place tube or line in a test fixture and file with the appropriate test medium (oil, fuel or air). Apply specified pressure and hold for a sufficient time to check for leaks. No leakage is allowed.

(6) Clean test medium from the tube or line after test and install protective caps in the tube or line ends.

Table 1. Tubing Assemblies − Inspection and Repair

Condition	Serviceable Limits	Repairable Limits	Disposition
Dents:			
On tube.	Must not restrict tube opening more than 20 percent of its diameter.	Not repairable.	Condemn tube exceeding serviceable limits. Pressure test per paragraph 6, this WP.
In flange.	Not serviceable.	Not repairable.	Condemn tube exceeding serviceable limits.
Nicks, scoring or chafing on tube.	Depth of damage must not exceed 15 percent of wall thickness.	No breakthrough of tube wall.	Weld repair damaged area with AMS 5782 or AMS 5784 welding wire or AMS 5783 or AMS 5785 welding rod. Pressure test per paragraph 6, this WP.
Tube expansion loop overlap clearance.	0.050 in. minimum clearance.	Exceeds serviceable limits.	Reform and pressure test per paragraph 6, this WP.
Cracks in any portion of tube.	Not serviceable.	Not repairable.	Condemn tube exceeding serviceable limits.
Cracks and pin holes in flange weld.	Not serviceable.	An crack or pin hole.	Blend cracks or pin holes and weld repair with AMS 5782 or AMS 5784 welding wire, or AMS 5783 or AMS 5785 welding rod. Pressure test per paragraph 6, this WP.

DEPOT MAINTENANCE

INSPECTION AND REPAIR

COMBUSTION CHAMBER OUTER CASING

Reference Material

Magnetic Particle and Fluorescent Penetrant Inspection − Procedures . . . . . WP 017 00
Helicoil Repair Procedure . . . . . NAVAIR 02−1−19

Alphabetical Index

Subject **Page No.**

Combustion Chamber Outer Casing 2
Crack Repair 4
Inspection 2
Repair 2
Tapped Hole Repair 4
Weld Repair (Titanium) 4
Introduction 2

Record of Applicable Technical Directives

None

1. **INTRODUCTION.**

2. This work package (WP) provides the instructions for inspection and repair of the combustion chamber outer casing used on the T56−A−427 turboprop engine.

3. **COMBUSTION CHAMBER OUTER CASING.**

4. COMBUSTION CHAMBER OUTER CASING − INSPECTION.

a. Inspect combustion chamber outer casing. Refer to table 1.

b. Refer to WP 017 00 for Fluorescent Penetrant Inspection (FPI) procedures.

5. COMBUSTION CHAMBER OUTER CASING − REPAIR.

Materials Required

Specification No./Part No.	Nomenclature
MS124695	Helicoil insert
AMS 4928	Bars, Forgings, and Rings
AMS 5645	Bars, Forgings, Tubing, and Rings
AMS 5651	Bars, Forgings, Tubing, and Rings
AMS 4951	Wire, welding
AMS 4954	Wire, welding
MIL−R−5031 Class 6	Rod, welding
ASTM D740−84	Methyl Ethyl Ketone

a. Repair combustion chamber outer casing. Refer to Disposition column, table 1.

b. Replace combustion chamber outer casing not within serviceable limits after repair.

Table 1. Combustion Chamber Outer Casing − Inspection and Repair

Condition	Serviceable Limits	Repairable Limits	Disposition
NOTE In areas where plating has been applied, or plating ends adjacent to welded area, indications are sometimes in the plating only. Carefully blend away a minimum amount of plating and repeat the inspection for proper evaluation.			
FPI indications.	Indications which do not extend into the parent metal. Porosity, laps or globular voids in welds are acceptable when positively identified as such.	Not repairable.	Condemn part exceeding serviceable limits.
Corrosion.	No corrosion acceptable.	Pitting penetrating into base metal.	After normal cleaning of the part, remove corrosion and rust by any standard procedure.
Damaged boss threads.	No damage acceptable.	Any damaged area.	Repair per figure 1 or 2. (Refer to NAVAIR 02−1−19 for Helicoil repair procedure.)

Table 1. Combustion Chamber Outer Casing − Inspection and Repair (contd)

Condition	Serviceable Limits	Repairable Limits	Disposition
Cracks in parent material.	No cracks acceptable.	Any cracks.	Weld repair per paragraph 7, this WP.
Wear or fretting. Front and rear flanges.	Maximum of 0.030 in.	Any amount of damage.	Weld repair per paragraph 8, this WP.
Damage to holes. (0.3720−0.3730 in. dia holes at 6 and 12 o'clock positions on either end and 1/4−28 tapped holes in aft end).	Not serviceable.	Any amount of damage.	Repair per figures 2 and 3 or paragraph 6, this WP.
Front and rear bolt holes circles out−of−round.	Maximum of 0.010 in. Average of 4 locations, measured on the inner pilot diameter.	Exceeds serviceable limits.	Case may be made serviceable by cold straightening. Inspect casing for cracks and out−of−round condition.

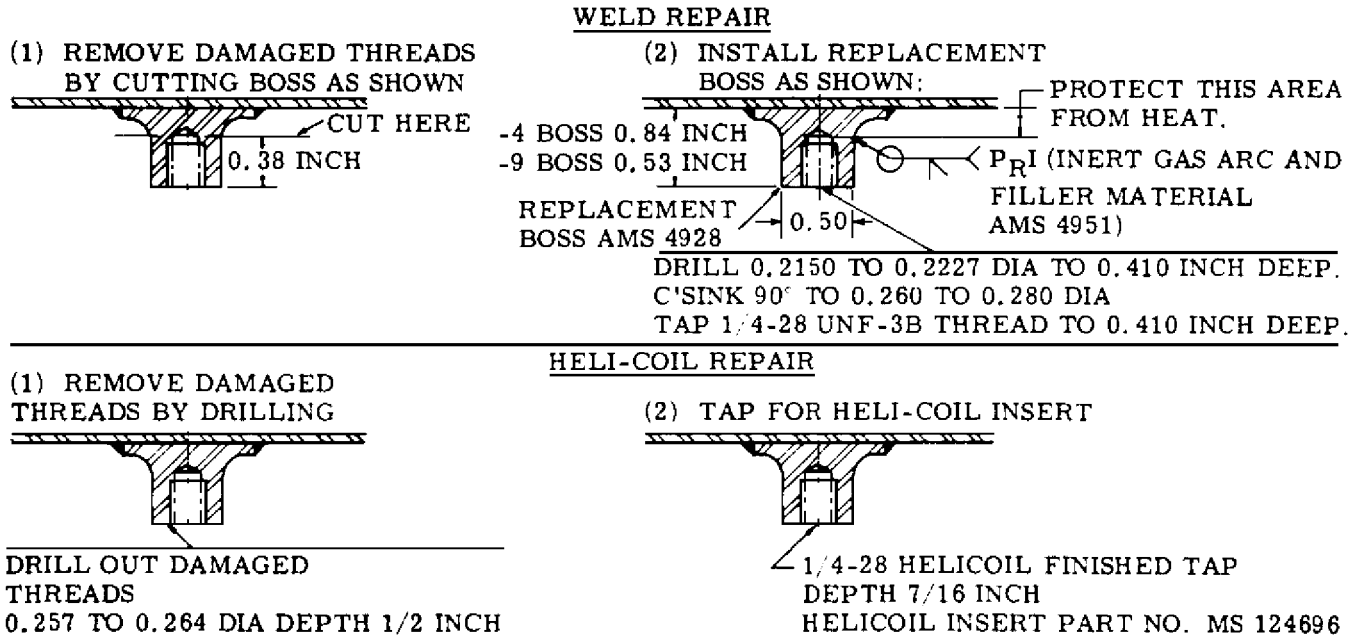

Figure 1. Combustion Chamber Outer Casing Boss Repair

6. COMBUSTION CHAMBER OUTER CASING − TAPPED HOLE REPAIR. (figure 2)

Materials Required

Specification No./Part No.	Nomenclature
AMS 4928	Stock, bar
AMS 5645	Stock, bar

a. Tap drill a 21/64 in. dia through hole. Counter drill 3/8 in. diameter x 1/32 in. deep. Tap through to 3/8−24 UNF−3B thread, leaving at least 0.100 in. or more stock outside of tapped hole.

b. Install a 3/8−24 UNF−3 threaded plug, AMS 4928 for titanium casing or AMS 5645 for stainless steel casing. Bottom at counter drill depth of tapped hole. PD fit to be 0.0005 − 0.003 in. tight. Peen top edge of plug lightly. Top of plug must be flush with finished surfaces.

c. Drill 0.2150 − 0.2227 in. diameter through hole. Countersink 90° to 0.260 − 0.280 in. diameter. Tap 1/4−28 UNF−3B thread through.

7. COMBUSTION CHAMBER OUTER CASING − CRACK REPAIR.

Materials Required

Specification No./Part No.	Nomenclature
AMS 4951	Wire, welding
ASTM D740−84	Methyl Ethyl Ketone

a. Cut a V−groove the full length of crack.

WARNING

Be sure Methyl Ethyl Ketone (MEK) is dry before welding.

b. Thoroughly clean metal 0.500 in. on both sides of crack with ASTM D740−84 MEK.

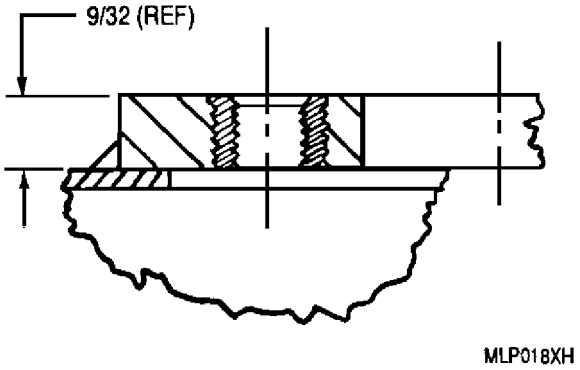

Figure 2. Repair of 1/4−28 Tapped Holes in Combustion Chamber Outer Casing

c. Clean filler rod with MEK prior to use.

d. Weld crack using AMS 4951 weld rod in an argon atmosphere.

e. Clean entire case with a light vapor blast. Thoroughly dry and wipe all over with MEK or equivalent prior to stress relief.

f. Stress relieve at 975−1025°F (524−552°C) for four hours in an argon atmosphere furnace and leave in furnace to cool in same atmosphere.

g. After stress relief, grit blast weld area.

h. Fluorescent penetrant inspect weld repair.

8. COMBUSTION CHAMBER OUTER CASING − WELD REPAIR. (TITANIUM)

Materials Required

Specification No./Part No.	Nomenclature
AMS 4951	Wire, welding
AMS 4954	Wire, welding
ASTM D740−84	Methyl Ethyl Ketone
MIL−A−21380 Type I	Aluminum Oxide 220 or 240 mesh
MIL−A−21380 Type III	Silicon Carbide 220 or 240 mesh
MIL−G−9954	Glass beads

a. To repair cracks, cut a V−groove the full length of crack. A groove is not necessary for repair of worn or fretted areas.

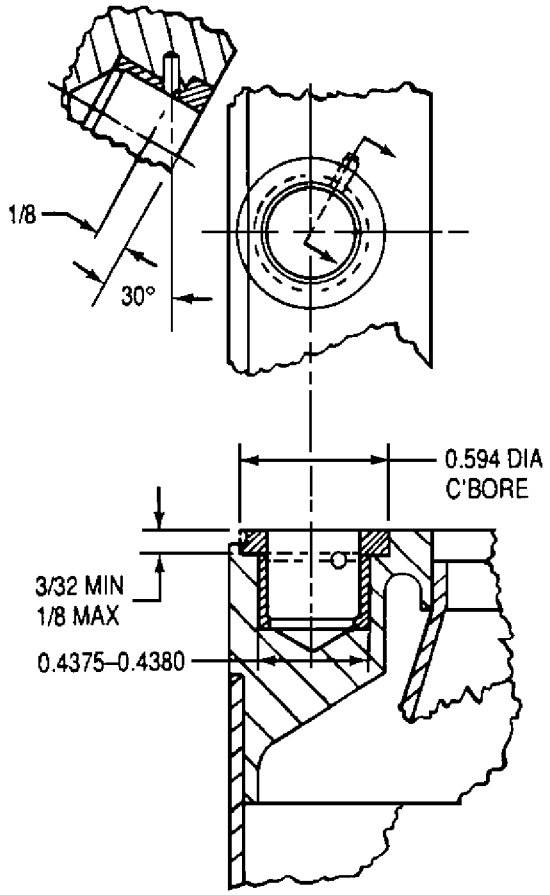

A. Bore and ream the 0.4375 in. dia hole. Break sharp edges.

B. Fabricate an AMS 5651F stainless steel insert to obtain 0.000−0.001 in. press fit when assembled. Allow stock on face for finishing when in place. Chamfer end 0.025−0.035 in. x 45°. Install insert.

C. Drill a 0.058−0.060 in. dia x 5/32 in. deep hole at the location which produces the most stock outside the pin hole. Select a CRES steel pin for a drive fit and peen flush.

D. Drill for ream 0.359−0.391 in. deep; ream to 0.372−0.373 in. diameter, 0.328−0.360 in. deep.

MLP019XD

Figure 3. Repair of 0.3720 − 0.3730 in. Dia Holes (12 and 6 o'clock) In the Combustion Outer Case

b. Grind repair area as necessary with rotary stones etc. to avoid welding over excessively thinned areas or crevices.

c. The area of repair must be cleaned thoroughly of all oxidized or discolored metal and surface contamination for 1.00 in. on both sides of the weld zone. This may be accomplished by glass bead blasting (vapor blast) with clean, unused glass beads followed by cleaning with MEK.

d. Use filler rod AMS 4951 or AMS 4954 that has been cleaned with MEK and fill the groove or wear area by welding in an argon atmosphere.

e. Use random sequence to reduce temperature build−up and to distribute thermal stresses.

f. Clean entire case by light vapor blast. Thoroughly dry and clean all over with MEK prior to stress relief.

g. Stress relieve at 975−1025°F (524−552°C) for four hours in a high purity argon atmosphere at 100 micron pressure. Evacuate furnace to below one micron pressure level prior to back filling with high purity argon. Establish a ten micron pressure level before initiating heating cycle. Evaluate heating cycle by inserting thermocouples in heating medium to determine if temperature uniformity conforms with the 975−1025°F (524−552°C) requirement. After stress relieving, leave case in furnace to cool in same atmosphere.

h. After stress relief procedure, grit blast weld area.

i. Fluorescent penetrant inspect weld repair.

DEPOT MAINTENANCE

INSPECTION AND REPAIR

COMBUSTION LINER ASSEMBLIES

Reference Material

Magnetic Particle and Fluorescent Penetrant Inspection − Procedures . . . . . WP 017 00
Identification Marking Methods . . . . . AS 478

Alphabetical Index

Subject **Page No.**

Combustion Liner Assemblies 2
Fuel Nozzle Ferrule Replacement 9
Igniter Ferrule Mount Assembly Replacement 9
Inspection 2
Repair 2
Weld Repair 6
Introduction 2

Record of Applicable Technical Directives

None

1. **INTRODUCTION.**

2. This work package (WP) provides the instructions for inspection and repair of the combustion liner assemblies used in the T56−A−427 turboprop engine.

3. **COMBUSTION LINER ASSEMBLIES.**

4. COMBUSTION LINER ASSEMBLIES − INSPECTION.

Support Equipment Required

Part No./Type Designation	Nomenclature
6796659 or 6799724	Template, transition exit

a. Inspect combustion liner assemblies. Refer to table 1 and figure 1.

b. Refer to WP 017 00 for fluorescent penetrant inspection (FPI) procedures.

5. COMBUSTION LINER ASSEMBLIES − REPAIR.

a. Repair combustion liner assemblies. Refer to Disposition column, table 1.

b. Replace combustion liner assemblies not within serviceable limits after repair.

Table 1. Combustion Liner Assemblies − Inspection and Repair

Condition	Serviceable Limits	Repairable Limits	Disposition
Cracks:			
1. Crossover tube ferrule attaching weld.	Not serviceable.	Any crack.	Weld repair per paragraph 6, this WP.
2. Adjacent to crossover tube ferrule.	Not serviceable.	Any crack.	Weld repair per paragraph 6, this WP.
3. Spark igniter ferrule attaching weld.	Not serviceable.	Any crack.	Weld repair per paragraph 6, this WP.
4. Adjacent to spark igniter ferrule.	Not serviceable.	Any crack.	Weld repair per paragraph 6, this WP.
5. Fuel nozzle ferrule attaching weld.	Not serviceable.	Any crack.	Weld repair per paragraph 6, this WP.
6. Dome area.	Not serviceable.	Any crack.	Weld repair per paragraph 6, this WP.
7. Transition section doubler.	Crack up to 5/8 in. No two cracks closer than 1/2 in.	Exceeds serviceable limits.	FPI to determine end of crack. Stop drill with a No. 40 drill. Polish to remove metal build−up sharp edges. Cracks in excess of 5/8 in. long shall be weld repaired per paragraph 6, this WP.
8. Swirl vane outer tack weld.	Any number of cracks, provided spotwelds are intact and swirl vane is not distorted or burned more than 3/8 in. on corners.	Exceeds serviceable limits.	Weld repair per paragraph 6, this WP.

Table 1. Combustion Liner Assemblies − Inspection and Repair (contd)

Condition	Serviceable Limits	Repairable Limits	Disposition
Cracks: (contd)			
9. Transition liner assembly section inside or outside.	Not serviceable.	Any crack.	Weld repair per paragraph 6, this WP. If repair cannot be accomplished within these requirements, replace transition liner assembly section per paragraph 15, this WP.
10. Tab ends inside of liner section.	3/8 in. max length or no more than two per tab or six per liner. Cracks shall not converge.	Exceeds serviceable limits.	Replace combustion liner assembly.
11. Transition liner assembly section exit.	Less than 1/2 in.	Exceeds serviceable limits.	Replace combustion liner assembly.
12. Liner support bracket.	Not serviceable.	Any cracked or loose.	Repair on three sides per paragraph 6, this WP. Straighten bracket if bent. Bracket location and contour shall be checked per paragraph 21, this WP.
13. Corrugations.	Any crack.	No repair required.	Combustion liner assembly is serviceable.
Crack between a relief slot and a primary air hole.	Cracks are acceptable.	Any crack exceeding 1/2 in.	Repair per paragraph 6, this WP.
Wear or fretting:			
14. Igniter ferrule mount assembly.	Minimum wall thickness of 0.025 in. Max ID of 0.890 in.	Not repairable.	Replace mount assembly per paragraph 9, 10, or 11, this WP.
			Polish to remove fretting. Max depth in fretted area shall not exceed 0.010 in. Replace mount assembly exceeding fretting depth limit.
15. Fuel nozzle ferrule.	ID does not exceed 1.169 in.	Not repairable.	Replace mount assembly per paragraph 12 or 13, this WP.
			Polish to remove fretting. Max depth in fretted area shall not exceed 0.010 in. Replace mount assembly exceeding fretting depth limit.

Table 1. Combustion Liner Assemblies − Inspection and Repair (contd)

Condition	Serviceable Limits	Repairable Limits	Disposition
Wear or fretting: (contd)			
16. Crossover tube ferrule.	Minimum ID of 1.037 in. Maximum ID of 1.065 in. after blending of raised metal. Min. of 0.030 in. flange thickness.	Not repairable.	Replace combustion liner assembly.
17. Transition liner assembly section at exit.	Maximum wear of 1/2 of sheet metal thickness or 0.020 in.	Max wear of 3/4 of sheet metal thickness.	Replace combustion liner assembly.
18. Transition section thermocouple grommet.	Maximum ID of 0.440 in.	Not repairable.	Replace combustion liner assembly.
19. Damaged or missing thermocouple grommet tab.	Not serviceable.	Not repairable.	Replace combustion liner assembly.
20. Warped or distorted corrugations.	Air passages not obstructed.	Any obstruction of air passages.	Replace combustion liner assembly.
21. Warped or distorted transition liner assembly section.	Template shall be inserted 3/16 of an inch into the opening with a max of 0.020 inch clearance on any side of template.	Not repairable.	Replace combustion liner assembly.
22. Broken spotwelds.	No broken spotwelds.	Any broken spotweld.	Replace combustion liner assembly.
Burning and Erosion:			
23. Liner, any area.	Burning or erosion is acceptable providing bulging of liner surface does not exceed 1/16 in.	Damage extending axially over two or more liner sections or corrugations.	Replace combustion liner assembly.
24. Tab ends of liner section and corrugations. **NOTE** Corrugation strips are numbered, starting at liner dome.	No. 1, 2 and 3 corrugation lands may be burned up to trailing edge of the liner section tab, total width of the land. No. 4 and 5 corrugation lands may be burned up to 1/4 in. from the trailing edge of land, total width of the land. Tabs may be burned 1/2 in. on the corners and 1/8 in. between slots. Not more than four burned lands or tabs in any one section (figure 20).	Damage extending axially over two or more liner sections.	Replace combustion liner assembly.
25. Internal coating.	Coating chip 1/2 in. by 1/2 in. max in local areas. No erosion of base metal allowed.	Not repairable.	Replace combustion liner assembly if chipped area is larger than serviceable limit or base metal is eroded.

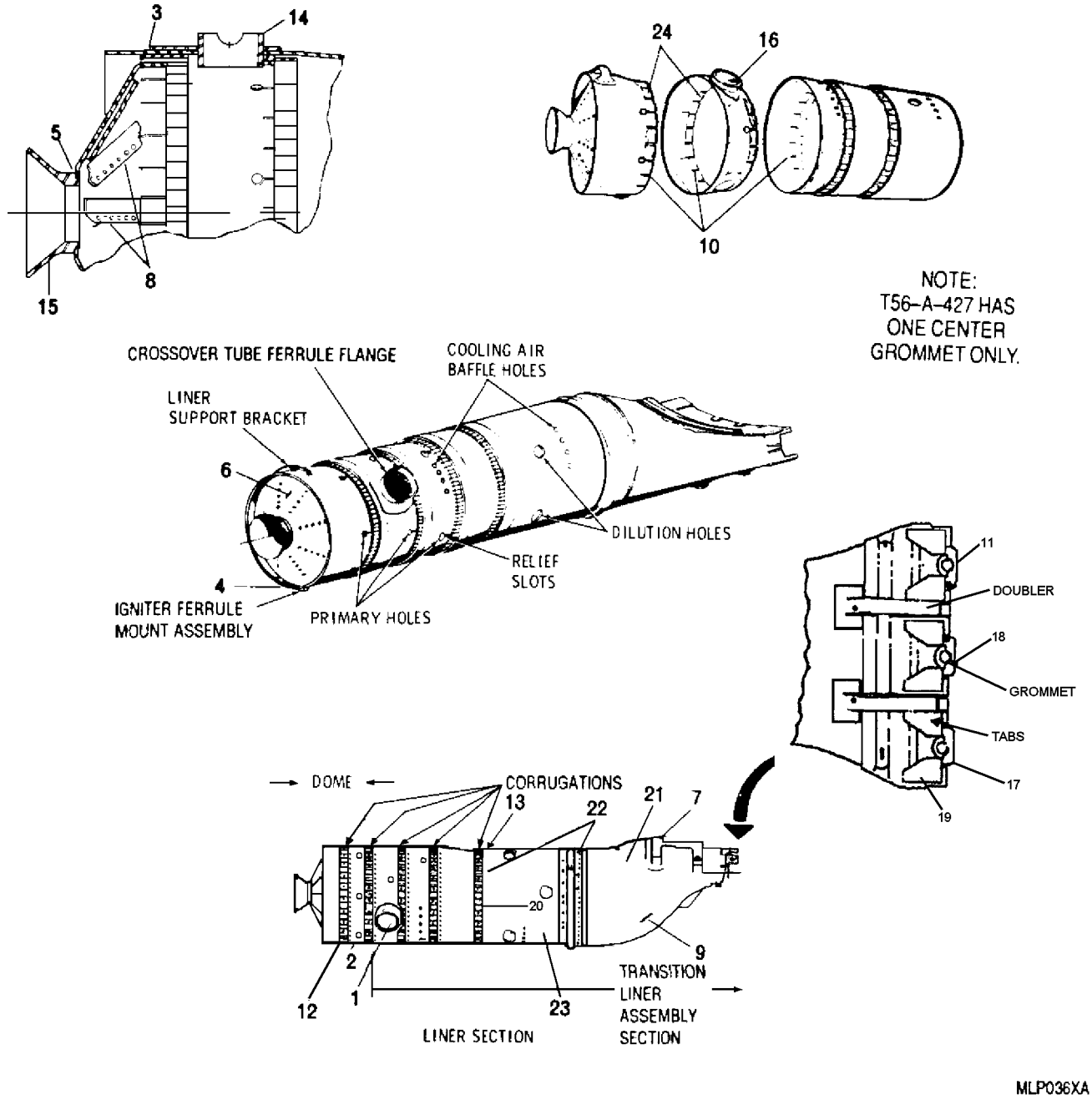

Figure 1. Combustion Liner Assembly Inspection Areas

6. COMBUSTION LINER ASSEMBLIES − WELD REPAIR.

Materials Required

Specification No./Part No.	Nomenclature
AMS 5786	Wire, welding

NOTE

Single cracks ending in a “Y” upstream are acceptable.

Single cracks running under adjoining liner sections which prevent a complete weld shall not be repaired. The liner is acceptable for use with this type of crack.

Weld repair any crack which can be completely repaired without obstructing or deflecting air flow.

a. Following conditions apply to crack weld repair.

(1) Use gas tungsten arc weld (GTAW−MA) method and AMS 5786 weld wire for crack repair.

(2) All outside welds within 1/2 in. of holes or corrugations shall be smooth and blended with parent metal to prevent air flow obstructions.

NOTE

Stress relieve combustion liner assemblies upon completion of welding.

(3) Stress relieve combustion liners prior to any processing except cleaning. Soak at 1825−1875°F (996−1024°C) for 30 minutes minimum in a neutral or slightly reduced atmosphere oven then air cool.

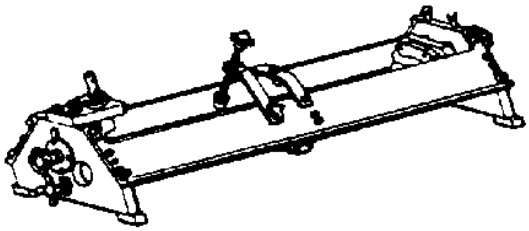

Figure 2. 6796795 Holding Fixture

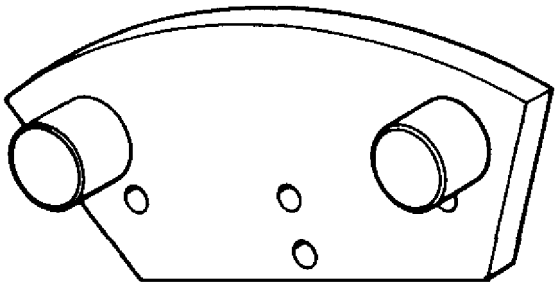

ZZT372XH

Figure 3. 6799723 Locating Adapter

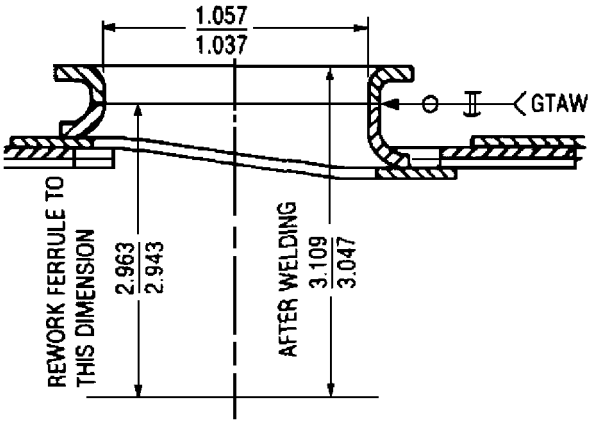

Figure 4. Crossover Tube Ferrule Replacement Dimensions

MLP037XH

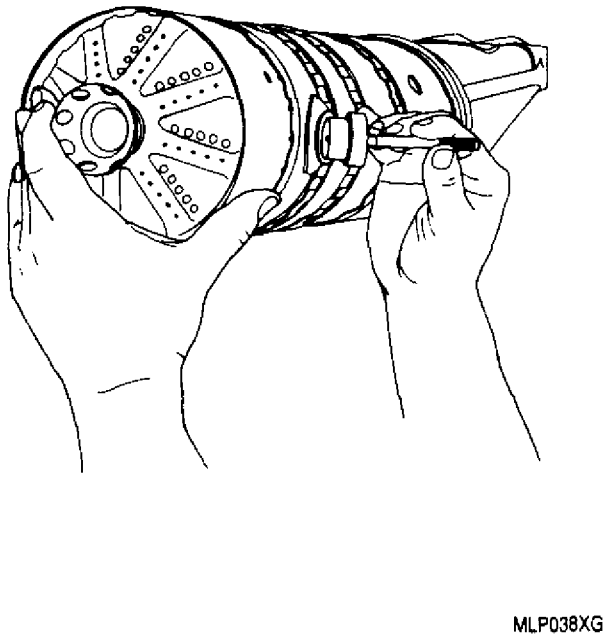

Figure 5. Positioning Crossover Tube Ferrule with 6796611 Aligning Bar

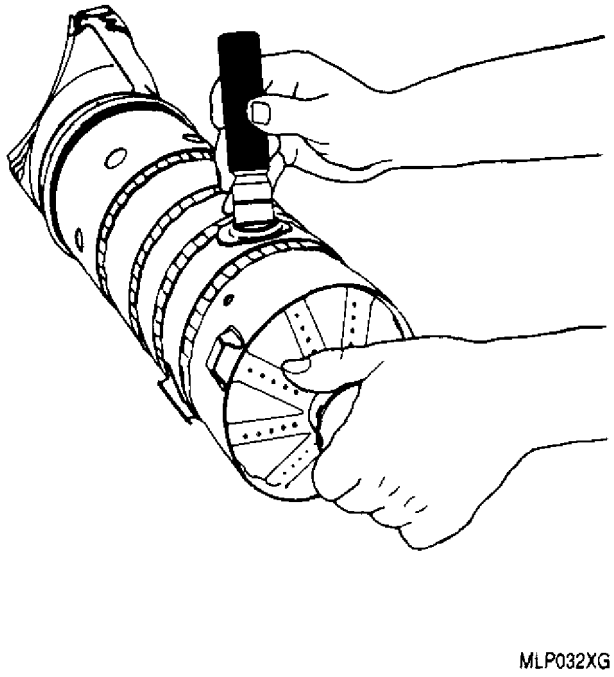

Figure 6. Checking Crossover Tube Ferrule ID with 6796641 Plug Gage

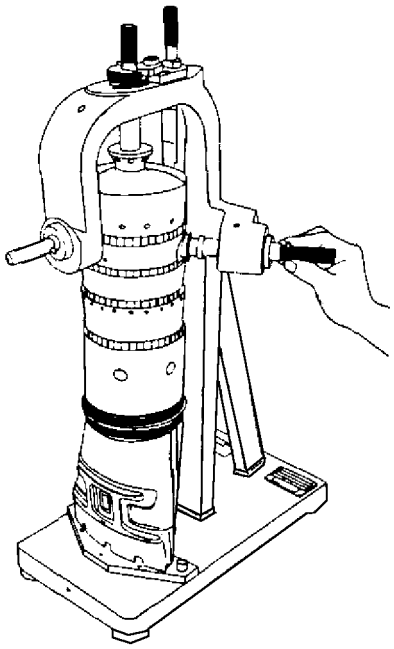

Figure 7. Checking Crossover Tube Ferrule Alignment with 6796793 Checking Fixture

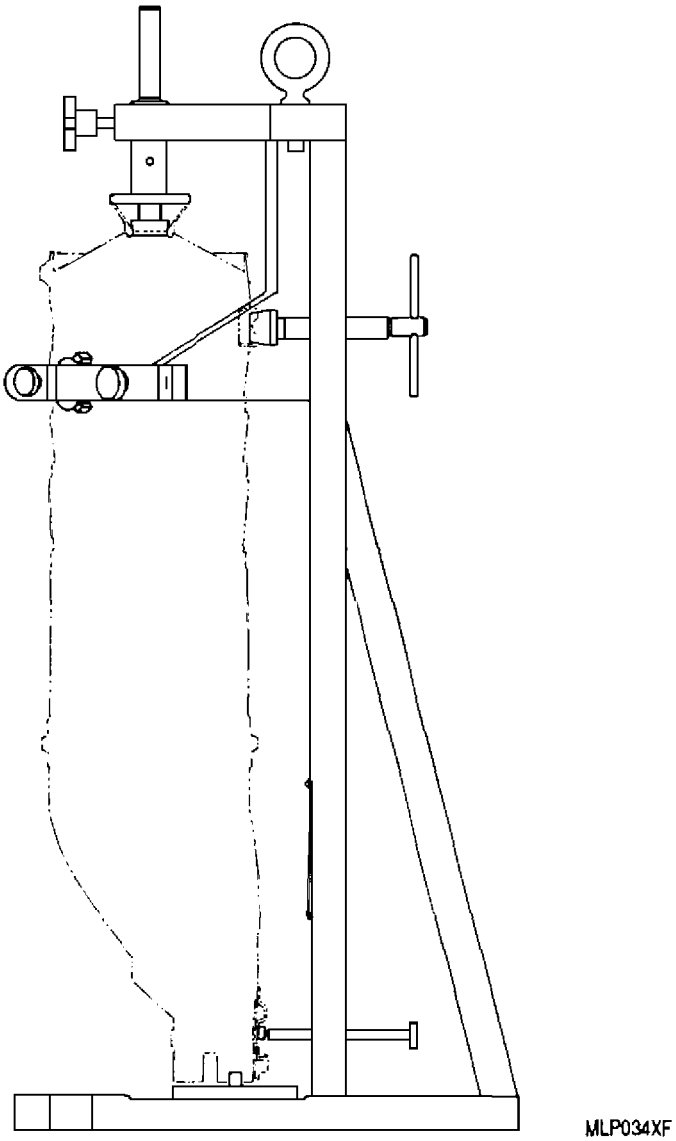

Figure 8. 23005031 Combustion Liner Crossover Tube Ferrule Welding Fixture

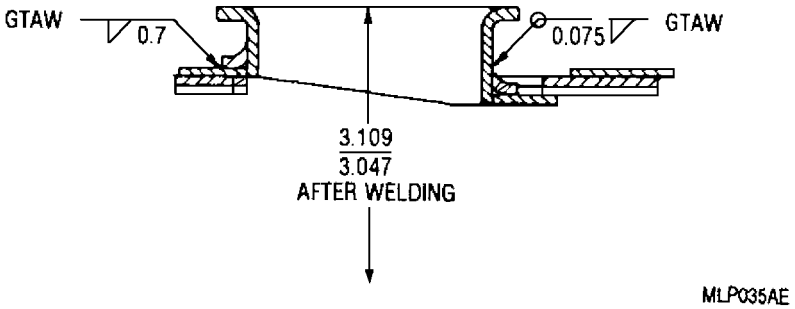

Figure 9. Crossover Tube Ferrule Replacement

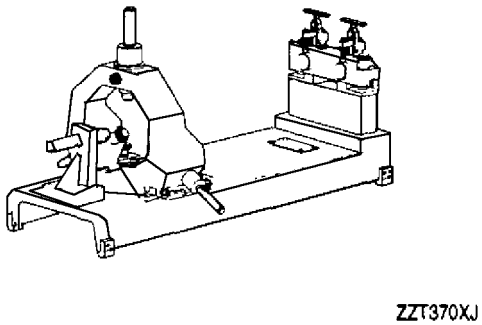

Figure 10. 6799780 Igniter Ferrule Weld Fixture

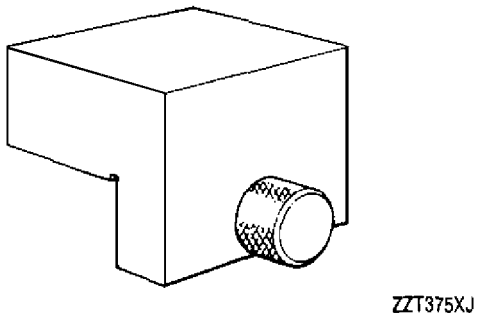

Figure 11. 6799727 Locating Adapter

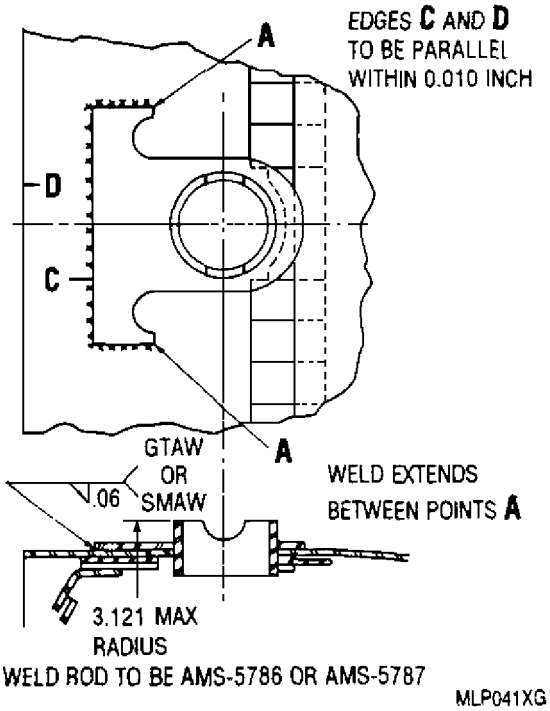

Figure 12. Igniter Ferrule Mount Replacement Details

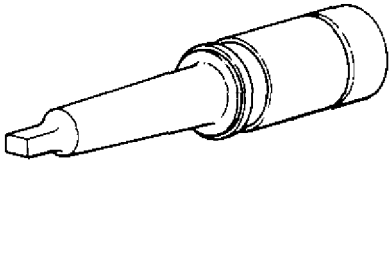

Figure 13. 6796620 Igniter Ferrule Plug Cutter Adapter

7. COMBUSTION LINER ASSEMBLIES − IGNITER FERRULE MOUNT ASSEMBLY REPLACEMENT.

a. Repair procedures to be determined.

8. COMBUSTION LINER ASSEMBLIES − FUEL NOZZLE FERRULE REPLACEMENT.

a. Repair procedures to be determined.

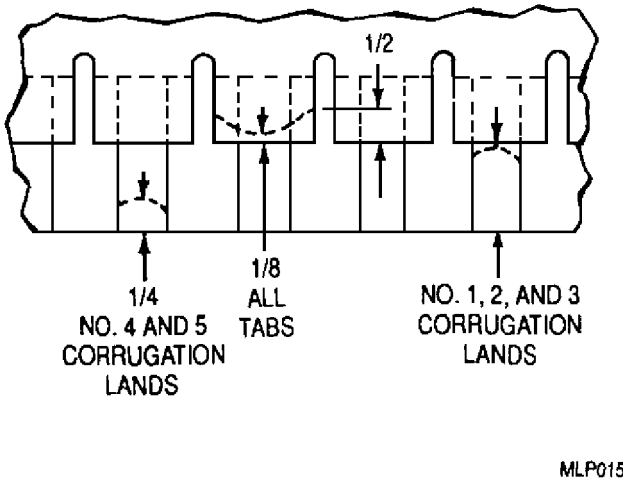

Figure 14. Burn and Erosion Limits for Liner Tab Ends and Corrugations

Table 2. Quantity of Spotwelds

Position	Front Row	Rear Row
1st Corrugation	22	22
2nd Corrugation	21	21
3rd Corrugation	18	22
4th Corrugation	22	22
5th Corrugation	22	22

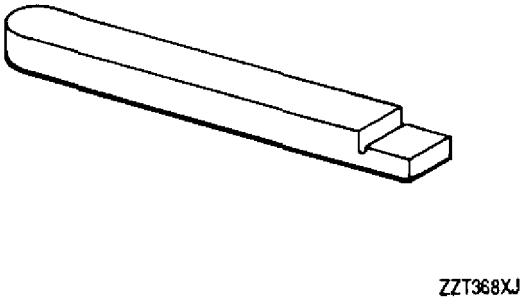

Figure 15. 6797613 Locating Template

DEPOT MAINTENANCE

INSPECTION AND REPAIR

COMBUSTION LINER SUPPORTS AND CROSSOVER TUBES

Reference Material

Magnetic Particle and Fluorescent Penetrant Inspection − Procedures . . . . . WP 017 00

Alphabetical Index

Subject **Page No.**

Combustion Liner Supports and Crossover Tubes 2
Inspection 2
Repair 2
Weld Repair 2
Introduction 2

Record of Applicable Technical Directives

None

1. **INTRODUCTION.**

2. This work package (WP) provides instructions for inspection and repair of the combustion liner supports and cross over tubes used in the combustion section of the T56−A−427 turboprop engine.

3. **COMBUSTION LINER SUPPORTS AND CROSSOVER TUBES.**

4. COMBUSTION LINER SUPPORTS AND CROSSOVER TUBES − INSPECTION.

a. Inspect liner supports and crossover tubes. Refer to table 1.

b. Refer to WP 017 00 for fluorescent penetrant inspection (FPI) procedures.

5. COMBUSTION LINER SUPPORTS AND CROSSOVER TUBES − REPAIR.

a. Repair liner supports and crossover tubes. Refer to Disposition column, table 1.

b. Replace liner supports and crossover tubes not within serviceable limits after repair.

Table 1. Liner Supports and Crossover Tubes − Inspection and Repair

Condition	Serviceable Limits	Repairable Limits	Disposition
Liner Supports:			
Wear on the 0.874−0.867 in. pilot diameter.	Max of 1/32 in. on each side.	Max of 0.050 in. on each side.	Repair liner supports. Refer to paragraph 6, this WP.
Cracks in body−to−mounting flange braze joint.	Continuous crack on top and below the flange not exceeding 0.375 in. in length. Continuous cracks appearing at both above and below the flange not exceeding 0.125 in. in length.	Not repairable.	Replace part exceeding serviceable limits.
Crossover Tubes:			
Wear.	Min flange thickness of 0.030 in.	Not repairable.	Replace part exceeding serviceable limits.

6. COMBUSTION LINER SUPPORTS AND CROSSOVER TUBES − WELD REPAIR.

Materials Required

Specification No./Part No.	**Nomenclature**
MIL−R−5031 class 13	Rod, welding
MIL−PRF−680, Type II	Solvent, Dry Cleaning

Dry Cleaning Solvent MIL−PRF−680, Type II **3**

a. Clean parts in MIL−PRF−680, type II, dry cleaning solvent and air dry.

b. Machine or grind repairable parts as shown in figure 1 to remove approximately 0.040 in. from original wall thickness. Clean up any depressions after machining to ensure satisfactory weld repair.

c. Buildup the machined or ground area with sufficient weld material for finishing to dimensions in figure 1.

d. Use tungsten inert gas arc method and MIL−R−5031, Class 13 weld rod, 0.045 in. diameter. Inert gas backup should be at approximately 10 cubic feet per hour flow to prevent oxidation in the event of a weld burn through the ID.

CAUTION

Make sure cooling is allowed between weld passes, or damage to the brazed joint at the mounting flange will occur.

e. Apply a weld bead approximately 0.093 − 0.125 in. wide for 90° around the circumference. The 90° sector opposite the first bead should be welded and allowed to cool to 500−600°F (260−316°C).

f. The remaining two 90° sectors should then be welded as in step e, and the part allowed to cool.

g. Add successive layers of weld beads as required, following the instructions in steps e and f. Use care at the lower edge of the part to ensure that a 1/32 in. radius can be machined from the weld build−up.

h. Grind the welded area to diameter and surface finish shown in figure 1. Grind end flush with original surface.

i. Check the two, 3/8 in. diameter holes for sharp edges; de−burr if necessary. Visually inspect the inside of the support for burred or loose welds.

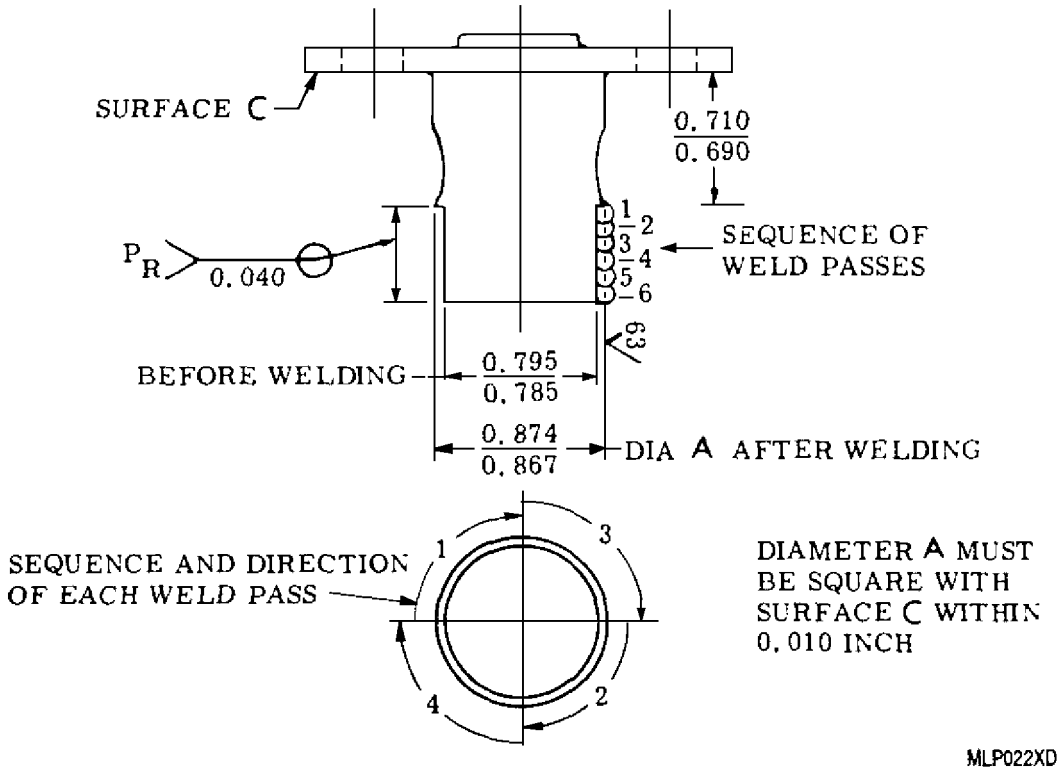

Figure 1. Combustion Liner Support and Igniter Liner Support Weld Repair

DEPOT MAINTENANCE

INSPECTION AND REPAIR

COMBUSTION CHAMBER INNER CASING

Reference Material

Magnetic Particle and Fluorescent Penetrant Inspection − Procedures . . . . . WP 017 00
Plating and Surface Treatment of Parts . . . . . WP 018 00
Pressure Testing, Hydraulic . . . . . AMS 2615

Alphabetical Index

Subject **Page No.**

Combustion Chamber Inner Casing 2
Inspection 2
Repair 2
Introduction 2

Record of Applicable Technical Directives

None

1. **INTRODUCTION.**

2. This work package (WP) provides the instructions for inspection and repair of the combustion chamber inner casing in the combustion assembly on the T56−A−427 turboprop engine.

3. **COMBUSTION CHAMBER INNER CASING.**

4. COMBUSTION CHAMBER INNER CASING − INSPECTION.

Support Equipment Required

Part No./Type Designation	Nomenclature
6799818	Fixture, pressure test

a. Inspect combustion chamber inner casing. Refer to table 1 and the following:

(1) Using 6799818 pressure test fixture, test inner casing to 250 psi per AMS 2615 with pressure applied to external surfaces and pushing inward. No leakage acceptable. Weld repair leaks if not in bellows area (figures 1 and 2).

b. Refer to WP 017 00 for fluorescent penetrant inspection (FPI) procedures.

5. COMBUSTION CHAMBER INNER CASING − REPAIR.

Materials Required

Specification No./Part No.	Nomenclature
AMS 5504	Sheet, Strip, and Plate
AMS 5776	Wire, welding
AMS 5777	Electrode, covered, welding
AWS A5.9	Rod, welding
MIL−E−6844, Class 6 or 9	Rod, welding
MIL−PRF−680, Type II	Solvent, Dry Cleaning

CAUTION

Make necessary provisions, such as copper shielding, moist clay pack, etc., to dissipate heat during any welding process.

a. Repair combustion chamber inner casing. Refer to Disposition column, table 1.

b. Replace inner casing not within serviceable limits after repair.

Table 1. Combustion Chamber Inner Casing − Inspection and Repair

Condition	Serviceable Limits	Repairable Limits	Disposition
Cracks:			
(1) Inner case liner brackets (figure 2).	Not serviceable.	3/16 in. max length.	Blend surface cracks and weld repair using gas tungsten arc weld (GTAW) method and AMS 5776 welding wire or metallic arc weld with an AMS 5777 welding electrode. For through−cracks exceeding repairable limits saw off portion of bracket not welded to inner case. Grind along outside of cut to form a V−groove. Locally fabricate a suitable repair piece using AMS 5504 material and weld in place using GTAW process with AMS 5776 weld wire or metallic arc weld with an AMS 5777 welding electrode (figure 2).
(2) Body.	Not serviceable.	Any crack.	Repair cracks as follows: a. Drill 1/16 in. dia holes through the ends of the crack.

Table 1. Combustion Chamber Inner Casing − Inspection and Repair (contd)

Condition	Serviceable Limits	Repairable Limits	Disposition
Cracks: (contd)			
(2) Body. (contd)			b. If the crack is in the area of a double layer of metal, grind a V−groove along the crack from the inside of the casing. The groove shall be 0.032−0.062 in. wide and must be ground through the inner layer and halfway through the outer layer.
	Dry Cleaning Solvent MIL−PRF−680, Type II		**3**
			c. Clean the area adjacent to the groove with a stainless steel brush and MIL−PRF−680, Type II dry cleaning solvent.
			d. Tack weld at 1 1/2 in. intervals any crack which exceeds 3.00 in. in length. Start weld at ends of the crack and work toward the center. Keep weld build−up to a minimum. Use inert gas arc welding process and AMS 5776 welding wire. Pressure check the assembly per paragraph 4, this WP.
(3) Bellows area.	Not serviceable.	Not repairable.	Condemn inner casing exceeding serviceable limits.
(4) Front and rear flange attaching welds.	Not serviceable.	Any cracks.	Remove cracks by blending and repair weld using inert gas arc method and AWS A5.9 welding rod or metallic arc method with an MIL−E−6844, class 6 or 9, welding electrode. Pressure check the assembly per paragraph 4, this WP. Leakage is not acceptable.
	Dry Cleaning Solvent MIL−PRF−680, Type II		**3**
Corrosion.	Not serviceable.	Surface corrosion without pitting.	Clean inner casing with MIL−PRF−680, Type II dry cleaning solvent and remove surface corrosion with stainless steel brush. Condemn any part with pitting.

Table 1. Combustion Chamber Inner Casing − Inspection and Repair (contd)

Condition	Serviceable Limits	Repairable Limits	Disposition
Inner casing manufactured prior to change letter AB:			
(1) Seal ring seat at the compressor end (figure 3).	Ring seat ID of 5.470−5.480 in.	Less than 5.470 in.	Machine ring seat per figure 3. Mark change letter AB after part number.
(2) Seal ring groove at the turbine end (figure 3).	Ring groove ID of 10.030−10.035 in.	Less than 10.030 in.	Machine ring groove per figure 3. Mark change letter AB after part number.
Inner casing front flange piston ring grooves wear or damage.	a. Wear is acceptable providing the width of the grooves does not exceed 0.269 in. and the surface finish is at least 32 RMS. b. Nicks, dents, or deformation in the edge of the aft side of the ring grooves are acceptable provided they do not extend down into the ring groove more than half the depth of the ring groove. No damage is allowed on the front side of the ring grooves.	Exceeds serviceable limits.	a. Wear shall be cleaned up without exceeding a ring groove width of 0.269 in. and shall provide a surface finish of at least 32 RMS. b. Damage shall be removed by polishing local areas. Rework areas shall not extend deeper than half the groove depth. Machine a new front flange per figures 1 and 2 if serviceable limits are exceeded. Pressure test new front flange per paragraph 4, this WP.
Damaged aluminum coating on inner casing.	No damage acceptable.	Any damaged area.	Recondition aluminum coating per WP 018 00 including the post curing bake cycle. Inner casing to be processed all over except front and rear machined details.
Wear under liner brackets.	Max depth of 0.010 in.	Exceeds serviceable limits.	Remove bracket. Weld repair using inert gas arc welding process with AMS 5776 welding wire. Apply filler material in a continuous small bead starting around outer edge of worn area and finish at center. Blend weld buildup on outer surface to within 0.005 in. flush with adjacent OD. Weld penetration on casing ID may protrude 1/16 in. inward. Replace liner bracket per figure 2. Stress relieve after welding at 1050°F (565°C) in a neutral atmosphere furnace for a minimum of one hour. Air cool. Pressure test per paragraph 4, this WP.

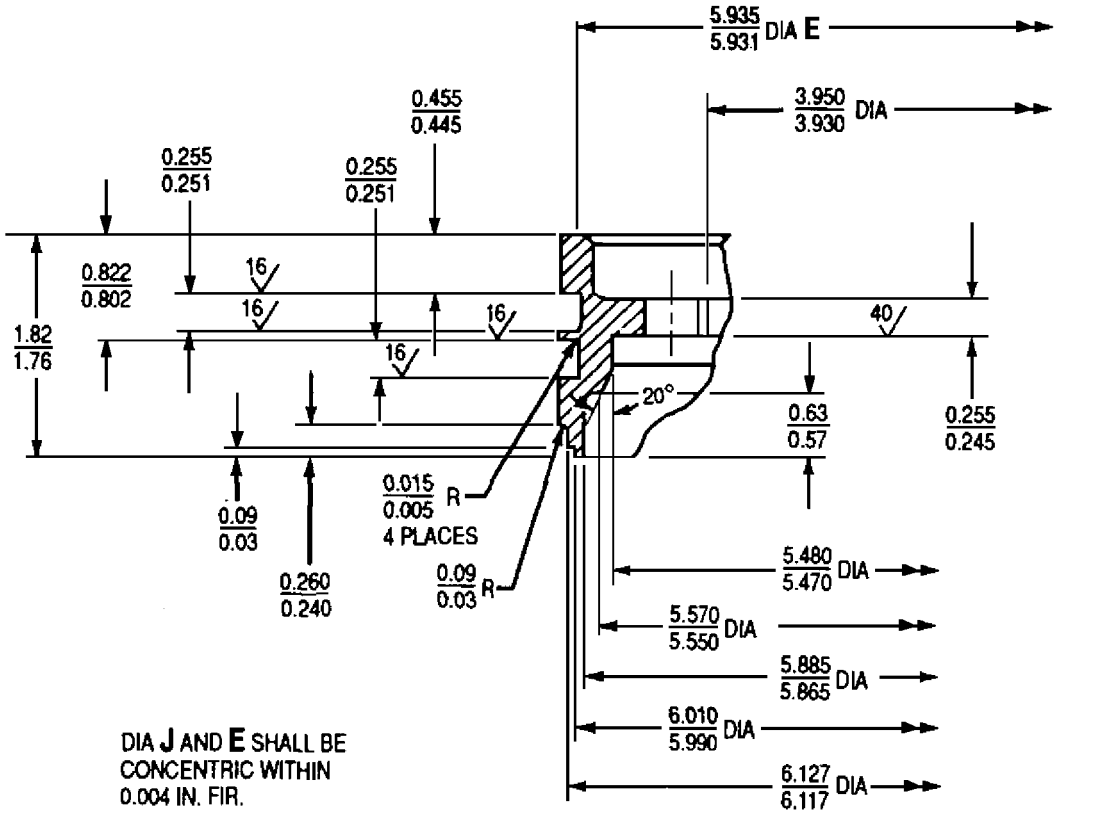

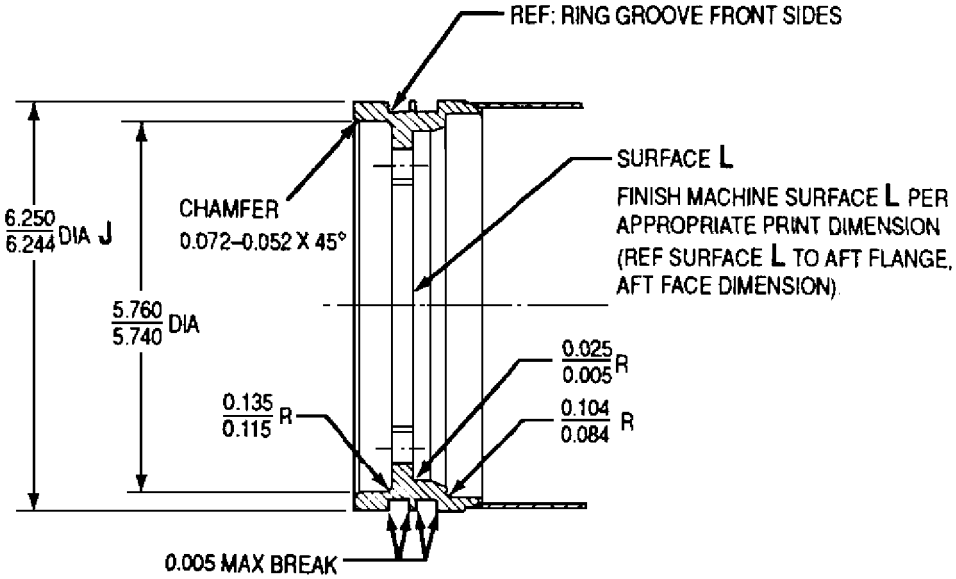

Figure 1. Combustion Chamber Inner Casing Forward Flange Details

MLP044XA

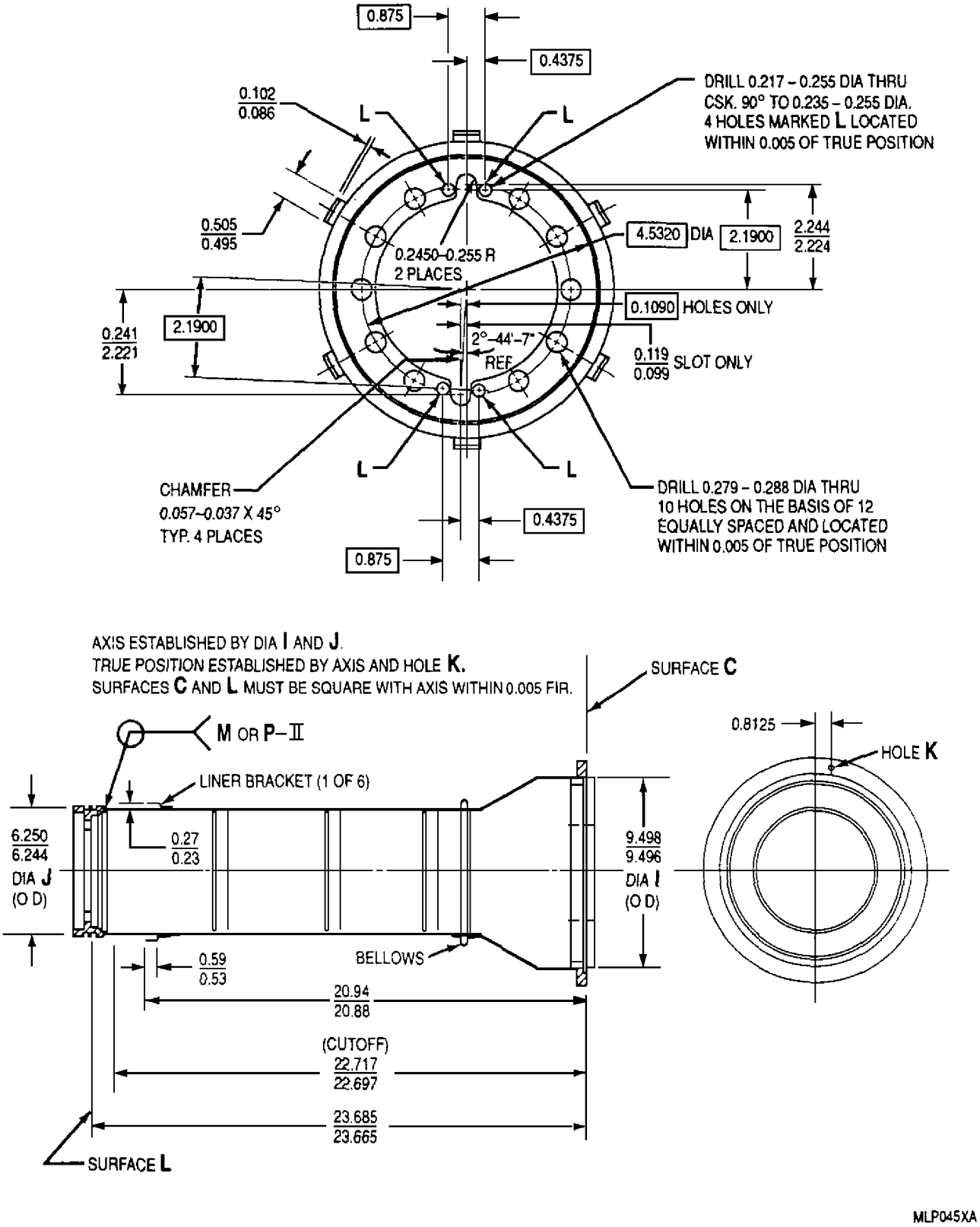

Figure 2. Combustion Chamber Inner Casing Forward Flange and Liner Bracket Details

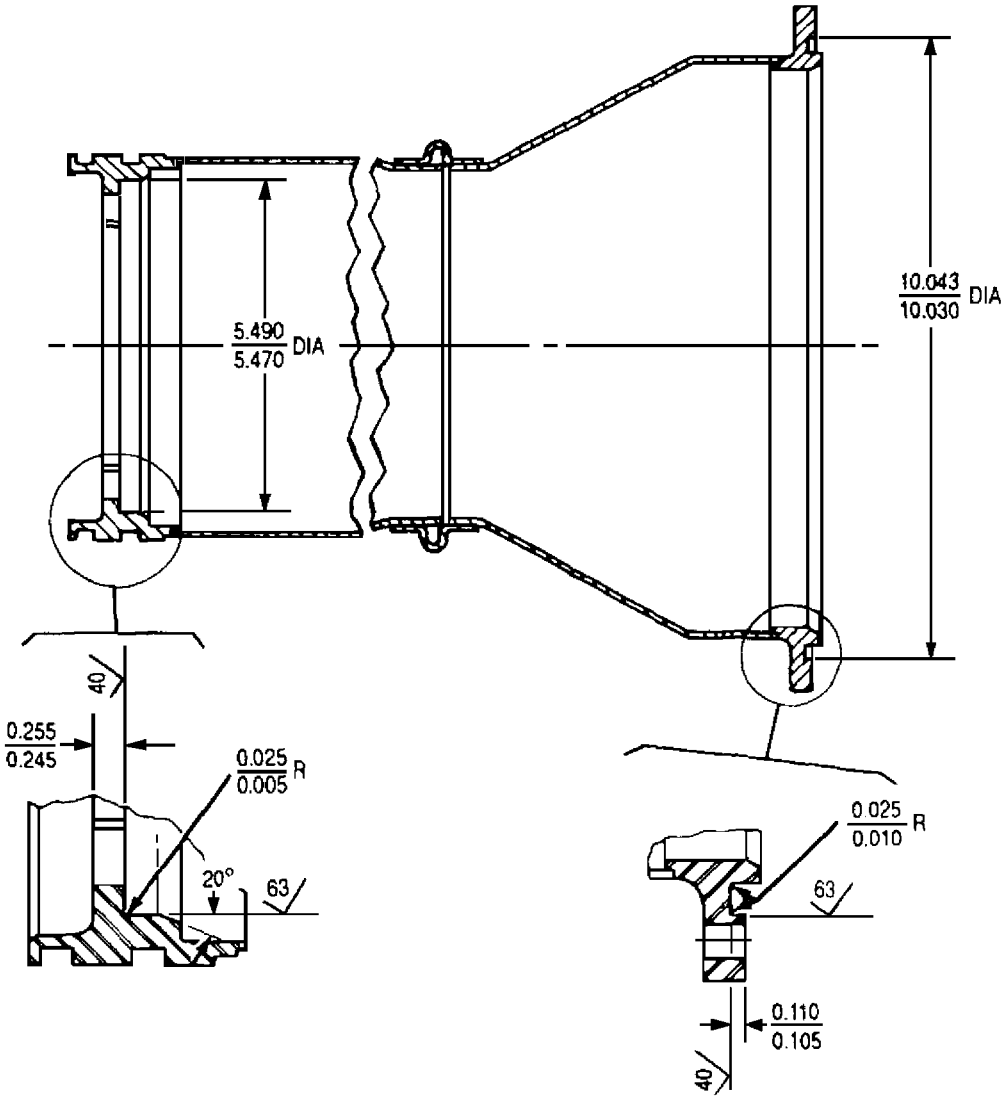

Figure 3. Combustion Chamber Inner Casing Modification Change Letter AB

DEPOT MAINTENANCE

INSPECTION AND REPAIR

COMBUSTION CHAMBER INNER CASING LINER

Reference Material

Magnetic Particle and Fluorescent Penetrant Inspection − Procedures . . . . . WP 017 00
Pressure Testing . . . . . AMS 2602

Alphabetical Index

Subject **Page No.**

Combustion Chamber Inner Casing Liner 2
Body and Flange Crack Weld Repair 3
Body Weld Repair 3
Flange Attaching Weld Repair 4
Inspection 2
Pressure Testing 3
Repair 2
Introduction 2

Record of Applicable Technical Directives

None

1. **INTRODUCTION.**

2. This work package (WP) provides the instructions for inspection and repair of the combustion chamber inner casing liner used in the T56−A−427 turboprop engines.

3. **COMBUSTION CHAMBER INNER CASING LINER.**

4. COMBUSTION CHAMBER INNER CASING LINER − INSPECTION.

a. Inspect inner casing liner. Refer to table 1.

b. Refer to WP 017 00 for fluorescent penetrant inspection (FPI) procedures.

5. COMBUSTION CHAMBER INNER CASING LINER − REPAIR.

Materials Required

Specification No./Part No.	Nomenclature
MIL−PRF−680, Type II	Solvent, Dry Cleaning

a. Repair inner casing finer. Refer to Disposition column, table 1.

b. Replace inner casing liner not within serviceable limits after repair.

Table 1. Combustion Chamber Inner Casing Liner − Inspection and Repair

Condition	Serviceable Limits	Repairable Limits	Disposition
Pressure test:			
Inner casing liner.	No leakage.	Weld repair (excluding bellows area).	Pressure test liner per paragraph 6, this WP. Weld repair per paragraph 8 or 9, as applicable, this WP.
Inner casing piston ring grooves worn or damaged.	a. Wear− Max groove width of 0.269 inch and surface finish of at least 32 RMS micro inch. b. Damage− Nicks, dents or deformation extending down the aft side of the ring grooves a maximum of 1/2 the depth. No damage allowed on the front side of the ring grooves.	If the front ring groove exceeds the serviceable limit, but does not exceed 0.290 inch, machine a new ring groove between the two existing ring grooves per figure TBD.	a. Clean up wear within serviceable limits, not to exceed 0.290 inch. If either groove cannot be worked without exceeding the serviceable limits, machine a new ring groove per figure TBD. b. Remove damage by polishing localized areas. Rework areas shall not exceed 1/2 the groove depth. If either groove cannot be worked without exceeding serviceable limits, machine new ring groove per figure TBD.
Cracks:			
Front and rear flange attaching welds.	Not serviceable.	All cracks.	Repair flange attaching weld. Refer to paragraph 9, this WP.
Bellows area.	Not serviceable.	Not repairable.	Condemn part exceeding serviceable limits.
Body (excluding bellows area).	Not serviceable.	All cracks.	Repair cracks. Refer to paragraph 8, this WP.

Table 1. Combustion Chamber Inner Casing Liner − Inspection and Repair (contd)

Condition	Serviceable Limits	Repairable Limits	Disposition
	Dry Cleaning Solvent MIL−PRF−680, Type II	**3**	
Corrosion.	Not serviceable.	Surface corrosion without pitting.	Clean inner casing liner with MIL−PRF−680, Type II dry cleaning solvent and remove surface corrosion with stainless steel brush. Condemn part with pitting.
Casing liner manufactured prior to change letter AE:			
Seal ring seat at the compressor end (figure 2).	Ring seat ID of 5.138−5.148 in.	Exceeds 5.148 in.	Machine ring seat per figure 2. Mark change letter AE after part number.
Seal ring seat at the turbine end (figure 2).	Ring seat OD of 8.280−8.285 in.	Less than 8.280 in.	Machine ring seat per figure 2. Mark change letter AE after part number.

6. COMBUSTION CHAMBER INNER CASING LINER − PRESSURE TESTING.

Support Equipment Required

Part No./Type Designation	Nomenclature
6799817	Fixture, pressure test

a. Install inner casing liner into 6799817 pressure test fixture (figure 1).

b. Test casing liner per AMS 2602.

7. COMBUSTION CHAMBER INNER CASING LINER − BODY AND FLANGE CRACK WELD REPAIR.

8. Body Weld Repair.

Materials Required

Specification No./Part No.	Nomenclature
AMS 5776	Wire, welding
TT−T−291	Mineral Spirits

CAUTION

Make necessary provisions, such as copper shielding, moist clay pack, etc., to dissipate heat during the welding process.

a. Drill 1/16 in. dia. holes through both ends of crack.

NOTE

For single layer metal go to step d, for double layer metal go to step b.

b. Grind a V−groove 0.032 − 0.062 in. wide along the crack through the first layer and half way through the second layer of metal.

Paint Thinner TT−T−291 **8**

c. Clean adjacent areas to the V−groove with a stainless steel brush and mineral spirits.

d. Tack weld crack at 1 1/2 in. intervals any crack which exceeds 3.00 in. in length.

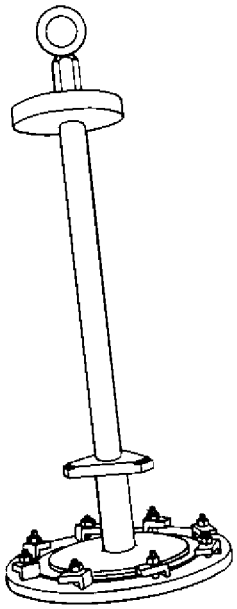

Figure 1. 6799817 Pressure Test Fixture

NOTE

Keep weld build−up to a minimum.

e. Using inert gas arc welding method with AMS 5776 welding wire, start welds at ends of cracks and work toward center.

9. Flange Attaching Weld Repair.

Materials Required

Specification No./Part No.	Nomenclature
AWS A5.9	Rod, welding
MIL−E−6844, class 6 or 9	Electrode, welding

a. Remove cracks by blending.

b. Weld repair cracks using inert gas arc welding method with AWS A5.9 welding wire or metallic arc weld with a MIL−E−6844, class 6 or 9 welding electrode.

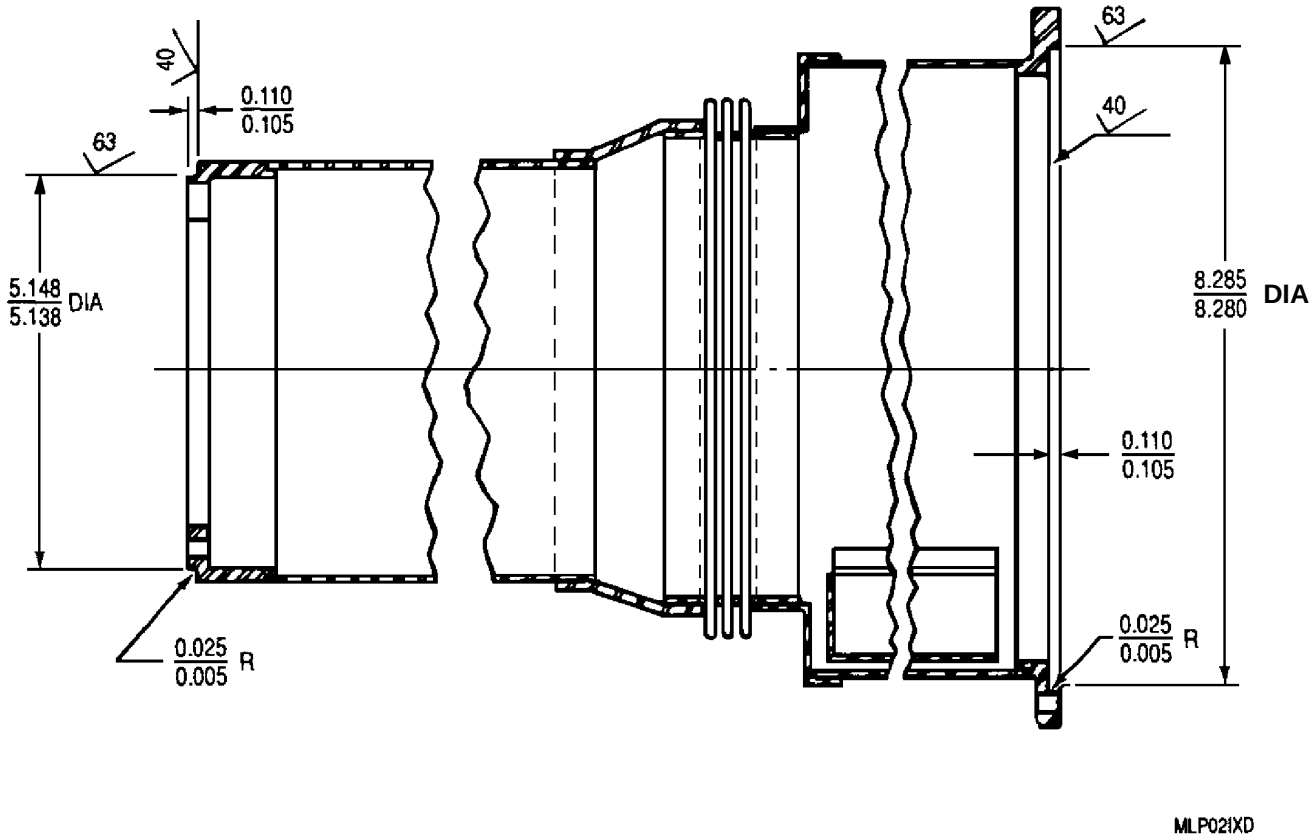

Figure 2. Combustion Chamber Inner Casing Liner Modification, Change Letter AE

DEPOT MAINTENANCE

INSPECTION AND REPAIR

TURBINE INLET CASING ASSEMBLY

Reference Material

Magnetic Particle and Fluorescent Penetrant Inspection − Procedures . . . . . WP 017 00
Maintenance . . . . . NAVAIR 02B−5DG−6−1
Turbine Unit Parts − Clean, Inspect and Repair . . . . . WP 054 00

Alphabetical Index

Subject **Page No.**

Introduction 2
Turbine Inlet Casing Assembly 2
Borescope Stud Replacement 5
Crack Weld Repair 5
Crack Removal and Preparation for Welding 5
Front and Rear Flange Bolt Hole 5
Front Bearing Support and Insulation Blanket Mounting Flange Bolt Hole 5
General Crack Welding Procedures 5
Piloting Key Slot 5
Strut 5
Dimension Inspection 3
Dowel Pin Replacement 8
Inspection 2
Locating Pin Replacement 8
Piloting Key Slot Wear Repair 8
Repair 2
Stress Relief After Weld Repair 8

Record of Applicable Technical Directives

None

1. **INTRODUCTION.**

2. This work package (WP) provides instructions for inspection and repair of the turbine inlet casing assembly used in the first−stage turbine inlet assembly on the T56−A−427 turboprop engine.

3. **TURBINE INLET CASING ASSEMBLY.**

4. TURBINE INLET CASING ASSEMBLY − INSPECTION.

a. Inspect turbine inlet casing assembly. Refer to table 1. Refer to WP 017 00 for fluorescent penetrant inspection (FPI) procedure.

b. Dimensionally inspect turbine inlet casing assembly. Refer to paragraph 6, this WP.

5. TURBINE INLET CASING ASSEMBLY − REPAIR.

a. Repair turbine inlet casing assembly. Refer to Disposition column, table 1.

b. Replace inlet casing assemblies not within serviceable limits after repair.

Table 1. Turbine Inlet Casing Assembly − Inspection and Repair

Condition	Serviceable Limits	Repairable Limits	Disposition
Turbine inlet casing assembly. FPI for cracks:			
Front flange bolt holes.	Not serviceable.	Not serviceable.	No repair authorized at this time. Retain parts for future repair capability.
Rear flange bolt holes.	Not serviceable.	Not serviceable.	No repair authorized at this time. Retain parts for future repair capability.
Front bearing support and insulation blanket mounting flange bolt holes.	Not serviceable.	Not serviceable.	No repair authorized at this time. Retain parts for future repair capability.
Piloting key slots.	Not serviceable.	Not serviceable.	No repair authorized at this time. Retain parts for future repair capability.
Struts and strut transition radii.	Not serviceable.	Not serviceable.	No repair authorized at this time. Retain parts for future repair capability.
All other areas.	Not serviceable.	Not repairable.	Replace inlet casing assembly.
Borescope studs:			
Loose or damaged (except threads).	Not serviceable.	Any amount.	Replace studs. Refer to paragraph 14, this WP.
Damaged threads.	Not serviceable.	Minor nicks and burrs.	Clean up nicks and burrs using a fine India stone or smooth file. Replace studs exceeding repairable limits. Refer to paragraph 14, this WP.
Dowel pin (vane and seal support locating):			
Loose or damaged.	Not serviceable.	Not repairable.	Replace pin. Refer to paragraph 15, this WP.

Table 1. Turbine Inlet Casing Assembly − Inspection and Repair (contd)

Condition	Serviceable Limits	Repairable Limits	Disposition
Locating pin (vane forward hanger):			
Loose or damaged.	Not serviceable.	Not repairable.	Replace pin. Refer to paragraph 16, this WP.
Piloting key slots:			
Wear.	0.5010 in. max width.	Exceeds serviceable limits.	Weld repair slot. Refer to paragraph 17, this WP.

6. TURBINE INLET CASING ASSEMBLY − DIMENSIONAL INSPECTION. (figure 1)

a. Dimensionally inspect turbine inlet casing assembly. Refer to table 2.

b. Record all dimensions and form tolerances taken during inspection. The results will determine serviceability of inlet casing and will be used to (comparison) check the inlet casing for distortion after weld repair.

c. Repair turbine inlet casing assembly. Refer to Disposition column, table 2.

d. Replace inlet casing assemblies not within serviceable limits after repair.

Table 2. Turbine Inlet Casing Assembly − Dimensional Inspection and Repair

Condition	Serviceable Limits	Repairable Limits	Disposition
Front flange (1, figure 1):			
Runout and thickness.	0.020 in. max runout FIR of Surface A in relation to Planes V and S. 0.250 in. min. thickness FIR and located within 4.650 in. min from Surface D.	Not serviceable.	No repair authorized at this time. Retain parts for future repair capability.
Combustion chamber inner case mounting flange (2, figure 1):			
Runout and thickness.	0.003 in. max runout FIR of Surface D in relation to Surface A and Dia. N. 0.20 in. min thickness at bolt hole bosses. 0.170 in. min thickness between bolt hole bosses.	Not serviceable.	No repair authorized at this time. Retain parts for future repair capability.

Table 2. Turbine Inlet Casing Assembly − Dimensional Inspection and Repair (contd)

Condition	Serviceable Limits	Repairable Limits	Disposition
Rear flange (3, figure 1):			
Runout and thickness:	0.003 in. max runout FIR of Surface D in relation Surface A and Dia. N. 0.210 in. min thickness FIR and located 4.650 in. min from Surface A FIR.	Not serviceable.	No repair authorized at this time. Retain parts for future repair capability.
Turbine guide vane and seal support mounting flange (4, figure 1):			
Runout and thickness:	0.005 in. max runout FIR with Surface A and Dia. N. 0.20 in. min thickness at bolt hole bosses. 0.170 in. min thickness between bolt hole bosses and located 2.187 in. min from Surface D FIR.	Not serviceable.	No repair authorized at this time. Retain parts for future repair capability.
Front turbine bearing support and insulation blanket mounting flange (5, figure 1):			
Thickness.	0.210 in. min thickness and located 0.608 in. max from front lip face FIR.	Not serviceable.	No repair authorized at this time. Retain parts for future repair capability.
Combustion chamber outer case pilot dia. (6, figure 1):			
Runout.	0.004 in. max runout FIR with Surface A and Dia. N. 20.034 in. min dia. FIR.	Not serviceable.	No repair authorized at this time. Retain parts for future repair capability.
Combustion chamber inner case pilot dia. (7, figure 1):			
Runout.	0.004 in. max runout FIR with Surface A and Dia. N. 9.503 in. max dia. FIR.	Not serviceable.	No repair authorized at this time. Retain parts for future repair capability.
Front turbine bearing support pilot dia. (8, figure 1):			
Runout.	0.020 in. max runout FIR of Dia. N. in relation to Planes V and S. 9.254 in. max. dia. FIR.	Not serviceable.	No repair authorized at this time. Retain parts for future repair capability.

Table 2. Turbine Inlet Casing Assembly − Dimensional Inspection and Repair (contd)

Condition	Serviceable Limits	Repairable Limits	Disposition
First stage vane locating (pins) groove inner diameter (9, figure 1):			
Wear.	19.057 in. min diameter FIR.	Not serviceable.	No repair authorized at this time. Retain parts for future repair capability.
First stage vane locating (pins) groove outer diameter (10, figure 1):			
Wear.	19.356 in. max diameter FIR.	Not serviceable.	No repair authorized at this time. Retain parts for future repair capability.
Second stage vane groove inner pilot diameter (11, figure 1):			
Runout.	0.005 in. max runout FIR with Surface A and Diameter N. 19.530 in. min diameter FIR.	Not serviceable.	No repair authorized at this time. Retain parts for future repair capability.
Second stage vane groove outer pilot and retainer diameter (12, figure 1):			
Wear.	20.023 in. max diameter FIR.	Not serviceable.	No repair authorized at this time. Retain parts for future repair capability.
Turbine guide vane and seal support pilot diameter (13, figure 1):			
Runout.	0.005 in. max runout FIR of Diameter J in relation to Surface A and Diameter N. 9.503 in. max diameter FIR.	Not serviceable.	No repair authorized at this time. Retain parts for future repair capability.

7. TURBINE INLET CASING ASSEMBLY − CRACK WELD REPAIR. To be determined.

8. Crack Removal And Preparation For Welding. To be determined.

9. General Crack Welding Procedures. To be determined.

10. Front And Rear Flange Bolt Hole − Crack Weld Repair. To be determined.

11. Front Bearing Support And Insulation Blanket Mounting Flange Bolt Hole − Crack Weld Repair. To be determined.

12. Piloting Key Slot − Crack Weld Repair. To be determined.

13. Strut − Weld Repair. To be determined.

14. TURBINE INLET CASING ASSEMBLY− BORESCOPE STUD REPLACEMENT. Replace studs when required. Refer to NAVAIR 02B−5DG−6−1, WP 054 00.

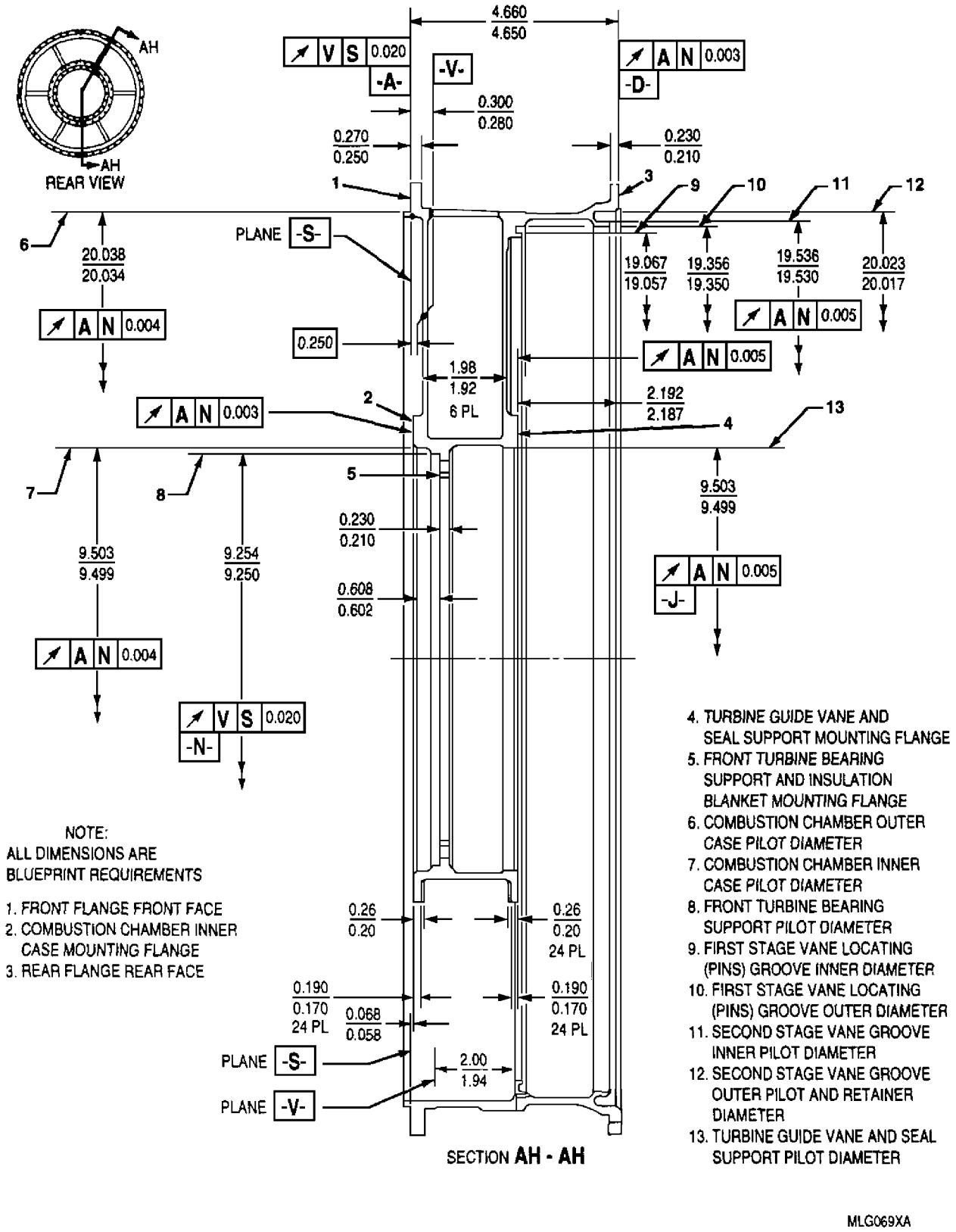

Figure 1. Turbine Inlet Casing Assembly − Dimensional Inspection

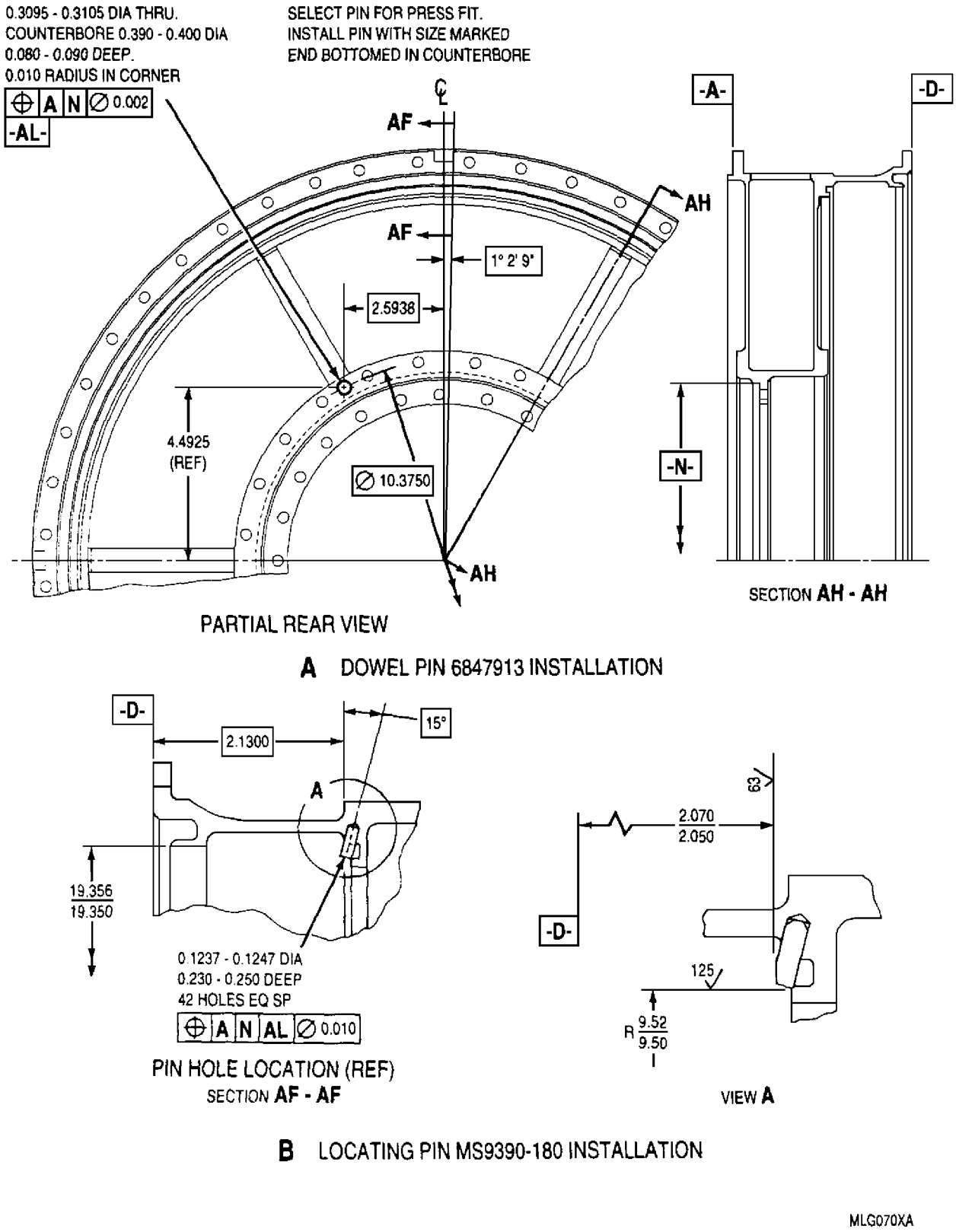

Figure 2. Turbine Inlet Casing Assembly − Dowel Pin and Locating Pin Replacement

15. TURBINE INLET CASING ASSEMBLY − DOWEL PIN REPLACEMENT. (figure 2)

Materials Required

Specification No./Part No.	Nomenclature
6847913	Pin, headless shouldered (AR)

a. Remove loose or damaged pin.

b. Measure pin hole diameter and select pin size to obtain a press fit. Pin sizes are:

NOTE

The pin size mark is located on the short end of the pin.

Diameter (in.)	Size Mark
0.3110 − 0.3115 (basic)	0
0.3120 − 0.3125 (+ 0.001)	1
0.3140 − 0.3145 (+ 0.003)	3
0.3200 − 0.3205 (+ 0.009)	9
0.3260 − 0.3265 (+ 0.015)	15

c. If pin hole needs to be enlarged to accommodate the selected pin size, locate pin hole to dimensions and true position requirements as shown (figure 2).

d. Install replacement pin with size marked end bottomed in counterbore.

16. TURBINE INLET CASING ASSEMBLY − LOCATING PIN REPLACEMENT. (figure 2)

Materials Required

Specification No./Part No.	Nomenclature
MS9390−190	Pin, straight headless (AR)

a. Remove loose or damaged pin. Do not damage pin hole.

b. Install replacement pin bottomed in pin hole.

c. Machine a flat area on pin diameter to meet surface texture requirement and dimension to Surface D as shown. (figure 2)

d. Machine end of pin, if necessary to meet surface texture requirement and radius dimension to axis as shown.

17. TURBINE INLET CASING ASSEMBLY − PILOTING KEY SLOT WEAR REPAIR. (figure 3)

Materials Required

Specification No./Part No.	Nomenclature
AMS 5832	Wire, welding
MIL−T−81533	Trichloroethane, 1, 1, 1

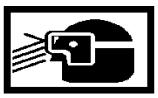

Trichloroethane MIL−T−81533 10

a. Clean slot using MIL−T−81533 1, 1, 1 trichloroethane.

b. Weld buildup wear area of slot using GTAW method and AMS 5832 welding wire. Buildup thickness shall be sufficient to obtain finish dimensions. Refer to figure 3.

c. Stress relieve turbine inlet casing assembly. Refer to paragraph 18, this WP.

d. Machine slot at location shown (figure 3).

e. Break slot sharp edges 0.010 in. maximum.

18. TURBINE INLET CASING ASSEMBLY − STRESS RELIEF AFTER WELD REPAIR. To be determined.

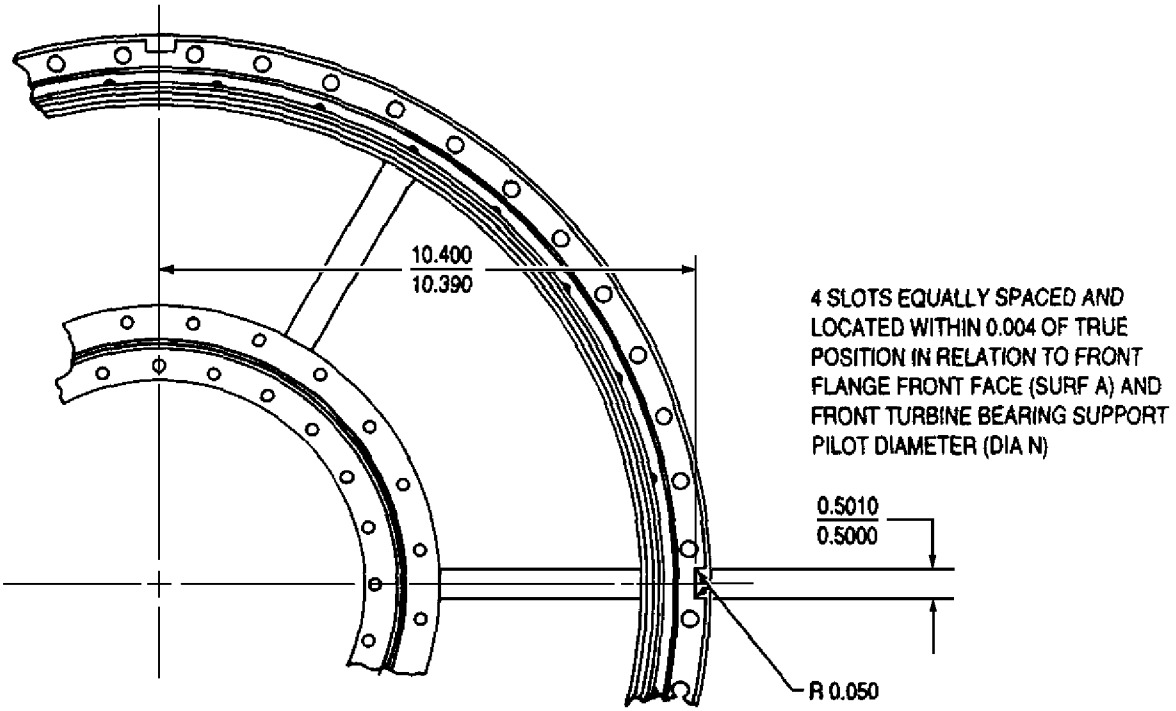

Figure 3. Turbine Inlet Casing Assembly − Piloting Key Slot Wear Repair

DEPOT MAINTENANCE

MAINTENANCE

FIRST-STAGE TURBINE INLET ASSEMBLY

Reference Material

Cleaning and Corrosion Treatment - Standard Practices . . . . . WP 008 00
Turbine Inlet Casing Assembly - Inspection and Repair . . . . . WP 092 00
Turbine Vane Assemblies - Inspection and Repair . . . . . WP 098 00
Turbine Guide Vane and Seal Support Assembly - Inspection and Repair . . . . . WP 099 00
Maintenance . . . . . NAVAIR 02B-5DG-6-1
Component Marking and Time Coding - Standard Practices . . . . . WP 011 00
Turbine Unit Parts - Clean, Inspect and Repair . . . . . WP 054 00
Identification Marking Methods AS478

Alphabetical Index

Subject **Page No.**

First-Stage Turbine Inlet Assembly 2
Assembly 4
Blade Track Radius Grinding (PPC-122 NINC) 8
Blade Track Radius Grinding (PPC-122 INC) 8
Blade Track Radius Measurement Before Disassembly (PPC-122 NINC) 2
Blade Track Radius Measurement Before Disassembly (PPC-122 INC) 2
Cleaning 4
Disassembly 2
Inspection and Repair 4
First-Stage Turbine Saddle 4
First-Stage Turbine Vane Assembly 4
Turbine First-Stage Vane Support Assembly 4
Turbine Inlet Casing Assembly 4
Introduction 2

Record of Applicable Technical Directives

Type/No.	Date	Title and ECP No.	Date Inc.	Remarks
PPC-122	1 Jul 04	First-Stage Turbine Vane Metal Blade Track	1 Sep 05	——

1. **INTRODUCTION.**

2. This work package (WP) provides maintenance instructions (vane assembly blade track radius measurement (before removal), disassembly, cleaning, inspection, assembly, and grinding the vane assembly blade track radius) for the First-Stage turbine inlet assembly used on the T56-A-427 turboprop engine. The inlet assembly is comprised of the following major components:

- Turbine inlet casing assembly
- Turbine first stage vane support assembly
- First-stage turbine vane assemblies
- First-stage vane turbine saddles
- First-stage vane air seal ring
- Front thermal insulation blanket
- First-stage turbine vane inner seal

3. **FIRST-STAGE TURBINE INLET ASSEMBLY.**

4. FIRST-STAGE TURBINE INLET ASSEMBLY - BLADE TRACK RADIUS MEASUREMENT BEFORE DISASSEMBLY (PPC-122 NINC).

Support Equipment Required

Part No./Type Designation	Nomenclature
23034291	Fixture, machining and inspection, turbine first-stage vane seal

NOTE

The detail dash numbers referenced in text are components of the 23034291 fixture. The three digit numbers are detail assemblies of the fixture and the two digit numbers are details of the assemblies.

a. If not marked (vibro peened), mark each vane assembly position location (figure 3) on lower tang using approved temporary marker. Refer to NAVAIR 02B-5DG-6-1, WP 011 00.

b. Place Detail -204 holding fixture assembly on bench.

c. Install Detail-203 loading ring assembly into front of turbine inlet casing and secure with Detail-26 hook clamps. Torque clamp bolts 105 - 115 lb in. (QA)

d. Load vanes rearward to set 0.196 in. basic dimension (figure 1) using Detail-12 socket head cap screws (12 places). Be sure basic dimension is set complete circumference of casing.

e. Install turbine inlet casing with loading ring down on holding fixture assembly. Secure with Detail-19 clamp plate and Detail-14 socket head caps screws. Torque screws 60 - 65 lb in. (QA)

NOTE

Keep Detail-200 indicator assembly stored in Detail-201 master gage assembly when not in use.

f. Measure blade track radius to requirements of figure 1 using Detail-200 indicator assembly. Record vane position number and blade track radius dimension.

g. Remove tooling from inlet casing.

h. Disassemble turbine inlet assembly.

5. FIRST-STAGE TURBINE INLET ASSEMBLY - BLADE TRACK RADIUS MEASUREMENT BEFORE DISASSEMBLY. (PPC-122 INC).

a. Procedure to be determined.

6. FIRST-STAGE TURBINE INLET ASSEMBLY - DISASSEMBLY. (figure 2)

Materials Required

Specification No./Part No.	Nomenclature
A-A-50493	Oil, penetrating

a. Apply A-A-50493 penetrating oil to threads of nuts (1, figure 2) and bolts (2) securing vane support assembly (3) to inlet casing assembly (16). Remove nuts and bolts.

b. Using three 1/4-28 jack screws separate and remove vane support assembly (3) along with vane assemblies (6), saddles (9), air seal ring (10), and vane inner seal (11) from inlet casing as an assembled unit.

c. Remove flat head screws (12) securing insulation blanket (15). Remove gang channel nuts (13 and 14) and insulation blanket.

d. Disassemble vane support assembled unit as follows:

(1) Apply A-A-50493 penetrating oil to threads of threads of nuts (4) and bolts (5) securing vane assemblies (6) to vane support assembly (3).

(2) Remove one-third to one-half of nuts (4) and bolts (5), vanes will loosen enough to permit removal of air seal ring (10) and vane inner seal (11).

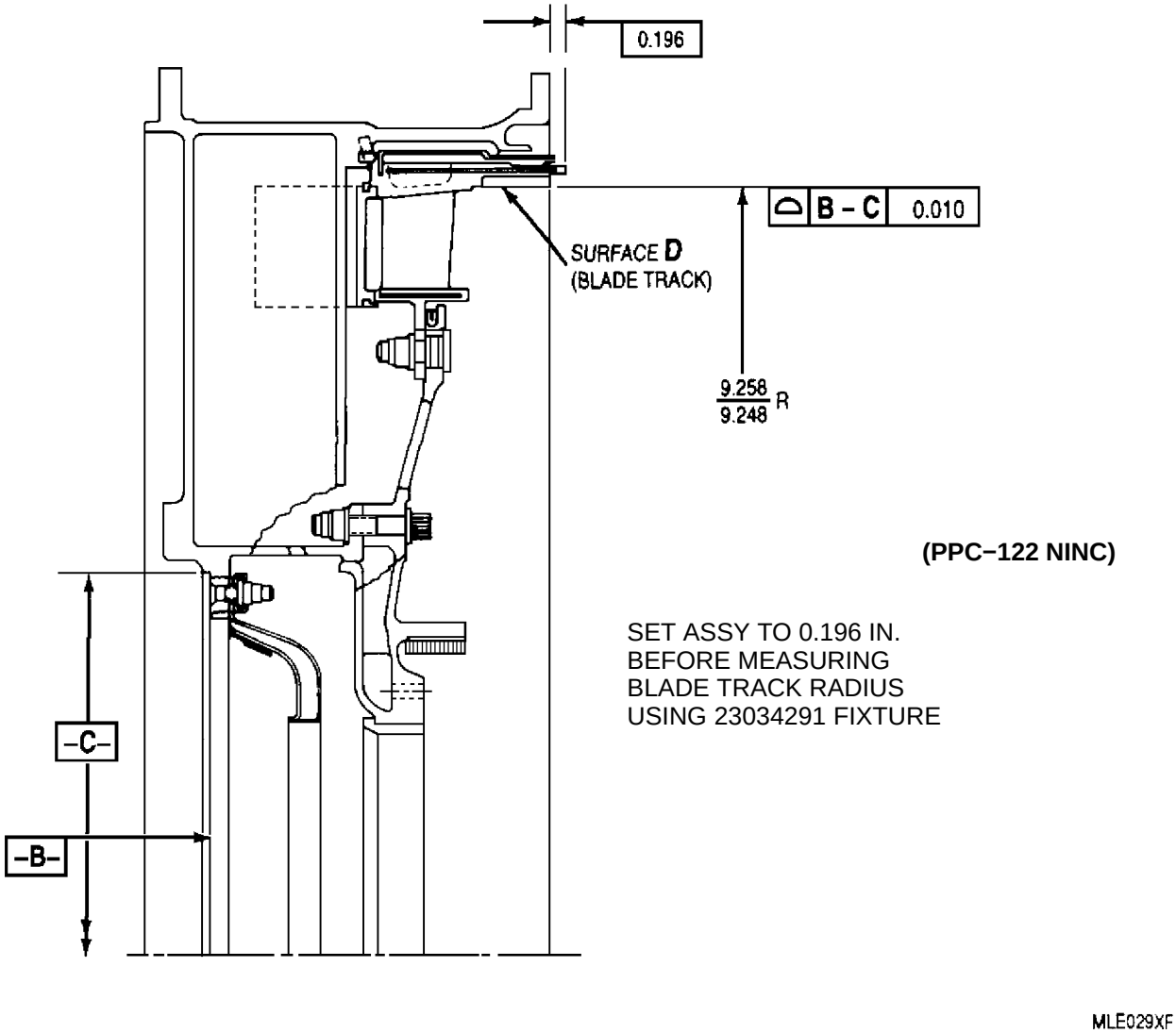

Figure 1. First−Stage Turbine Inlet Assembly − Measuring Blade Track Radius (Sheet 1)

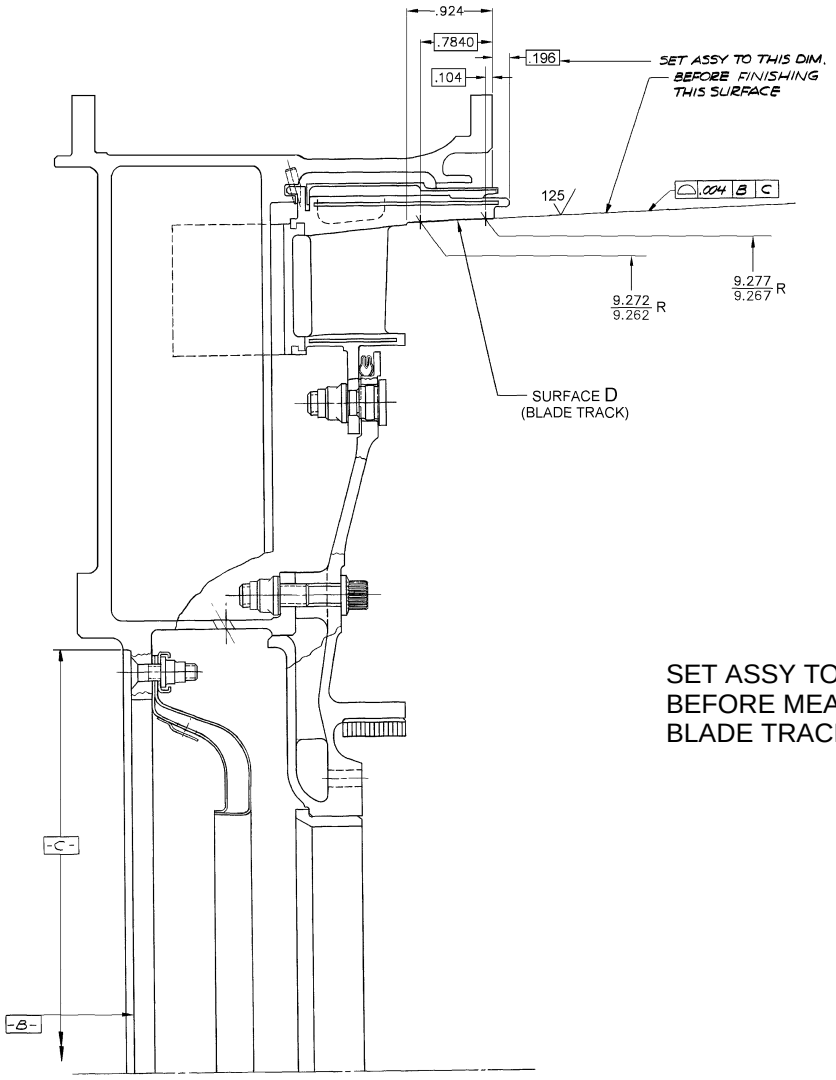

(PPC−122 INC)

SET ASSY TO 0.196 IN. BEFORE MEASURING BLADE TRACK RADIUS

Figure 1. First−Stage Turbine Inlet Assembly − Measuring Blade Track Radius (Sheet 2)

(3) Remove remaining nuts (4) and bolts (5).

(4) Disengage and remove vane assemblies (6) one at a time, along with inner and outer strip seals (7 and 8) and saddles (9).

(5) Remove inner vane seal (11), after removing the last vane.

e. X−out position location number (vibro peened) on lower tang of vane assembly. Refer to AS478, Method 2D.

7. FIRST−STAGE TURBINE INLET ASSEMBLY − CLEANING. Clean parts using vapor degreasing method. Refer to WP 008 00.

8. FIRST−STAGE TURBINE INLET ASSEMBLY − INSPECTION AND REPAIR.

9. First−Stage Turbine Vane − Assembly − Inspection and Repair. Refer to WP 098 00.

10. Turbine Inlet Casing Assembly − Inspection and Repair. Refer to WP 092 00.

11. Turbine First−Stage Vane Support Assembly − Inspection and Repair. Refer to WP 099 00.

12. First−Stage Turbine Saddle − Inspection and Repair. Refer to NAVAIR 02B−5DG−6−1, WP 054 00.

13. FIRST−STAGE TURBINE INLET ASSEMBLY − ASSEMBLY.

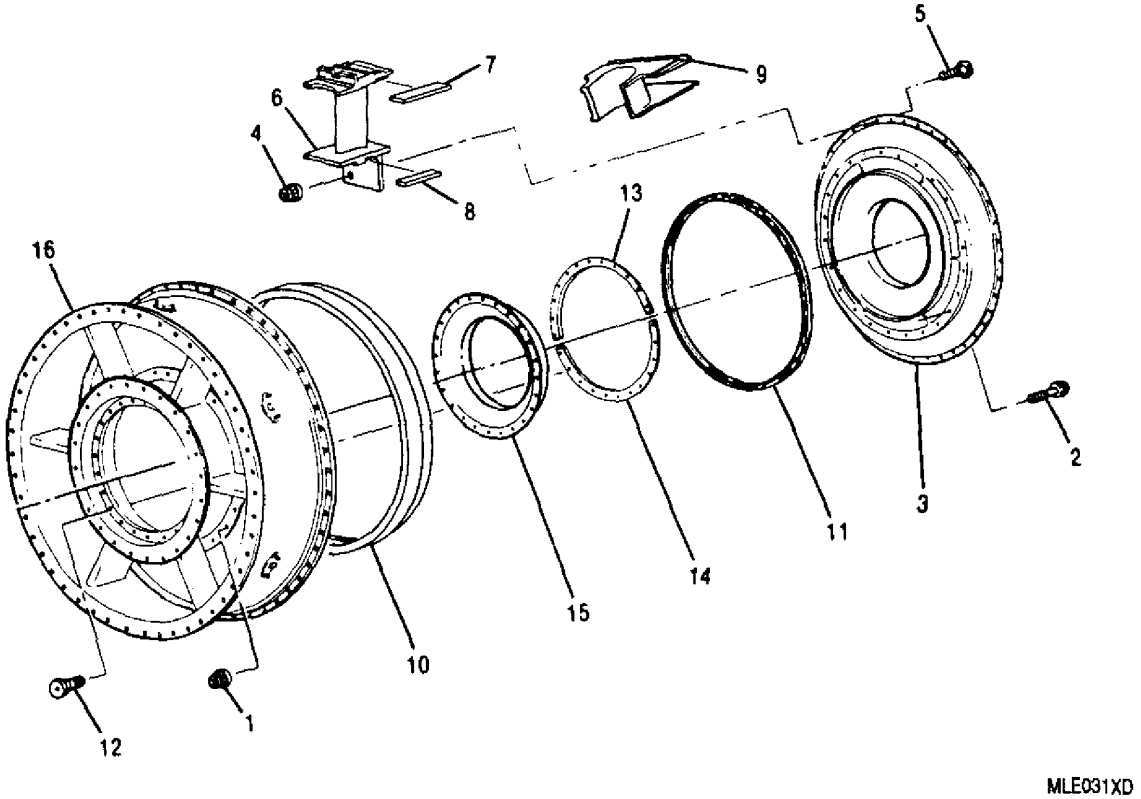

1. Self−locking Nut
2. Bolt
3. Turbine First−stage Vane Support Assembly
4. Self−locking Nut
5. Slab Head Shoulder Bolt
6. First−stage Turbine Vane Assembly
7. First−stage Turbine Vane Outer Band Strip Seal
8. First−stage Turbine Vane Inner Strip Seal
9. First−stage Turbine Saddle
10. First−stage Vane Air Seal Ring
11. First−stage Turbine Vane Inner Seal
12. Recessed Flat Head Screw
13. Gang Channel Nut (Upper)
14. Gang Channel Nut (Lower)
15. Front Thermal Insulation Blanket
16. Turbine Inlet Casing Assembly

Figure 2. First−Stage Turbine Inlet Assembly − Disassembly

Support Equipment Required

Part No./Type Designation	Nomenclature
23034291	Fixture, machining and inspection, turbine first−stage vane seal
23051225	Fixture, first−stage vane assembly
——	Wrench, torque (0−150 lb. in.)
——	Gloves, insulated

Materials Required

Specification No./Part No.	Nomenclature
MIL−A−907	Compound, thread, anti−seize
VV−P−236	Petrolatum, technical
——	Ice, dry

a. Install turbine front bearing support thermal insulation blanket (15) and secure with flat head screws (12), upper and lower gang channel nuts (13 and 14). Torque flat head screws 37−42 lb in. (QA)

b. Place 23051225 vane assembly fixture on bench. Install air seal ring (10, figure 2) in the groove of the fixture with forward edge (lip) up.

Petrolatum VV−P−236 32

c. Separate vane assemblies (6) into groups by part number. Install outer band strip seals (7) and inner strip seals (8) into applicable slots of each vane using a small amount of petrolatum to retain strip seals in position.

d. Install vane assemblies (6) into 23051225 vane assembly fixture one at a time with the blade track down and inside the ring, using assembly sequence pattern shown in figure 3. Install vanes with slot engaging lip of air seal ring (10). Be sure strip seals (7 and 8) are trapped in their slots by pushing vanes together.

CAUTION

Do not intermix saddle vane part numbers.

e. Install saddles (9, figure 2) into slots of vane assemblies (1, figure 3) as buildup progresses.

f. Push vane assemblies and saddles into tight circumferential engagement to provide clearance for installation of the last vane assembly.

g. Install last vane assembly then space all vane assemblies to obtain a uniform gap between vanes.

CAUTION

Care must be taken to prevent vane assemblies from moving during rotation.

NOTE

There are pins in the inlet casing assembly that engage the slots of the vanes.

h. Install turbine inlet casing assembly (16, figure 2) over the vane assembly buildup aligning the struts with the saddles (9). Lift casing and fixture and turn unit over (blade track up) and place on bench. Remove fixture.

i. Gently move individual vanes until all vanes are engaged with pins in casing.

j. Install inner vane seal (11) in place on the tangs of vanes (6). The seal will be retained by vane support assembly (3).

Dry Ice, BB−C−104 55

k. Freeze vane support assembly using dry ice. Install support assembly.

l. Secure support assembly to turbine inlet casing as follows:

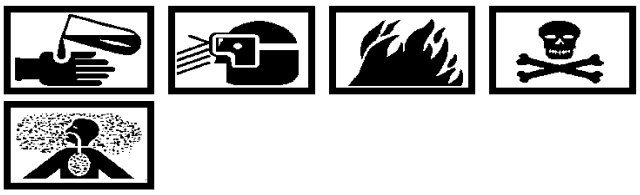

Compound, thread, Anti−seize MIL−A−907 59

(1) Apply Anti−seize compound to threads of bolts (2).

(2) Install bolts and nuts (1).

(3) Snug nuts and wait until support temperature normalizes.

(4) Torque nuts 74−89 lb in. (QA)

m. Secure vane assemblies to vane support assembly as follows:

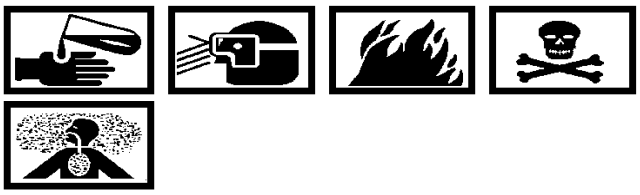

Compound, thread, Anti−seize MIL−A−907 59

(1) Apply Anti−seize compound to threads of slab head shoulder bolts (5).

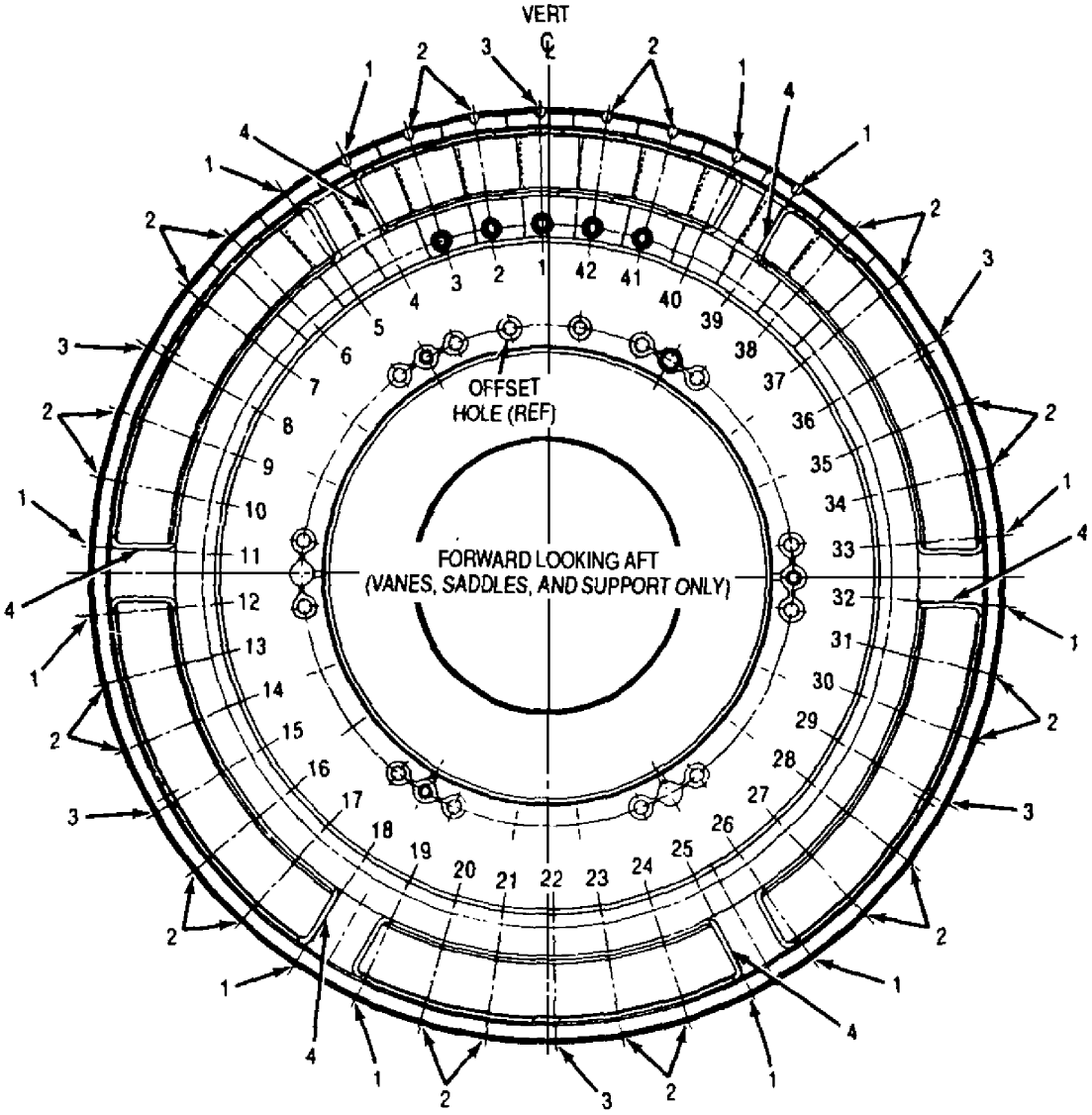

VANE AND SADDLE POSITION LOCATIONS

INDEX NO.	NOMENCLATURE	QTY	PART NO.	HOLE NO.
1	SADDLE VANE	12	23078439, 23076256, 23073824, 23032731	4, 5, 11, 12, 18, 19, 25, 26, 32, 33, 39, 40
2	STANDARD VANE	24	23078438, 23076255, 23073823, 23032721	2, 3, 6, 7, 9, 10, 13, 14, 16, 17, 20, 21, 23, 24, 27, 28, 30, 31, 34, 35, 37, 38, 41, 42
3	BORESCOPE PORT VANE	6	23078440, 23076257, 23073825, 23032741	1, 8, 15, 22, 29, 36
4	SADDLE	6	23009235, 23083416	Spans Vanes (1) at holes 4 & 5, 11 & 12, 18 & 19, 25 & 26, 32 & 33, 39 & 40 (Saddle configurations are not to be intermixed, but replaced as complete sets only)

Figure 3. First-Stage Turbine Inlet Assembly - Vane Assembly and Saddle Installation Locations

(2) Install bolts (heads at rear) and nuts (4).

(3) Torque nuts 74-89 lb in. (QA).

n. Grind blade track radius. Refer to paragraph 14 or 15, this WP.

14. FIRST-STAGE TURBINE INLET ASSEMBLY - BLADE TRACK RADIUS GRINDING (PPC-122 NINC).

Support Equipment Required

Part No./Type Designation	Nomenclature
23034291	Fixture, machining and inspection, turbine First-Stage vane seal
23034326	Mask, dust, First-Stage vane seal grinding
——	Wheel, diamond, cone
——	Wrench, torque (0-150 lb. in.)

Materials Required

Specification No./Part No.	Nomenclature
——	Stick, diamond wheel cleaning

NOTE

The detail dash numbers referenced in text are components of the 23034291 fixture. The three digit numbers are detail assemblies of the fixture and the two digit numbers are details of the assemblies.

a. Install Detail-204 holding fixture assembly on machine face plate and secure using standard hardware.

b. Set up face plate so Detail-33 locator is centered.

c. Install Detail-203 loading ring assembly into front of turbine inlet casing and secure with Detail-26 hook clamps. Torque clamp bolts 105 -115 lb in. (QA)

d. Install turbine inlet casing with loading ring down on holding fixture assembly. Secure with Detail-19 clamp plate and Detail-14 socket head cap screws. Torque screws 60-65 lb in. (QA)

e. Check for Detail-16 O-ring in place in groove of Detail-17 post.

f. Install 23034326 mask over Detail-17 post. Secure mask in position with 3 screws. Tighten screw fingertight.

g. Install Detail-202 ring assembly on rear flange of inlet casing and secure with Detail-23 clamps, Detail -24 plain washers, and Detail-25 socket head cap screws. Torque screws 105-115 lb in. (QA)

h. Grind blade track radius using a cone diamond wheel and the following parameters:

(1) Center grinding wheel on arbor.

(2) Operate grinding wheel clockwise at 4970 rpm and table counterclockwise at 52 rpm.

(3) Feed at 0.001 in. for every two table revolutions.

(4) Traverse head up and down grinding blade track in each direction. One complete traverse cycle is approximately 20 seconds.

(5) Continually clean wheel using diamond wheel cleaning stick.

(6) Water soluble coolant may be used as necessary.

i. For combination of serviceable and new vane assembly configuration. Grind blade track radius on new vane assemblies even with blade track radius of serviceable vane assemblies. Maintain requirements shown (figure 4).

NOTE

Keep Detail-200 indicator assembly stored in Detail-201 master gage assembly when not in use.

j. For complete new vane assembly configuration. Grind blade track to basic 9.253 in. radius. Maintain requirements shown (figure 4). Measure blade track radius using Detail-200 indicator assembly.

k. Remove turbine inlet casing and tooling from machine table. Remove fixture and mask from inlet casing.

15. FIRST-STAGE TURBINE INLET ASSEMBLY - BLADE TRACK RADIUS GRINDING (PPC-122 INC).

a. Grinding of first-stage turbine vane metal blade tracks is to be accomplished per Figure 4. (sheet 2). Blade track radius to be 9.267 (±0.002). Grind blade tips to achieve a radius of 9.233 (±0.002). After grind blade tip radial clearance shall be 0.034 (±0.004) at the leading edge and 0.039 (±0.004) at the trailing edge.

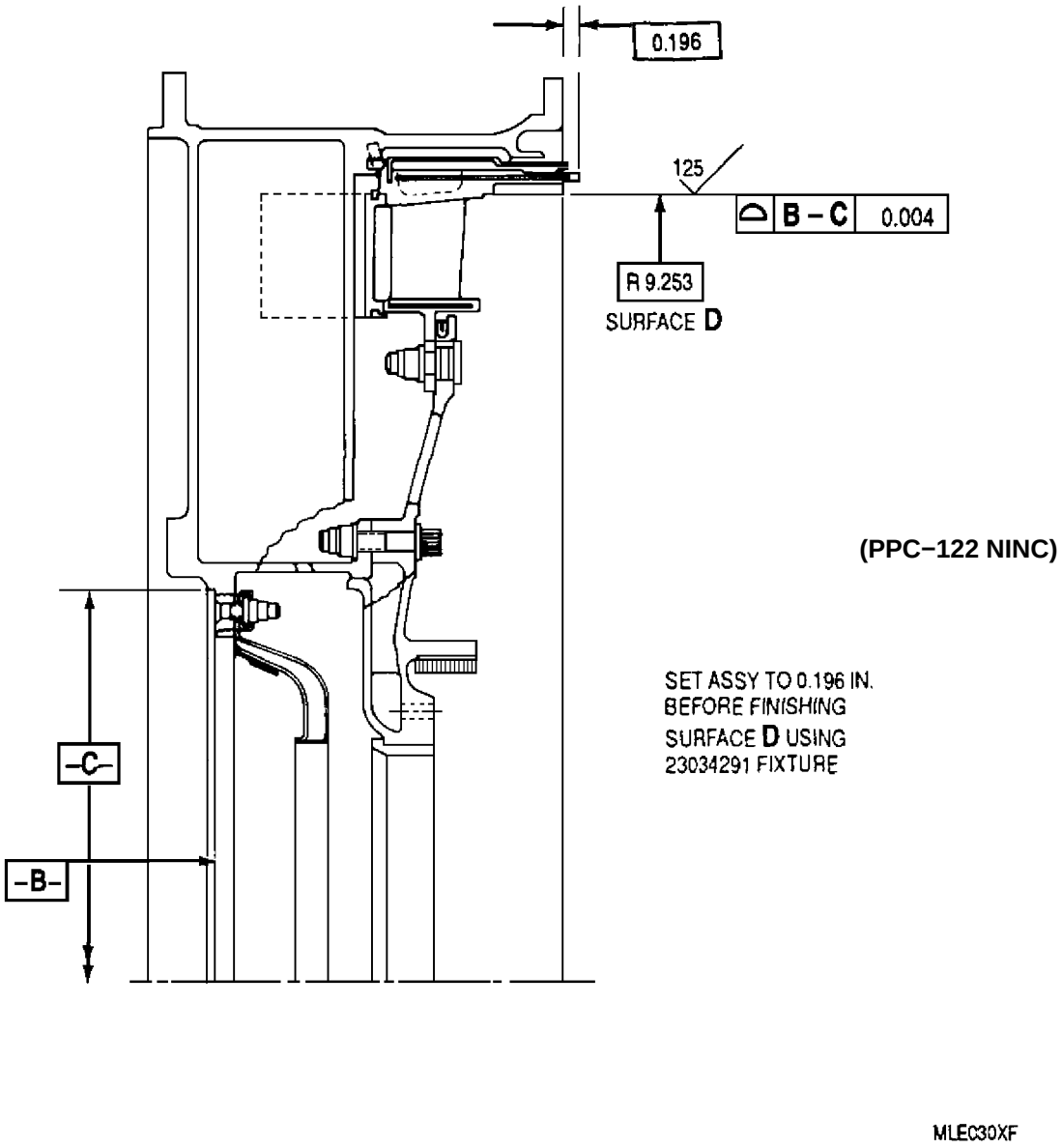

Figure 4. First−Stage Turbine Inlet Assembly − Machining Vane Blade Track Radius (Sheet 1)

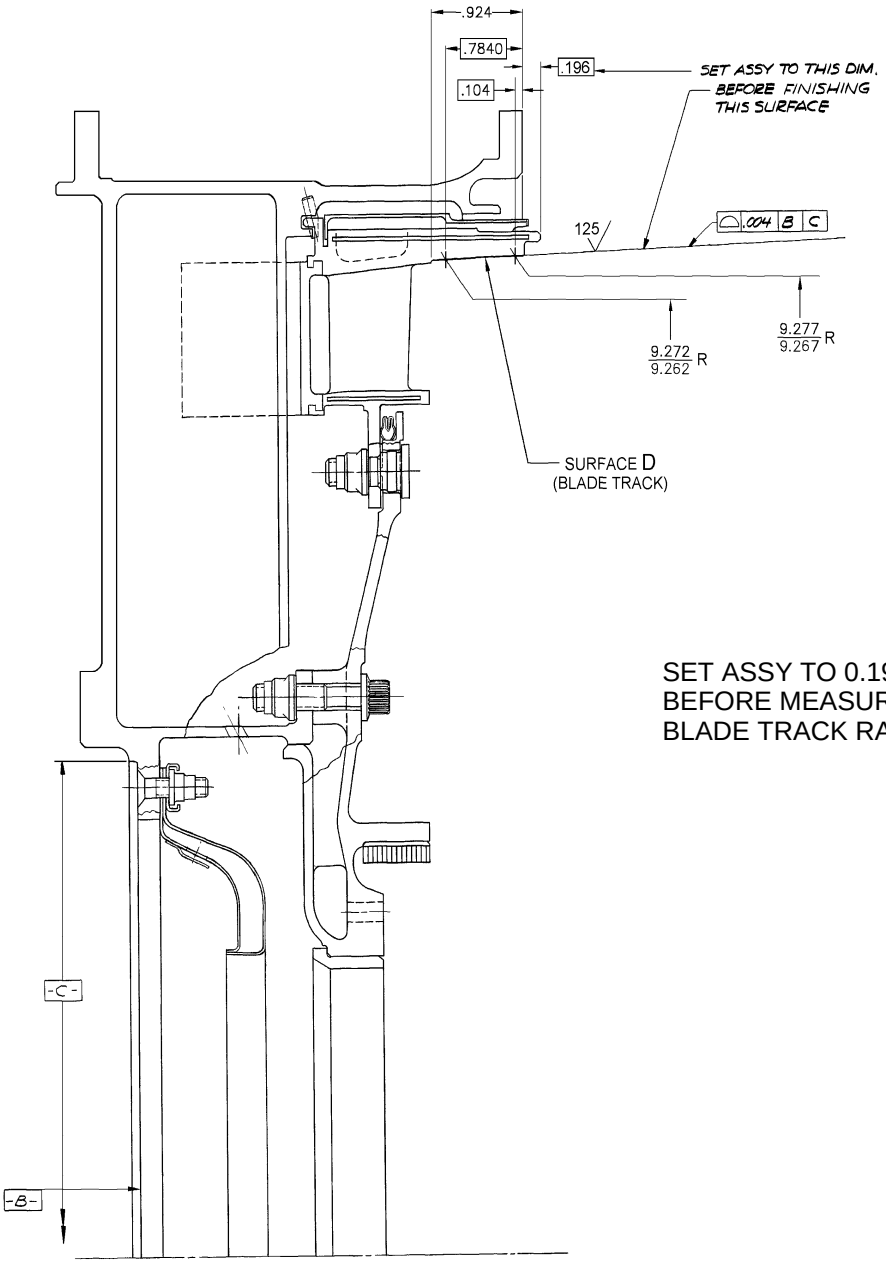

SET ASSY TO 0.196 IN.
BEFORE MEASURING
BLADE TRACK RADIUS

(PPC−122 INC)

Figure 4. First−Stage Turbine Inlet Assembly − Machining Vane Blade Track Radius (Sheet 2)

DEPOT MAINTENANCE

INSPECTION AND REPAIR

TURBINE FRONT BEARING SUPPORT

Reference Material

Magnetic Particle and Fluorescent Penetrant Inspection − Procedures . . . . . WP 017 00
Plating and Surface Treatment of Parts . . . . . WP 018 00
Contrast Dye Penetrant Inspection . . . . . AMS 2646

Alphabetical Index

Subject **Page No.**

Introduction 2
Turbine Front Bearing Support 2
Diameter B Repair 3
Diameter F Repair 3
Inspection 2
Repair 2

Record of Applicable Technical Directives

None

1. **INTRODUCTION.**

2. This work package (WP) provides the instructions for inspection and repair of the turbine front bearing support used on the T56−A−427 turboprop engine.

3. **TURBINE FRONT BEARING SUPPORT.**

4. TURBINE FRONT BEARING SUPPORT − INSPECTION.

a. Inspect turbine front bearing support. Refer to table 1.

b. Refer to WP 017 00 for fluorescent penetrant inspection (FPI) procedures.

5. TURBINE FRONT BEARING SUPPORT − REPAIR.

Materials Required

Specification No./Part No.	Nomenclature
AMS 6464	Rod, welding

a. Repair turbine front bearing support. Refer to Disposition column, table 1.

b. Replace turbine front bearing support not within serviceable limits after repair.

Table 1. Turbine Front Bearing Support − Inspection and Repair

Condition	Serviceable Limits	Repairable Limits	Disposition
Key slot wear.	Slot width of 0.400 in. max, with no steps in the slot sides. The sides shall be smooth and square with the bottom. Remove any high metal.	Any wear or scoring exceeding the serviceable limits.	Repair slot by building up worn area with AMS 6464 welding rod. Grind slot to the following dimensions. (1) Slot shall be 0.385−0.395 in. wide and 0.190−0.210 in. deep. (2) Maintain a 0.040−0.060 in. radius between the sides and bottom. (3) Rear corners of the slot shall have a 0.005−0.025 in. by 45 degree chamfer.
Crack emanating from key slot.	Not serviceable.	Any crack.	Grind crack away and buildup area with AMS 6464 welding rod. Grind slot to the following dimensions. (1) Slot width of 0.385−0.395 in. wide and 0.190−0.210 in. deep. (2) Maintain a 0.040−0.060 in. radius between the sides and bottom. (3) Rear corners of the slot shall have a 0.005−0.020 in. by 45 degree chamfer.

Table 1. Turbine Front Bearing Support − Inspection and Repair (contd)

Condition	Serviceable Limits	Repairable Limits	Disposition
Wear on width of Diameter B and Diameter F (figure 1).	0.8525 in. minimum width.	When width of Diameter B is less than 0.8525 in.	All signs of wear, scoring or metal pickup shall be removed by polishing, grinding, or machining. Keep material removal to a minimum. Bore width which is below 0.8525 in. may be restored by plating the front or rear face with chrome or electroless nickel and reground to 0.8645−0.8605 in. The front and rear faces of the bore must be parallel with each other within 0.001 in. FIR and square with the axis within 0.002 in. Plating thickness shall not exceed 0.015 in.
Rear seal bore wear, Diameter B (figure 1).	5.318 in. max diameter, provided wear is removed.	5.340 in. max diameter.	Repair seal bore per paragraph 6, this WP.
Bearing cage bore wear, Diameter F (figure 1).	4.757 in. max diameter, provided wear is removed.	4.767 in. max diameter.	Repair cage bore per paragraph 7, this WP.

6. TURBINE REAR BEARING SUPPORT − DIAMETER B REPAIR.

a. Machine seal bore, Diameter B, to remove wear step only, do not exceed a diameter of 5.340 in. (figure 1).

b. Chrome plate the bore per WP 018 00. Plating is optional on chamfered surface.

c. Grind bore within dimensions of Diameter B.

d. Diameter B must be concentric with Diameter F within 0.002 in. FIR.

e. Surface D must be square with Diameter F within 0.0005 in. per in.

f. Inspect chrome plate by contrast dye penetrant per AMS 2646.

7. TURBINE REAR BEARING SUPPORT − DIAMETER F REPAIR.

a. Mount bearing support in a grinder with OD of part running true.

b. Clean up Diameter F. Diameter must not exceed 4.767 in. (figure 1).

c. Repair the diameter with chrome plate per WP 018 00. Plating is optional on adjacent shoulders.

d. Finish grind Diameter F and adjacent shoulders.

e. Inspect chrome plate by contrast dye penetrant per AMS 2646.

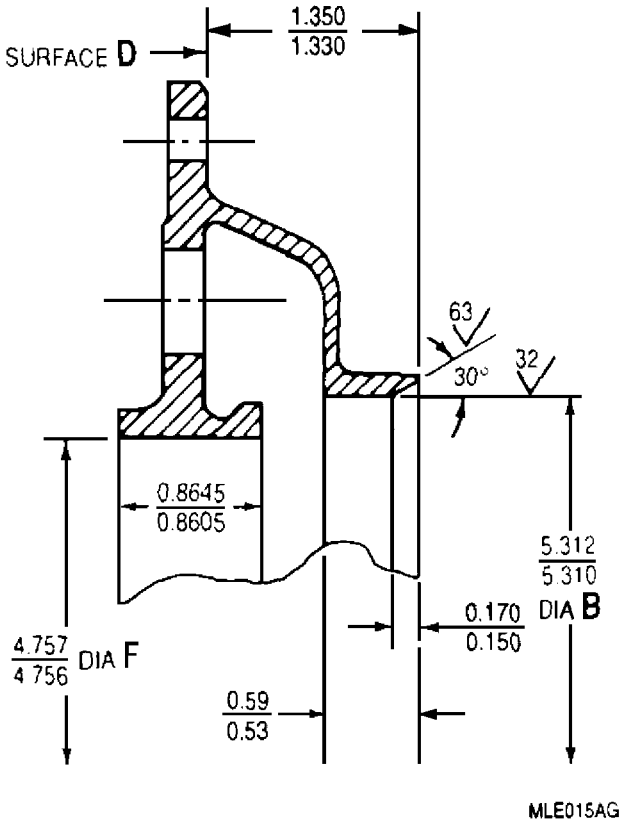

Figure 1. Turbine Front Bearing Support Repair

DEPOT MAINTENANCE

INSPECTION AND REPAIR

TURBINE FRONT BEARING VIBRATION DAMPER

Reference Material

None

Alphabetical Index

Subject **Page No.**

Introduction 2
Turbine Front Bearing Vibration Damper 2
Inspection 2
Repair 2

Record of Applicable Technical Directives

None

1. **INTRODUCTION.**

2. This work package (WP) provides the instructions for inspection and repair of the turbine front bearing vibration damper used on the T56−A−427 turboprop engine.

3. **TURBINE FRONT BEARING VIBRATION DAMPER.**

4. TURBINE FRONT VIBRATION DAMPER − INSPECTION.

a. Inspect vibration damper. Refer to table 1.

5. TURBINE FRONT VIBRATION DAMPER − REPAIR.

a. No repair permitted. Part must be a select fit with mating parts.

Table 1. Turbine Front Bearing Vibration Damper − Inspection

Condition	Serviceable Limits	Repairable Limits	Disposition
OD wear at lands.	With the vibration damper assembled in the bearing support, a 0.003 in. shim must not fit between the bearing support ID and any damper OD land.	Not repairable.	A serviceable vibration damper must be assembled with the bearing support and cage with which it was checked.
ID wear at lands.	With the vibration damper assembled on the bearing cage, a 0.003 in. shim must not fit between the cage OD and any damper ID land.	Not repairable.	A serviceable vibration damper must be assembled with the bearing cage and support with which it was checked.
Key slot wear.	0.425 in. maximum width and no burrs.	Not repairable.	Condemn part exceeding serviceable limits.

DEPOT MAINTENANCE

INSPECTION AND REPAIR

TURBINE FRONT BEARING CAGE ASSEMBLY

Reference Material

Magnetic Particle and Fluorescent Penetrant Inspection – Procedures . . . . . WP 017 00
Symbols for Welding, Brazing, and Nondestructive Examination . . . . . ANSI/AWS A2.4

Alphabetical Index

Subject **Page No.**

Introduction 2
Turbine Front Bearing Cage Assembly 2
Honeycomb Insert Replacement 7
Inspection 2
Repair 2

Record of Applicable Technical Directives

None

1. **INTRODUCTION.**

2. This work package (WP) provides the instructions for inspection and repair of the turbine front bearing cage assembly used on the T56-A-427 turboprop engine.

3. **TURBINE FRONT BEARING CAGE ASSEMBLY.**

4. TURBINE FRONT BEARING CAGE ASSEMBLY - INSPECTION.

Support Equipment Required

Part No./Type Designation	Nomenclature
6799837	Fixture-Checking, turbine rotor labyrinth seal

a. Inspect turbine front bearing cage assembly. Refer to table 1 and figure 1.

b. Refer to WP 017 00 for Fluorescent Penetrant Inspection (FPI) procedures.

5. TURBINE FRONT BEARING CAGE ASSEMBLY - REPAIR.

a. Repair turbine front bearing cage assembly. Refer to Disposition column, table 1.

b. Replace turbine front bearing cage assembly not within serviceable limits after repair.

Table 1. Turbine Front Bearing Cage Assembly - Inspection and Repair

Condition	Serviceable Limits	Repairable Limits	Disposition
MPI indication: Cracks.	Not serviceable.	Not repairable.	Condemn part exceeding serviceable limits.
Nicks and dents.		Nicks and dents are cause for repair.	Blend out nicks and dents.
Wear or damage to Surface A (figure 1).	0.001 in. max wear depth. Three chips having a 0.030 in. max radial length and a 0.080 in. max circumferential length are permissible provided there is at least 0.080 in. between chips.	Exceeds serviceable limits.	Condemn part exceeding serviceable limit.
Wear or damage to Surface R (figure 1).	4.624 in. min diameter. Three chips having a 0.030 in. max radial length and a 0.080 in. max circumferential length are permissible provided there is at least 0.080 in. between chips.	Exceeds serviceable limits.	Condemn part exceeding serviceable limit.

Table 1. Turbine Front Bearing Cage Assembly - Inspection and Repair (contd)

Condition	Serviceable Limits	Repairable Limits	Disposition
Wear or damage to Surface T (figure 1).	Three chips having a 0.030 in. max radial length and a 0.080 in. max circumferential length are permissible provided there is at least 0.080 in. between chips.	Exceeds serviceable limits.	Condemn part exceeding serviceable limit.
Wear or damage to Diameter B (figure 1).	1. Localized nicks, dents or scratches up to 0.005 in. in depth are acceptable after blending. Total of circumferential lengths of all nicks, dents, and scratches must not exceed 1.00 in., with maximum length of any one not to exceed 0.060 in. 2. Localized areas of plate chipping are acceptable providing the total of circumferential widths of all areas does not exceed 1.00 in. with maximum width of any one not to exceed 0.060 in. Plating adjacent to chipped areas must be firmly bonded to parent metal. 3. Localized damage may extend full axial length of Diameter B. 4. The average of at least four diameters, measured in undamaged areas, shall not exceed 4.1853 in.	Exceeds serviceable limits.	Condemn assembly exceeding serviceable limits.

Table 1. Turbine Front Bearing Cage Assembly - Inspection and Repair (contd)

Condition	Serviceable Limits	Repairable Limits	Disposition
Wear or damage to Surface X (Figure 1). Use detail -201, -202, and -205 of the 6799837 checking fixture to inspect the seal diameter.	3.285 in. max ID.	Exceeds serviceable limits.	Condemn part exceeding serviceable limit.
Front and rear seal ring grooves:			
Wear and chipped or missing flame plating.	Maximum width of 0.256 in. providing flame plating is not worn through. Any amount of chipped or missing flame plating in bottom of ring grooves is acceptable provided front side walls are not damaged.	0.010 in. maximum wear on each side of groove or chipping of flame plating on groove land.	Condemn part exceeding serviceable limit.
Groove taper.	0.003 in. max.	Exceeds serviceable limits.	Condemn part exceeding serviceable limit.
Snap ring groove wear.	4.479 in. min. ID.0.084 in. max width.	Exceeds serviceable limits.	Condemn assembly exceeding serviceable limits.
Honeycomb insert wear.	4.348 in. max ID. No delamination. Depth of grooving does not contact attaching braze material. Grooved or crushed cells do not exceed 20% of surface area.	Exceeds serviceable limits.	Replace honeycomb insert per paragraph 6, this WP.

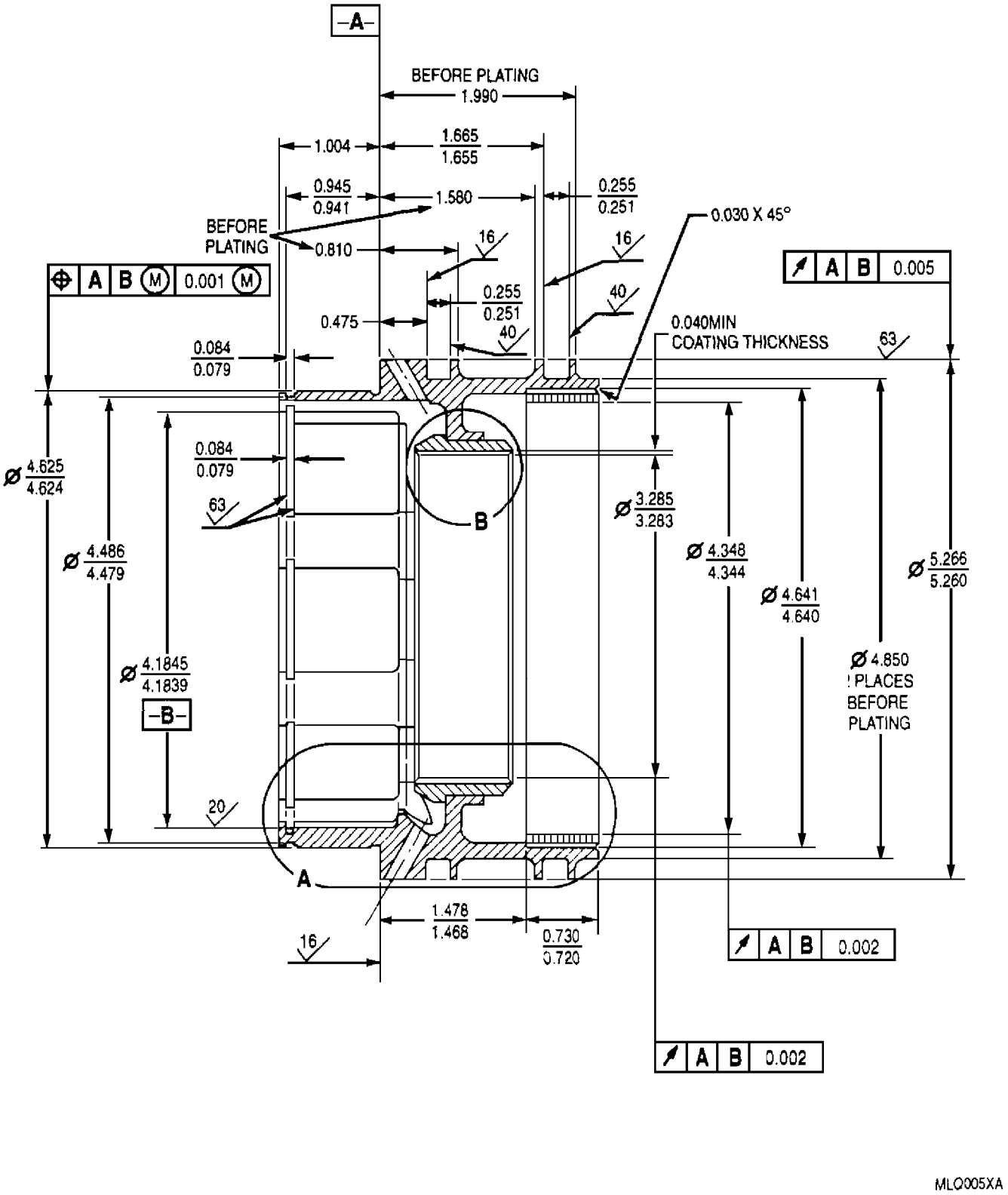

Figure 1. Turbine Front Bearing Cage Repair (Sheet 1 of 2)

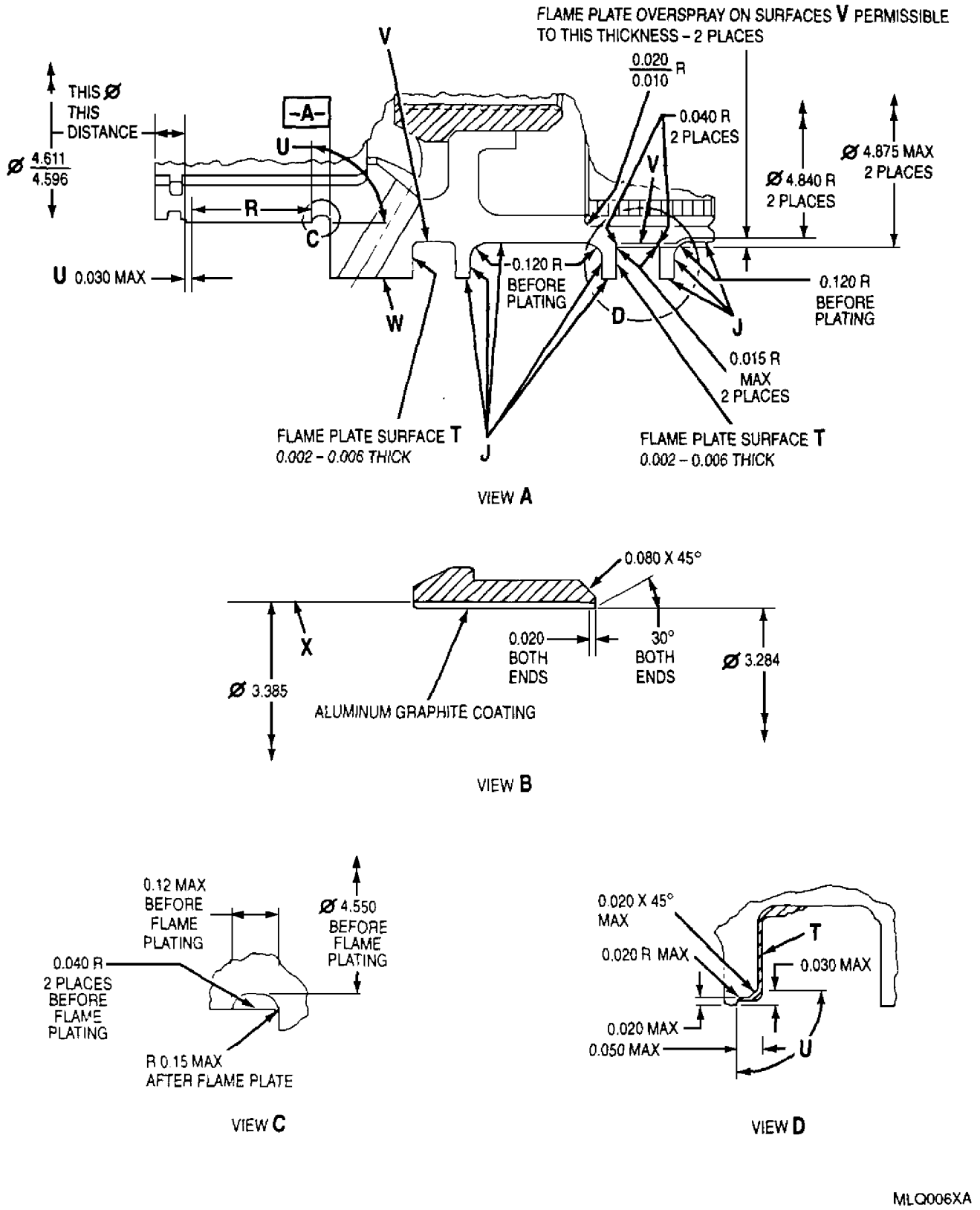

Figure 1. Turbine Front Bearing Cage Repair (Sheet 2)

6. TURBINE FRONT BEARING CAGE ASSEMBLY − HONEYCOMB INSERT REPLACEMENT.

Support Equipment Required

Part No./Type Designation	Nomenclature
23034337	Fixture, turbine front inner honeycomb seal
23034338	Drift, turbine front inner honeycomb seal

Materials Required

Specification No./Part No.	Nomenclature
AMS 5786	Rod, welding
MIL−T−81533	Trichloroethane, 1, 1, 1
23007589	Insert, honeycomb seal
——	Ice, Dry

a. Replace turbine front bearing cage honeycomb seal as follows:

(1) Remove ring from parent part using burr gun to crack tack weld.

(2) Blend tack weld into parent metal after removal of ring.

b. Install honeycomb insert into turbine front bearing cage as follows:

Dry Ice, BB−C−104 **55**

(1) Freeze honeycomb insert with dry ice for a minimum of 5 minutes.

NOTE

Care should betaken for proper alignment of honeycomb seal using 23034338 drift.

Location of honeycomb seal shall be 0.000 − 0.015 in. set back from edge on both sides of seal.

(2) Place honeycomb insert into bearing cage in a vertical position using 23034338 drift. Allow honeycomb insert and turbine front bearing cage to normalize to room temperature.

(3) Tack weld honeycomb insert four places, 90° apart using GTAW Class III method and AMS 5786 welding rod.

c. Grind and inspect honeycomb insert seal in turbine front bearing cage as follows:

(1) FPI turbine front bearing cage per WP 017 00. No indications acceptable.

(2) Place turbine front bearing cage into 23034337 fixture with honeycomb seal up.

NOTE

Seal runout shall not exceed 0.002 in.

(3) Electrostatic grind honeycomb seal ID to 4.344 − 4.348 in.

Trichloroethane MIL−T−81533 **10**

(4) Vapor degrease part using MIL−T−81533 trichloroethane for 5−10 minutes.

DEPOT MAINTENANCE

INSPECTION AND REPAIR

TURBINE FRONT BEARING LABYRINTH SEALS

Reference Material

Magnetic Particle and Fluorescent Penetrant Inspection − Procedures . . . . . WP 017 00

Alphabetical Index

Subject **Page No.**

Introduction 2
Turbine Front Bearing Labyrinth Seals 2
ID Repair 2
Inspection 2
Repair 2

Record of Applicable Technical Directives

None

1. **INTRODUCTION.**

2. This work package (WP) provides the instructions for inspection and repair of the turbine front bearing labyrinth seals in the T56−A−427 turboprop engine.

3. **TURBINE FRONT BEARING LABYRINTH SEALS.**

4. TURBINE FRONT BEARING LABYRINTH SEALS − INSPECTION.

Support Equipment Required

Part No./Type Designation	Nomenclature
6799837	Fixture, checking
6799718	Fixture, checking
6799898	Kit, checking, adapter
23034367	Kit, inspection, adapter

a. Inspect turbine front bearing labyrinth seal. Refer to tables 1 and 2.

b. Refer to WP 017 00 for fluorescent penetrant inspection (FPI) procedures.

5. TURBINE FRONT BEARING LABYRINTH SEALS − REPAIR.

a. Repair turbine front bearing labyrinth seals. Refer to Disposition column, table 1 and 2.

b. Replace turbine front bearing seals not within serviceable limits after repair.

6. TURBINE FRONT BEARING LABYRINTH SEALS − ID REPAIR.

Materials Required

Specification No./Part No.	Nomenclature
Metcolite C	Grit, aluminum oxide (CAGE 39918)
Metcoloy No. 2	Wire, coating alloy
MIL−T−81533	Trichloroethane, 1, 1, 1
MIL−PRF−680, type II	Solvent, dry cleaning
Sprabond	Bonding material (CAGE 39918)
——	Gloves, insulated

a. Repair the ID's (Diameter B and E, figure 4), and (Diameter B, figure 5) of worn seals by metallizing as follows:

(1) Machine the ID of seal to remove all damage. The maximum amount of material removed is not to exceed 0.010 in. on diameter.

Table 1. Turbine Front Bearing Front Labyrinth Seal − Inspection and Repair

Condition	Serviceable Limits	Repairable Limits	Disposition
Wear or scoring on ID.	Max ID of 2.910 in. (Diameter B, figure 4) and 2.9115 in. (Diameter E) after sharp edges and metal buildup are removed.	Exceeds serviceable limits.	Repair the ID per paragraph 6, this WP.
Wear on seal knives. Use−201 and −202 subassemblies of 6799837 checking fixture (figure 1) and −206 subassembly of 6799898 adapter kit (figure 2) to inspect seal knife OD's (figure 3).	Min OD of 3.275 in. (Diameter F, figure 4) providing 70% of the circumference of any seal knife is at least 3.279 in. Max seal knife OD shall not exceed 3.281 in. and all seal knives shall meet the runout requirements shown in figure 4.	No repair permitted beyond stoning of knives.	Stone any burrs or rolled edges on seal knives. Do not break edges on the seal knives.

Trichloroethane MIL−T−81533 **10**

Dry Cleaning Solvent
MIL−PRF−680, Type II **3**

(2) After machining, thoroughly clean part by vapor degreasing with MIL−T−81533 1, 1, 1 trichloroethane or by washing in MIL−PRF−680, Type II dry cleaning solvent. Part must be completely clean from dirt, grit, oil and grease.

(3) Mask areas which are not to be coated.

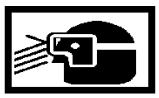

Compressed Air **56**

(4) Grit blast the surface to be coated using Metcolite C coarse aluminum oxide grit, or equivalent, to produce a surface finish comparable to that obtained by using a G18 angular steel grit. Remove dust and grit particles using clean dry compressed air.

WARNING

Heated parts will cause skin damage (burns). Use clean insulated gloves to handle parts.

(5) Preheat the part to 200−300°F (93−149°C).

(6) Use Sprabond, or equivalent, as a bonding agent. Spray the specified areas to a thickness of 0.001 − 0.002 in. using an approved metallizing gun and flowmeter settings. When the spraying starts place a stream of air on the opposite side of part to maintain a maximum temperature of 300°F(149°C) throughout the metallizing operation.

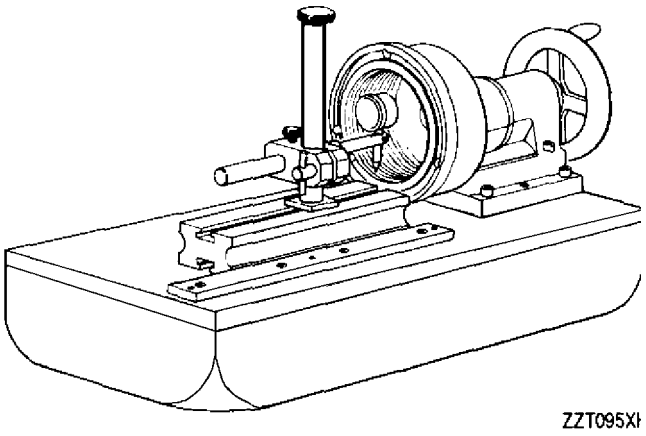

Figure 1. 6799837 Turbine Rotor Seals Checking Fixture

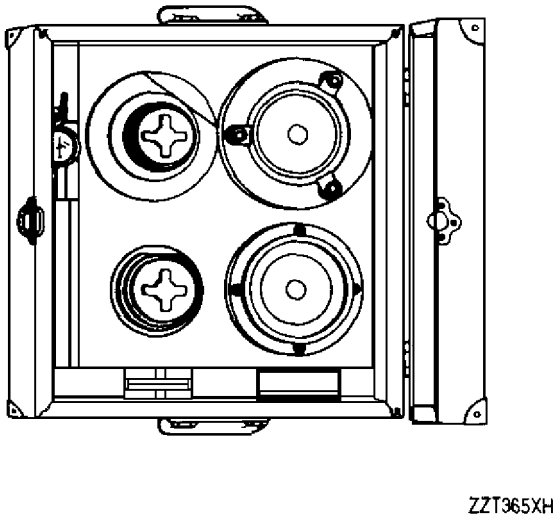

Figure 2. 6799898 Turbine Rotor Seals Checking Adapter Kit

(7) Use Metcoloy No. 2 Wire as the coating alloy. Coat the specified areas to a thickness required for finishing. Avoid overlap in the coating process to prevent excessive runout.

(8) Remove masks carefully to prevent damage to coating.

(9) Machine ID of front labyrinth seal (Diameters B and E) to limits in figure 4. Machine ID of rear labyrinth seal (Diameter B) to limits in figure 5.

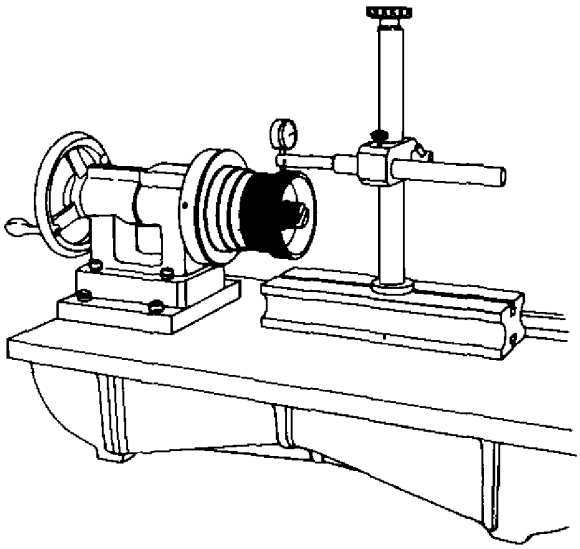

MLF008XG

Figure 3. Checking Turbine Front Bearing Labyrinth Seals

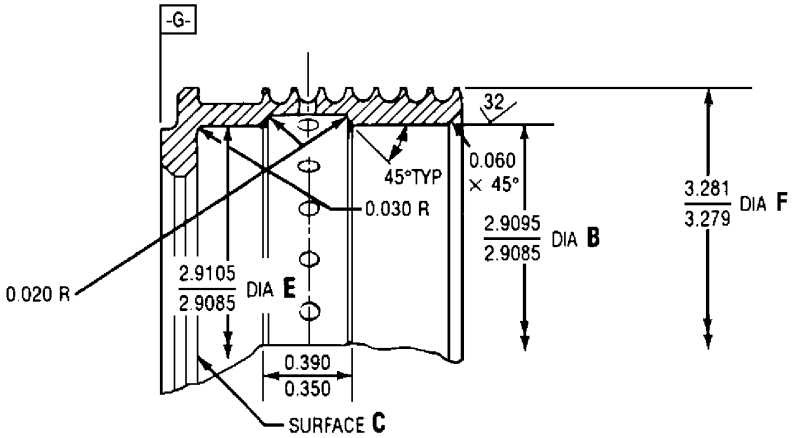

AXIS IS ESTABLISHED BY DIAMETER **B** AND SURFACE **C**.

DIA **E** SHALL BE WITHIN 0.002 IN. FIR OF AXIS.

SURFACES **C** AND **G** SHALL BE SQUARE WITHIN 0.001 IN. FIR OF AXIS.

DIA **F** SHALL BE WITHIN 0.002 IN. FIR OF AXIS OVER 70% OF CIRCUMFERENCE OF ANY KNIFE SEAL.

MLF009XF

Figure 4. Turbine Front Bearing Front Labyrinth Seal

Table 2. Turbine Front Labyrinth Seal − Inspection and Repair

Condition	Serviceable Limits	Repairable Limits	Disposition
Wear or scoring on ID.	Max ID of 4.1415 in. (Diameter B, figure 5) after sharp edges and metal build−up are removed.	Exceeds serviceable limits.	Repair the ID per paragraph 6, this WP.
Wear on seal knives. Use 6799718 checking fixture and 23034367 adapter kit to inspect seal knife OD's.	Min OD of 4.335 in. (Diameter F, figure 5) and 7.301 in. (Diameter G) with no coating discontinuity, provided 70% of the circumference of any seal knife is at least 4.337 in. (Diameter F) and 7.303 in. (Diameter G). Max seal knife OD shall not exceed 4.343 in. (Diameter F) and 7.309 in. (Diameter G). Seal knives shall meet the runout requirements shown in figure 5.	No repair permitted beyond stoning of knives.	Stone any burrs or rolled edges on seal knives. Do not break edges on seal knives.

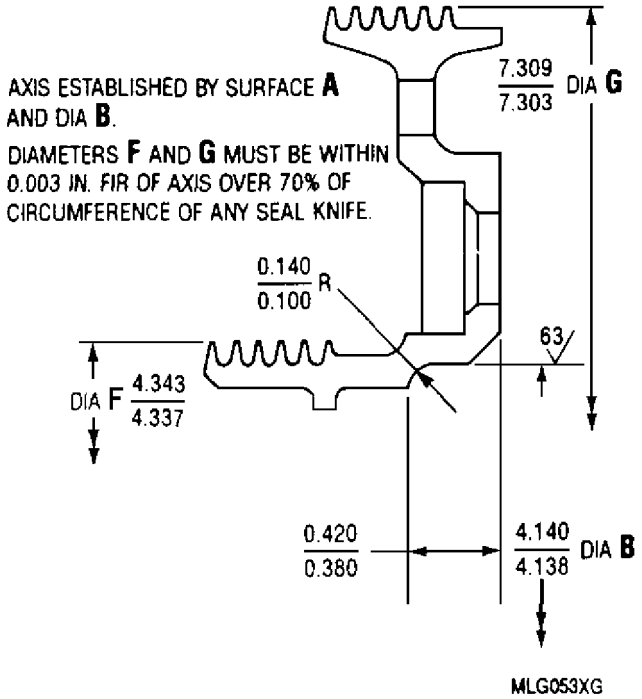

Figure 5. Turbine Front Bearing Rear Labyrinth Seal

DEPOT MAINTENANCE

INSPECTION AND REPAIR

TURBINE VANE ASSEMBLIES

Reference Material

Cleaning and Corrosion Treatment - Procedures . . . . . WP 008 00
Magnetic Particle and Fluorescent Penetrant Inspection - Procedures . . . . . WP 017 00
Plating and Surface Treatment of Parts . . . . . WP 018 00
First-Stage Turbine Inlet Assembly - Inspection and Repair . . . . . WP 093 00

Alphabetical Index

Subject **Page No.**

Introduction 2
Turbine Vane Assemblies 2
Dimensional Check 14
First and Second-Stage Cooling Air Passage Inspection 19
Inspection 2
Repair 2

Record of Applicable Technical Directives

Type/No.	Date	Title and ECP No.	Date Inc.	Remarks
PPC-122	1 Jul 04	First-Stage Turbine Vane Metal Blade Track	1 Sep 05	——

1. **INTRODUCTION.**

2. This work package (WP) provides the instructions for inspection and repair of the turbine vane assemblies used in the turbine in the T56-A-427 turboprop engine.

3. **TURBINE VANE ASSEMBLIES.**

4. TURBINE VANE ASSEMBLIES - INSPECTION.

a. Inspect turbine vane assemblies. Refer to tables 1 and 2.

b. Refer to WP 017 00 for fluorescent penetrant inspection (FPI) procedures.

5. TURBINE VANE ASSEMBLIES - REPAIR.

a. Repair turbine vane assemblies. Refer to Disposition column, table 1.

b. Replace turbine vane assemblies not within serviceable limits after repair.

Table 1. Turbine Vane Assemblies- Inspection and Repair

Condition	Serviceable Limits	Repairable Limits	Disposition
Nicks or dents on vanes.	See figures 1, 3, and 5.	Any amount.	Remove sharp edges by blending. Condemn part exceeding serviceable limits.
NOTE Early stage of sulfidation is evidence by a rough or crusty appearance of the vane airfoil. Advanced stage of this condition is evidenced by splitting, delamination, separating, flaking, or loss of material.			
Corrosion (sulfidation) vane airfoil.	Not serviceable.	Not repairable.	Condemn part exceeding serviceable limits.
Coating:			
Chipped, eroded, worn, or blended First- and Second-Stage vanes.	Vane airfoil and inner and outer bands must have 100% coating determined by heat tint inspection per WP 008 00.	Any coating loss.	Strip and reapply coating per WP 018 00.
Third-Stage vanes.	Vane airfoil and inner and outer bands must have 100% coating determined by heat tint inspection per WP 008 00.	Any coating loss.	For coating loss up to 10% of airfoil surfaces, use touchup procedures for AEP 32 per WP 018 00.
NOTE The application of AEP 32 must be accomplidhed only by a facility licensed and certified by the OEM or specifically approved by the USN T56-A-427 FST.			
Corrosion of the vanes inner or outer band and First-Stage vane saddle.	Not to exceed 50% of material thickness.	Not repairable.	Condemn part exceeding serviceable limits.
Metal deposits on vanes.	Not serviceable.	Any metal deposits.	Blend metal deposits from vanes. Do not damage coating.

Table 1. Turbine Vane Assemblies- Inspection and Repair (contd)

Condition	Serviceable Limits	Repairable Limits	Disposition
Fretting wear:			
Liner mating surface (First-Stage).	Not to exceed 1/2 of original material thickness.	Not repairable.	Condemn part exceeding serviceable limits.
Saddle.	0.040 in. of stock remains.	Not repairable.	Condemn part exceeding serviceable limits.
Wear of outer band ID and inner band OD (erosion, scoring, rubbing, etc.).	0.0313 in. max depth.	Any metal buildup.	Remove metal build-up. Condemn part exceeding serviceable limits.
Erosion, oxidation or wear on First-Stage vane blade track. (1) Ceramic blade tracks (PPC-122 NINC): (2) Metal blade tracks (PPC-122 INC):	(1) See Figure 2. (2) Any amount of blade tip rub. No damage allowed.	(1) None. (2) None.	(1) If applicable, replace vanes IAW PPC-122. (2) If indications of blade tip rub are evident, then inspect First-Stage blade tips IAW WP 108 00. If damage is found, condemn part.
Erosion, oxidation or wear on Second thru Fourth-Stage vane blade track.	See figures 4, 6, and 7.	Exceeds serviceable limits.	Replace blade track material IAW best commercial practices.
Cracks:			
Inner and outer bands, any location. (First-, Second-, Third-, and Fourth-Stage.)	First-stage: figure 1. Second-Stage: figure 3. Third- and Fourth-Stage: figure 5.	Not repairable.	Condemn part exceeding serviceable limits.
Axial displacement of inner tang on all vanes.	Refer to paragraph 6, this WP.	Not repairable.	Condemn part exceeding serviceable limits.
Melting or disintegration.	Not serviceable.	Not repairable.	Condemn part exceeding serviceable limits.

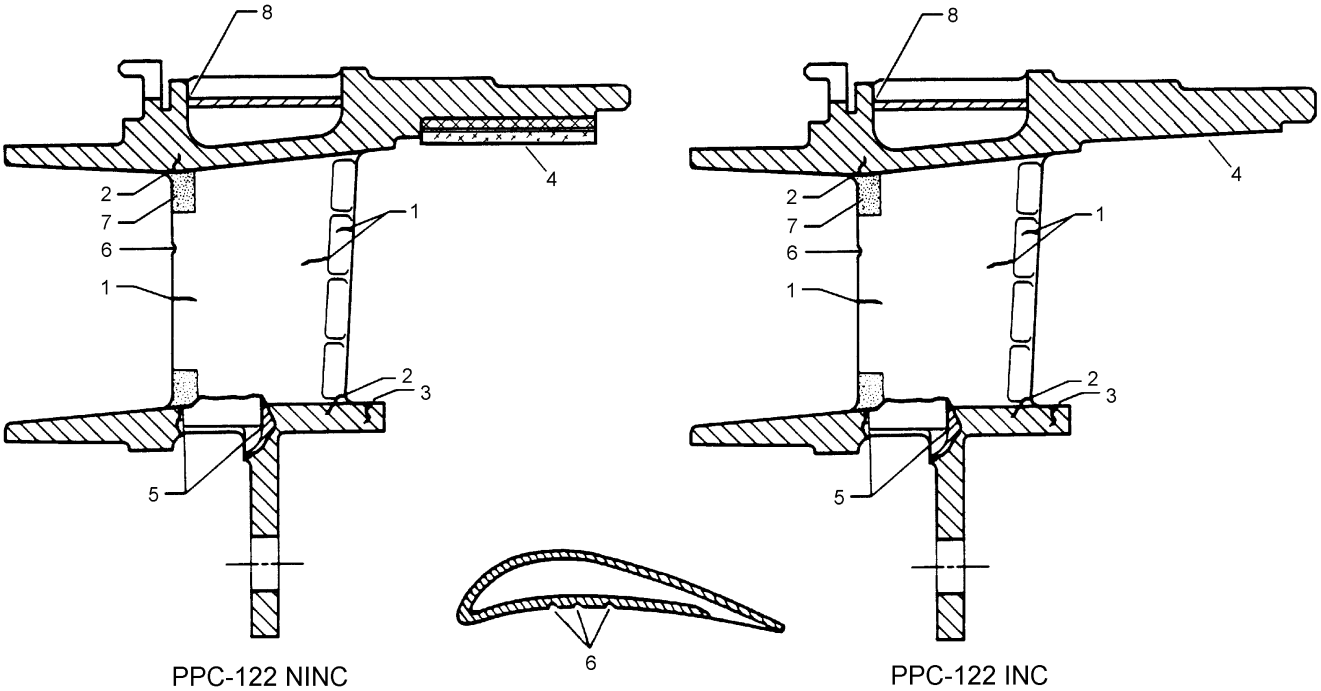

PPC-122 NINC
(CERAMIC BLADE TRACK)

PPC-122 INC
(METAL BLADE TRACK)

Ref No.	Condition/Area	Serviceable Limits
1	Axial Cracks-vane leading or trailing edges.	(1) Cracks that do not exceed a length of 0.125 in. are acceptable in either or both sides of airfoil. Cracks that start at the leading edge may progress rearward across airfoil to a maximum length of 0.125 in. (2) No cracks exceeding 0.250 in. in trailing edge. (3) Cracks must be separated by a distance equal to the length of the longer of two cracks. Direction of progress must not cause metal breakout. (4) Cracks must be of sufficient tightness so that the airfoil internal surface is not visible.

Figure 1. First-Stage Turbine Vane Damage Limits (Sheet 1 of 2)

Ref No.	Condition/Area	Serviceable Limits
2	Fillet Cracks−between vanes at inner or outer band.	(1) No cracks exceeding 0.375 in. in length when measured radially along airfoil. (2) Cracks must be of sufficient tightness so that the airfoil internal surface is not visible.
3	Inner and Outer Band Cracks.	No limit to number. Outer band circumferential cracks permissible up to 0.500 in.
4	Blade Track.	(1) PPC−122 NINC: See figure 2. (2) PPC−122 INC: Any amount of wear permitted. Inspect blade tips for excessive wear.
5	Impingement Tube Weld Joint.	(1) No cracks. (2) No loss of seal between tube and band.
6	Nicks and Dents−vane airfoil.	Any number, 0.031 in. deep. No holes through walls.
7	Erosion. Vane airfoil.	(1) Maximum of 1/3 the total vane height or confined to an area 3/8 in. radially from inner and outer bands and 1/4 in. axially from leading edge. (2) No visible breakthrough into hollow airfoil. Not to exceed 50 percent of material thickness.
8	Welded Cap.	(1) No cracks in cap. (2) No loss of seal between outer band and cap.

Figure 1. First−Stage Turbine Vane Damage Limits (Sheet 2 of 2)

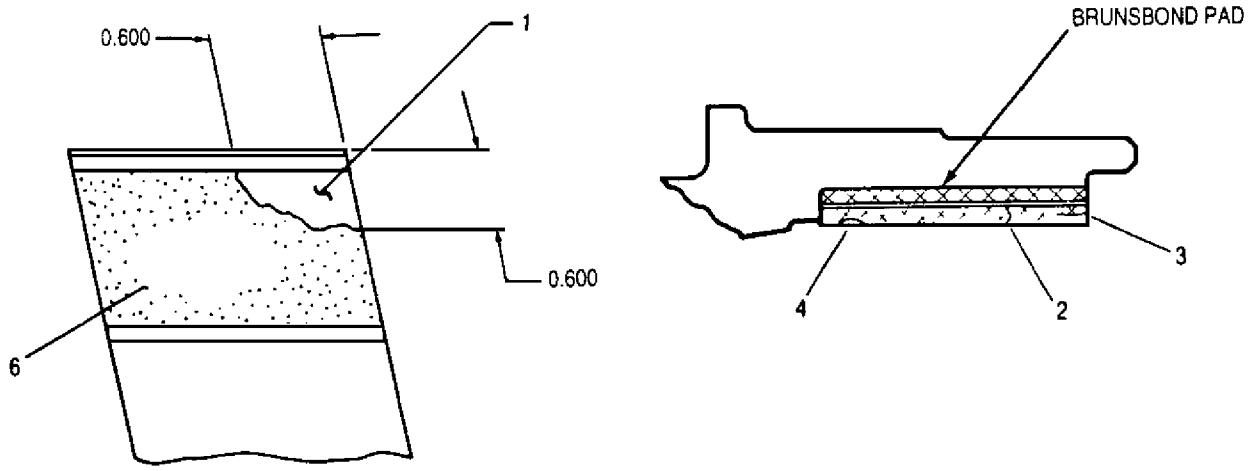

MLG076XE

Ref No.	Condition/Area	Serviceable Limits
1	Edge Chips.	(1) No chip to exceed 0.600 x 0.600 in. area. (2) One chip permitted per edge. (3) No Brunsbond pad visible.
2	Radial Cracks.	(1) Any number permitted.
3	Transverse Cracks.	(1) None permitted.
4	Nicks.	(1) Any number but sufficient thickness so that the Brunsbond pad is not visible.
5	Radial Dimension (measured in turbine inlet assy) (Refer to WP 093 00).	(1) 9.248 − 9.258 in.
6	Center Chip or Erosion.	(1) Area not to exceed 0.400 x 0.400 in. (2) One chip (center or edge) or erosion permitted per blade track. (3) No Brunsbond pad visible.

Figure 2. Turbine First−Stage Vane Blade Track Wear Limits (PPC−122 NINC)

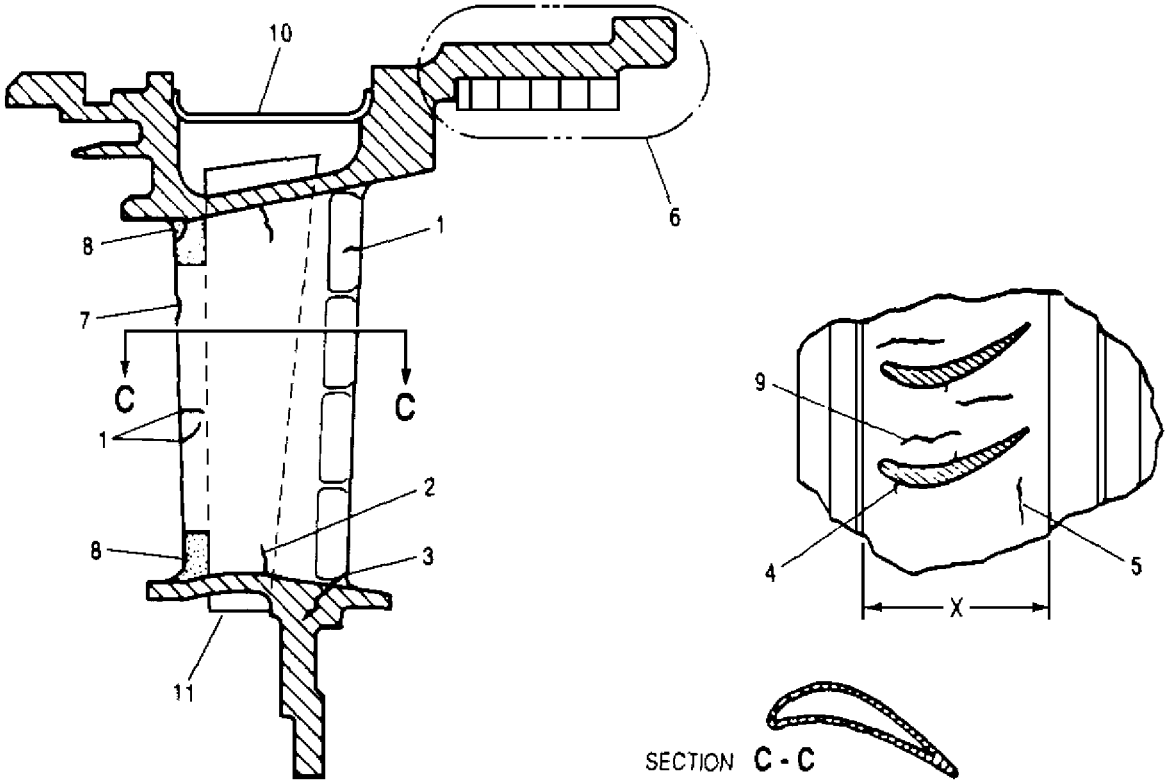

MLE024XD

Ref No.	Condition/Area	Serviceable Limits
1	Axial Cracks−vane leading or trailing edges.	(1) No cracks exceeding 0.125 in. in leading edge. (2) No cracks exceeding 0.375 in. in trailing edge. (3) Cracks must be 0.125 in. apart and progression must not cause metal breakout. (4) Cracks must be of sufficient tightness so that the airfoil internal surface is not visible.
2	Radial Cracks−airfoil.	(1) No cracks exceeding 0.500 in. in length. (2) Cracks must be of sufficient tightness so that the airfoil internal surface is not visible.

Figure 3. Second−Stage Turbine Vane Damage Limits (Sheet 1 of 2)

Ref No.	Condition/Area	Serviceable Limits
3	Fillet Cracks−between vane and inner or outer band.	(1) No cracks exceeding 0.500 in. in length when measured radially along airfoil. (2) Cracks must be of sufficient tightness so that the airfoil internal surface is not visible.
4	Inner and Outer Band Cracks − vane cooling air openings.	No limit to number or length of cracks.
5	Outer Band Circumferential Cracks.	No cracks permissible.
6	Blade Track.	See Figure 4.
7	Nicks and Dents−vane airfoil.	Any number 0.031 in. deep, but cracks must be of sufficient tightness so that the airfoil internal surface is not visible.
8	Erosion. Vane airfoil.	(1) Maximum of 1/3 the total vane height or is confined to an area 0.375 in. radially from inner and outer bands and 0.250 in. axially from leading edge. (2) No visible break through into hollow airfoil. Not to exceed 50 percent of material thickness.
9	Axial cracks in outer band.	Any number permitted in Distance X. Reject part if cracks break over edge.
10	Welded Cap.	(1) No cracks in cap. (2) No loss of seal between outer band and cap.
11	Impingement Tube.	No cracks in braze joint at base of tube. Metal deterioration permitted up to base metal of vane.

Figure 3. Second−Stage Turbine Vane Damage Limits (Sheet 2 of 2)

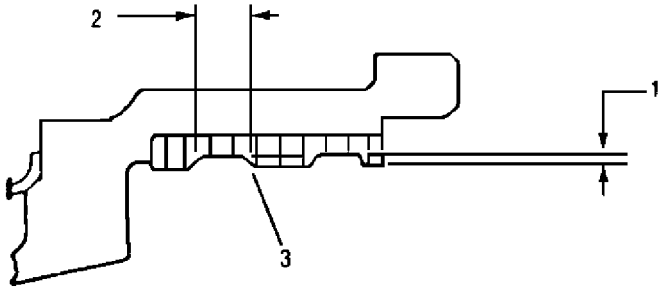

QMG030XE

Ref No.	Condition/Area	Serviceable Limits
1	Groove Depth, two places.	0.036 in. max depth.
2	Groove Depth, two places.	1/4 in. max width.
3	Erosion.	Slight spiking of honeycomb permitted.

Figure 4. Turbine Second−Stage Blade Track Wear Limits

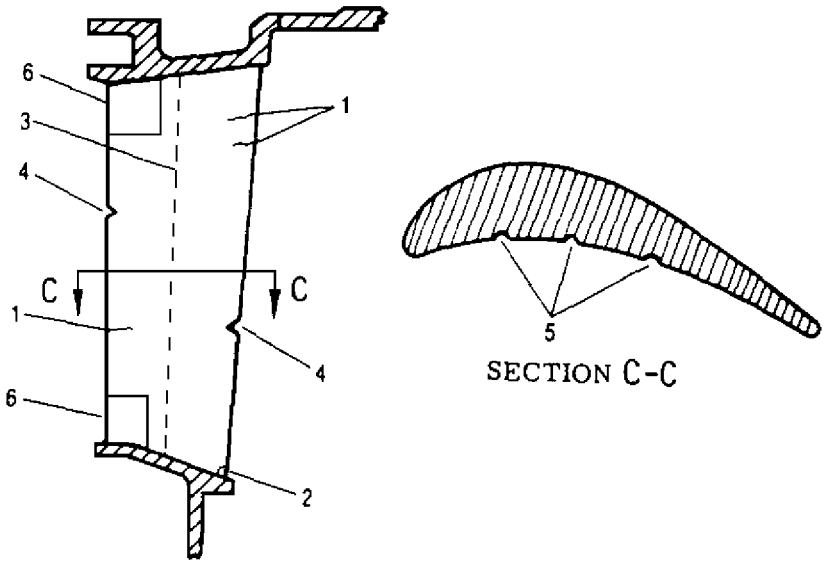

QME023XD

Ref No.	Condition/Area	Serviceable Limits
1	Axial Cracks−vane leading or trailing edges.	(1) Any number of cracks, less than 0.200 in. long, if direction of progress will not cause metal breakout. (2) No crack exceeding 0.250 in. long in leading edge or trailing edge. (3) Cracks over 0.250 in. long must be at least 0.313 in. apart and not in the same plane with such cracks in the opposite edge of the vane.
2	Fillet Cracks−between vane and inner or outer band.	(1) Crack may extend through band and progress up to 0.250 in. long. (2) Adjacent vanes may have fillet cracks but crack must not extend through band.

Figure 5. Third− and Fourth−Stage Turbine Vane Damage Limits (Sheet 1 of 2)

Ref No.	Condition/Area	Serviceable Limits
3	Vane Distortion (Bowing).	Any number, 0.094 in. deep max.
4	Nicks and Dents−vane leading and trailing edges.	Any number, 0.188 in. deep max.
5	Nicks and Dents−vane contour.	Any number, 0.063 in. deep max.
6	Erosion (in area shown). a. Vane airfoil. b. Vane leading edge.	Not in excess of 0.031 in. deep. Not in excess of 0.094 in. in depth and 1/3 the total vane height or confined to an area 0.500 in. radially from inner and outer bands, 0.375 in. axially from leading edge and width of airfoil section. Not in excess of 50% of band thickness.
7	Blade Track	See Figure 6 (Third−Stage). See Figure 7 (Fourth−Stage).

Third− and Fourth−Stage Turbine Vane Damage Limits (Sheet 2 of 2)

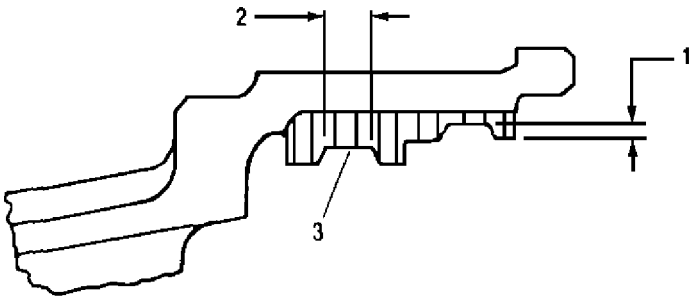

QMG028XE

Ref No.	Condition/Area	Serviceable Limits
1	Groove Depth (2 Places).	0.029 in. max depth.
2	Groove Width.	1/4 in. max width.
3	Erosion.	Slight spiking of honeycomb permitted.

Figure 6. Turbine Third−Stage Blade Track Wear Limits

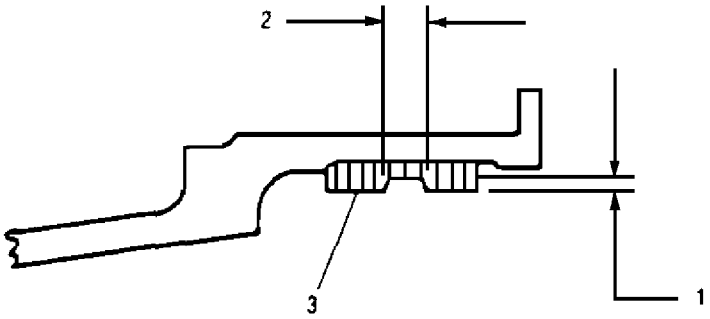

QMG029XE

Ref No.	Condition/Area	Serviceable Limits
1	Groove Depth.	0.035 in. max depth.
2	Groove Width.	1/4 in. max width.
3	Erosion.	Slight spiking of honeycomb permitted.

Figure 7. Turbine Fourth−Stage Blade Track Wear Limits

Table 2. Visual Standards for Vanes (Limits of Acceptance)

Type of Imperfection	Area (figure 8)	Maximum Number	Maximum Size	Minimum Separation
Covered Spits or Flakes	ALL	Unlimited	0.010	3/8
	A (L. E. & T. E.)	2	0.020	3/8
	B	2 per side	0.030	3/8
	C (Single Airfoil)	5	0.030	1/4
	C (Multiple Airfoil)	5 per 1 in. diameter	0.030	1/4
Exposed Spits	A	———	None Allowed	———
	B	———	None Allowed	———
	C	———	None Allowed	———
Pits (individual)	ALL	Unlimited	0.010	3/8
	A	4 per side	0.020	3/8
	B	6 per side	0.020	3/8
	C	Unlimited	0.030	1/4
Pits Clusters (0.005 max diameter pits)	A	———	None Allowed	———
	B (Concave)	———	None Allowed	———
	B (Convex)	2	0.250	1/2
	C	Unlimited	0.250	1/4
Chipping and Spalling	A	———	None Allowed	———
	B	———	None Allowed	———
	C	None allowed except unlimited where machining will remove.		

NOTES:

1. 3X magnification minimum.
2. Dimensions in inches (in.).
3. If determination cannot be made whether a visual imperfection is a pit or an exposed spit, the imperfection shall be evaluated as an exposed spit.
4. Limits for airfoil apply to each airfoil in multiple airfoil vane segments.

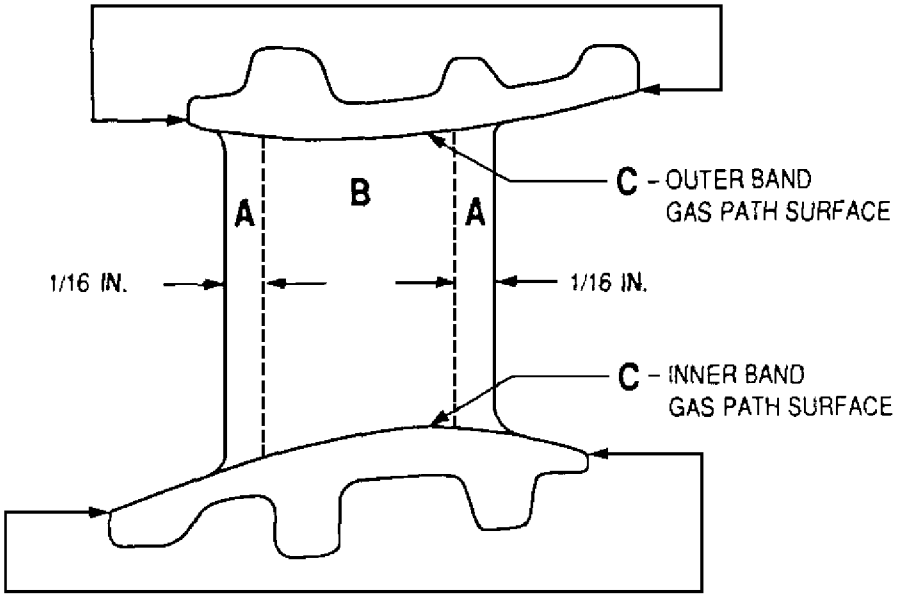

NOTE:
AREAS **A** AND **B** EXTEND THROUGH FILLET RADII TO TANGENCY POINT WITH INNER AND OUTER BANDS.

MLG054XD

Figure 8. Vane Assemblies Visual Standards Areas

6. TURBINE VANE ASSEMBLIES − DIMENSIONAL CHECK.

Support Equipment Required

Part No./Type Designation	Nomenclature
23034292	Fixture, inspection, turbine Second− Stage vane honeycomb
23034293	Fixture, inspection, turbine Third−Stage vane honeycomb
23034294	Fixture, inspection, turbine Fourth− Stage vane honeycomb

a. Inspect turbine vane assemblies as follows:

(1) Position vane assembly in the appropriate inspection fixture (figure 9) and tighten fasteners in an alternating sequence. Repeat the tightening sequence until vane is secured in fixture.

(2) Using the appropriate indicator assembly, check axial dimensions and seal radius dimension against limits shown on the appropriate figures. (Refer to WP 093 00 for first−stage seal radius inspection.)

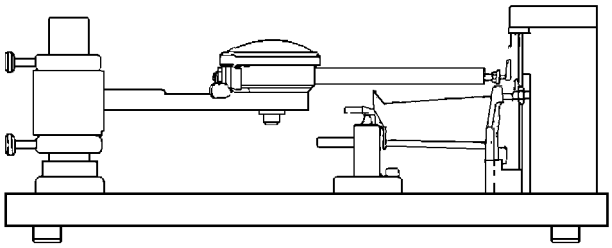

MLE040XJ

Figure 9. Typical Set−Up for Second−, Third−, and Fourth−Stage Vane Seal Checking Fixture

Figure 4 − Second−Stage blade track.
Figure 6 − Third−Stage blade track.
Figure 7 − Fourth−Stage blade track.
Figure 10 − First−Stage vane assembly.
Figure 11 − Second−Stage vane assembly.
Figure 12 − Third−Stage vane assembly.
Figure 13 − Fourth−Stage vane assembly.

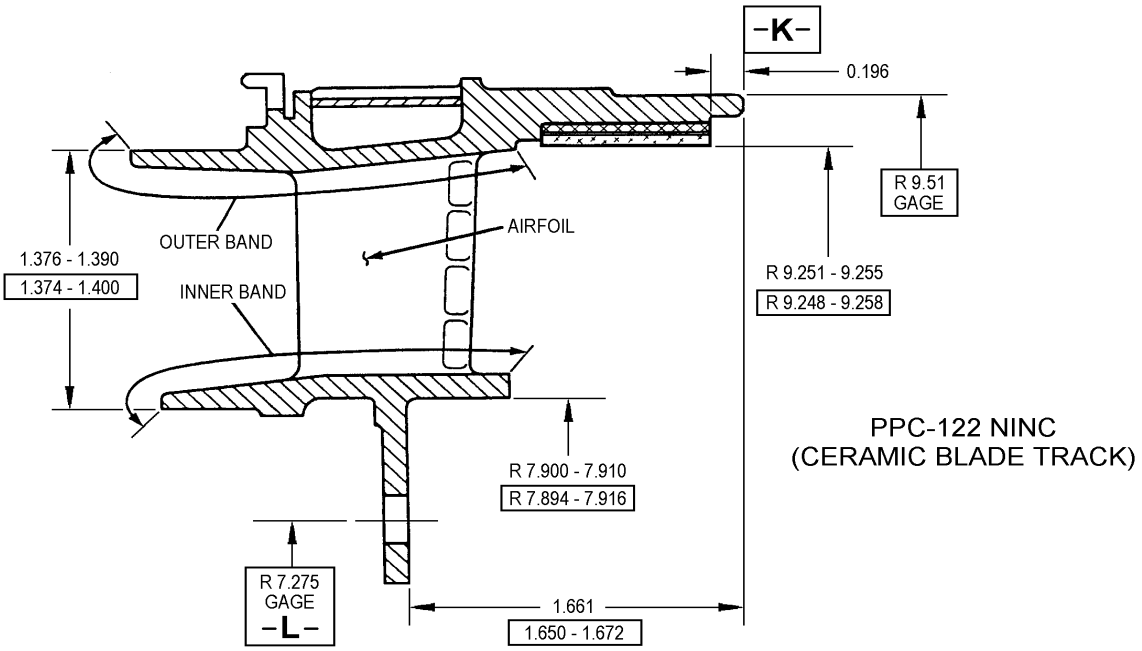

BOXED DIMENSIONS REPRESENT SERVICEABLE LIMITS.

OTHER DIMENSIONS ARE MANUFACTURING TOLERANCES.

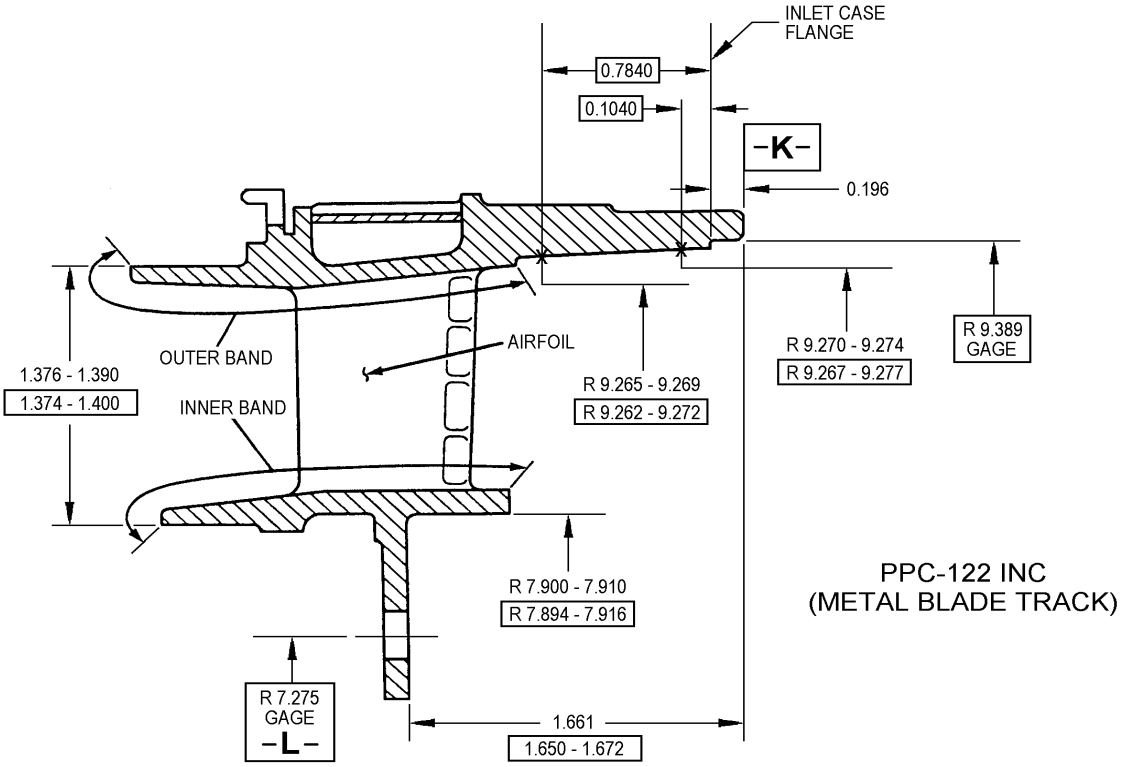

Figure 10. Turbine First−Stage Vane Assembly − Dimensional Checks

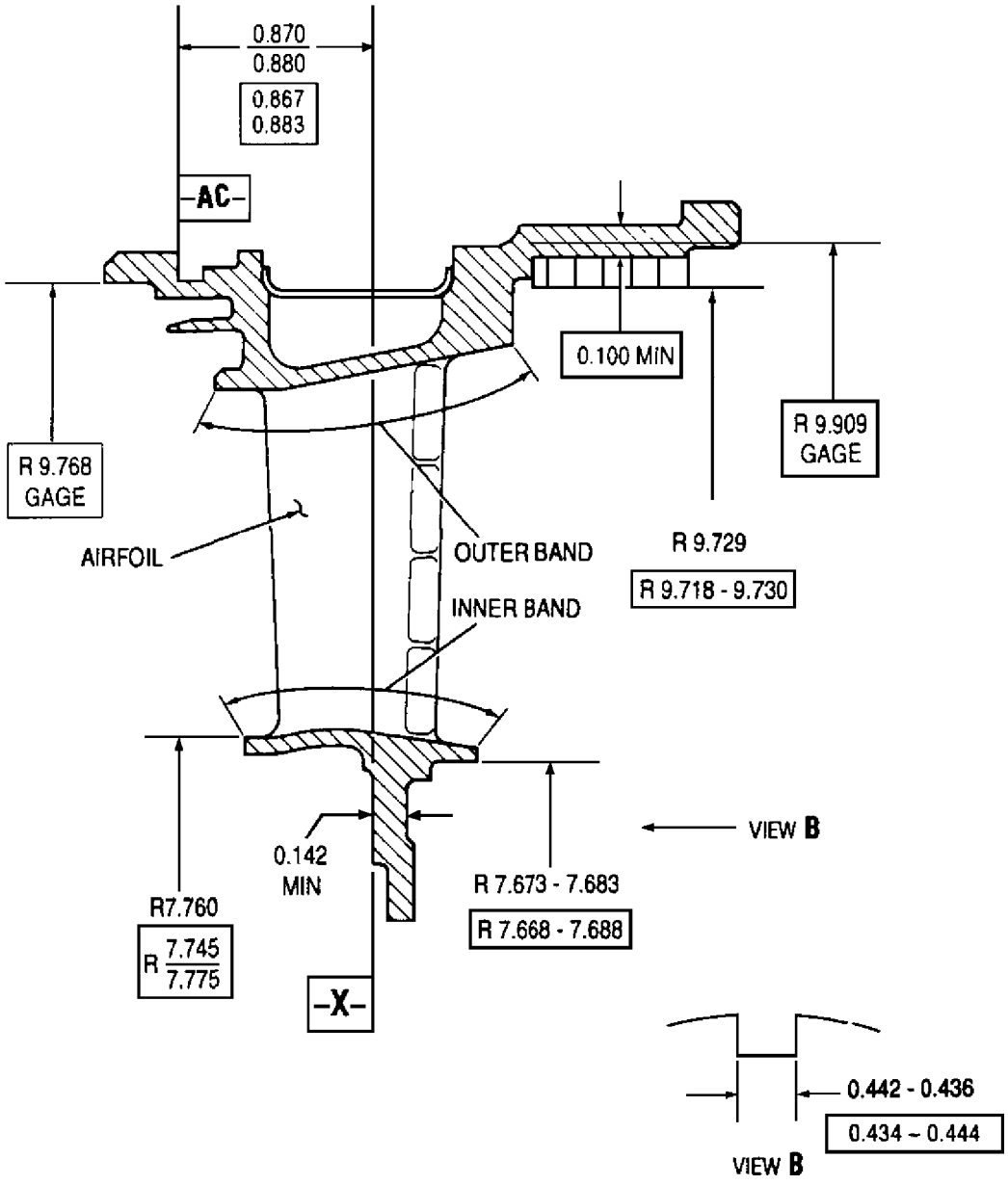

BOXED DIMENSIONS REPRESENT SERVICEABLE LIMITS.
OTHER DIMENSIONS ARE MANUFACTURING TOLERANCES.

MLE023XA

Figure 11. Turbine Second−Stage Vane Assembly − Dimensional Checks

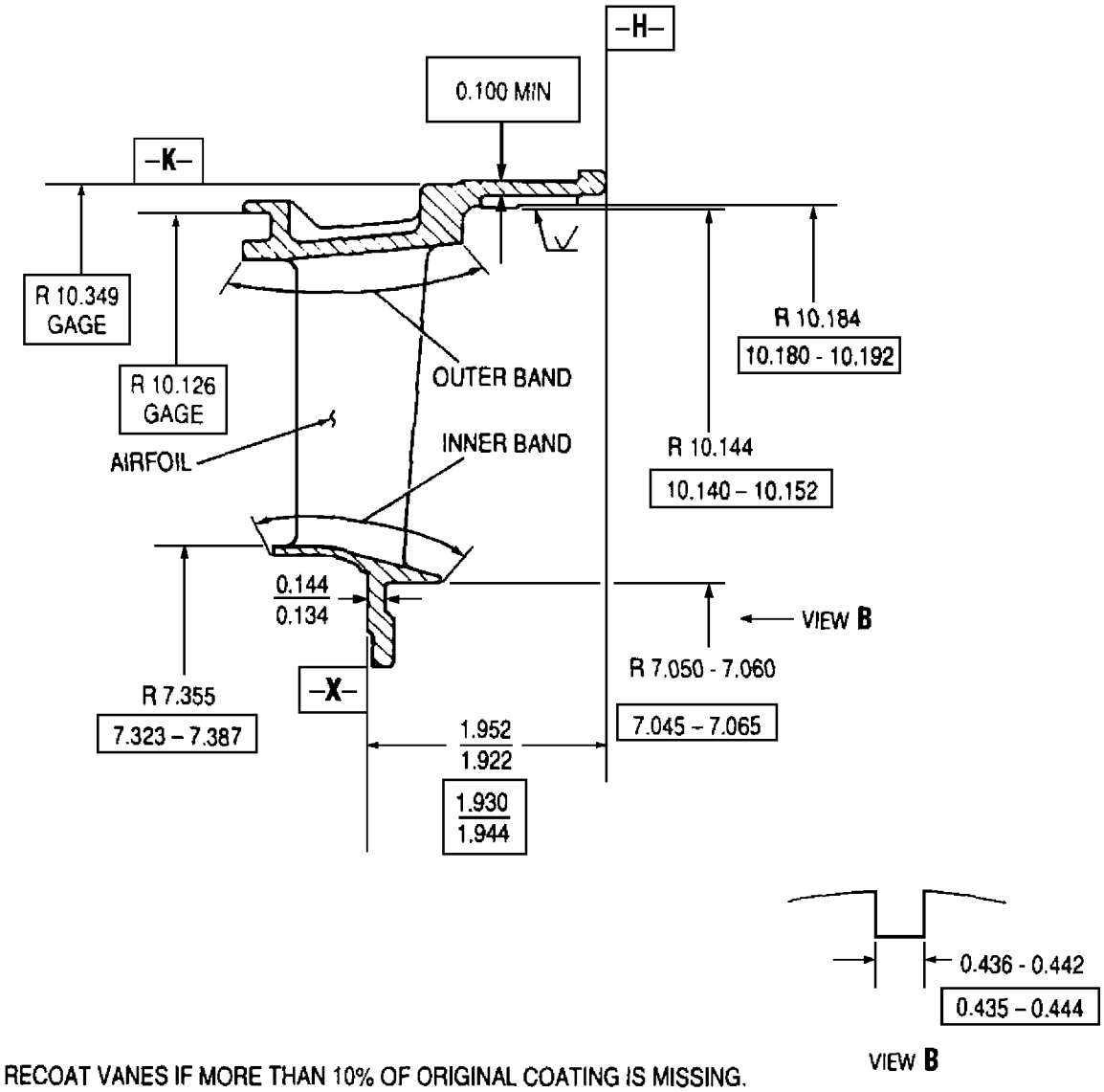

RECOAT VANES IF MORE THAN 10% OF ORIGINAL COATING IS MISSING.

BOXED DIMENSIONS REPRESENT SERVICEABLE LIMITS.
OTHER DIMENSIONS ARE MANUFACTURING TOLERANCES.

MLE027XA

Figure 12. Turbine Third−Stage Vane Assembly − Dimensional Checks

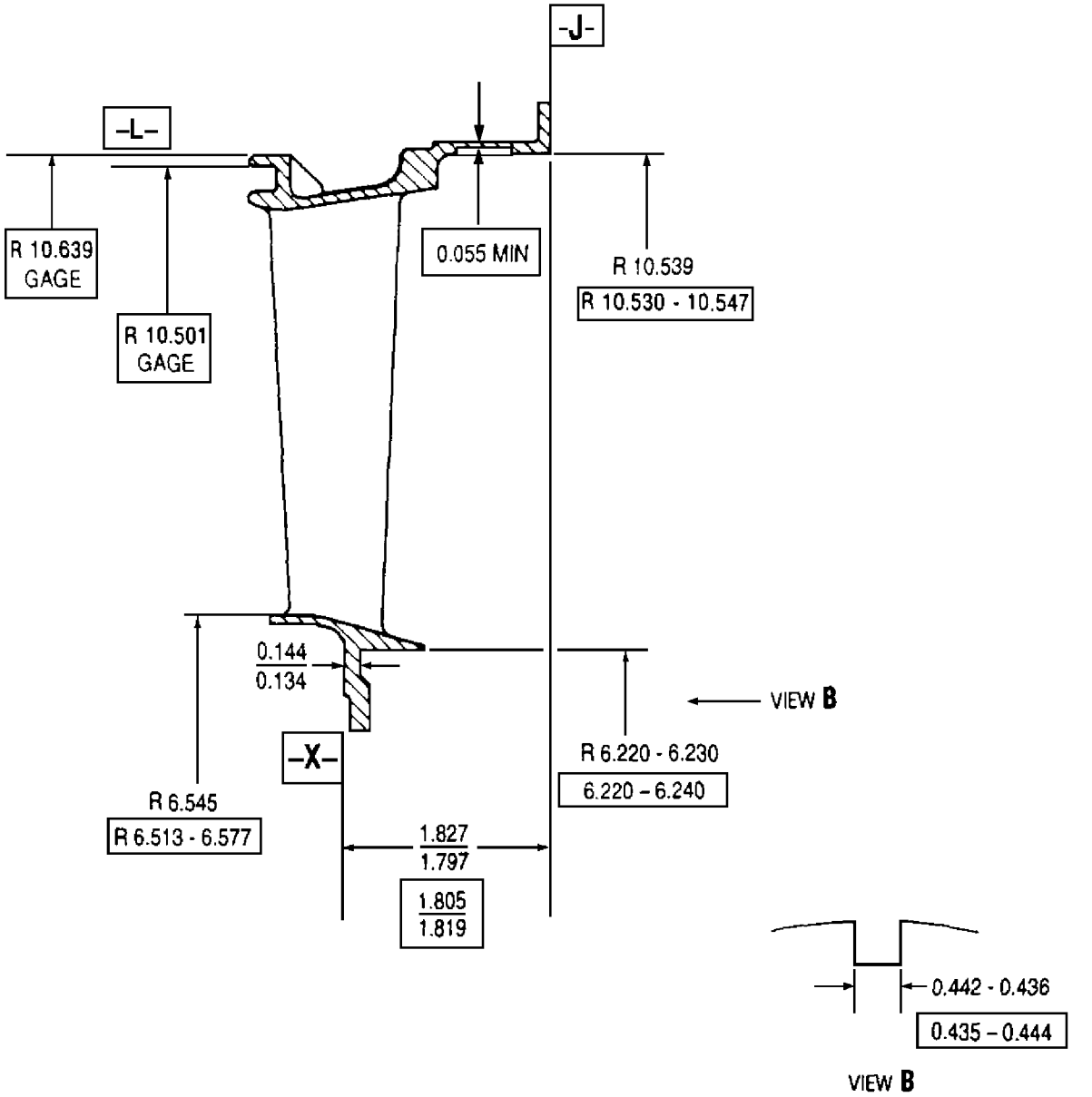

BOXED DIMENSIONS REPRESENT SERVICEABLE LIMITS.
OTHER DIMENSIONS ARE MANUFACTURING TOLERANCES.

MLE026XA

Figure 13. Turbine Fourth−Stage Vane Assembly − Dimensional Checks

7. TURBINE VANE ASSEMBLIES − FIRST− AND SECOND − STAGE COOLING AIR PASSAGE INSPECTION.

Materials Required

Specification No./Part No.	Nomenclature
O−S−598	Sodium hydroxide

a. After cleaning, inspection, and repair, process all First− and Second−Stage vanes as follows:

(1) Ultrasonically clean for 30 minutes in the following solution:

Sodium Hydroxide O−S−598 **60**

(a) 1.6 ounces of sodium hydroxide to 1 gallon water.

(b) 2 ounces of Bendix 251 to 1 gallon of water.

(c) Water to working level.

(d) Temperature 160°F (71°C).

b. Cold air flow test vane cavities as follows:

(1) Rinse with tap water by forcing water through cavities of the vane.

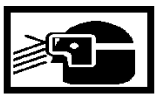

Compressed Air **56**

(2) Use shop air at less than 30 psig to remove loose particles and solution from the cavities.

(3) Repeat steps (1) and (2) until all visible residue has been removed.

(4) Dry vanes with shop air.

c. Check vane airflow as follows: (figure 14)

(1) For the first−stage vanes, suitable fixtures and masking materials shall be used to flow clean air at an inlet temperature of 70°F (21°C) at a pressure 24.7 psia. Exit air at a pressure of 14.7 psia shall have a mass air flow of 0.009−0.0110 lb/sec. Vanes that do not meet minimum mass air flow shall be rejected.

d. For the second−stage vanes proceed as follows:

(1) Block exit R1 (figure 14) and flow air at 24.7 psia inlet (R3) pressure and 70°F (21°C) temperature. Exit air at a pressure of 14.7 psia shall have an air mass flow from R2 of 0.0074−0.0094 lb/sec. Reject vanes that do not meet minimum mass air flow.

(2) Block exits R2 and repeat with an inlet pressure at R3 of 16.2 psia at 70°F (21°C). Exit air, at a pressure of 14.7 psia, shall have an air mass flow of 0.0090−0.0110 lb/sec. Reject vanes that do not meet minimum mass air flow.

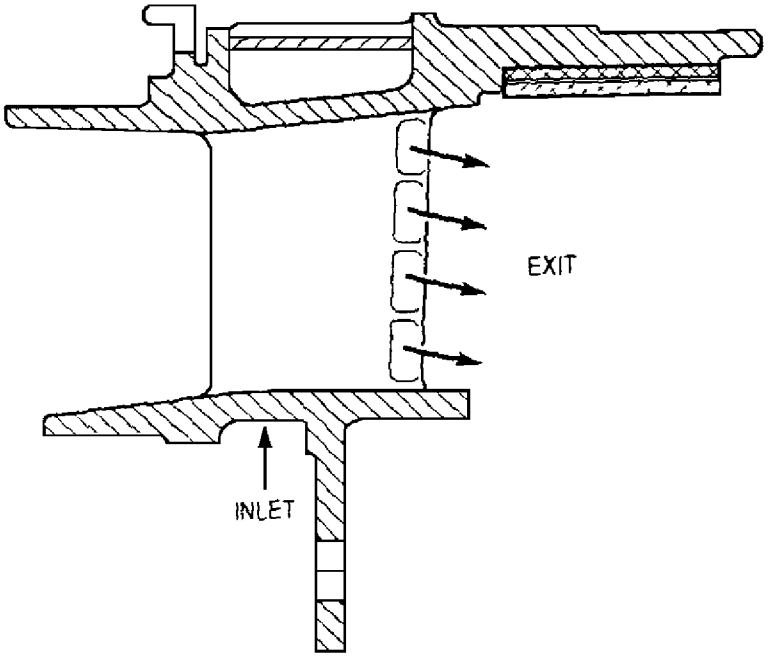

FIRST STAGE

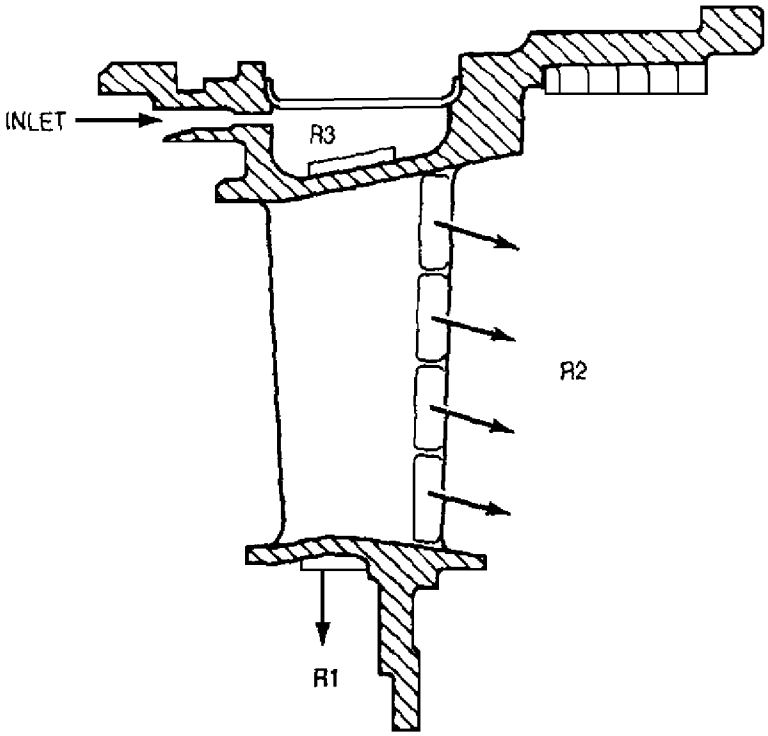

SECOND STAGE

MLE041XA

Figure 14. First−and Second−Stage Airflow Test

DEPOT MAINTENANCE

INSPECTION AND REPAIR

TURBINE GUIDE VANE AND SEAL SUPPORT ASSEMBLIES

Reference Material

Magnetic Particle and Fluorescent Penetrant Inspection − Procedures . . . . . WP 017 00
Plating and Surface Treatment of Parts . . . . . WP 018 00
Plating, Nickel . . . . . AMS 2405
Symbols for Welding, Brazing, and Non−Destructive Testing . . . . . ANSI/AWS A2.4

Alphabetical Index

Subject **Page No.**

Introduction 2
Turbine First−Stage Vane Support Assembly 3
Honeycomb Seal Replacement 4
Honeycomb Installation 5
Honeycomb Removal 4
Piston Ring Installation 4
Piston Ring Removal 3
Turbine Guide Vane and Seal Support Assembly 2
Inspection 2
Repair 2
Turbine Second−Stage Vane Seal Support 6
Honeycomb Seal Replacement 6
Plating 6
Turbine Second to Third−Stage and Third to Fourth−Stage Interstage Seal Support 6
Honeycomb Seal Replacement 6
Honeycomb Electro Static Grinding 7
Honeycomb Installation 7
Honeycomb Removal 6

Record of Applicable Technical Directives

None

1. **INTRODUCTION.**

2. This work package provides the instructions for inspection and repair of the turbine guide vane and seal support assemblies used on the T56−A−427 turboprop engine.

3. **TURBINE GUIDE VANE AND SEAL SUPPORT ASSEMBLY.**

4. TURBINE GUIDE VANE AND SEAL SUPPORT ASSEMBLY − INSPECTION.

a. Inspect turbine guide vane and seal support assembly. Refer to table 1 or 2.

b. Refer to WP 017 00 for Fluorescent Penetrant Inspection (FP1) procedures.

5. TURBINE GUIDE VANE AND SEAL SUPPORT ASSEMBLY − REPAIR.

a. Repair turbine guide vane and seal support assembly. Refer to Disposition column, table 1 or 2.

b. Replace turbine guide vane and seal support assembly not within serviceable limits after repair.

Table 1. Turbine First−Stage Vane Support Assembly − Inspection and Repair

Condition	Serviceable Limits	Repairable Limits	Disposition
Wear on Diameter C (figure 1).	5.317 in. max dia, with a 32 RMS finish.	Exceeds serviceable limits.	Repair Diameter C by replacing piston ring insert as indicated in paragraph 7 and 8, this WP.
Wear on Diameter S (figure 1).	7.3195 in. max dia.	Exceeds serviceable limits.	Repair by replacing honeycomb seal insert as indicated in paragraph 9, this WP.

Table 2. Turbine Second to Third and Third to Fourth Interstage Seal Support − Inspection and Repair

Condition	Serviceable Limits	Repairable Limits	Disposition
Wear on Diameter S (figure 2).	6.924 in. max dia.	Exceeds serviceable limits.	Replace honeycomb seal per paragraph 16, this WP.

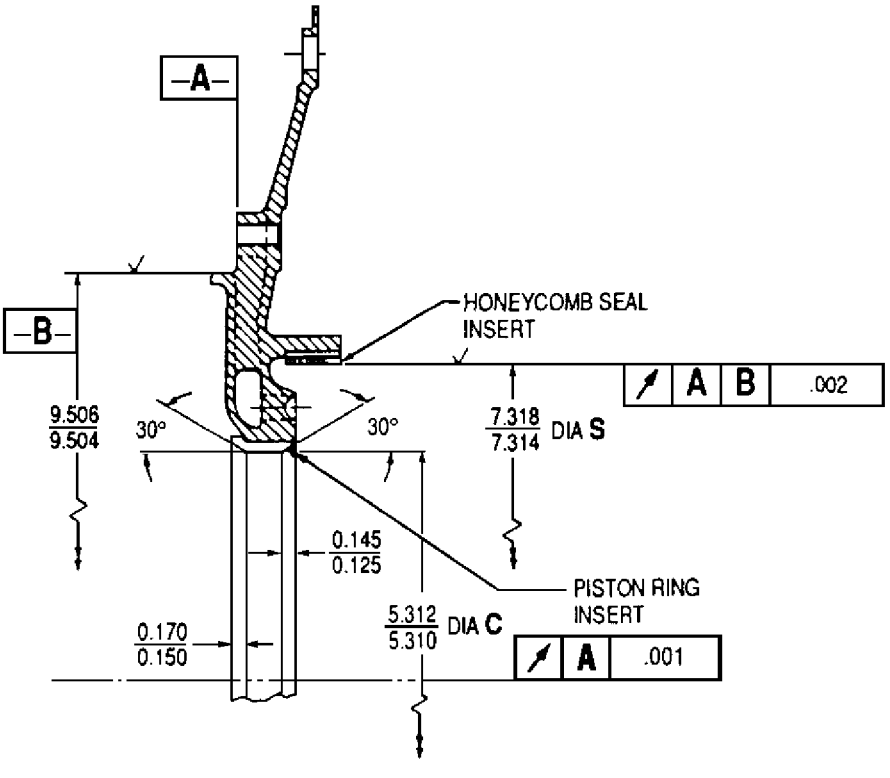

Figure 1. Turbine First−Stage Vane Support Assembly Repair

6. **TURBINE FIRST STAGE VANE SUPPORT ASSEMBLY.**

7. TURBINE FIRST STAGE VANE SUPPORT ASSEMBLY − PISTON RING REMOVAL.

Materials Required

Specification No./Part No.	Nomenclature
MIL−T−81533	Trichloroethane, 1,1,1
——	Ice, dry
——	Gloves, insulated

CAUTION

Do not grind into vane support while removing insert.

a. Grind away weld from piston ring insert (figure 1).

Dry Ice, BB−C−104 **55**

b. Chill insert with dry ice for 10 − 15 minutes.

CAUTION

Do not mar or damage support surfaces during insert removal.

c. Remove insert.

Trichloroethane MIL−T−81533 **10**

d. Vapor degrease support mating surface using MIL−T−81533 1, 1, 1 trichloroethane.

8. TURBINE FIRST STAGE VANE SUPPORT ASSEMBLY − PISTON RING INSTALLATION.

Materials Required

Specification No./Part No.	Nomenclature
AMS 5832	Wire, welding
——	Ice, dry

Dry Ice, BB−C−104 **55**

a. Chill new insert 10 − 15 minutes with dry ice.

NOTE

Make sure insert is properly seated in support.

b. Install new insert immediately upon removal from dry ice.

c. Spot weld insert to support four equally spaced places using AMS 5832 welding wire and GTAW, class III method.

d. Machine piston ring insert as necessary to meet 5.312 − 5.310 in. diameter (figure 1).

9. TURBINE FIRST STAGE VANE SUPPORT ASSEMBLY − HONEYCOMB SEAL REPLACEMENT.

10. Honeycomb Removal.

Support Equipment Required

Part No./Type Designation	Nomenclature
23034335	Fixture, machining, inspection front outer seal

Materials Required

Specification No./Part No.	Nomenclature
MIL−T−81533	Trichioroethane, 1,1,1
Turco 4008	Compound, cleaning
Turco 4181	Compound, cleaning
Turco 4338	Compound, cleaning
——	Ice, dry
——	Gloves, low−lint

a. Install vane support into 23034335 machining fixture.

b. Crack tack welds on ring with burr gun.

Dry Ice, BB−C−104 **55**

c. Pack ring with dry ice for 10 − 15 min.

d. Remove ring from vane support.

e. Blend tack welds to support.

f. Remove vane support from 23034335 fixture.

g. Clean support as follows:

Trichloroethane MIL−T−81533 **10**

(1) Vapor degrease using MIL−T−81533 1,1,1 trichloroethane for a minimum of 5 − 10 min.

(2) Clean with Turco 4008 compound for 30 − 40 min.

(3) Hot water rinse with agitation.

(4) Hot water pressure rinse.

(5) Clean with Turco 4338 for 30 − 40 min.

(6) Hot water rinse with agitation.

(7) Hot water pressure rinse.

(8) Clean with Turco 4181 for 15 − 30 min.

(9) Cold water rinse.

(10) Hot water pressure rinse.

h. FPI vane support per WP 017 00, method C.

i. Scrap support if any linear indications are found.

CAUTION

Low−lint gloves must be used to handle cleaned parts.

NOTE

Avoid excessive water washing.

j. Water wash penetrant oil from support using a coarse warm water spray.

k. Inspect support under a black light to ensure excess oil has been removed.

Compressed Air **56**

l. Allow support to drain or dry with low pressure filtered air (30 psig or less).

Trichloroethane MIL−T−81533 **10**

m. Vapor degrease support for 5 − 10 min. using MIL−T−81533 1, 1, 1 trichloroethane.

11. Honeycomb Installation.

Support Equipment Required

Part No./Type Designation	Nomenclature
23034336	Drift − Installation, front outer seal insert
23034335	Fixture, machining and inspection

Materials Required

Specification No./Part No.	Nomenclature
AMS 5832	Rod, welding
MIL−T−81533	Trichioroethane, 1,1,1
23007588	Insert, front outer honeycomb seal
——	Ice, dry
——	Gloves, low−lint
——	Stock, 0.001 in.

a. Preheat oven to 200°F (93°C).

b. Place vane support into preheated oven for 1 hour.

Dry Ice, BB−C−104 **55**

c. Freeze honeycomb seal assembly with dry ice for 10 minutes minimum.

WARNING

Heated parts will cause skin damage (burns). Use clean insulated gloves to handle parts.

d. Remove vane support from oven and place on work table.

e. Using 23034336 drift, press frozen honeycomb seal into vane support.

f. Check seal with 0.001 in. stock for proper contact with vane support face.

g. Allow parts to normalize to room temperature.

h. Tack weld honeycomb seal four places, 90° apart with AMS 5832 welding rod, GTAW class III method.

i. Place vane support in 23034335 fixture.

j. Locate on Surface A and align three slots with position marked “O” on fixture (figure 1).

k. Indicate large OD within 0.002 in. FIR.

l. Tighten spider clamps.

m. Tighten OD slide clamps.

n. Remove spider clamp.

NOTE

Use master gage for ID measurements.

o. Electro Static grind honeycomb ID to 7.314 − 7.318 in. (figure 1).

p. Remove vane support from 23034335 fixture.

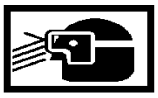

Trichloroethane MIL−T−81533 10

q. Vapor degrease vane support using MIL−T−81533 1, 1, 1 trichloroethane.

12. **TURBINE SECOND−STAGE VANE SEAL SUPPORT.**

13. TURBINE SECOND STAGE VANE SEAL SUPPORT − HONEYCOMB SEAL REPLACEMENT.

a. When seal ID exceeds 13.332 in., repair IAW best commercial practices.

14. TURBINE SECOND STAGE VANE SEAL SUPPORT − PLATING.

a. Deburr honeycomb as necessary.

Do not allow plating to contact honeycomb.

b. Mask honeycomb seal area in preparation for plating.

c. Plate all surfaces except honeycomb per AMS 2405 to a thickness of 0.0009 − 0.0012 in.

d. Stone corners of slots to remove excess plating.

e. Remove masking from honeycomb seal.

f. Size each slot to a width of 0.443 − 0.445 in.

15. **TURBINE SECOND TO THIRD−STAGE AND THIRD TO FOURTH − STAGE INTERSTAGE SEAL SUPPORT.**

16. TURBINE SECOND TO THIRD−STAGE AND THIRD TO FOURTH−STAGE INTERSTAGE SEAL SUPPORT − HONEYCOMB SEAL REPLACEMENT.

a. When seal ID exceeds 6.924 in. replace as follows:

17. Honeycomb Removal.

Support Equipment Required

Part No./Type Designation	Nomenclature
23034285	Drift, interstage seal

Materials Required

Specification No./Part No.	Nomenclature
——	Ice, dry

a. Install seal support in the proper machining fixture.

b. Crack tack welds from ring with a burr gun.

Dry Ice, BB−C−104 55

c. Freeze ring with dry ice to facilitate removal.

d. Remove ring using 23034285 drift from interstage seal.

e. Blend tack welds to parent metal.

f. Clean and inspect interstage seal support per paragraph 10, this WP.

18. Honeycomb Installation.

Support Equipment Required

Part No./Type Designation	Nomenclature
23034285	Drift, interstage seal

Materials Required

Specification No./Part No.	Nomenclature
AMS 5786	Wire, welding
23031113	Insert, interstage
——	Gloves, insulated

a. Place interstage seal support in preheated oven at 200°F (93°C) for one hour.

Dry Ice, BB−C−104 **55**

b. Freeze honeycomb insert using dry ice for 10 minutes minimum.

WARNING

Heated parts will cause skin damage (burns). Use clean insulated gloves to handle parts.

c. Remove interstage seal support from oven and place on detail −1 of interstage seal drift, concave side up (figure 2).

d. Align honeycomb seal on ID of interstage seal support.

e. Using detail−2 of interstage seal drift, press honeycomb seal into interstage seal support until full contact is made on shoulder of seal (figure 2).

f. Tack weld honeycomb insert, four places, 90° apart using AMS 5786 welding wire, GTAW class IV method (figure 2).

19. Honeycomb Electrostatic Grinding.

Support Equipment Required

Part No./Type Designation	Nomenclature
23034287	Fixture, machining second− to third−stage interstage seal support
23034288	Fixture, machining third− to fourth−stage interstage seal support
23034289	Gage and master inspection, interstage seal

Materials Required

Specification No./Part No.	Nomenclature
MIL−T−81533	Trichloroethane, 1,1,1

a. Locate machining fixture on surface A of interstage seal support and align three slots with position marked by “O” on fixture.

b. Lightly tighten using spider clamps.

c. Indicate large OD within 0.0005 in. FIR.

d. Tighten spider clamps.

e. Tighten OD slide clamps.

f. Remove spider clamps.

g. Electro static grind honeycomb seal Diameter S to 6.919 − 6.923 in.

h. Runout shall not exceed 0.002 FIR with respect to Surface A.

i. Remove seal support from machining fixture.

Trichloroethane MIL−T−81533 **10**

j. Vapor degrease interstage seal support using MIL−T−81533 1,1,1 trichloroethane.

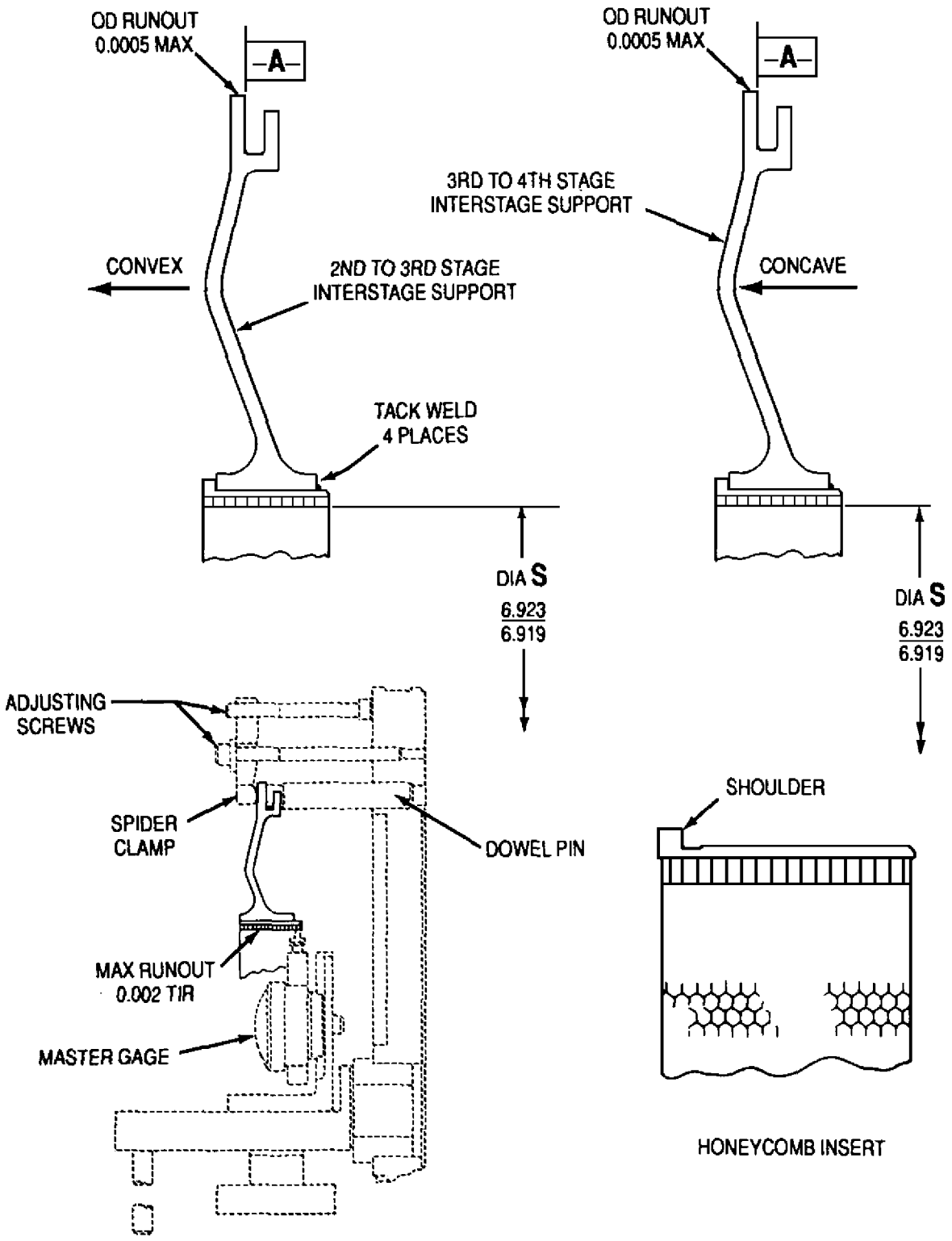

Figure 2. Interstage Support Honeycomb Insert Replacement

QMG034XA

DEPOT MAINTENANCE

INSPECTION AND REPAIR

TURBINE VANE CASE ASSEMBLY

Reference Material

Magnetic Particle and Fluorescent Penetrant Inspection − Procedures . . . . . WP 017 00
Maintenance . . . . . NAVAIR 02B−5DG−6−1
Turbine Unit Parts − Clean, Inspect, and Repair . . . . . WP 054 00

Alphabetical Index

Subject **Page No.**

Introduction 2
Turbine Vane Case Assembly 2
Crack Removal and General Welding Procedures 3
Crack Removal and Preparation for Welding 3
General Crack Welding Procedures 3
Front and Rear Flange Piloting Key Slot Crack Repair 3
Front and Rear Flange Piloting Key Slot Wear Repair 3
Inspection 2
Repair 2
Thermocouple Stud Replacement 3
Vane Assembly Pilot Lips Crack Repair 3
Vane Key Slot Wear Repair 3
Wall Crack Repair 3

Record of Applicable Technical Directives

None

1. **INTRODUCTION.**

2. This work package (WP) provides the instructions for inspection and repair of the turbine vane case assembly used on the T56−A−427 turboprop engine.

3. **TURBINE VANE CASE ASSEMBLY.**

4. TURBINE VANE CASE ASSEMBLY − INSPECTION.

a. Inspect turbine vane case assembly. Refer to table 1.

b. Refer to WP 017 00 for fluorescent penetrant inspection (FPI) procedures.

5. TURBINE VANE CASE ASSEMBLY − REPAIR.

a. Repair turbine vane case assembly. Refer to Disposition column, table 1.

b. Replace turbine vane case assembly not within serviceable limits after repair.

Table 1. Turbine Vane Case Assembly − Inspection and Repair

Condition	Serviceable Limits	Repairable Limits	Disposition
Cracks:			
Corners of flange key slots.	0.375 in. max.	Exceeds serviceable limits.	Weld repair cracks per paragraph 6, this WP.
Turbine vane assembly pilot lips.	No intersecting cracks. No more than six cracks allowed with a minimum of 1.00 in. apart. Any number of cracks allowed providing a minimum of 2.00 in. apart. Cracks must be minimum of 1.00 in. from locating key slots. No OD break through. Cracks shall not exceed 0.300 in. in axial length.	Exceeds serviceable limits.	Weld repair cracks per paragraph 9, this WP.
Flange bolt hole.	Radially outward from bolt hole to flange OD. Cracks radially inward from bolt hole not serviceable.	Exceeds serviceable limits.	Weld repair cracks per paragraph 6, this WP.
Case Wall.	Not serviceable.	Exceeds serviceable limits.	Weld repair cracks per paragraph 11, this WP.
Piloting key slot.	0.125 in. and not extending into parent metal.	Exceeds serviceable limits.	Repair per paragraph 13, this WP.
Case nicks or dents.	Not serviceable.	0.031 in. max depth.	Blend all sharp edges.
Vane key slot wear (pilot lips).	0.503 in. max width (7 slots) 0.530 in. max width (14 slots)	Exceeds serviceable limits.	Repair per paragraph 10, this WP.
Damaged or loose Fourth−Stage vane locating pins.	Not serviceable.	Not repairable.	Replace pins per figure 3.
Front and rear flange piloting key slot wear.	0.501 in. max width.	Exceeds serviceable limits.	Repair per paragraph 12, this WP.

Table 1. Turbine Vane Case Assembly − Inspection and Repair (contd)

Condition	Serviceable Limits	Repairable Limits	Disposition
Thermocouple studs:			
Loose or damaged (except threads).	Not serviceable.	Any amount.	Replace studs. Refer to paragraph 14, this WP.
Damaged threads.	Not serviceable.	Minor nicks and burrs.	Clean up nicks and burrs using a fine India stone or smooth file. Replace studs exceeding repairable limits. Refer to paragraph 14, this WP.

6. TURBINE VANE CASE ASSEMBLY − CRACK REMOVAL AND GENERAL WELDING PROCEDURES.

7. Crack Removal and Preparation for Welding.

a. To be determined.

8. General Crack Welding Procedures.

a. To be determined.

9. TURBINE VANE CASE ASSEMBLY − VANE ASSEMBLY PILOT LIPS CRACK REPAIR.

a. To be determined.

10. TURBINE VANE CASE ASSEMBLY − VANE KEY SLOT WEAR REPAIR.

a. To be determined.

11. TURBINE VANE CASE ASSEMBLY − WALL CRACK REPAIR.

a. To be determined.

12. TURBINE VANE CASE ASSEMBLY − FRONT AND REAR FLANGE PILOTING KEY SLOT WEAR REPAIR.

a. To be determined.

13. TURBINE VANE CASING − FRONT AND REAR FLANGE PILOTING KEY SLOT CRACK REPAIR.

a. To be determined.

14. TURBINE VANE CASE ASSEMBLY − THERMOCOUPLE STUD REPLACEMENT.

a. Replace damaged thermocouple studs. Refer to NAVAIR 02B−5DG−6−1, WP 054 00.

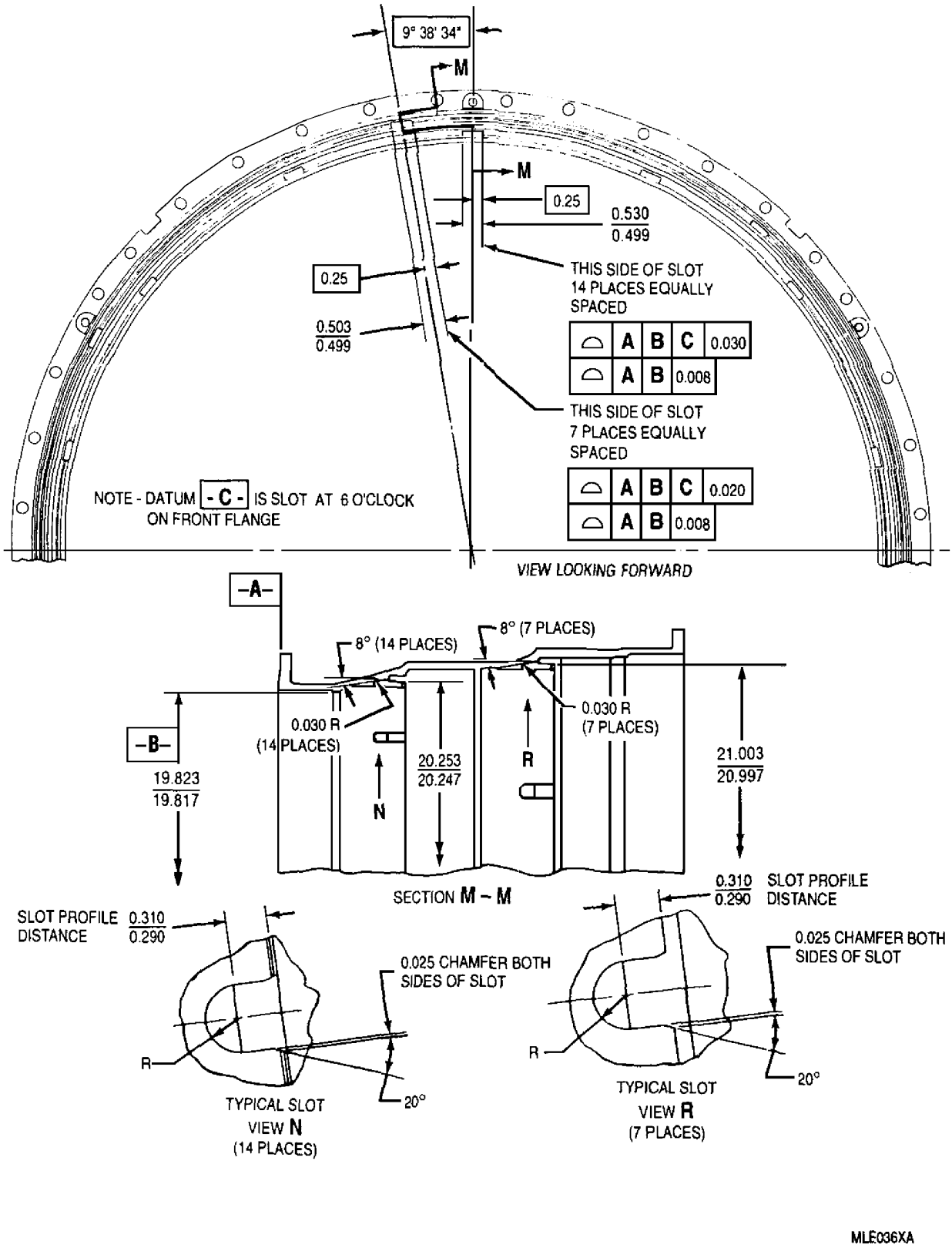

Figure 1. Turbine Vane Case Assembly − Vane Key Slot Repair

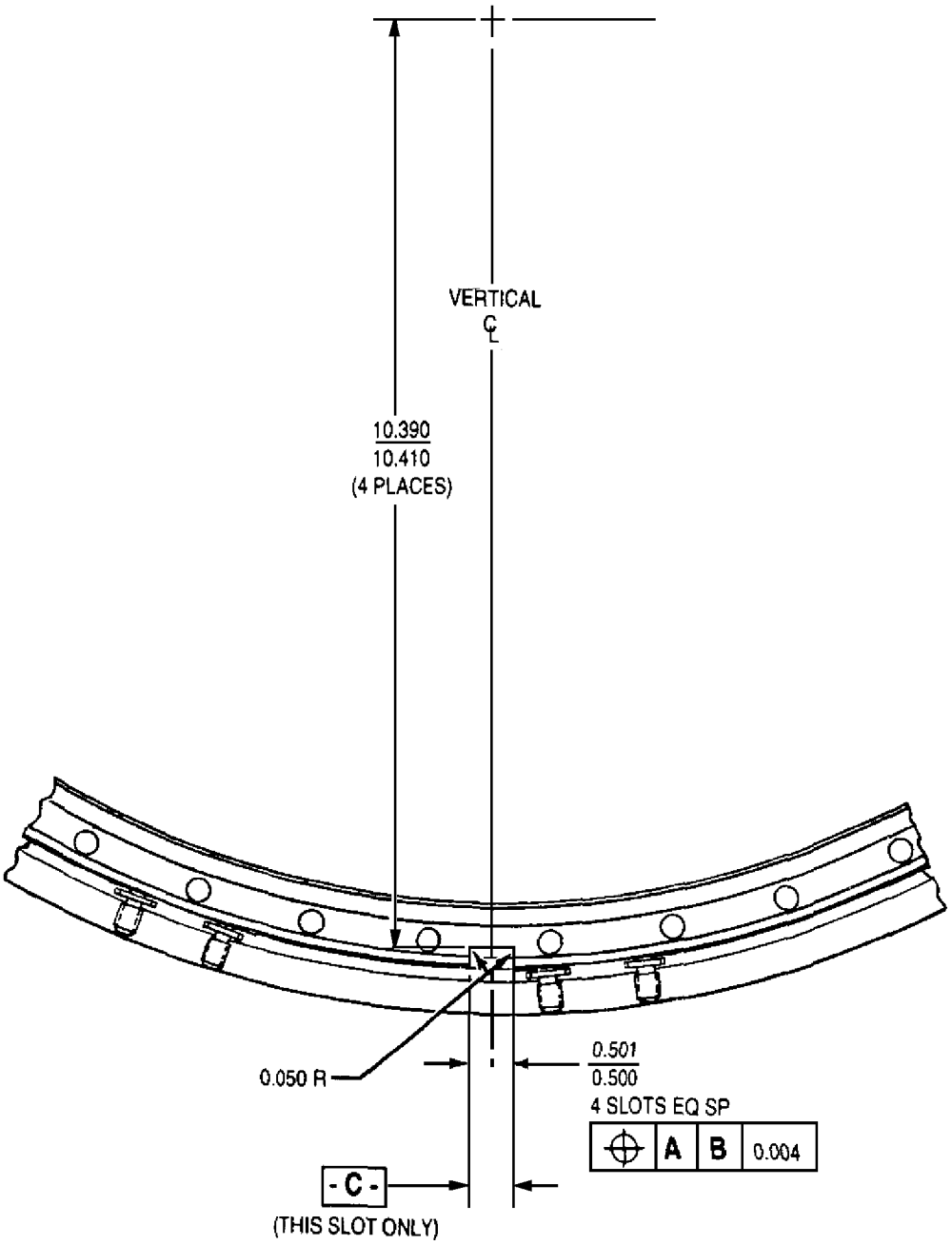

MLE037XA

Figure 2. Turbine Vane Case Assembly − Front Flange Piloting Key Slot Repair

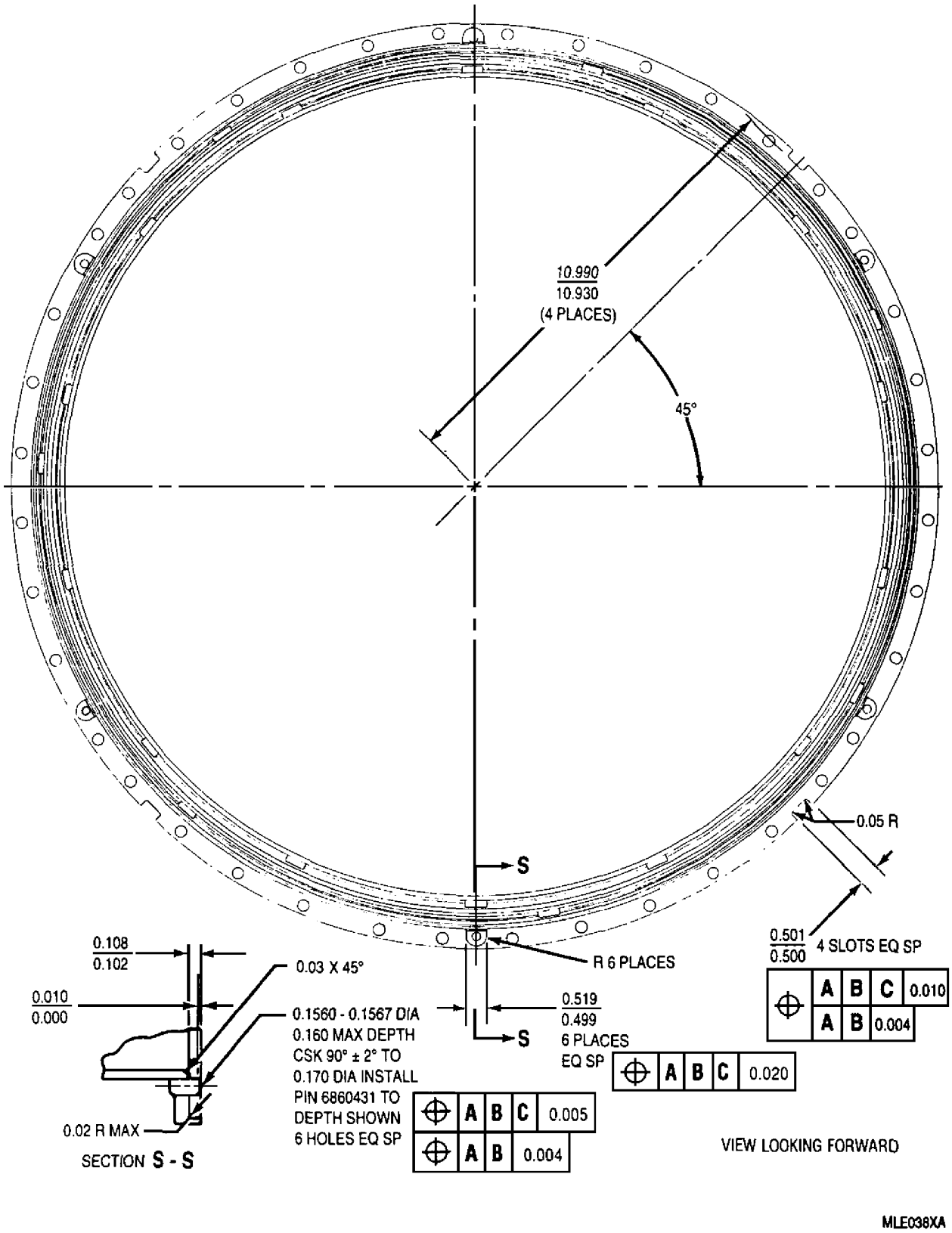

Figure 3. Turbine Vane Case Assembly − Rear Flange Piloting Key Slot Repair and Fourth−Stage Locating Pin Replacement

DEPOT MAINTENANCE

INSPECTION AND REPAIR

REAR TURBINE BEARING SUPPORT ASSEMBLY

Reference Material

Magnetic Particle and Fluorescent Penetrant Inspection − Procedures . . . . . WP 017 00

Alphabetical Index

Subject **Page No.**

Introduction 2
Rear Turbine Bearing Support Assembly 2
Bearing Cage Pilot Diameter Repair 10
Crack Weld Repair 5
Bearing Cavity 8
Crack Removal and Preparation for Welding 5
Front Flange Bolt Hole 8
General Crack Welding Procedures 6
Outer Cone (Excluding Rear Flange Area) 7
Outer Housing 6
Piloting Key Slot 9
Rear Flange Area 7
Stiffener Rings 7
Struts and Attaching Strut Welds 7
Dimensional Inspection 5
Inspection 2
Oil Seal Surface Repair 12
Piloting Key Slot Wear Repair 9
Repair 2
Scavenge Pump Support Flange Repair 11
Stress Relief After Welding 13

Record of Applicable Technical Directives

None

1. **INTRODUCTION.**

2. This work package (WP) provides the instructions for inspection and repair of the rear turbine bearing support assembly used in the T56−A−427 turboprop engine.

3. **REAR TURBINE BEARING SUPPORT ASSEMBLY.**

4. REAR TURBINE BEARING SUPPORT ASSEMBLY − INSPECTION.

Materials Required

Specification No./Part No.	Nomenclature
A−A−883	Tape, masking

a. Inspect rear turbine bearing support assembly. Refer to table 1.

b. Mask vent in struts and strut ends, using A−A−883 masking tape, before fluorescent penetrant inspection (FPI).

c. Refer to WP 017 00 for FPI procedure.

5. REAR TURBINE BEARING SUPPORT ASSEMBLY − REPAIR.

a. Repair rear turbine support assembly. Refer to Disposition column, table 1.

b. Replace support assemblies not within serviceable limits after repair.

Table 1. Rear Turbine Bearing Support Assembly− Inspection and Repair

Condition	Serviceable Limits	Repairable Limits	Disposition
Bearing support assembly. FPI for cracks:			
Outer housing.	Not serviceable.	Any crack.	Weld repair cracks. Refer to paragraph 10, this WP.
Outer cone area, excluding rear flange area.	Not serviceable.	Any crack.	Weld repair cracks. Refer to paragraph 11, this WP.
Rear flange area (clamp area) of outer cone.	Not serviceable.	Any crack.	Weld repair cracks. Refer to paragraph 12, this WP.
Stiffener rings.	Not serviceable.	Any crack.	Weld repair cracks. Refer to paragraph 13, this WP.
Struts and attaching strut welds.	Not serviceable.	Any crack.	Weld repair cracks. Refer to paragraph 14, this WP.
Bearing cavity.	Not serviceable.	Any crack.	Weld repair cracks. Refer to paragraph 15, this WP.
Outward from front flange bolt holes.	Not serviceable.	Any crack.	Weld repair cracks. Refer to paragraph 16, this WP.
Piloting key slots (4 places).	1/8 in. and not extending into parent metal.	Exceeds serviceable limits.	Weld repair cracks. Refer to paragraph 17, this WP.
Bearing support assembly dimensional inspection.	Refer to paragraph 6, this WP.	See Disposition.	Retain recorded results. No repairs are provided in paragraph 6. Features that are repairable are covered in this table.

Table 1. Rear Turbine Bearing Support Assembly− Inspection and Repair (contd)

Condition	Serviceable Limits	Repairable Limits	Disposition
Piloting key slots (4 places):			
Wear.	0.503 in. max width.	Exceeds serviceable limits.	Repair slots. Refer to paragraph 18, this WP.
Bearing cage pilot diameter (2, figure 1):			
Wear or out−of−round.	4.8775 in. max and within 0.003 in. max runout.	4.907 in. max.	Repair diameter. Refer to paragraph 19, this WP.
Scavenge pump support flange surface (4, figure 1):			
Rough or uneven.	Smooth surface texture and parallel to bearing cage flange Surface A within 0.002 in. FIR.	Any roughness.	Repair surface. Refer to paragraph 20, this WP.
Seal surface (6, figure 1):			
Pitted.	No pits or corrosion within 6.994−6.998 in. diametral area on seal surface and parallel with bearing cage flange within 0.002 in. FIR.	Pits or corrosion in the 6.994−6.998 in. diametral area and not parallel with bearing cage flange within 0.002 in. FIR.	Repair surface. Refer to paragraph 21, this WP.
Rear flange (clamp area) diameter (8, figure 1):			
Runout and out−of−round.	0.060 in. max runout and round within 0.060 in. FIR in free state.	Exceeds serviceable limits.	Re−form diameter to within serviceable limits.
Sheet metal parts:			
Nicks and dents.	Six max exceeding 50% of part material thickness. No sharp edges acceptable.	Exceeds serviceable limits.	Blend all sharp edges.
Rear flange (clamp area):			
Corrosion, pitting, and nicks.	0.032 in. max depth. No sharp edges acceptable.	Exceeds serviceable limits.	Blend all sharp edges.
Stiffener rings:			
Corrosion, pitting, and nicks.	0.005 in. max depth and less than 1.000 in. diameter. No sharp edges acceptable.	0.010 max depth.	Blend to 0.010 max depth. Min. wall thickness of 0.100 in. shall be maintained. Blended area shall not exceed 6.00 in. of circumferential length.

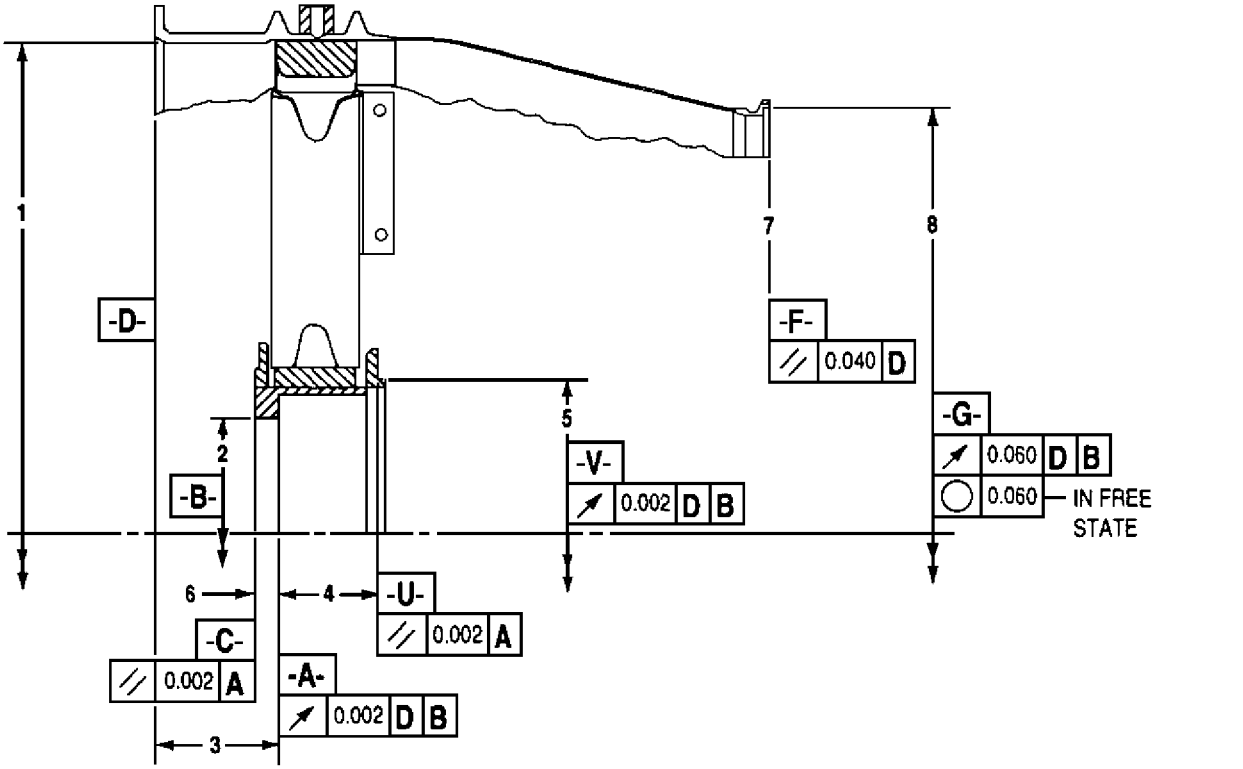

Index No.	Features To Be Measured	Serviceable Limits (in.)	6799520 Detail Indicator Assembly
1.	Front Flange Pilot Diameter.	20.920−20.960	—
2.	Diameter B (Bearing Cage Pilot).	4.8735−4.8775 0.003 max runout FIR.	Detail−202
3.	Surface A to Surface D (Bearing Cage Flange to Front Flange Front Face).	2.683−2.703 0.002 max runout FIR.	Detail−203
4.	Surface U to Surface A (Pump Support Flange to Bearing Cage Flange).	2.087−2.091 Parallel within 0.002 FIR.	Detail−204
5.	Diameter V (Pump Support Pilot).	6.4970−6.5000 0.002 max runout FIR.	Detail−204
6.	Surface C Parallel to Surface A (Oil Seal Surface to Bearing Cage Flange).	Parallel within 0.002 FIR.	—
7.	Surface F Parallel to Surface D (Rear Flange Rear Face to Front Flange Front Face).	Parallel within 0.040 FIR.	—
8.	Diameter G (Rear Flange).	18.053−18.073 AVG and 0.060 max runout FIR. Round within 0.060 FIR in free state.	—

Figure 1. Rear Turbine Bearing Support Assembly − Dimensional Inspection

6. REAR TURBINE BEARING SUPPORT ASSEMBLY − DIMENSIONAL INSPECTION. (figure 1)

Support Equipment Required

Part No./Type Designation	Nomenclature
23034278	Fixture, inspection
6799520	Fixture, inspection
——	Gage, feeler, 0.001 in.

CAUTION

Diameter B (2, figure 1) is first feature inspected after the support assembly is installed in 23034278 fixture. Form tolerances of other features being inspected are relative to this diameter.

a. Record all dimensions and form tolerances taken during inspection. The results will determine serviceability of the support assembly and will be used to (comparison) check the support assembly for distortion after weld repair:

b. Measure front flange pilot diameter (1).

c. Install rear turbine bearing support assembly in 23034278 fixture. Tighten detail clamps to seat and secure support assembly. Using 0.001 in feeler gage, check seating of support assembly in fixture.

d. Check accuracy of 6799520−202, −203, and −204 indicator arm assemblies using 6799520−206 master assembly.

e. Install 23034278−15 indicating arbor in base plate center bore. Install 6799520−202 indicator arm assembly on arbor and measure Diameter B. Record result.

f. Remove 6799520−202 arm assembly and install 6799520−203 indicator arm assembly on arbor. Measure distance from Surface A (3) to Surface D and runout of Surface A with Surface D and Diameter B. Record results.

g. Remove 6799520−203 arm assembly and 23034278−15 arbor.

h. Install 6799520−204 indicator arm assembly into Diameter B and secure with detail thumb screws. Using 0.001 in. feeler gage, check seating of arm assembly on Surface C (6).

i. Measure Surface U (4) parallelism to Surface A. Measure Diameter V (5) and runout with Surface D and Diameter B. Record results.

j. Remove 6799520−204 arm assembly.

k. Using standard shop method, measure distance and parallelism of Surface C (6) to Surface A. Record results.

l. Using standard shop method, measure parallelism of Surface F (7) to Surface D. Record result.

m. Using standard shop method, measure average of Diameter G (8) and runout with Surface D and Diameter B. Record results.

n. Remove support assembly from fixture and measure Diameter G in free state. Record result.

7. REAR TURBINE BEARING SUPPORT ASSEMBLY − CRACK WELD REPAIR.

8. Crack Removal and Preparation for Welding.

Support Equipment Required

Part No./Type Designation	Nomenclature
MIL−B−23958	Brush, cleaning, stainless steel
——	File, rotary

Materials Required

Specification No./Part No.	Nomenclature
ASTM D740−8 or	Methyl−ethyl−ketone
O−A−51	Acetone

a. Using rotary file, route cracks as follows:

(1) Remove material from both sides of crack to minimum depth and width that exposes 0.125 in. of sound metal beyond each end of crack.

(2) When routing strut and strut attaching weld cracks, connect shop air to vent holes to prevent chips and filing particles from entering strut interior.

(3) Route minimum material to remove crack indication. Do not exceed 80% of material thickness.

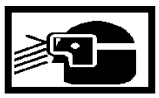

Compressed Air **56**

b. Remove loose chips and filing particles using shop air or stainless steel brush.

c. FPI crack area per WP 017 00, (cracks routed less than 80% of material thickness) for complete crack removal.

Acetone O−A−51 **61**

d. Clean surface contaminants from weld area using ASTM D740−8 methyl−ethyl−ketone or O−A−51 acetone.

9. General Crack Welding Procedures.

Support Equipment Required

Part No./Type Designation	Nomenclature
MIL−B−23958	Brush, cleaning, stainless steel

a. Cracks shall be welded using the welding method and filler metal specified in the paragraph applicable to the area being welded.

b. Cracks 0.750 in. or less in length shall be welded in one pass starting at one end.

c. Cracks 0.750−1.500 in. in length shall be tack welded at mid−point. Complete first pass to mid−point and allow weld to cool. Start second pass at opposite end and complete weld.

d. Cracks exceeding 1.500 in. in length shall be tack welded at 0.750 in. intervals. Use the following sequence to complete weld.

NOTE

Each pass is 0.750 in. in length.

(1) Start first pass at one end and weld towards the center. Allow weld to cool.

(2) Start second pass at opposite end and weld towards the center. Allow weld to cool.

(3) Continue to weld alternating direction of each pass. Allow each weld to cool before starting next pass.

e. Weld bead height shall not exceed 0.060 in. above adjacent parent metal. Dress weld flush to 0.060 in. above parent metal.

f. Using stainless steel brush, remove surface contamination in weld area.

10. Outer Housing − Crack Weld Repair.

Support Equipment Required

Part No./Type Designation	Nomenclature
23034277	Fixture, weld

Materials Required

Specification No./Part No.	Nomenclature
AMS 5832	Wire, welding
MIL−T−81533	Trichloroethane 1,1,1

a. Remove crack indication and prepare area for welding. Refer to Crack Removal and Preparation for welding, this WP.

b. Install rear turbine bearing support assembly in 23034277 weld fixture. Secure with detail clamps.

c. Weld crack using GTAW method and AMS 5832 welding wire. Refer to General Crack Welding Procedure, this WP.

d. Remove support assembly from fixture.

Trichloroethane MIL−T−81533 **10**

e. Clean weld repair area using MIL−T−81533 1,1,1 trichloroethane.

f. FPI weld for defects per WP 017 00.

g. Repeat dimensional inspection (paragraph 6) of support assembly for distortion. Compare results to previously recorded dimensions. Dimensions may vary (from previous recorded dimensions) but shall not exceed serviceable limits (figure 1).

h. Stress relieve support assembly. Refer to paragraph 22, this WP.

11. Outer Cone (Excluding Rear Flange Area) − Crack Weld Repair. Repair outer cone crack using outer housing crack weld procedure. Refer to paragraph 10, this WP.

12. Rear Flange Area − Crack Weld Repair. Repair rear flange area crack using outer housing crack weld procedure. Refer to paragraph 10, this WP.

13. Stiffener Rings − Crack Weld Repair. Repair stiffener ring crack using outer housing crack weld procedure. Refer to paragraph 10, this WP.

14. Struts and Attaching Strut Welds − Crack Weld Repair.

Support Equipment Required

Part No./Type Designation	Nomenclature
23034277	Fixture, weld

Materials Required

Specification No./Part No.	Nomenclature
A−A−883	Tape, masking
AMS 5832	Wire, welding
MIL−A−18455	Argon, technical
MIL−T−81533	Trichloroethane 1,1,1

a. Remove crack indication and prepare area for welding. Refer to Crack Removal and Preparation for Welding, this WP.

b. Install rear turbine bearing support assembly in 23034277 weld fixture. Secure with detail clamps.

c. During welding, purge strut cavity with MIL−A−18455 technical argon as follows:

(1) Insert a 0.125 in. diameter tube into strut vent hole (0.156 in. dia) on side of strut. Tape tube to keep it in place.

(2) Initially purge strut for ten minutes at flow rate of 10 cu ft/hr then reduce flow rate to 5 cu ft/hr for welding.

d. Weld crack using GTAW method and AMS 5832 welding wire. Refer to General Crack Welding Procedure, this WP.

e. Shut off argon and remove purge tube from strut.

f. Remove support assembly from fixture.

Trichloroethane MIL−T−81533 **10**

g. Clean strut repair area using MIL−T−81533 1,1,1 trichloroethane.

h. FPI weld for defects per WP 017 00.

i. Repeat dimensional inspection (paragraph 6) of support assembly for distortion. Compare results to previously recorded dimensions. Dimensions may vary (from previously recorded dimensions) but shall not exceed serviceable limits (figure 1).

j. Stress relieve support assembly. Refer to paragraph 22, this WP.

15. Bearing Cavity − Crack Weld Repair.

Support Equipment Required

Part No./Type Designation	Nomenclature
23034277	Fixture, weld

Materials Required

Specification No./Part No.	Nomenclature
AMS 5782 or AMS 5784	Wire, welding
MIL−T−81533	Trichloroethane 1,1,1

a. Remove crack indication and prepare area for welding. Refer to Crack Removal and Preparation for Welding, this WP.

b. Install rear turbine bearing support assembly in 23034277 weld fixture. Secure with detail clamps.

c. Weld crack using GTAW method and AMS 5782 or AMS 5784 welding wire. Refer to General Crack Welding Procedure, this WP.

d. Remove support assembly from fixture.

Trichloroethane MIL−T−81533 **10**

e. Clean bearing cavity area using MIL−T−81533 1,1,1 trichloroethane.

f. FPI weld for defects per WP 017 00.

g. Remove any weld bead present on oil seal surface, scavenge pump support flange surface, or bearing cage pilot diameter. Refer to applicable paragraph 19, 20, or 21, this WP.

h. Remove excess weld extending inside the 2.944 − 2.958 in. radius of the bearing cage support.

i. Repeat dimensional inspection (paragraph 6) of support assembly for distortion. Compare results to previously recorded dimensions. Dimensions may vary (from previously recorded dimensions) but shall not exceed serviceable limits (figure 1).

j. Stress relieve support assembly. Refer to paragraph 22, this WP.

16. Front Flange Bolt Hole − Crack Weld Repair.

Materials Required

Specification No./Part No.	Nomenclature
AMS 5832	Wire, welding
MIL−T−81533	Trichloroethane 1,1,1

a. Remove crack indication and prepare area for welding. Refer to Crack Removal and Preparation for Welding, this WP.

b. Weld crack using GTAW method and AMS 5832 welding wire. Refer to General Crack Welding Procedure, this WP.

Trichloroethane MIL−T−81533 **10**

c. Clean bolt hole area using MIL−T−81533 1,1,1 trichloroethane.

d. FPI weld for defects per WP 017 00.

e. Remove excess weld from bolt hole (0.279 − 0.288 in. dia) and flange faces.

f. Repeat dimensional inspection (paragraph 6) of support assembly for distortion. Compare results to previously recorded dimensions. Dimensions may vary (from previously recorded dimensions) but shall not exceed serviceable limits (figure 1).

g. Stress relieve support assembly. Refer to paragraph 22, this WP.

17. Piloting Key Slot − Crack Weld Repair. (figure 2)

Support Equipment Required

Part No./Type Designation	Nomenclature
6797958	Fixture, milling

Materials Required

Specification No./Part No.	Nomenclature
AMS 5832	Wire, welding
MIL−T−81533	Trichloroethane 1,1,1

a. Remove crack indication and prepare area for welding. Refer to Crack Removal and Preparation for Welding, this WP.

b. Weld crack using GTAW method and AMS 5832 welding wire. Refer to General Crack Welding Procedure, this WP.

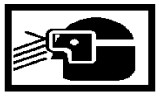

Trichloroethane MIL−T−81533 10

c. Clean slot repair area using MIL−T−81533 1,1,1 trichloroethane.

d. FPI weld for defects per WP 017 00.

e. Stress relieve support assembly. Refer to paragraph 22, this WP.

f. Install rear turbine bearing support assembly in 6797958 milling fixture using Detail −204 ring assembly with Detail −200 base assembly.

g. Mill slot at location shown (figure 2).

h. Remove support assembly from fixture and break slot sharp edges 0.010 in. maximum.

i. Repeat dimensional inspection (paragraph 6) of support assembly for distortion. Compare results to previously recorded dimensions. Dimensions may vary (from previously recorded dimensions) but shall not exceed serviceable limits (figure 1).

18. REAR TURBINE BEARING SUPPORT ASSEMBLY − PILOTING KEY SLOT WEAR REPAIR. (figure 2)

Materials Required

Specification No./Part No.	Nomenclature
AMS 5832	Wire, welding
MIL−T−81533	Trichloroethane 1,1,1

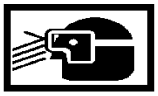

Trichloroethane MIL−T−81533 10

a. Clean slot using MIL−T−81533 1, 1, 1 trichloroethane.

b. Weld buildup wear area of slot using GTAW method and AMS 5832 welding wire. Buildup thickness shall be sufficient to obtain finish dimensions. Refer to figure 2.

c. Stress relieve rear turbine bearing support assembly. Refer to paragraph 22, this WP.

d. Machine slot at location shown (figure 2).

e. Break slot sharp edges 0.010 in. maximum.

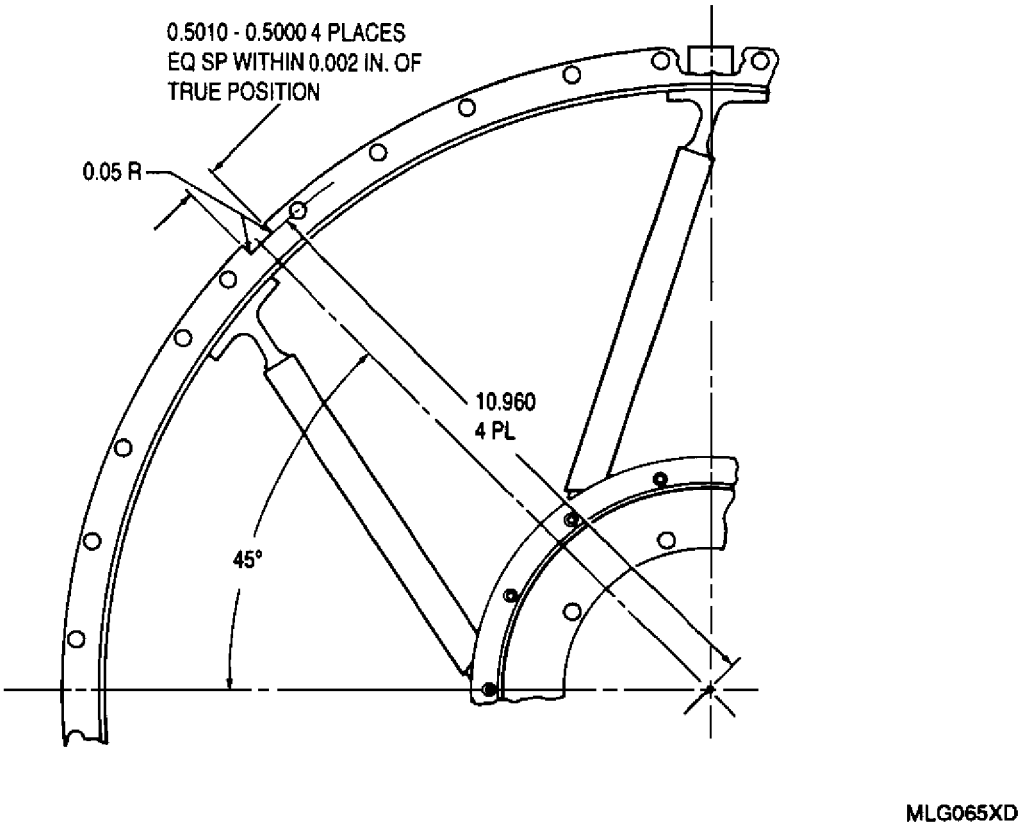

Figure 2. Rear Turbine Bearing Support Assembly − Piloting Key Slot Repair

19. REAR TURBINE BEARING SUPPORT ASSEMBLY − BEARING CAGE PILOT DIAMETER REPAIR. (figure 3)

Support Equipment Required

Part No./Type Designation	Nomenclature
23034278	Fixture, inspection
6799520	Fixture, inspection
——	Gage, feeler, 0.001 in.

Materials Required

Specification No./Part No.	Nomenclature
Metco 404	Powder, nickel−aluminum
——	Grit, aluminum oxide, 20−40 mesh

a. Machine pilot diameter (Diameter B) to clean up wear or out−of−round condition. Remove minimum material for cleanup but do not exceed 4.9065 in. diameter. Refer to figure 3.

b. Abrasive blast pilot diameter using 20−40 mesh aluminum oxide grit.

c. Preheat bearing cage support at 175 − 200°F (79−93°C) for one hour.

d. Spray pilot diameter surface with Metco 404 nickel−aluminum powder using plasma spray or thermal spray process. Thickness shall be sufficient to obtain finish dimensions.

e. Finish machine pilot diameter to dimension (1, figure 3) maintaining concentricity to assembly axis within 0.001 in. FIR.

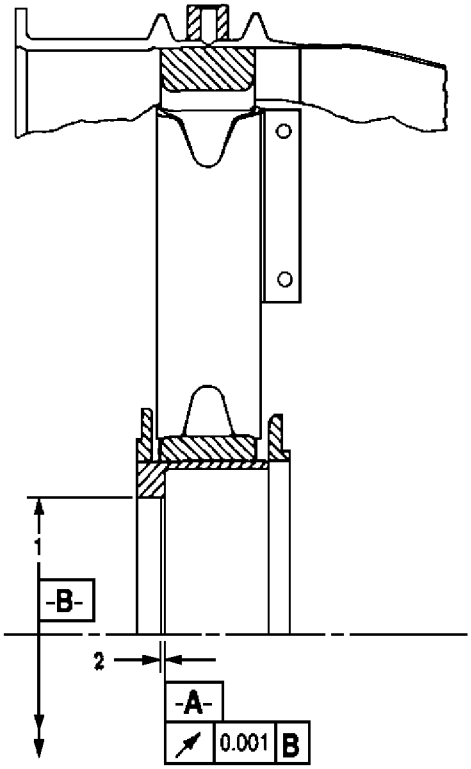

1. 4.8745 - 4.8765 INCH DIAMETER

2. 0.025 - 0.055 INCH X 45° CHAMFER

DIAMETER B RUNOUT WITH SURFACE A SHALL BE WITHIN 0.001 INCH FIR

MLG066XD

Figure 3. Rear Turbine Bearing Support Assembly − Bearing Cage Pilot Diameter Repair

f. Restore chamfer (2).

g. Dimensionally inspect finished pilot diameter using 23034278 fixture and 6799520−202 and −203 indicator arm assemblies as follows:

(1) Install support assembly in 23034278 fixture. Tighten detail clamps to seat and secure assembly. Using 0.001 in. feeler gage, check seating of assembly.

(2) Check accuracy of 6799520−202 and −203 indicator arm assemblies using 6799520 − 206 master assembly.

(3) Install 23034278−15 indicating arbor into center bore of base plate. Install 6799520−202 indicator arm assembly on arbor.

(4) Measure runout (concentricity) of pilot diameter (Diameter B).

(5) Remove 6799520−202 arm assembly from arbor and install 6799520−203 indicator arm assembly.

(6) Measure runout (squareness) of Surface A to Diameter B.

(7) Remove arm assembly from arbor.

(8) Remove support assembly from fixture.

20. REAR TURBINE BEARING SUPPORT ASSEMBLY − SCAVENGE PUMP SUPPORT FLANGE REPAIR. (figure 4)

Support Equipment Required

Part No./Type Designation	Nomenclature
23034278	Fixture, inspection
6799520	Fixture, inspection
——	Gage, feeler, 0.001 in.

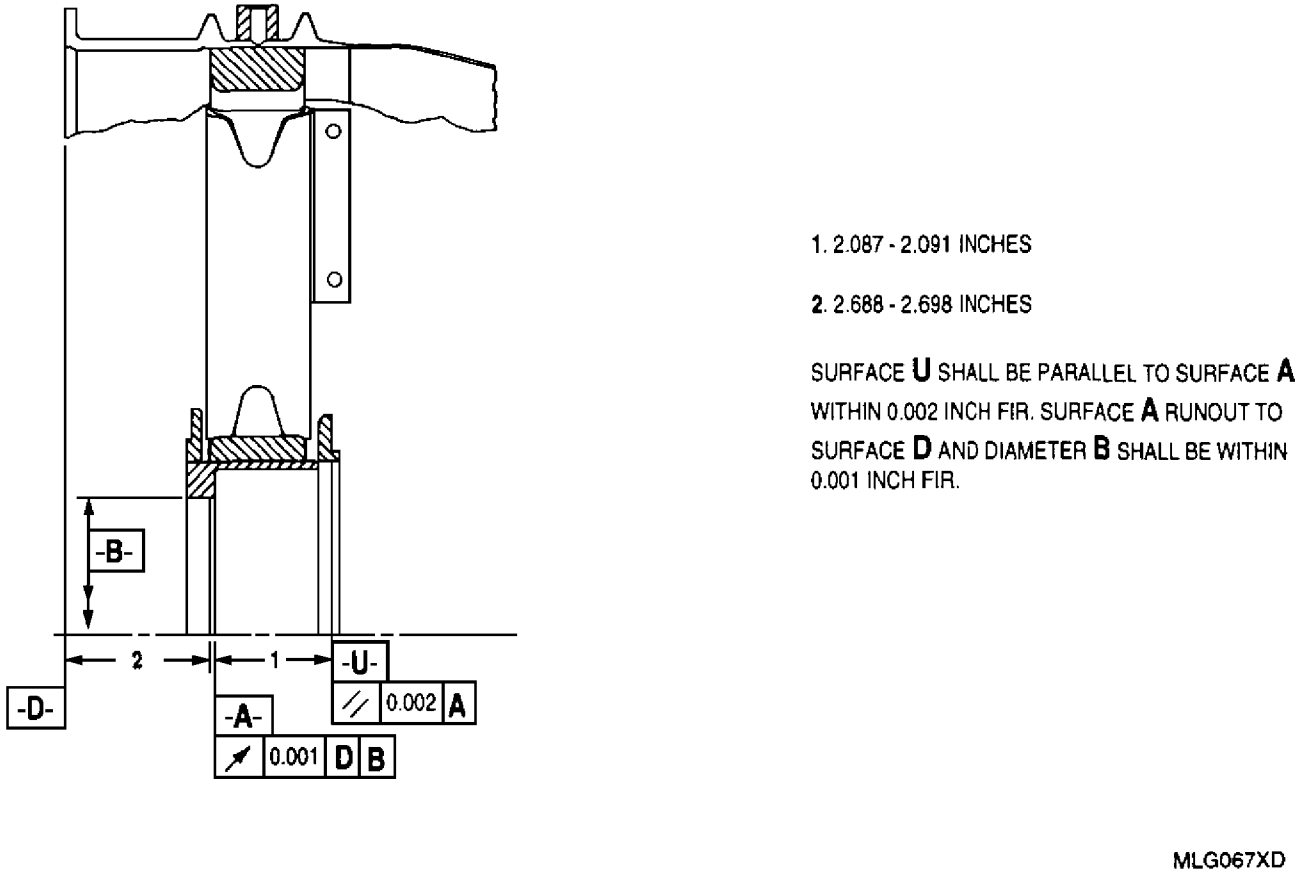

Figure 4. Rear Turbine Bearing Support Assembly − Scavenge Pump Support Flange Repair

a. Machine scavenge pump support flange face (Surface V) to obtain a 40 RMS surface texture parallel with Surface A. Refer to figure 4.

b. Machine material from Surface A if necessary to meet parallelism requirements. Maintain dimensions and runout requirements to Surface A and Surface D as shown.

c. Dimensionally inspect finished pump support flange using 23034278 inspection fixture and 6799520−203 and −204 indicator arm assemblies as follows:

(1) Install support assembly in 23034278 fixture. Tighten detail clamps to seat and secure assembly. Using 0.001 in. feeler gage, check seating of assembly.

(2) Check accuracy of 6799520 −203 and −204 indicator arm assemblies using 6799520−206 master.

(3) Install 23034278−15 indicating arbor in center bore of base plate. Install 6799520−203 indicator arm assembly on arbor.

(4) Measure runout of Surface A to Surface D and Diameter B.

(5) Remove 6799520−203 arm assembly and 23034278−15 arbor from base plate.

(6) Install 6799520−204 indicator arm assembly into bearing cage pilot diameter and secure with detail thumbscrews. Using 0.001 in. feeler gage, check seating of indicator arm assembly on oil seal surface.

(7) Measure pump support flange face (Surface U) parallelism to Surface A.

(8) Remove arm assembly from bearing cage pilot diameter.

(9) Remove support assembly from fixture.

21. REAR TURBINE BEARING SUPPORT ASSEMBLY − OIL SEAL SURFACE REPAIR. (figure 5)

a. Machine minimum material from oil seal surface (Surface C) to clean up wear and pitting. Do not remove more than 0.010 in. from this surface. Refer to figure 5.

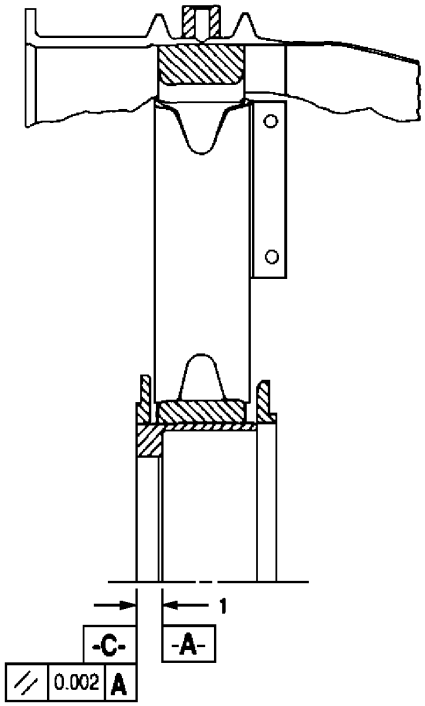

1. 0.487 - 0.507 INCH

SURFACE C SHALL BE PARALLEL TO SURFACE A WITHIN 0.002 INCH FIR

MLG068XD

Figure 5. Rear Turbine Bearing Support Assembly − Oil Seal Surface Repair

b. Machine Surface C to obtain a 40 RMS surface texture parallel with Surface A as shown.

22. REAR TURBINE BEARING SUPPORT ASSEMBLY − STRESS RELIEF AFTER WELDING.

Support Equipment Required

Part No./Type Designation	Nomenclature
23034276	Fixture, heat treat
——	Gloves, insulated

a. Install rear turbine bearing support assembly in 23034276 heat treat fixture as follows:

(1) Install support assembly in fixture with bearing cage pilot diameter over fixture shaft and aligned with Detail −9 spacer.

(2) Place Detail −6 ring (2 halves) on rear face of front flange.

(3) Install Detail −3 clamps over pins. Install Detail −4 wedges through slots in pins with tapered side up.

(4) Drive wedges into pin slots until moderately tight using a non−metallic mallet.

(5) Install Detail −10 pressure cap over fixture shaft and seated on bearing cage flange. Install Detail −11 wedge in slot of shaft with tapered side up.

(6) Drive wedge into slot until moderately tight using a non−metallic mallet.

b. Place unit in oven and heat treat in a vacuum at 1200°F (649°C) for three hours.

c. Cool down in oven to 500°F (260°C).

CAUTION

Heated parts will cause skin damage (burns). Use clean insulated gloves to handle parts.

d. Remove unit from oven and allow to air cool.

e. Remove wedges using non−metallic mallet. Remove pressure cap and clamps.

f. Remove support assembly from fixture.

DEPOT MAINTENANCE

INSPECTION AND REPAIR

FORWARD FLOWPATH INNER SHROUD AND INNER REAR EXHAUST CONE ASSEMBLY

Reference Material

Magnetic Particle and Fluorescent Penetrant Inspection − Procedures . . . . . WP 017 00

Alphabetical Index

Subject **Page No.**

Forward Flowpath Inner Shroud 2
- Crack Weld Repair 2
- Inside (Slotted) Diameter Wear Repair 4
- Inspection 2
- Mounting Flange Bolt Hole Repair 3
- Repair 2

Inner Rear Exhaust Cone Assembly 4
- Crack Weld Repair 5
- Inspection 4
- Mounting Bolt Hole Repair 5
- Outside (Slotted) Diameter Wear Repair 5
- Repair 5
- Threaded (Puller) Plug Replacement 5

Introduction 2

Record of Applicable Technical Directives

None

1. **INTRODUCTION.**

2. This work package (WP) provides the instructions for inspection and repair of the forward flowpath inner shroud and inner rear exhaust cone assembly used on the T56−A−427 turboprop engine.

3. **FORWARD FLOWPATH INNER SHROUD.**

4. FORWARD FLOWPATH INNER SHROUD − INSPECTION.

a. Inspect forward flowpath inner shroud. Refer to table 1.

b. Refer to WP 017 00 for fluorescent penetrant inspection (FPI) procedures.

5. FORWARD FLOWPATH INNER SHROUD − REPAIR.

a. Repair forward flowpath inner shroud. Refer to Disposition column, table 1.

b. Replace forward flowpath inner shrouds not within serviceable limits after repair.

Table 1. Forward Flowpath Inner Shroud − Inspection and Repair

Condition	Serviceable Limits	Repairable Limits	Disposition
Forward flowpath inner shroud FPI:			
Cracks.	Not serviceable.	Any crack.	Weld repair. Refer to paragraph 6, this WP.
Mounting flange bolt holes:			
Elongated or damaged.	0.228 in. max dia.	Exceeds serviceable limits.	Weld repair. Refer to paragraph 7, this WP.
Inside (slotted) diameter (rear cone contact area):			
Wear.	0.025 in. max depth. No sharp edges allowable. Blend sharp edges.	Exceeds serviceable limits.	Weld repair. Refer to paragraph 8, this WP.

6. FORWARD FLOWPATH INNER SHROUD − CRACK WELD REPAIR.

Materials Required

Specification No./Part No.	Nomenclature
MIL−B−23958	Brush, stainless steel
MIL−E−6844, Class 6 or 9	Electrode, welding
or	
MIL−R−5306 Class 6	Rod, welding
MIL−T−81533	Trichloroethane, 1,1,1

a. Stop drill end of crack using a 1/32 in. drill.

Trichloroethane MIL−T−81533 10

b. Clean crack area using MIL−T−81533 1,1,1 trichloroethane.

c. Weld crack using SMAW method and MIL−E−6844, Class 6 or 9 welding electrode or weld using GTAW method and MIL−R−5306, Class 6 welding rod.

d. Clean weld bead using MIL−B−23958 stainless steel brush.

e. Weld bead height shall not exceed 0.060 in. Dress weld bead flush with adjacent surface on assembly contact surfaces.

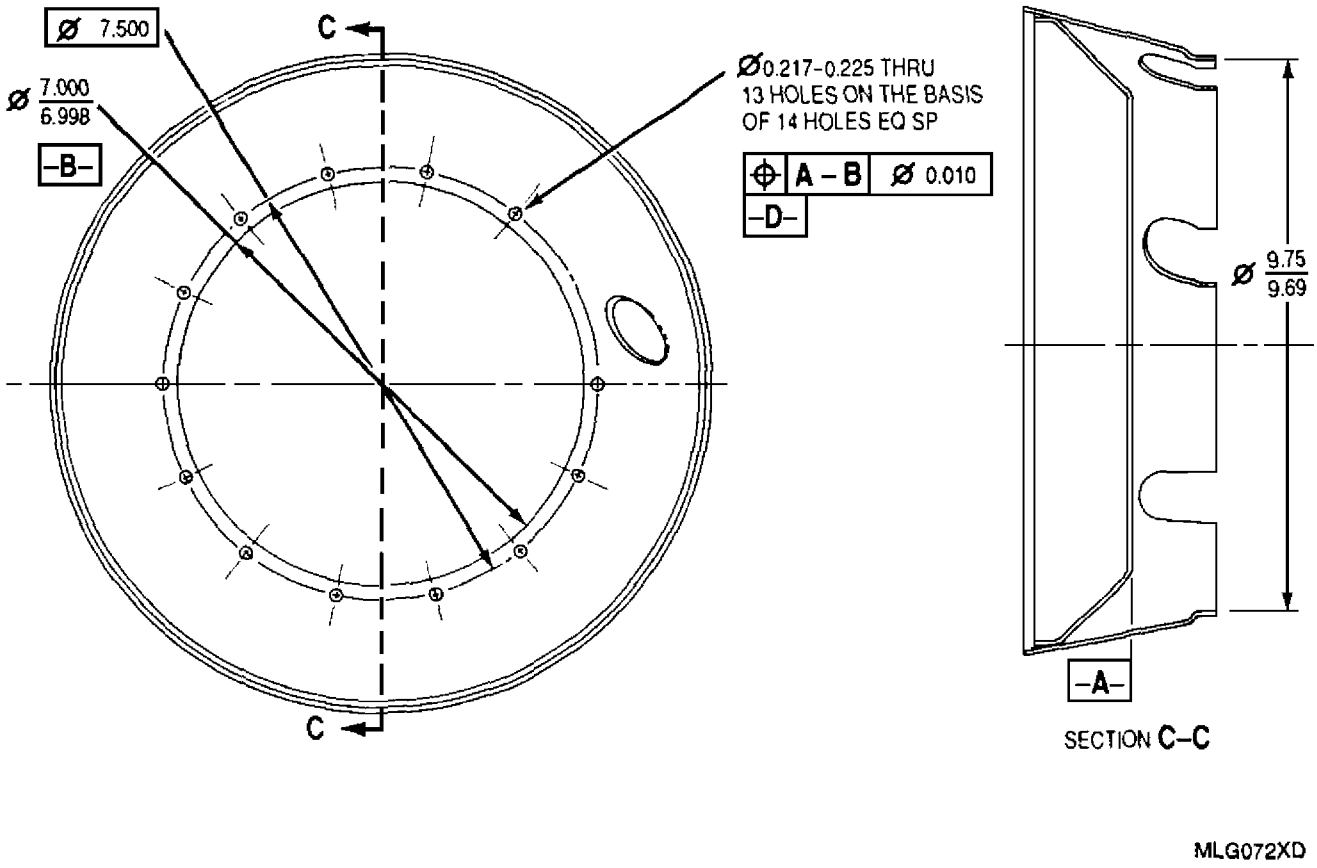

Figure 1. Forward Flowpath Inner Shroud − Bolt Hole and Inside (Slotted) Diameter Repair

7. FORWARD FLOWPATH INNER SHROUD − MOUNTING FLANGE BOLT HOLE REPAIR. (figure 1)

Materials Required

Specification No./Part No.	Nomenclature
AMS 5782	Wire, welding
or	Wire, welding
AMS 5784	
MIL−T−81533	Trichloroethane, 1,1,1

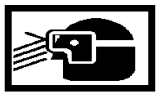

Trichloroethane MIL−T−81533 **10**

a. Clean worn or damaged hole area using MILT−81533 1,1,1 trichloroethane.

b. Weld buildup repair area using GTAW method and AMS 5782 or AMS 5784 welding wire. Buildup shall be sufficient to obtain finish dimension. Refer to figure 1.

c. Dress weld flush with adjacent surfaces on flange faces and inside diameter.

d. Locate and machine bolt hole to true position requirements shown.

e. Break sharp edges 0.005 in. maximum.

Table 2. Inner Rear Exhaust Cone Assembly − Inspection and Repair

Condition	Serviceable Limits	Repairable Limits	Disposition
Inner rear exhaust cone assembly FPI: Cracks.	Not serviceable.	Any crack.	Weld repair. Refer to paragraph 12, this WP.
Mounting bolt holes: Elongated or damaged.	0.291 in. max dia.	Exceeds serviceable limits.	Weld repair. Refer to paragraph 13, this WP.
Outside (slotted) diameter (flowpath shroud contact area): Wear.	0.025 in. min thickness.	0.010 in. min thickness.	Worn or damaged areas that do not exceed 2.00 in. in length or 10% of the total area may be weld repaired per paragraph 14, this WP. More extensive damage may be repaired with metal spray method using Metcoloy No. 2 stainless wire with a 0.001−0.002 in. thick bonding coat of Sprabond.
Threaded (puller) plug: Damaged.	Minor nicks and burrs provided a 0.375−16 UNJC bolt can be threaded in without binding. Chase thread with tap.	Exceeds serviceable limits.	Replace plug. Refer to paragraph 15, this WP.

8. FORWARD FLOWPATH INNER SHROUD − INSIDE (SLOTTED) DIAMETER WEAR REPAIR. (figure 1)

Materials Required

Specification No./Part No.	Nomenclature
MIL−E−6844, Class 6 or 9	Electrode, welding
or	
MIL−R−5031 Class 6	Rod, welding
MIL−T−81533	Trichloroethane, 1,1,1

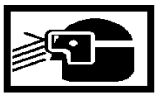

Trichloroethane MIL−T−81533 **10**

a. Clean worn area using MIL−T−81533 1,1,1 trichloroethane.

b. Weld buildup worn area using GTAW method, and MIL−R−5031, Class 6 welding rod or weld using SMAW method and MIL−E−6844, Class 6 or 9 welding electrode. Buildup shall be sufficient to obtain finish thickness with thickness of unworn adjacent areas.

c. Dress weld buildup flush with adjacent areas and within limits of the inside diameter dimension. Refer to figure 1.

d. Break sharp edges 0.005 in. maximum.

9. **INNER REAR EXHAUST CONE ASSEMBLY.**

10. INNER REAR EXHAUST CONE ASSEMBLY − INSPECTION.

a. Inspect inner rear exhaust cone assembly. Refer to table 2.

b. Refer to WP 017 00 for fluorescent penetrant inspection (FPI) procedure.

11. INNER REAR EXHAUST CONE ASSEMBLY − REPAIR.

a. Repair inner rear exhaust cone assembly. Refer to Disposition column, table 2.

b. Replace inner rear exhaust cone assemblies not within serviceable limits after repair.

12. INNER REAR EXHAUST CONE ASSEMBLY − CRACK WELD REPAIR. Weld repair cracks. Refer to paragraph 6, this WP.

13. INNER REAR EXHAUST CONE ASSEMBLY − MOUNTING BOLT HOLE REPAIR. (figure 2)

Materials Required

Specification No./Part No.	Nomenclature
AMS 5782 or AMS 5784	Wire, welding
MIL−T−81533	Trichloroethane, 1,1,1

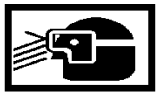

Trichloroethane MIL−T−81533 10

a. Clean worn or damaged hole area on both sides using MIL−T−81533 1,1,1 trichloroethane.

b. Weld buildup bolt pocket side and stiffener side of hole using GTAW method and AMS 5782 or AMS 5784 welding wire. Buildup shall be sufficient to obtain finish dimension. Refer to figure 2.

c. Dress weld flush with bolt pocket surface and stiffener adjacent surface and inside diameter.

d. Locate and machine bolt hole to true position requirements shown.

e. Break sharp edges 0.005 in. maximum.

14. INNER REAR EXHAUST CONE ASSEMBLY − OUTSIDE (SLOTTED) DIAMETER WEAR REPAIR. (figure 2)

Materials Required

Specification No./Part No.	Nomenclature
AMS 5782 or AMS 5784	Wire, welding
MIL−T−81533	Trichloroethane, 1,1,1

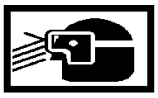

Trichloroethane MIL−T−81533 10

a. Clean worn area using MIL−T−81533 1,1,1 trichloroethane.

b. Weld buildup worn area using GTAW method and AMS 5782 or 5784 welding wire. Build shall be sufficient to obtain finish thickness with thickness of unworn adjacent areas.

c. Dress weld buildup flush with adjacent areas and within limits of the outside diameter dimension.

d. Break sharp edges 0.005 in. maximum.

15. INNER REAR EXHAUST CONE ASSEMBLY − THREADED (PULLER) PLUG REPLACEMENT.

Materials Required

Specification No./Part No.	Nomenclature
AMS 5645 or AMS 5646	Material, stock
AMS 5782 or AMS 5784	Wire, welding
MIL−T−81533	Trichloroethane, 1,1,1

a. Remove damaged plug from cone assembly by machining. Hold diameter within limits of View A, figure 2.

b. Fabricate replacement plug from AMS 5645 or AMS 5646 material to requirements shown except for the following:

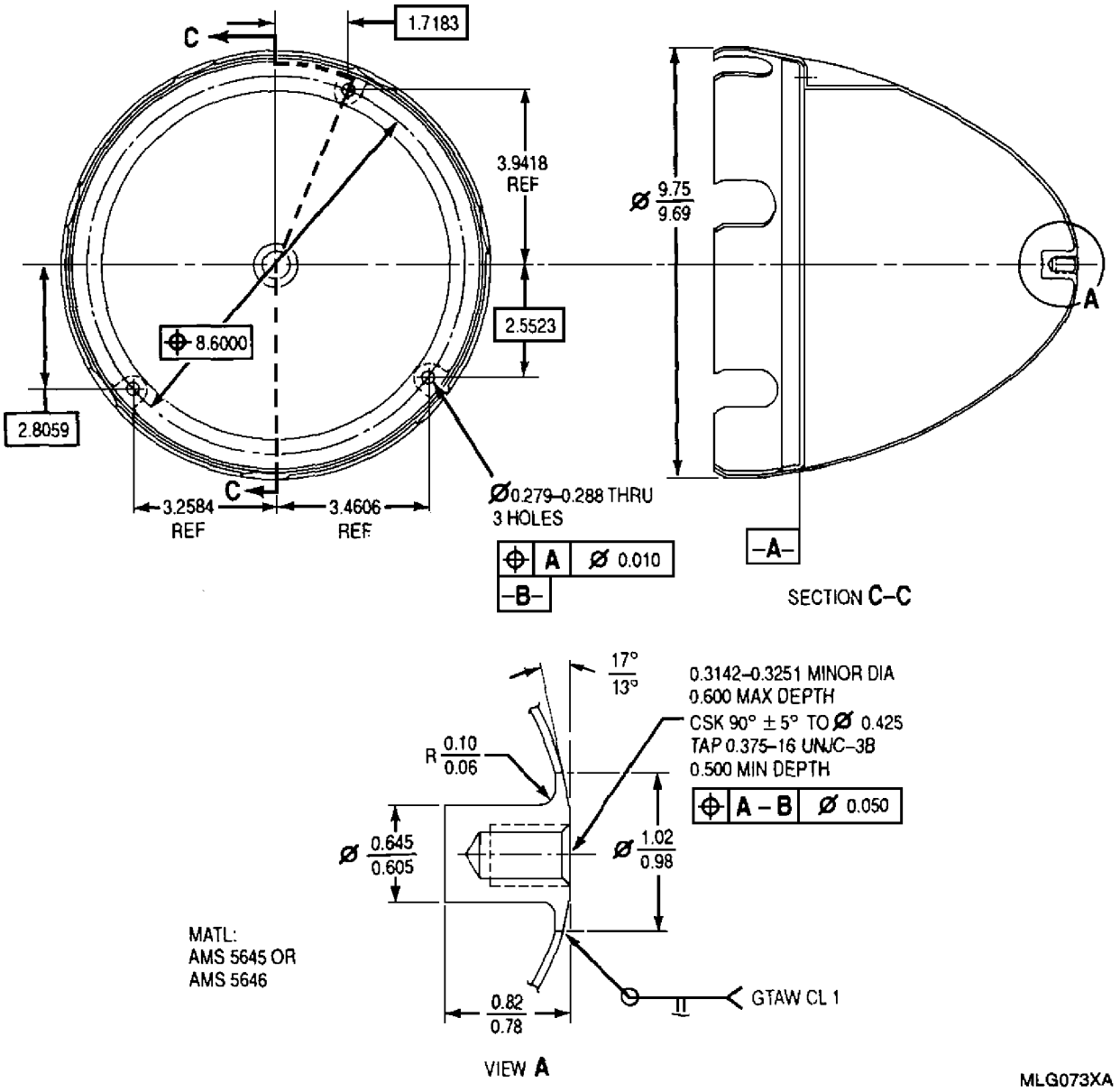

Figure 2. Inner Rear Exhaust Cone Assembly − Bolt Hole and Outside (Slotted) Diameter Repair

(1) Machine large outside diameter for a line fit with the hole in the rear cone.

(2) Lip width should be the thickness of the cone material.

c. Clean hole area in cone and replacement plug using MIL−T−81533 1,1,1 trichloroethane.

d. Install and weld replacement plug in place using GTAW method and AMS 5782 or AMS 5784 welding wire as follows:

(1) Locate plug in cone to true position requirement shown and tack weld four places.

(2) Weld plug all around.

(3) Dress weld bead flush to 0.040 in. above cone surface.

DEPOT MAINTENANCE

INSPECTION AND REPAIR

TURBINE BEARING OIL TUBES

Reference Material

Magnetic Particle and Fluorescent Penetrant Inspection − Procedures . . . . . WP 017 00
Pressure Test . . . . . AMS 2607

Alphabetical Index

Subject **Page No.**

Introduction 2
Turbine Bearing Oil Tubes 2
Inspection 2
Repair 2
Weld Repair 2

Record of Applicable Technical Directives

None

1. **INTRODUCTION.**

2. This work package (WP) provides the instructions for inspection and repair of the turbine bearing oil tubes used in the T56−A−427 turboprop engine.

3. **TURBINE BEARING OIL TUBES.**

4. TURBINE BEARING OIL TUBES − INSPECTION.

a. Inspect turbine bearing oil tubes. Refer to tables 1 and 2, and the following:

(1) Ensure that the center of the turbine front bearing pressure oil tube is within 0.240 − 0260 in. of the centerline of the 0.152 − 0.157 in. mounting holes (figure 1).

b. Refer to WP 017 00 for fluorescent penetrant inspection (FPI) procedures.

5. TURBINE BEARING OIL TUBES − REPAIR.

a. Repair turbine bearing oil tubes. Refer to disposition columns of tables 1 and 2.

b. Replace turbine bearing oil tubes not within serviceable limits after repair.

Table 1. Turbine Front Bearing Pressure and Scavenge Oil Tubes− Inspection and Repair

Condition	Serviceable Limits	Repairable Limits	Disposition
Dents, nicks or chafing.	Maximum depth of damage not to exceed 1/5 of tube diameter.	No breakthrough of tube wall.	Repair dents, nicks or chaffing. Refer to paragraph 6, this WP.
Cracks.	Not serviceable.	Cracks in welds only.	Repair cracks. Refer to paragraph 6, this WP.
Wear: Tube OD adjacent to O−ring seal groove.	0.487 in. minimum OD.	Not repairable.	Condemn unserviceable tube.
Tube front flange mounting holes.	0.177 in. maximum diameter.	Not repairable.	Condemn tube if not serviceable.
Pressure tube flow check.	See figure 2.	Flow is less than serviceable.	Clean oil jets Hole C and D, with a No. 51 size drill.

6. TURBINE BEARING OIL TUBES − WELD REPAIR.

Materials Required

Specification No./Part No.	**Nomenclature**
AMS 5782	Wire, welding
AMS 5783	Electrodes, welding covered
AMS 5784	Wire, welding alloy
AMS 5785	Electrode, welding covered

a. Weld repair pressure and scavenge tubes as follows:

(1) Weld repair dents, nicks, chafing, cracks or replace pressure tube tip or front flange, as applicable, using gas tungsten arc weld (GTAW) method with AMS 5782 or 5784 welding wire or metallic arc weld with an AMS 5783 or 5785 welding electrode.

(2) FPI tubes after weld repair per WP 017 00.

(3) Pressure test tubes per AMS 2607.

Table 2. Turbine Rear Bearing Oil Tube − Inspection and Repair

Condition	Serviceable Limits	Repairable Limits	Disposition
Tube leakage.	Not serviceable, except leaks through weld cracks at tube flange end.	Exceeds serviceable limits.	Pressure test tube with an air pressure of 100 psi while submerged in water. **NOTE** Be sure leak indications are not the result of poorly attached test adapters. Weld repair cracks per paragraph 6, this WP.

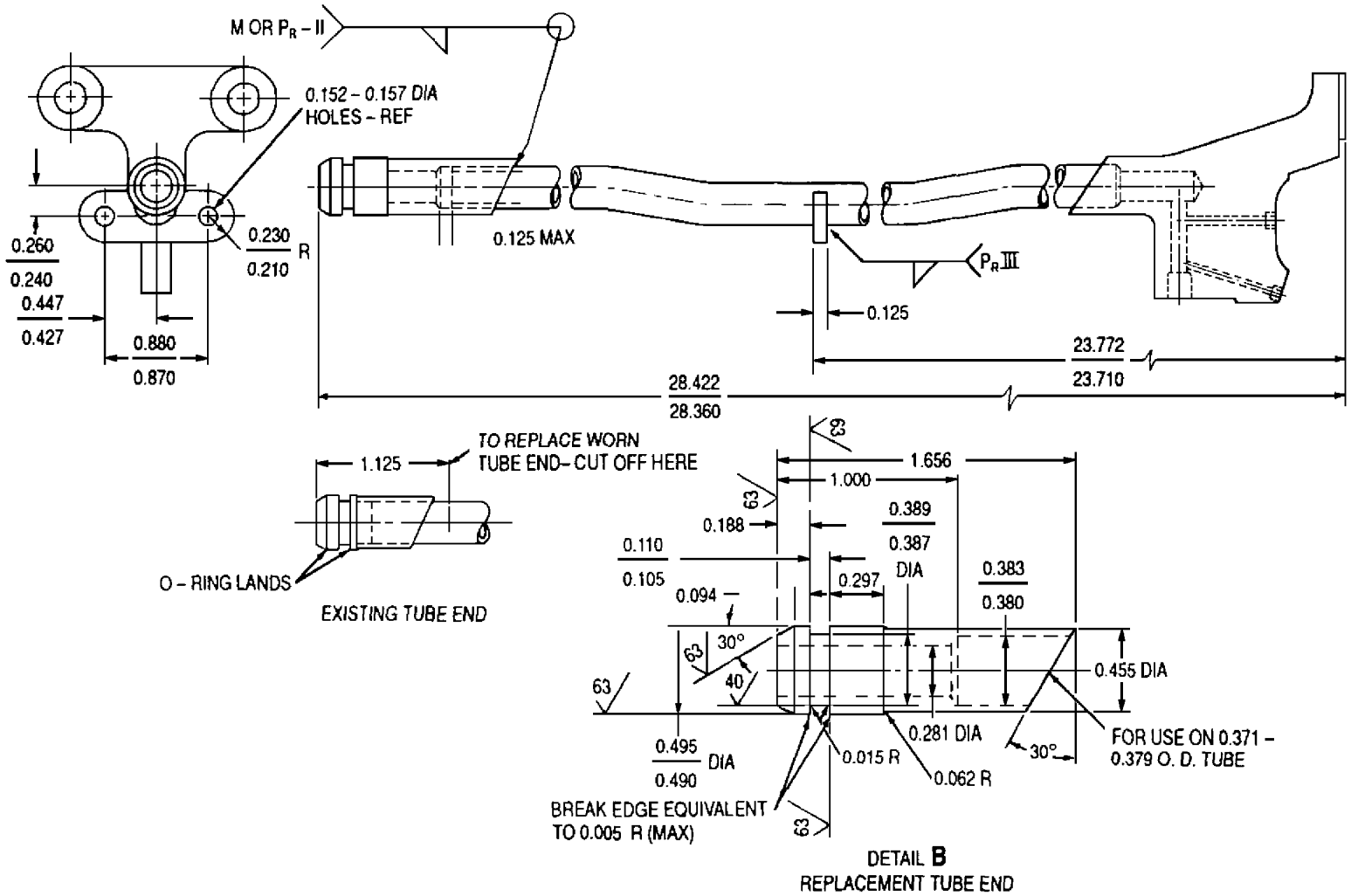

Figure 1. Turbine Front Bearing Pressure Oil Tube Assembly Rework

MLJ024XB

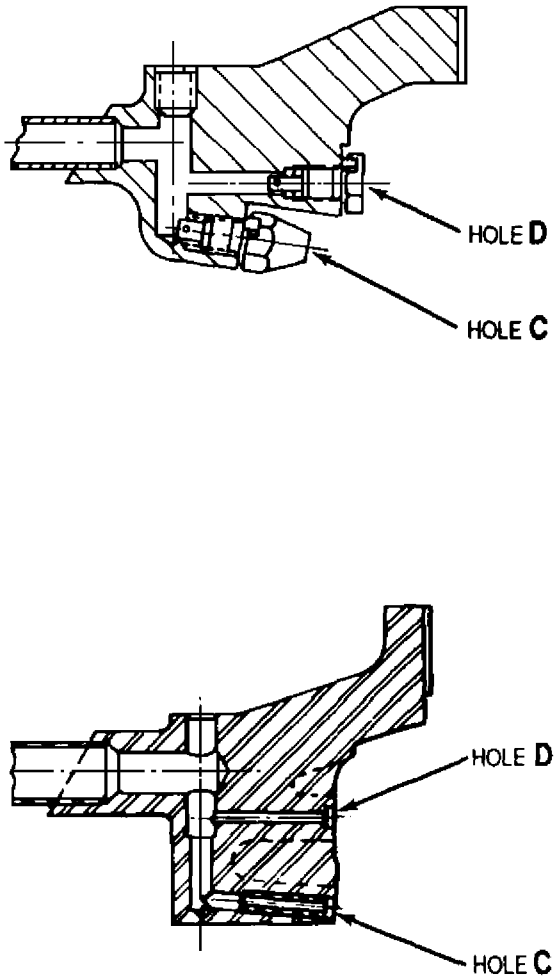

NOTE:

USE MIL−PRF−23699 OIL AT A TEMPERATURE OF 190 − 200°F (88 − 93°C) AND 50 PSI TO CHECK FLOW AS FOLLOWS:

HOLE **C**: MINIMUM FLOW OF 5.2 LB / MIN WHEN HOLE **D** IS BLOCKED

HOLE **D**: MINIMUM FLOW OF 5.2 LB / MIN WHEN HOLE **C** IS BLOCKED

Figure 2. Turbine Front Bearing Pressure Oil Tube Flow Chart

DEPOT MAINTENANCE

INSPECTION AND REPAIR

TURBINE REAR BEARING SEALS

Reference Material

Magnetic Particle and Fluorescent Penetrant Inspection – Procedures . . . . . WP 017 00
Plating and Surface Treatment of Parts . . . . . WP 018 00

Alphabetical Index

Subject **Page No.**

Introduction 2
Rear Turbine Sump Seal 2
Fretting Repair 3
Inspection 2
Oil Passage Cleaning and Inspection 3
Repair 2
Thread Repair 3

Record of Applicable Technical Directives

None

1. **INTRODUCTION.**

2. This work package (WP) provides the instructions for the inspection and repair of the turbine rear bearing seals used in the turbine on the T56-A-427 turboprop engine.

3. **REAR TURBINE SUMP SEAL.**

4. REAR TURBINE SUMP SEAL - INSPECTION.

Materials Required

Part No./Type Designation	Nomenclature
MIL-PRF-680, Type II	Solvent, dry cleaning

a. Clean sump seal as follows:

Dry Cleaning Solvent MIL-PRF-680, Type II **3**

(1) Clean rear turbine sump seal with MIL-PRF-680, Type II dry cleaning solvent.

b. Inspect as follows:

(1) FPI rear turbine sump seal per WP 017 00 method B.

(2) Reject seal if any linear indications are found.

(3) Inspect rear turbine sump seal. Refer to table 1.

5. REAR TURBINE SUMP SEAL - REPAIR.

a. Repair rear turbine sump seal. Refer to Disposition column, table 1.

b. Replace rear turbine sump seal not within serviceable limits after repair.

Table 1. Rear Turbine Sump Seal - Inspection and Repair

Condition	Serviceable Limits	Repairable Limits	Disposition
Dimensional check.	Figure 1.	Not serviceable.	No repair authorized at this time. Retain parts for future repair capability.
Pitting.	0.005 in. max depth. 0.005 in. min distance between pits.	Not repairable.	Condemn seal exceeding serviceable limits.
Aluminum-graphite coating wear.	Less than 3.331 in. diameter.	Greater than 3.331 in. diameter.	Comdemn seal exceeding serviceable limits.

Table 1. Rear Turbine Sump Seal − Inspection and Repair (contd)

Condition	Serviceable Limits	Repairable Limits	Disposition
Fretting on sealing Surface J.	Surface imperfections less than 0.001 in. in depth.	Surface imperfections 0.001 − 0.002 in. in depth.	Repair seal per paragraph 5, this WP.
Oil Passage:			
Burrs on threads.	Not serviceable.	Exceeds serviceable limits.	Repair threads per paragraph 4, this WP.
Foreign matter present.	Not serviceable.	Exceeds serviceable limits.	Clean foreign matter in oil passage per paragraph 6, this WP.

6. REAR TURBINE SUMP SEAL − THREAD REPAIR.

Support Equipment Required

Part No./Type Designation	Nomenclature
0.250−28 UNJF−3B	Tap
0.500−20 UNJF−3B	Tap

Materials Required

Specification No./Part No.	Nomenclature
TT−T−291	Mineral Spirits

a. Chase oil passage threads with 0.500−20 UNJF−3B tap to clean up threads.

b. Chase bolt holes with 0.250−28 UNJF−3B tap to clean up threads.

Paint Thinner TT−T−291 **8**

c. Clean threads with wire brush and TT−T−291 Mineral Spirits.

7. REAR TURBINE SUMP SEAL − FRETTING REPAIR.

Materials Required

Specification No./Part No.	Nomenclature
——	Sand paper, 600 grit

a. Polish out minor fretting wear with 600 grit sandpaper or stone in localized area.

8. REAR TURBINE SUMP SEAL − OIL PASSAGE CLEANING AND INSPECTION.

Materials Required

Specification No./Part No.	Nomenclature
MIL−B−23958, Type I	Brush, cleaning
TT−T−291	Mineral Spirits

Paint Thinner TT−T−291 **8**

a. Clean oil passage with wire brush and TT−T−291 Mineral Spirits.

b. Pressure test oil passage with shop air to 100 psig. No leaks permitted.

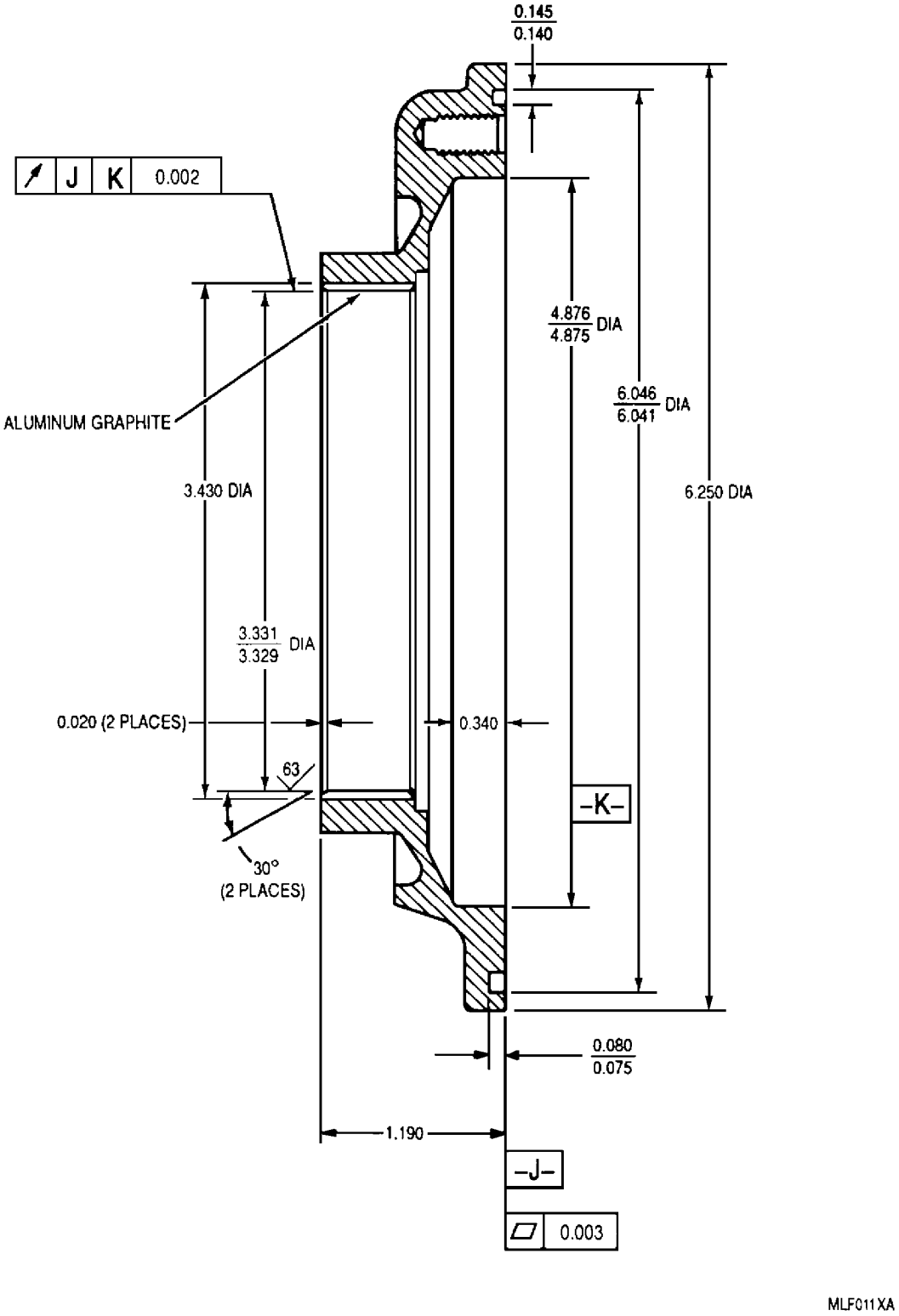

Figure 1. Rear Turbine Sump Seal Assembly

DEPOT MAINTENANCE

INSPECTION AND REPAIR

TURBINE REAR BEARING CAGE AND RETAINER ASSEMBLY

Reference Material

Plating and Surface Treatment of Parts . . . . . WP 018 00

Alphabetical Index

Subject **Page No.**

Introduction 2
Turbine Rear Bearing Cage 2
Bearing Pocket Repair (Surface B) 2
Diameter A and C Repair 2
Inspection 2
Repair 2
Surface D and E Repair 2
Turbine Rear Bearing Retaining Assembly 3
Inspection 3
Oil Passage Cleaning 4
Repair 3

Record of Applicable Technical Directives

None

1. **INTRODUCTION.**

2. This work package (WP) provides the instructions for inspection and repair of the turbine rear bearing cage and bearing retainer assembly used on the T56−A−427 turboprop engine.

3. **TURBINE REAR BEARING CAGE.**

4. TURBINE REAR BEARING CAGE − INSPECTION.

a. Inspect turbine rear bearing cage. Refer to table 1.

5. TURBINE REAR BEARING CAGE − REPAIR.

a. Repair turbine rear bearing cage. Refer to Disposition column, table 1.

b. Replace rear turbine bearing cage not within serviceable limits after repair.

Table 1. Turbine Rear Bearing Cage − Inspection and Repair

Condition	Serviceable Limits	Repairable Limits	Disposition
Depth of bearing pocket, Surface E to B.	0.8665 in. min depth.	Exceeds serviceable limits.	Repair per paragraph 6, this WP.
Wear on Surface B.	Not serviceable.	0.084 in. min flange thickness.	Repair per paragraph 6, this WP.
Wear on Surface D or E.	Not serviceable.	0.182 in. min flange thickness.	Repair per paragraph 7, this WP.
Wear on Diameter A.	4.873 in. min diameter.	Exceeds serviceable limits.	Repair per paragraph 8, this WP.
Wear on Diameter C.	4.331 in. max diameter.	Exceeds serviceable limits.	Repair per paragraph 8, this WP.

6. TURBINE REAR BEARING CAGE − BEARING POCKET REPAIR (SURFACE B).

a. Place Surfaces D against face of fixture and grind Surface B to clean up scored area. Flange thickness shall not be less than 0.084 in.

b. Surface B may be plated to maintain a bearing pocket depth of 0.8665 − 0.8675 in.

7. TURBINE REAR BEARING CAGE − SURFACE D AND E REPAIR.

NOTE

Flange must not be less than 0.177 in. when ground on one side or 0.167 in. if ground on both sides.

a. Grind Surfaces D and E to clean up scored area.

b. Electroless nickel or chrome plate per WP 018 00. Plating thickness shall not exceed 0.010 in. after finish grind.

c. Restore O−ring pocket to 0.042 − 0.047 in. depth.

8. TURBINE REAR BEARING CAGE − DIAMETER A AND C REPAIR. (figure 1)

NOTE

Machine Diameters A and F together to maintain concentricity.

a. Using Diameter F as a reference point for alignment, grind Diameters A and C to limits shown in figure 1.

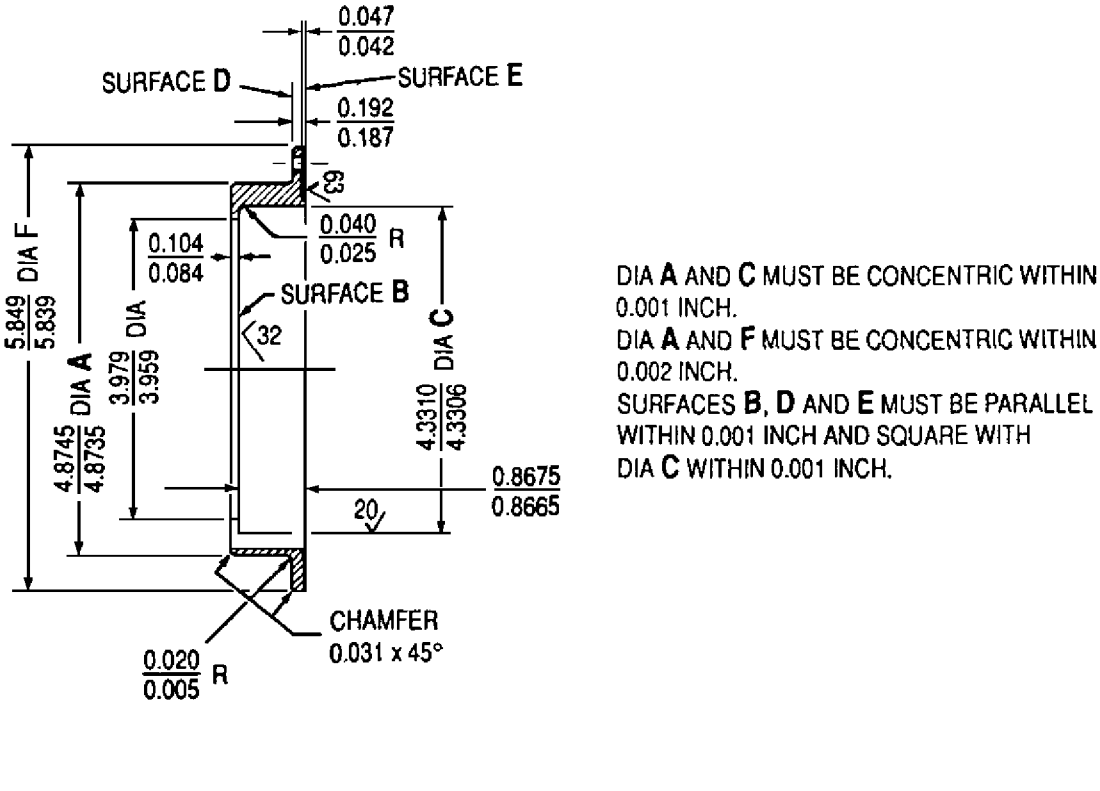

Figure 1. Turbine Rear Bearing Cage Repair

b. Electroless nickel or chrome plate Diameters A and C per WP 018 00. Plating thickness shall not exceed 0.005 in. after finish grind. Plating thickness less than 0.0005 in. will not require grinding if concentricity is within limits shown in figure 1.

c. Use Diameter F and Surface D as reference points to finish grind Diameters A and C to limits shown in figure 1.

9. **TURBINE REAR BEARING RETAINER ASSEMBLY.**

10. TURBINE REAR BEARING RETAINER ASSEMBLY − INSPECTION.

a. Inspect turbine rear bearing retainer assembly. Refer to table 2.

11. TURBINE REAR BEARING RETAINER ASSEMBLY − REPAIR.

a. Repair turbine rear bearing retainer assembly. Refer to Disposition column, table 2.

Table 2. Turbine Rear Bearing Cage Retainer Assembly − Inspection and Repair

Condition	Serviceable Limits	Repairable Limits	Disposition
Fretting wear on diameter which mates with rear bearing outer ring.	Any fretting that can be polished out.	Exceeds serviceable limits.	Condemn part exceeding serviceable limits.

Table 2. Turbine Rear Bearing Cage Retainer Assembly − Inspection and Repair (contd)

Condition	Serviceable Limits	Repairable Limits	Disposition
	Lubricating Oil, MIL−PRF−23699	**2**	
Oil jet flow check.	Minimum flow of 5.0 lb/min of MIL−PRF−23699 oil at 50 psi and 190−200°F (88−93°C).	Flow is less than serviceable limits.	Clean oil passage per paragraph 12, this WP.

12. TURBINE REAR BEARING RETAINER ASSEMBLY − OIL PASSAGE CLEANING.

Materials Required

Specification No./Part No.	**Nomenclature**
TT−T−291	Spirits, Mineral

CAUTION

Drill shall be used in a hand reamer handle or a similar manually−used holder. Use care while running drill into the oil passage.

a. Use a No. 31 (0.120 in. dia) drill to clean the 0.125 in. diameter passage.

b. Use a No. 51 (0.067 in. dia) drill to clean the 0.070 in. diameter passage.

Paint Thinner TT−T−291 **8**

c. Use TT−T−291 mineral spirits to clean out oil passages.

DEPOT MAINTENANCE

INSPECTION AND REPAIR

TURBINE ROTOR WHEELS
TURBINE VENT TUBE
TURBINE VENT TUBE SEAL RINGS

Reference Material

Magnetic Particle and Fluorescent Penetrant Inspection − Procedures . . . . . WP 017 00
Plating and Surface Treatment of Parts . . . . . WP 018 00

Alphabetical Index

Subject **Page No.**

Introduction 2
Turbine Rotor Wheels 2
Diameter M Repair (First−Stage) 4
Diameter M Repair (First−Stage Alternate Procedure) 4
Inspection 2
Journal Repair (First− and Fourth−Stage) 3
Repair 2
Turbine Vent Tube 5
Inspection 5
Repair 5
Turbine Vent Tube Seal Rings 5
Inspection 5
Repair 5

Record of Applicable Technical Directives

None

1. **INTRODUCTION.**

2. This work package (WP) provides the instructions for inspection and repair of the turbine rotor wheels, vent tube, and vent tube seal rings used in the turbine on the T56−A−427 turboprop engine.

3. **TURBINE ROTOR WHEELS.**

4. TURBINE ROTOR WHEELS − INSPECTION.

a. Inspect turbine rotor wheels. Refer to table 1.

b. Refer to WP 017 00 for fluorescent penetrant inspection (FPI) procedure.

5. TURBINE ROTOR WHEELS − REPAIR.

a. Repair turbine rotor wheels. Refer to Disposition Column, table 1.

b. Replace turbine rotor wheels not within serviceable limits after repair.

Table 1. Turbine Rotor Wheels − Inspection and Repair

Condition	Serviceable Limits	Repairable Limits	Disposition
Cracks in wheel serrations.	Not serviceable.	Not repairable.	Check for cracks with 40−power magnification. Condemn wheel exceeding serviceable limits.
First− and Fourth−Stage wheel seal and bearing journals.	Journal damage must not exceed 0.015 in. in depth or 10% of journal area.	Exceeds serviceable limits.	Repair journals per paragraph 6, this WP.
Flaked plating on bearing journals (First− and Fourth−Stage wheels).	Plating may be flaked on front side of First−Stage turbine wheel journal and the aft side of Fourth−Stage turbine wheel journal completely around the ends not to exceed 0.250 in. and a depth of 0.040 in.	Exceeds serviceable limits.	Metallize journals per paragraph 6, this WP.
Chipped spray coating on Diameter M of First−Stage wheel. (figure 1)	Chipped area shall not extend across the pilot diameter. A total of 75% of diameter must be coated.	Exceeds serviceable limits.	Repair damaged pilot diameter per paragraph 7, this WP.
Tie bolt spacer wear (First−Stage wheel).	1.066 in. max ID and no abrupt diametral change.	Exceeds serviceable limits.	Replace spacer. Assembly dimensional limits for turbine−to−compressor tie bolt spacer to First−Stage wheel are 0.003T − 0.000 in. Press spacer to bottom. After spacer installation, shaft OD opposite the spacer must be within 2.5589 − 2.5586 in. Machine spacer ID, if necessary, to obtain a 1.062 − 1.061 in. diameter.

Table 1. Turbine Rotor Wheels − Inspection and Repair (contd)

Condition	Serviceable Limits	Repairable Limits	Disposition
Vent tube sealing sleeve wear (First−Stage wheel).	1.632 in. max ID and no abrupt diametral change.	Exceeds serviceable limits.	Remove sleeve and press new sleeve in wheel. Sealing sleeve to wheel fit shall be 0.003T − 0.001T in. Sleeve to bottom against tie bolt spacer. Sleeve ID shall be 1.630 − 1.632 in. Machine if necessary after installing.
Anti−rotation pin slot wear. (figure 2)	0.003 in. max circumferential slot enlargement.	Exceeds serviceable limits.	Blend damaged area to remove metal buildup and sharp edges. Machine three new slots. New slots must be at least 2.00 in. from original slots.

6. TURBINE ROTOR WHEELS − JOURNAL REPAIR (First− and Fourth−Stage).

Materials Required

Specification No./Part No.	Nomenclature
Sprabond or Metco 405	Bonding medium (CAGE 39918)
Metcoloy No. 2	Wire, coating alloy (CAGE 39918)

a. Previously reworked journals, proceed as follows:

(1) Grind or machine First− and Fourth−Stage wheel bearing journals until parent metal is exposed.

(2) Continue grinding or machining not to exceed 0.002 in. additional thickness to remove interface where diffusion of parent metal and previous metal spray occurred.

b. Non−reworked journals, proceed as follows:

NOTE

Metal spray repair of First− and Fourth−Stage journal shoulders and a 0.120 in. area next to shoulders is optional if these surfaces are not worn.

Sprabond or Metco 405 and Metcoloy No. 2 are the bonding medium and coating alloy required for journal repair.

(1) Use metal spray coating method of WP 018 00 with the following exceptions:

(a) Grit blast pressure shall be 90−115 psig.

(b) Preheat wheel for 30 minutes at 200 − 300°F (93.33 − 148.89°C).

NOTE

Bonding medium shall be applied to a thickness of 0.001 − 0.003 in.

Metallizing metal must not exceed a thickness of 0.030 in. after grinding.

(c) Spray coat journal starting at the thrust face and progressing across the journal.

c. Grind bearing journals to the following dimensions:

(1) First−Stage: 2.5589 − 2.5586 in.

(2) Fourth−Stage: 2.3621 − 2.3618 in.

d. Grind seal journals to the following dimensions:

(1) First−Stage: 2.9100 − 2.9095 in.

(2) Fourth−Stage: 2.3618 − 2.3621 in.

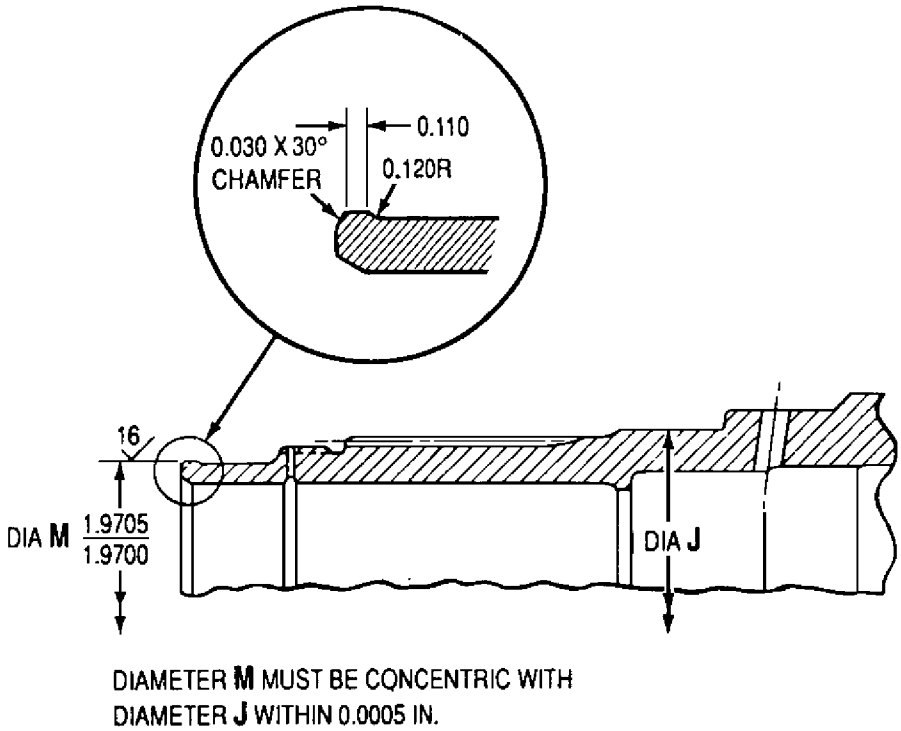

MKG015XD

Figure 1. Turbine First−Stage Wheel Repair

7. TURBINE ROTOR WHEELS − DIAMETER M REPAIR (First−Stage).

Materials Required

Specification No./Part No.	Nomenclature
Sprabond or Metco 405	Bonding medium (CAGE 39918)
Metcoloy No. 2	Wire, coating alloy (CAGE 39918)

a. Grind or machine Diameter M until parent metal is exposed. (figure 1)

b. Use metal spray coating procedure of WP 018 00 and the following coating materials:

(1) Bonding medium, Sprabond, to a thickness of 0.001 − 0.003 in.

(2) Coating alloy, Metcoloy No. 2 to a thickness required for finishing.

NOTE

Metal coating must not exceed a thickness of 0.010 in. after grinding.

(3) Grind to diameter shown in figure 1.

8. TURBINE ROTOR WHEELS − DIAMETER M REPAIR. (First−Stage Alternate Procedure)

Materials Required

Specification No./Part No.	Nomenclature
AMS 5788	Coating, alloy No. 6 rod
MIL−T−81533	Trichloroethane, 1,1,1
No. 163E	Coating, alloy (CAGE 71543)

a. Machine grind Diameter M until parent metal is exposed.

Trichloroethane MIL−T−81533 **10**

b. Degrease turbine wheel using MIL−T−81533 trichloroethane.

c. Build up Diameter M with No. 163E alloy coating or Base Satellite No. 6 rod (AMS 5788) and inert gas welding process.

d. Apply sufficient material for finish grinding to dimensions shown in figure 1.

9. **TURBINE VENT TUBE.**

10. TURBINE VENT TUBE − INSPECTION.

a. Inspect turbine vent tube. Refer to table 2.

b. Refer to WP 017 00 for fluorescent penetrant inspection (FPI) procedures.

11. TURBINE VENT TUBE − REPAIR.

a. Repair turbine vent tube. Refer to Disposition column, table 2.

b. Replace turbine vent tube not within serviceable limits after repair.

Table 2. Turbine Vent Tube − Inspection and Repair

Condition	Serviceable Limits	Repairable Limits	Disposition
FPI vent tube.	No cracks acceptable.	Not repairable.	Condemn tube exceeding serviceable limits.
Inspect ring grooves and ends for fretting wear.	Not serviceable.	Remove raised metal.	Remove raised metal by stoning on all groove faces and ends. Condemn part if not able to repair by light stoning.

12. **TURBINE VENT TUBE SEAL RINGS.**

13. TURBINE VENT TUBE SEAL RINGS − INSPECTION.

a. Inspect turbine vent tube seal rings. Refer to table 3.

14. TURBINE VENT TUBE SEAL RINGS − REPAIR.

a. Repair turbine vent tube seal rings. Refer to Disposition column, table 3.

b. Replace turbine vent tube seal rings not within serviceable limits after repair.

Table 3. Turbine Vent Tube Seal Rings − Inspection and Repair

Condition	Serviceable Limits	Repairable Limits	Disposition
Inspect for uneven wear or fretting on edges and OD.	Not serviceable.	Remove fretting or uneven wear.	Remove raised metal by stoning on edges and OD. Condemn part if not able to repair by light stoning.

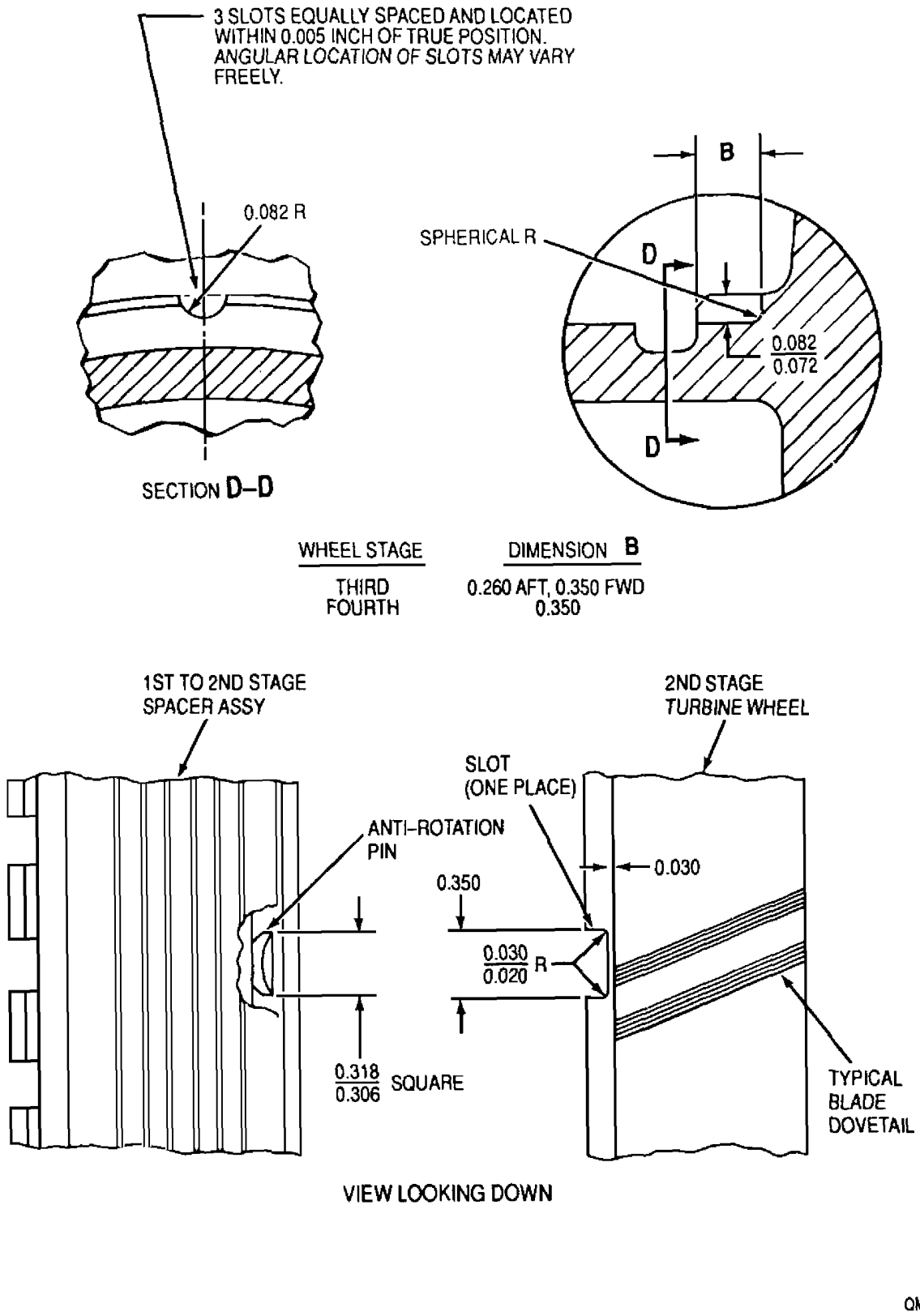

Figure 2. Turbine Wheel Anti−Rotation Pin Slot Locations

DEPOT MAINTENANCE

INSPECTION AND REPAIR

TURBINE ROTOR CLAMP BOLT AND CLAMP BOLT NUT

Reference Material

Magnetic Particle and Fluorescent Penetrant Inspection − Procedures . . . . . WP 017 00
Plating and Surface Treatment of Parts . . . . . WP 018 00
Plating, Nickel Electroless, Low Phosphorus . . . . . AMS 2405
Plating, Chromium, Hard Deposit . . . . . AMS 2406

Alphabetical Index

Subject **Page No.**

Introduction 2
Turbine Rotor Clamp Bolt 2
Inspection 2
Repair 2
Turbine Rotor Clamp Bolt Nut 3
Inspection 3
Repair 3

Record of Applicable Technical Directives

None

1. **INTRODUCTION.**

2. This work package (WP) provides the instructions for inspection and repair of the turbine rotor clamp bolts and clamp bolt nuts used in the turbine on the T56−A−427 turboprop engine.

3. **TURBINE ROTOR CLAMP BOLT.**

4. TURBINE ROTOR CLAMP BOLT − INSPECTION.

a. Inspect turbine rotor clamp bolt. Refer to table 1.

b. Refer to WP 017 00 for Fluorescent Penetrant Inspection (FPI) procedures.

5. TURBINE ROTOR CLAMP BOLT − REPAIR.

a. Repair turbine rotor clamp bolt. Refer to Disposition column, table 1.

b. Replace turbine rotor clamp bolts not within serviceable limit after repair.

Table 1. Turbine Rotor Clamp Bolts − Inspection and Repair

Condition	Serviceable Limits	Repairable Limits	Disposition
FPI bolt closely, examining threaded area.	No cracks acceptable.	Not Repairable.	Condemn bolt exceeding serviceable limits.
Fretting under bolt head.	Not serviceable.	Reject bolt if damage cannot be removed with light stoning.	Remove damage with light stoning only.
Bolt threads damage.	Not serviceable.	Reject bolt if damage cannot be removed with light stoning.	Remove damage with light stoning only.
Bolt mutes.	Minimum diameter of mutes shall be 0.389 in. (figure 1)	Exceeds serviceable limits.	Strip plating and replate using hard chrome per AMS 2406 or electroless nickel per AMS 2405. Maximum plating thickness shall be 0.005 in. Finish machine to dimensions shown in figure 1.

6. **TURBINE ROTOR CLAMP BOLT NUT.**

7. TURBINE ROTOR CLAMP BOLT NUT − INSPECTION.

a. Inspect turbine rotor clamp bolt nut. Refer to table 2.

8. TURBINE ROTOR CLAM BOLT NUT − REPAIR.

a. Repair turbine rotor clamp bolt nut. Refer to Disposition column, table 2.

Table 2. Turbine Rotor Clamp Bolt Nuts − Inspection and Repair

Condition	Serviceable Limits	Repairable Limits	Disposition
Cracks.	Not serviceable.	Not repairable.	Condemn part exceeding serviceable limits.
Thread damage.	Not serviceable.	Any thread damage.	Chase threads to remove damage. Blend nicks and burrs. Strip and resilver plate per WP 018 00 using AMS 2411 to a thickness of 0.0002 to 0.0006 inch.

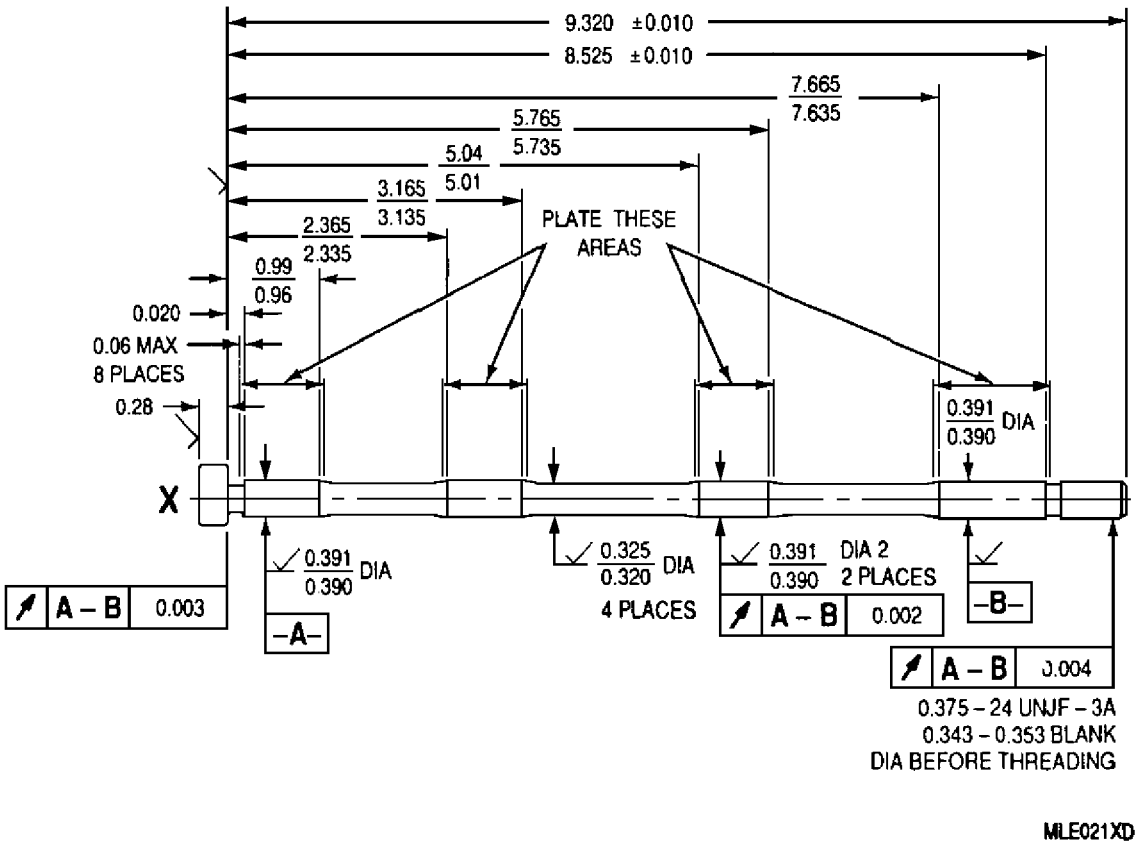

Figure 1. Turbine Rotor Clamp Bolt Repair

DEPOT MAINTENANCE

INSPECTION AND REPAIR

FIRST-STAGE TURBINE BLADE ASSEMBLY
SECOND-, THIRD-, AND FOURTH-STAGE TURBINE BLADES

Reference Material

Cleaning and Corrosion Treatment – Standard Practices . . . . . WP 008 00
Magnetic Particle and Fluorescent Penetrant Inspection – Procedures . . . . . WP 017 00
Plating and Surface Treatment of Parts . . . . . WP 018 00
Turbine Rotor Assembly – Assembly . . . . . WP 030 00

Alphabetical Index

Subject **Page No.**

Introduction 2
First- through Fourth-Stage Turbine Blades 2
Cleaning 2
Inspection 2
Repair 2

Record of Applicable Technical Directives

None

1. **INTRODUCTION.**

2. This work package (WP) provides the instructions for inspection and repair of the First-Stage turbine blade assembly and Second- through Fourth-Stage turbine blades installed in the turbine rotor assembly used in the T56-A-427 turboprop engine.

3. **FIRST- THROUGH FOURTH - STAGE TURBINE BLADES.**

NOTE

Condemn all blades within the effected turbine wheel, immediately down stream from any vane with "burn through". Vane "burn through" is defined as the complete melting or disintegration of the vane airfoil until there is no physical material bond between the remaining segments of the detail vane. This applies to all turbine stages (1-4).

4. FIRST- THROUGH FOURTH-STAGE TURBINE BLADES - CLEANING. Clean turbine blades before inspection. Refer to WP 008 00 for cleaning procedure.

5. FIRST- THROUGH FOURTH-STAGE TURBINE BLADES - INSPECTION.

Support Equipment Required

Part No./Type Designation	Nomenclature
——	Glass, magnifying (3X min)

a. Inspect turbine blades. Refer to table 1.

b. Use magnifying glass (3X min) when inspecting coating on First and Second Stage blades for serviceable limits (table 2).

c. Refer to WP 017 00 for fluorescent penetrant inspection (FPI) procedure.

6. FIRST-THROUGH FOURTH-STAGE TURBINE BLADES - REPAIR.

a. Repair turbine blades. Refer to Disposition column, table 1.

b. Replace turbine blades not within serviceable limits after repair.

Table 1. First-Stage Turbine Blade Assembly and Second-, Third-, and Fourth-Stage Blades - Inspection and Repair

Condition	Serviceable Limits	Repairable Limits	Disposition
Broken blade assembly (First-Stage).	Not serviceable.	Not repairable.	Condemn blade assembly.
Broken blade (Second- through Fourth-Stages).	Not serviceable.	Not repairable.	Condemn blade.
FPI indications (First-Stage).	Not serviceable.	Not repairable.	Condemn blade assembly. Condemn all blades in wheel assembly if ten or more blade assemblies have cracks.
FPI indications (Second- through Fourth-Stages).	Not serviceable.	Not repairable.	Condemn blade.
Obstructed cooling air passages in trailing edge (First-Stage).	Not serviceable.	Not repairable.	Clean air passages.
Obstructed cooling air holes in impingement tube (First-Stage).	Not serviceable.	Not repairable.	Condemn blade.

Table 1. First−Stage Turbine Blade Assembly and Second−, Third−, and Fourth−Stage Blades − Inspection and Repair (contd)

Condition	Serviceable Limits	Repairable Limits	Disposition
Over temperature (exceeded 1706°F (930°C)).	Not serviceable.	Not serviceable.	No repair authorized at this time. Retain parts for future repair capability.
Heat scale or deposits.	Area is smooth to touch after cleaning. No bleedback of fluorescent penetrant inspection. Inspect for bleed−back by cleaning the area with soft eraser (pencil type) and reapplying ZP−4 powder by dusting.	See Disposition.	First−, Second−, and Third−Stage blades− Strip coating from blades per WP 018 00. FPI blades per WP 017 00. Condemn blades showing FPI indications. Recoat blades per WP 018 00 not showing FPI indications.
Burns or deformation.	Not distorted, badly pitted, scaled, eroded or showing untwisting neckdown in airfoil section.	Not repairable.	Condemn blades exceeding serviceable limits.
Coating on all areas of First−Stage blade assembly and Second− and Third−Stage blades (figure 1).	Refer to figures 2 and 3 and table 2 for First− through Third−Stage limits. No coating loss to expose base material allowed.	See Disposition.	Heat tint First−, Second−, and Third−Stage blades per WP 008 00 for loss of coating. Strip and recoat blades if any coating is missing per WP 018 00.
Nicks and dents in leading and trailing edges:			
In coating only (First− through Third−Stages).	Not serviceable.	Refer to figure 4 for limits.	Heat tint First−, Second−, and Third−Stage blades per WP 008 00 for loss of coating. Strip and recoat blades if any coating is damaged or missing per WP 018 00.
To parent metal (First− through Third−Stages).	Not serviceable.	Refer to figure 4 for limits.	Strip coating from blades per WP 018 00. Blend damage to form smooth contour with airfoil contour. Hold material removal to minimum. Final polish in longitudinal direction to 40 RMS surface texture. Recoat blades per WP 018 00.
Fourth−Stage blade.	Not serviceable.	Refer to figure 4 for limits.	Blend damage to form smooth contour with airfoil contour. Hold material removal to minimum. Final polish in longitudinal direction to 40 RMS surface texture.

Table 1. First−Stage Turbine Blade Assembly and Second−, Third−, and Fourth−Stage Blades − Inspection and Repair (contd)

Condition	Serviceable Limits	Repairable Limits	Disposition
Minute damage in lower 1/3 of airfoil and fillet radius of First− through Third−Stage blades.	Small dents within pit limits of table 2. No scratches allowed.	See Disposition.	If minute damage exceeds serviceable limits, strip blades per WP 018 00. Condemn blades with any damage in lower 1/3 of airfoil and fillet radius. If serviceable, recoat blades per WP 018 00.
Minute damage in lower 1/3 of airfoil and fillet radius of Fourth−Stage blades.	Not serviceable.	Minute scratches or small dents.	Lightly stone or polish only if dimensions are basically unchanged.
Nicks and dents in surface areas of airfoil:			
First− through Third−Stage blades.	Small dents and nicks within pit limits of table 2. Combined total of nicks and dents shall not exceed total allowable pit limits.	Refer to figure 4 and 5 for limits.	Strip coating from blades per WP 018 00. Blend sharp edges only. No repair in lower 1/3 of airfoil and fillet radius. Recoat blades per WP 018 00.
Fourth−Stage blades.	Not serviceable.	Refer to figure 4 and 5 for limits.	Blend sharp edges only. No repair in lower 1/3 of airfoil and fillet radius.
Tip rub damage (First−Stage).	No loss of coating to expose base material on tip and in pocket. No leading and trailing edge damage. No loss of tip overspray on airfoil surface.	Refer to figures 1 and 7 for limits.	Blend tip damage (figure 7) and heat lint blades per WP 008 00 for loss of coating. Strip and recoat blades if any coating is missing per WP 018 00.
Shroud Z notch hard face surfaces wear (Second−, Third−, and Fourth−Stages):			
Wear.	Not serviceable.	Not serviceable.	No repair authorized at this time. Retain parts for future repair capability.

Table 1. First−Stage Turbine Blade Assembly and Second−, Third−, and Fourth−Stage Blades − Inspection and Repair (contd)

Condition	Serviceable Limits	Repairable Limits	Disposition
Erosion of blade shroud seal knives on Second−, Third−, and Fourth−Stage blades. Refer to figure 8.	Area A: (all) 0.100 in. maximum.	Not repairable.	Condemn blades exceeding serviceable limits.
	Area B: (Second−Stage) complete hard face coating on each knife edge and within acceptable radius limit per WP 030 00.	Not repairable.	Condemn blades exceeding serviceable limits.
	Area B: (Third− and Fourth−Stages) knife edges may be worn to a sharp edge provided each knife edge is within acceptable radius limit per WP 030 00.	Not repairable.	Condemn blades exceeding serviceable limits.
NOTE Early stages of sulfidation is evidenced by a rough or crusty appearance of the blade airfoil. Advanced stages of this condition is evidenced by splitting, delamination, separating, flaking or loss of material.			
Corrosion (sulfidation) of airfoil (First− and Second−Stages).	Not serviceable.	Not repairable.	Condemn blade assembly/blade.
Oxidation or erosion:			
Leading and trailing edges (First− through Third−Stages).	No loss of coating to expose base material.	Refer to figures 2, 3, 4, and 7 for limits.	Strip coating from blades per WP 018 00. Blend surface irregularities. Be sure blend radii are smooth between concave and convex sides. No transverse scratches or raised edges. Maintain linear taper from platform to shroud/tip. Recoat blades per WP 018 00.
Leading and trailing edges (Fourth−Stage).	Not serviceable.	Refer to figure 4 for limits.	Blend surface irregularities. Be sure blend radii are smooth between convexand concave sides. No transverse scratches or raised edges. Maintain linear taper from platform to shroud.

Table 1. First−Stage Turbine Blade Assembly and Second−, Third−, and Fourth−Stage Blades − Inspection and Repair (contd)

Condition	Serviceable Limits	Repairable Limits	Disposition
Oxidation or erosion (contd)			
Airfoils (First− through Third−Stage blades).	No loss of coating to expose base material.	Refer to figure 5 and 6 for limits.	Strip coating from blades per WP 018 00. Blend surface irregularities. No transverse scratches or raised edges. Recoat blades per WP 018 00.
Airfoil (Fourth−Stage blades).	Not serviceable.	Not repairable.	Condemn blades.
Flaking (First− through Third−Stages)	Light and scattered provided no area exceeds 1/4in. diameter, not located in lower 1/3 of airfoil and base material not exposed.	See Disposition.	If otherwise serviceable,heat tint blades per WP 008 00 for loss of coating. Strip and recoat if any coating is missing. Refer to WP 018 00.
Crazing or grain boundary oxidation.	No bleedback of fluorescent penetrant. Inspect for bleedback by cleaning the area with soft eraser (pencil type) and applying ZP−4 powder by dusting.	Not repairable.	Condemn blades exceeding serviceable limits.
Bow in blade.	0.060 in. max deviation at point of max deflection.	Not repairable.	Condemn blades exceeding serviceable limits.
Porosity (porous surface impressions) in airfoils and leading and trailing edges (First− through Third−Stages).	Individual impressions not exceeding pit limits of table 2.	Refer to figures 4, 5, and 6 for limits.	Strip coating from blades per WP 018 00. Remove indications by blending within applicable limits. Recoat blades per WP 018 00.

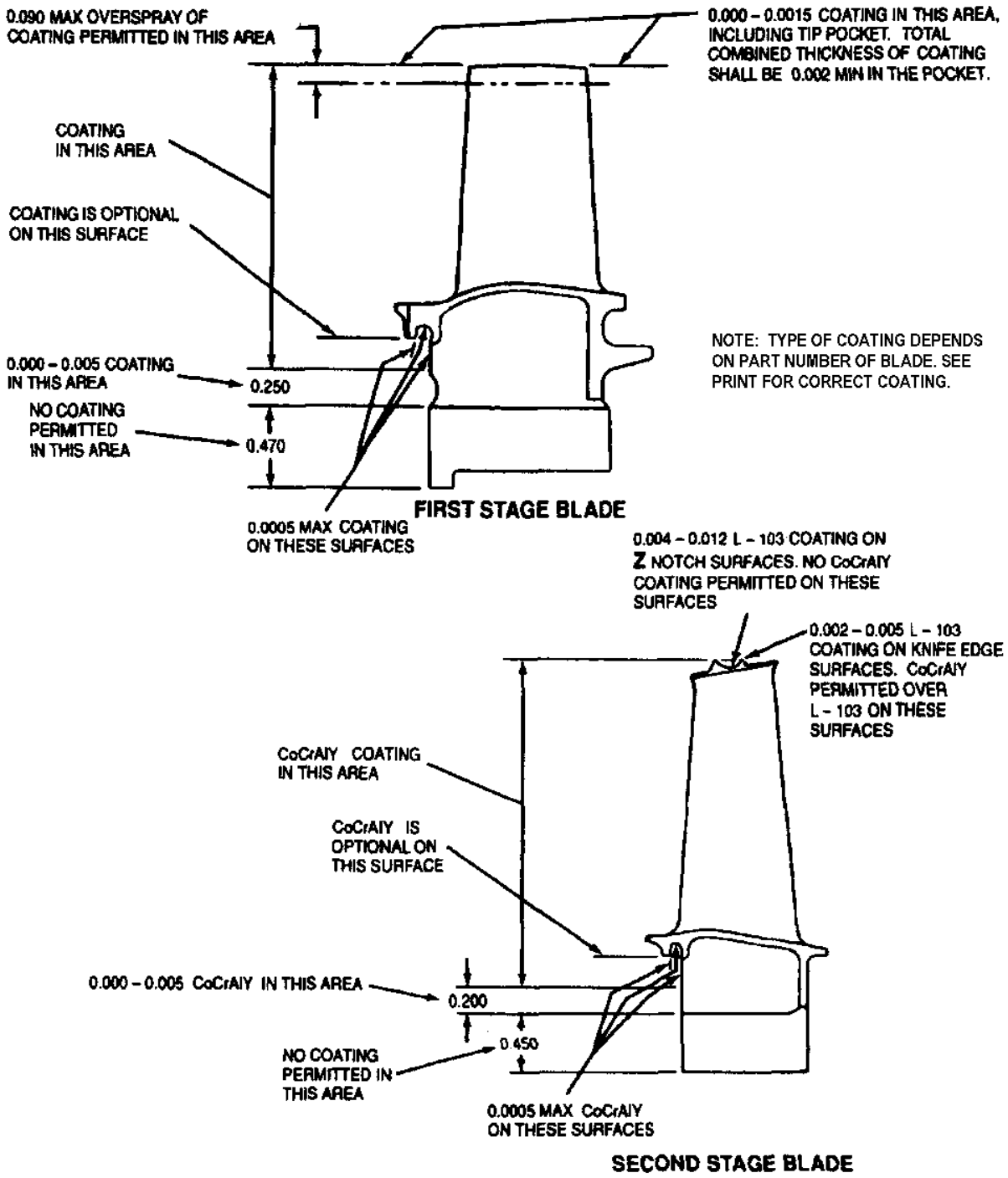

Figure 1. Turbine Blade Coating Limits (Sheet 1 of 2)

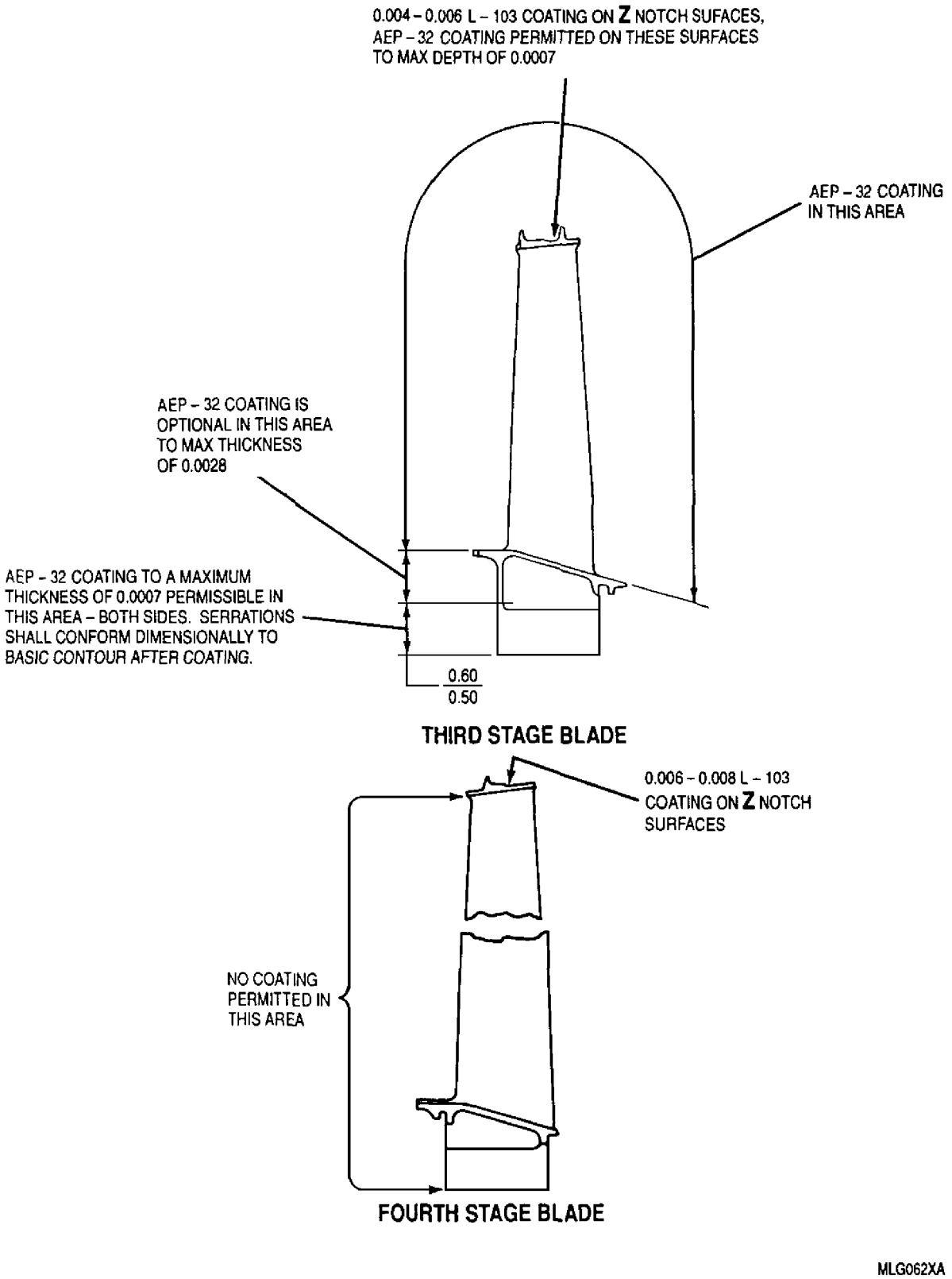

Figure 1. Turbine Blade Coating Limits (Sheet 2)

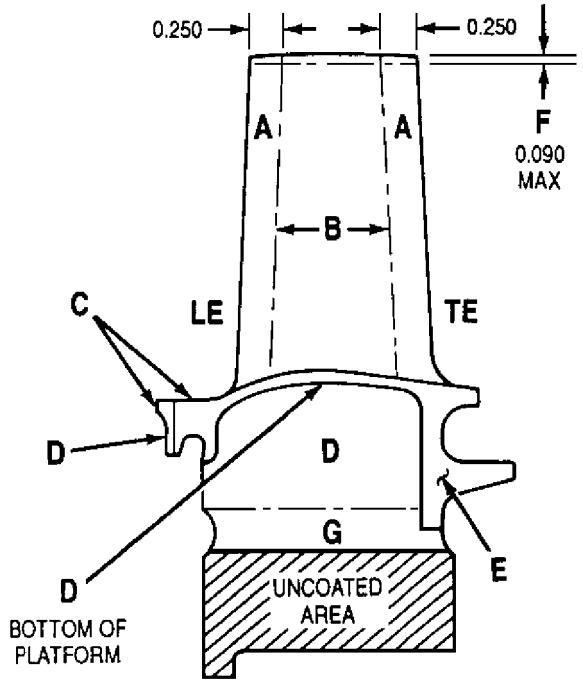

NOTES:

1. AREAS **A** AND **B** EXTEND THROUGH FILLET RADIUS TO TANGENCY POINT WITH PLATFORM
2. AREA **C** INCLUDES TOP AND UNMACHINED EDGES OF PLATFORM
3. AREA **D** INCLUDES STALK SURFACES AND BOTTOM OF PLATFORM
4. AREA **E** INCLUDES MACHINED EDGES OF PLATFORM
5. AREA **F** IS OVERSPRAY AREA OF LCO − 17K COATING (REFERENCE)
6. AREA **G** IS 0.000 − 0.005 INCH THICKNESS TAPER OF COATING (REFERENCE)

1ST STAGE

MLGD56XD

Figure 2. First−Stage Turbine Blade Assembly Coating − Visual Inspection Areas

Table 2. First− and Second−Stage Turbine Blade Coating − Serviceable Limits (Refer to Figures 2 and 3)

Condition	Area	Maximum Number	Maximum Size (in.)	Minimum Separation (In.)
Covered Spits (Limits for exposed spits same as chipping)	All	Any Amount	0.010	3/8
	A (LE)	2	0.020	3/8
	A (TE)	2	0.020	3/8
	B	2 per side	0.020	3/8
	C	2	0.030	1/4
	D	Any Amount	0.030	1/4
	E	None	—	—
Pits (individual)	All	Any Amount	0.010	3/8
	A (LE)	4	0.020	3/8
	A (TE)	4	0.020	3/8
	B	6 per side	0.020	3/8
	C	Any Amount	0.030	1/4
	D	Any Amount	0.030	1/8
	E	Any Amount	0.030	1/8
Chipping, Spalling, and Exposed Spits	A	None	—	—
	B	None	—	—
	C	None	—	—
	D	2 per side	0.030	1/4
	E	None	—	—

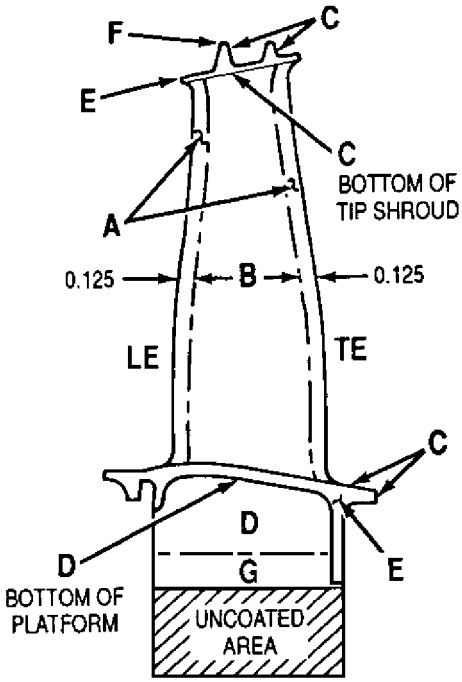

NOTES:

1. AREAS **A** AND **B** EXTEND THROUGH FILLET RADII TO TANGENCY POINT WITH PLATFORM AND TIP SHROUD.
2. AREA **C** INCLUDES BOTTOM OF TIP SHROUD, TOP AND UNMACHINED EDGES OF TIP SHROUD AND PLATFORM
3. AREA **D** INCLUDES STALK SURFACES AND BOTTOM OF PLATFORM
4. AREA **E** INCLUDES MACHINED EDGES OF PLATFORM AND TIP SHROUD.
5. AREA **F** IS AREA OF PERMISSIBLE OVERSPRAY OF CoCrAlY OVER L − 103 COATING (REFERENCE)
6. AREA **G** IS 0.000 − 0.005 INCH THICKNESS TAPER OF CoCrAlY COATING (REFERENCE)

2ND AND THIRD STAGES

MLG057XD

Figure 3. First−Stage Turbine Blade Assembly Coating − Visual Inspection Areas

BLADE STAGE	DIM **A** MAX DEPTH LEADING EDGE	DIM **A** MAX DEPTH TRAILING EDGE	DIM **B** TOTAL MAX DEPTH BLENDS IN SAME PLANE
1ST 2ND 3RD 4TH	NO REPAIR AUTHORIZED AT THIS TIME. RETAIN PARTS FOR FUTURE REPAIR CAPABILITY.		

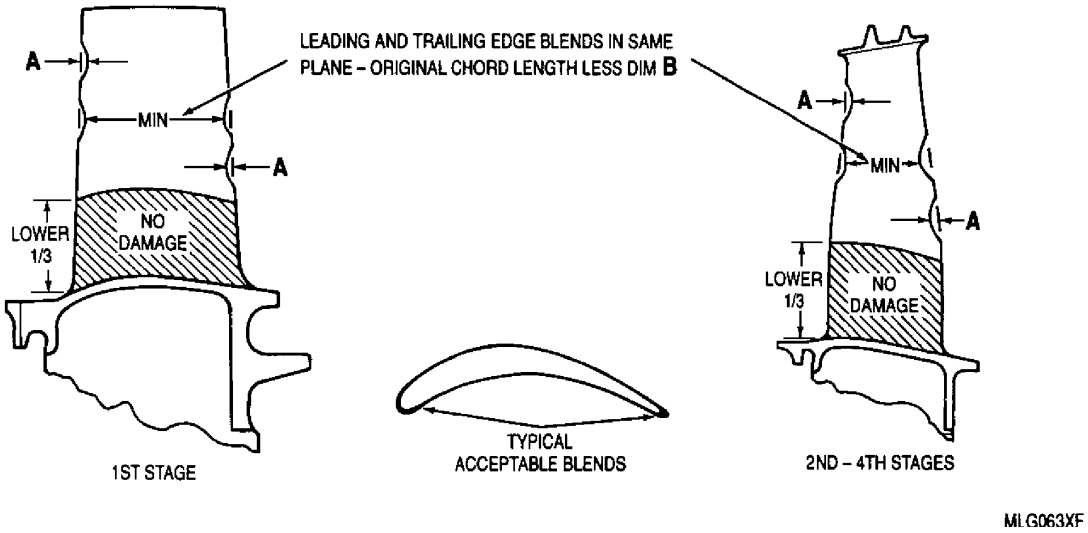

Figure 4. Turbine Blade Leading and Trailing Edges − Blend Limits

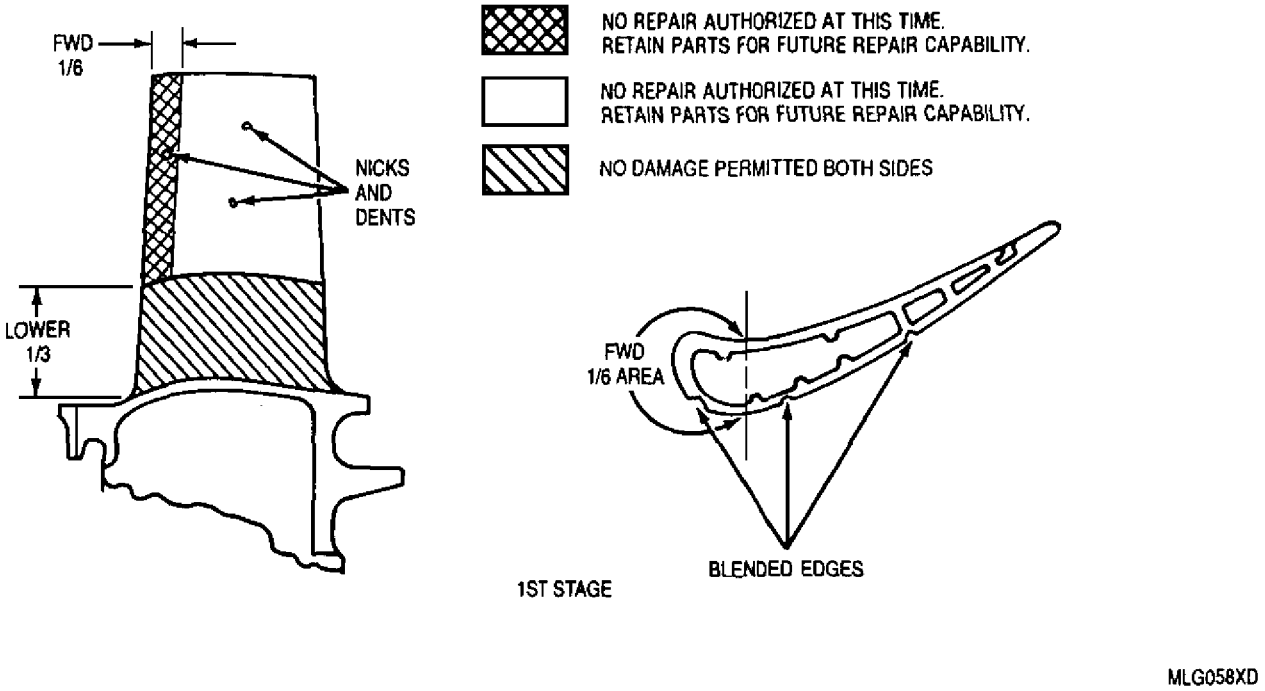

Figure 5. First−Stage Turbine Blade Airfoil − Surface Blend Limits

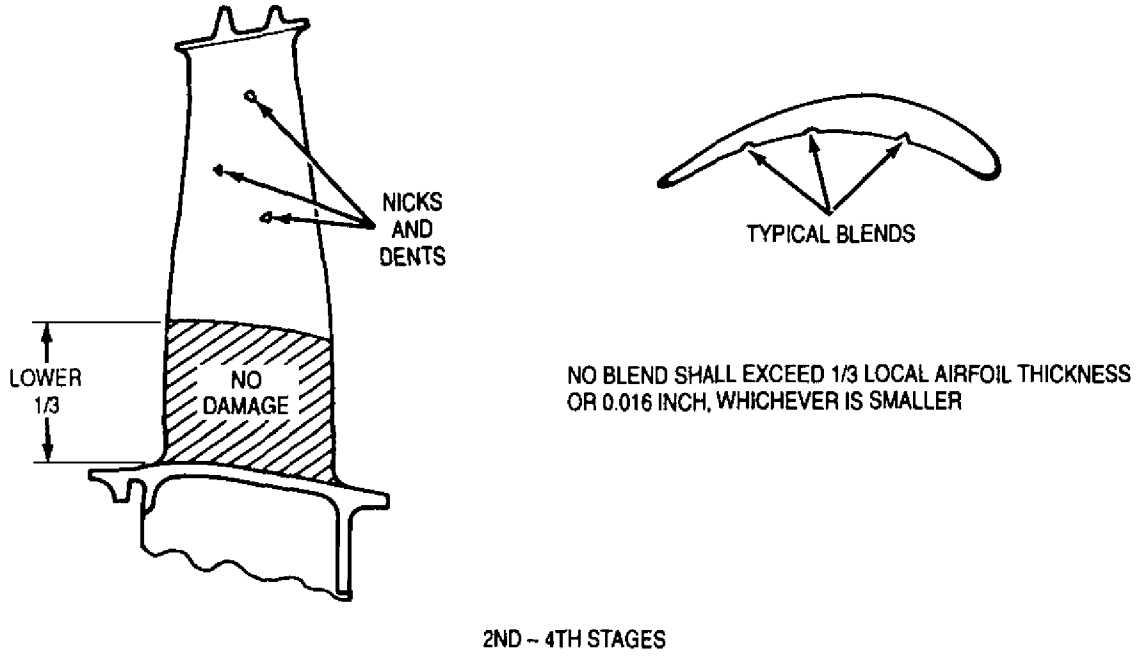

Figure 6. Second − Through Fourth−Stage Airfoils − Surface Blend Limits

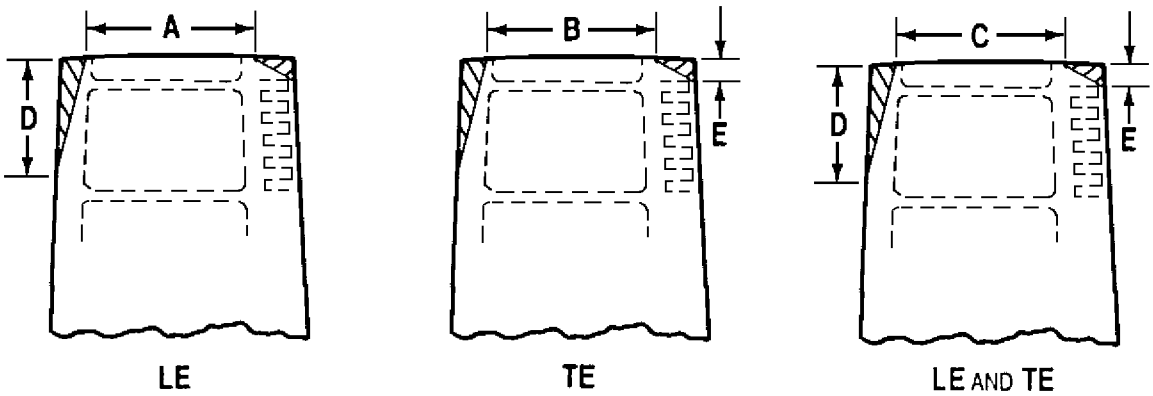

CONDITION	DIM AFTER REPAIR (INCH)
A B C D E	NO REPAIR AUTHORIZED AT THIS TIME. RETAIN PARTS FOR FUTURE REPAIR CAPABILITY.

CAUTION

NO BREAK THROUGH INTO TIP POCKET OR COOLING AIR PASSAGES PERMITTED AFTER REPAIR

1ST STAGE

MLG060XD

Figure 7. First−Stage Turbine Blade Tip Leading and Trailing Edges − Blend Limits

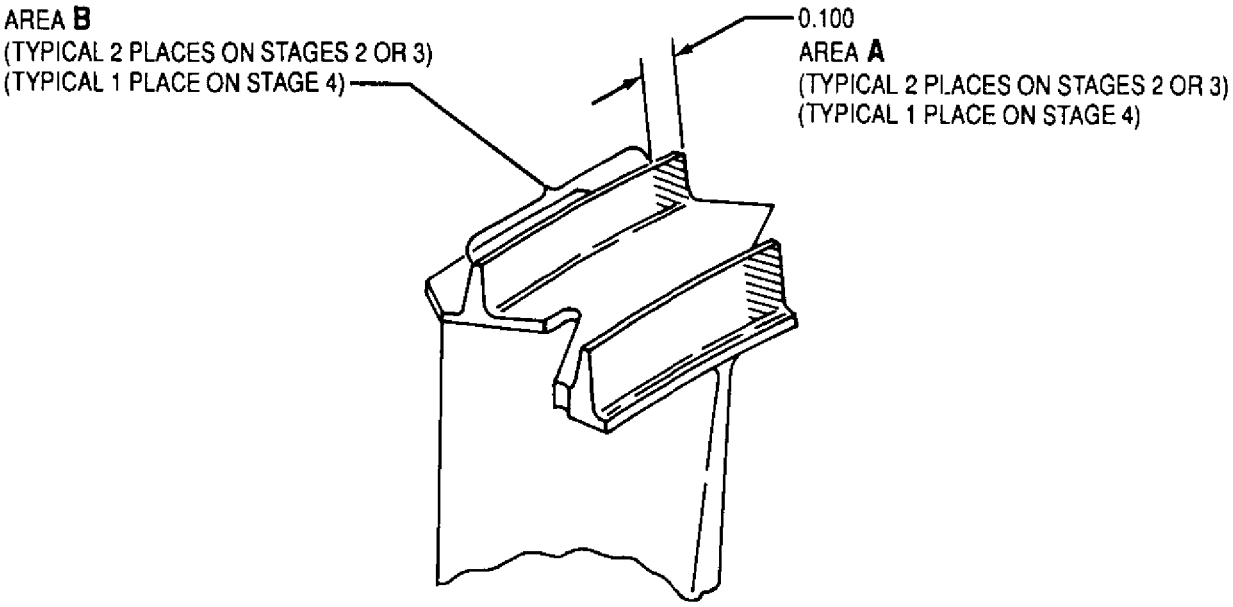

QMG021XD

Figure 8. Second−, Third−, and Fourth−Stage Turbine Blade Shroud − Seal Knives Erosion

DEPOT MAINTENANCE

INSPECTION AND REPAIR

TURBINE COUPLING SHAFT ASSEMBLY

Reference Material

Magnetic Particle and Fluorescent Penetrant Inspection − Procedures . . . . . WP 017 00
Plating and Surface Treatment of Parts . . . . . WP 018 00

Alphabetical Index

Subject **Page No.**

Introduction 2
Turbine Coupling Shaft Assembly 2
Adapter Repair 6
Assembly 4
Balance Procedure 6
Disassembly 3
Inspection 2
Repair 2

Record of Applicable Technical Directives

None

1. **INTRODUCTION.**

2. This work package (WP) provides the instructions for inspection and repair of the turbine coupling shaft used in the T56−A−427 turboprop engine.

3. **TURBINE COUPLING SHAFT ASSEMBLY.**

4. TURBINE COUPLING SHAFT ASSEMBLY − INSPECTION.

a. Inspect coupling shaft. Refer to table 1.

b. Refer to WP 017 00 for magnetic particle inspection (MPI) procedures.

5. TURBINE COUPLING SHAFT ASSEMBLY − REPAIR.

a. Repair turbine coupling shaft. Refer to Disposition column, table 1.

NOTE

Disassemble coupling shaft only when damaged, since disassembly requires the use of special tools and rebalancing.

Turbine coupling shaft assemblies that do not require disassembly shall be check balanced per paragraph 19, this WP.

b. Replace coupling shaft not within serviceable limits after repair.

Table 1. Turbine Coupling Shaft − Inspection and Repair

Condition	Serviceable Limits	Repairable Limits	Disposition
MPI indications. a. Open indications in radii if showing fatigue−type progression. b. Indications extending into root corners of spline teeth. c. Open indication breaking into grooves, slots or holes, if showing appreciable depth.	Light indications scattered and parallel to the material flow lines.	Not repairable.	Condemn part exceeding serviceable limits.
Wear:			
Splines or adapter nuts.	No abnormal wear.	Exceeds serviceable limits.	Disassemble shaft assembly per paragraph 6, this WP. Repair is limited to light stoning and polishing of splines and replacement of parts. Reassemble and balance assembly per paragraphs 7 and 9, this WP.
Coupling spacer.	1.006 in. max ID.	Not repairable.	Replace spacer per paragraph 6, this WP.
Front adapter spherical diameter.	1.5355 in. min diameter.	Less than serviceable limit.	Replace adapter per paragraph 8, this WP.

Table 1. Turbine Coupling Shaft − Inspection and Repair (contd)

Condition	Serviceable Limits	Repairable Limits	Disposition
Rear spacer ID.	1.9712 in. max.	1.9752 in. max.	Remove spacer per paragraph 6, this WP. Machine spacer ID to remove wear pattern. Chrome plate spacer ID per WP 018 00. Plating thickness shall be 0.0005 − 0.005 in. after finish grinding. Install spacer per paragraph 7, this WP and machine spacer per figure 11.
Spline burrs.	Not serviceable.	Any burr.	Remove burrs by light stoning or polishing.
Chipped plating on shaft OD.	Chips less than 1/2 in. long and 1/4 in. wide, if blended and touched up with AMS 3132 resin, per WP 018 00. Temperature cure cycle shall be replaced with a 15−minute air dry cure.	Exceeds serviceable limits.	Strip plating and apply nickel plate, AMS 2403, to shaft OD per WP 018 00. Plating to begin 1.93 − 2.18 in. from each end of shaft with a thickness of 0.001 − 0.0015 in.
Dynamic (force−couple) balance.	Within 0.05 oz in.	Exceeds serviceable limits.	Balance per paragraph 9, this WP and figure 11.

6. TURBINE COUPLING SHAFT ASSEMBLY − DISASSEMBLY.

Support Equipment Required

Part No./Type Designation	Nomenclature
6796263	Fixture, holding
6796264	Wrench
6796267	Drift, spacer assembly
6796272	Holder
6797661	Jig, drill, lockpin
6797662	Puller, adapter
6797663	Holder, coupling shaft

a. Disassemble the coupling shaft assembly as follows:

(1) Place coupling shaft assembly (1, figure 1) in 6796272 holder (figure 2).

(2) Install 6797661 lockpin drill jig (figure 3) on coupling shaft assembly and drill out lockpins (6, figure 1) which secure nuts (5) at both ends of shaft.

(3) Place the coupling shaft assembly in 6796263 holding fixture and remove the nuts (5) using 6796264 coupling shaft wrench (figure 4).

(4) Remove the coupling shaft assembly from the holding fixture and place in 6796272 holder.

(5) Install 6797662 adapter puller (figure 5). Pull adapter (3, figure 1) and spacer (4) from shaft.

(6) Place coupling shaft assembly in 6797663 shaft holder and install in an arbor press. Shear rolled edge of the spacer (2, figure 1) with 6796267 spacer drift (figure 6). Remove the spacer.

(7) Replace coupling shaft tie bolt spacer (2, figure 1).

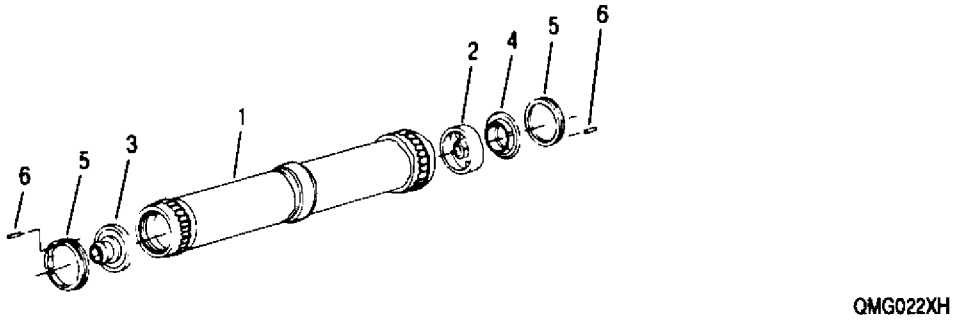

1. Shaft Assembly
2. Spacer (tie bolt)
3. Adapter
4. Spacer
5. Nut, external thread
6. Headless Lockpin

Figure 1. Turbine Shaft Coupling Assembly

7. TURBINE COUPLING SHAFT ASSEMBLY − ASSEMBLY.

Support Equipment Required

Part No./Type Designation	Nomenclature
6796263	Fixture, holding
6796264	Wrench
6796268	Holder, spacer assembly
6796269	Drift, adapter
6796270	Drift, bolt spacer roll
6796272	Holder
6797661	Jig, drill, lockpin
6797663	Holder, coupling shaft

Materials Required

Specification No./Part No.	Nomenclature
NS165	Anti−seize Compound (Never Seez)
——	Gloves, insulated
——	Ice, dry

NOTE

Coupling shaft−to−tie bolt spacer (2) fit shall be 0.004T − 0.000 in.

Spacer ID must be within 1.004 − 1.0024 in. after installation.

a. Place tie bolt spacer (2, Figure 1) in 6796268 spacer holder (figure 7).

b. Install coupling shaft over tie bolt spacer and holder.

c. Install assembly in arbor press and roll edge of the spacer (4, figure 1) using 6796270 drift (figure 8).

Dry Ice, BB−C−104 55

NOTE

Coupling shaft−to−adapter (3, figure 1) and spacer (4) fit shall be 0.002T − 0.000 in.

d. Freeze the adapter and spacer using dry ice.

e. Place coupling shaft in 6797663 holder and use 6796269 shaft adapter drift to press adapter and spacer in place (figure 9).

f. Place coupling shaft in 6796263 holding fixture.

Anti−seize Compound (Never Seez) NS165 31

g. Apply Anti−seize Compound (Never Seez) NS165 lubricant to both nut threads (5, figure 1) and install nuts.

h. Torque nuts with 6796264 coupling shaft wrench to 150 − 200 lb ft. (QA)

i. Place coupling shaft assembly in 6796272 coupling shaft holder (figure 2).

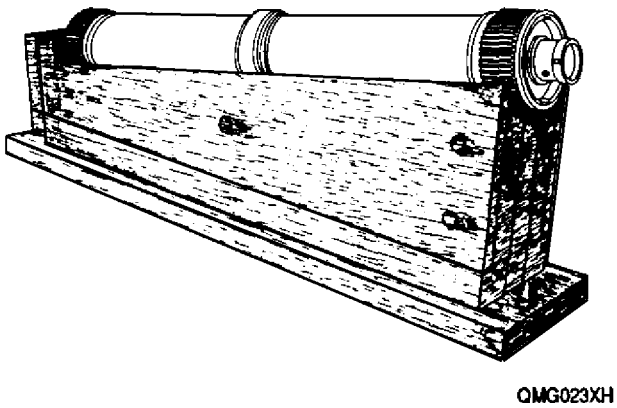

Figure 2. Placing Coupling Shaft Assembly in 6796272 Holder

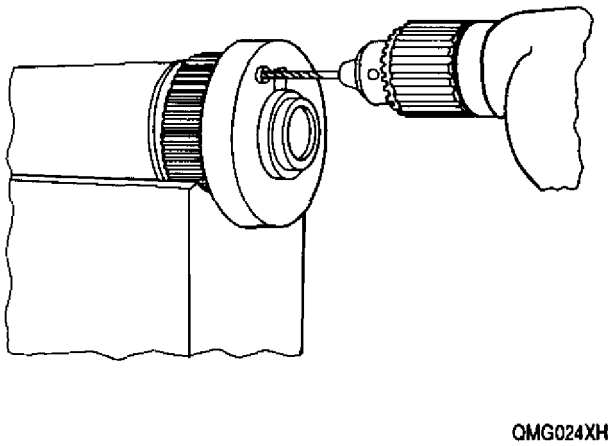

Figure 3. Installing 6797661 Lockpin Drill Jig on Coupling Shaft Assembly

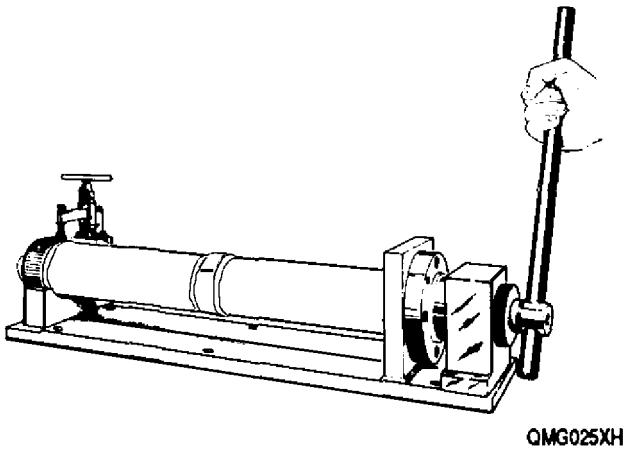

Figure 4. Removing Nuts with the 6796264 Coupling Shaft Wrench

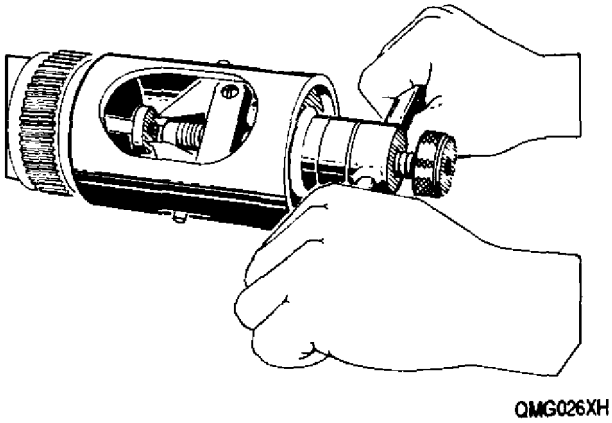

Figure 5. Pulling Coupling Adapter and Spacer from the Shaft Using 6797662 Puller

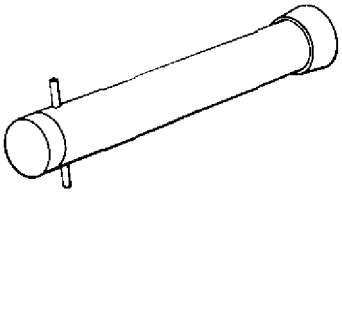

Figure 6. 6796267 Turbine Coupling Shaft Spacer Disassembly Drift

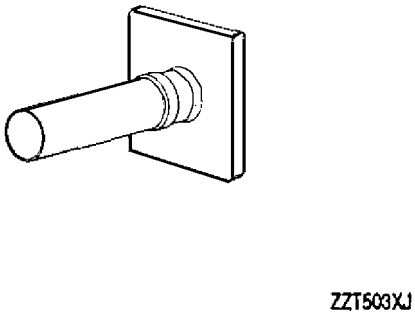

Figure 7. 6796268 Turbine Coupling Shaft Spacer Holder

CAUTION

Do not use old lockpin holes.

j. Install 6797661 jig on end of coupling shaft assembly and drill a new hole through the shaft and nut (5, figure 1) on each end at least 1/8 in. from existing hole.

k. Select lockpins (6) for a drive fit and stake.

8. TURBINE COUPLING SHAFT ASSEMBLY − ADAPTER REPAIR.

a. Locate adapter against outer end face of flange, Surface A, and establish zero concentricity with Diameter B (figure 10).

NOTE

Plating optional in spherical diameter slots if dimensions after plating are met.

b. Machine spherical diameter as necessary to remove wear but not in excess of 0.003 in. deep.

c. MPI for cracks per WP 017 00. No cracks are acceptable.

d. Chrome plate spherical diameter per WP 018 00 and finish to 1.5365 − 1.5360 in. Spherical diameter must be concentric with Diameter B within 0.001 in. FIR.

9. TURBINE COUPLING SHAFT ASSEMBLY − BALANCE PROCEDURE.

Support Equipment Required

Part No./Type Designation	Nomenclature
6798183	Machine, balance, static and dynamic

Materials Required

Specification No./Part No.	Nomenclature
MIL−PRF−3043	Resin coating (AMS 3132)

NOTE

Turbine coupling shaft assemblies that have been disassembled must be balanced.

a. Install coupling shaft assembly in a 6798183 static and dynamic balance machine.

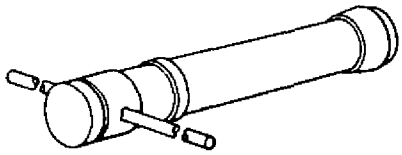

ZZT509XJ

Figure 8. 6796270 Turbine Coupling Shaft Bolt Spacer Roll Drift

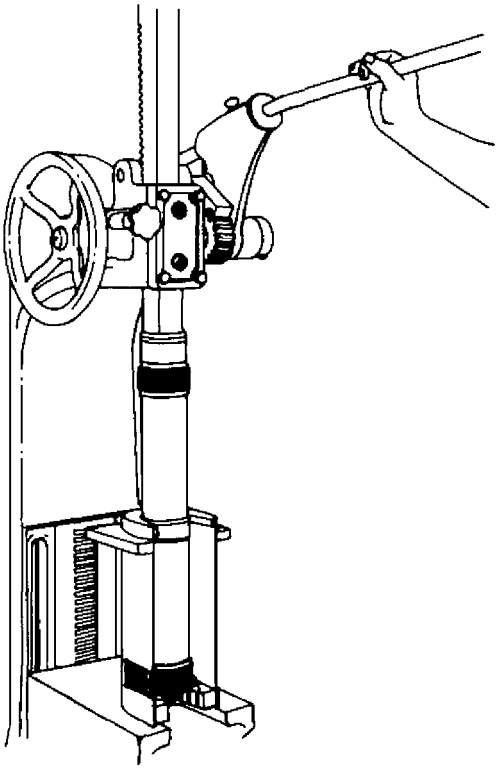

MLG051XG

Figure 9. Pressing Adapter and Spacer in Place

b. Dynamic (force couple) balance the assembly (figure 11).

Resin Coating Thinner MIL−PRF−3043 39

c. After balancing, spot the stock removal areas with MIL−PRF−3043 resin coating per WP 018 00 except a 15−minute air dry cure will replace the temperature cure cycle.

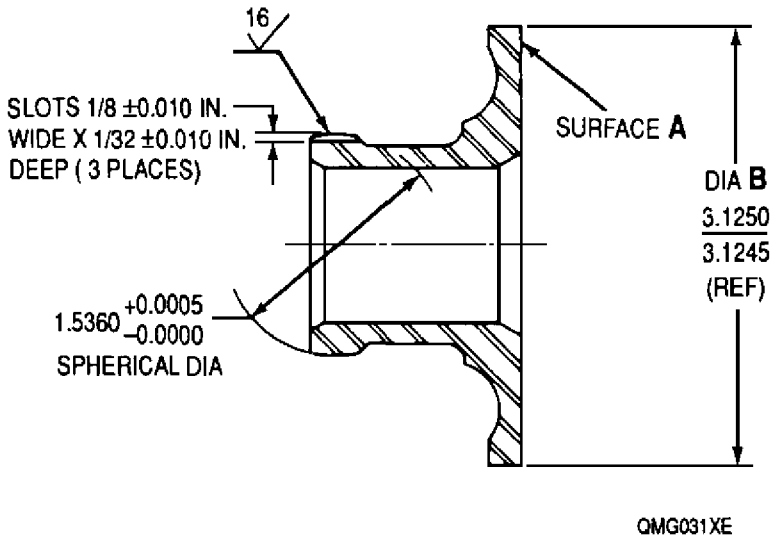

Figure 10. Turbine Coupling Shaft Front Adapter Repair

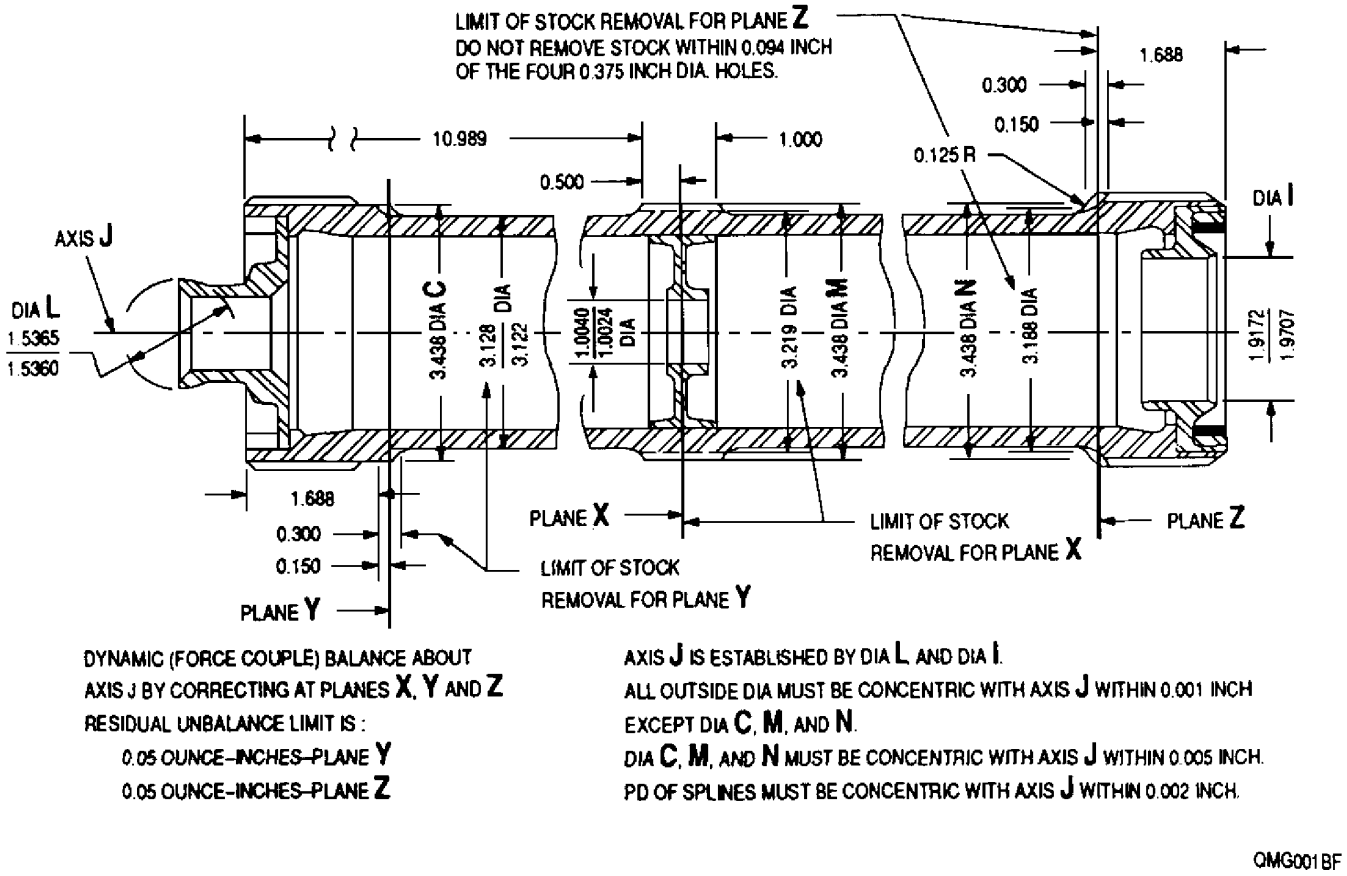

Figure 11. Turbine Coupling Shaft Assembly Machining and Balancing Details

DEPOT MAINTENANCE

INSPECTION AND REPAIR

TURBINE−TO−COMPRESSOR TIE BOLT

Reference Material

Magnetic Particle and Fluorescent Penetrant Inspection − Procedures . . . . . WP 017 00
Plating and Surface Treatment of Parts . . . . . WP 018 00
Nickel Plate . . . . . AMS 2403

Alphabetical Index

Subject **Page No.**

Introduction 2
Turbine−to−Compressor Tie Bolt 2
Inspection 2
Repair 2
Diameters A, B, C, and D Repair 3

Record of Applicable Technical Directives

None

1. **INTRODUCTION.**

2. This work package (WP) provides the instructions for inspection and repair of the Turbine−to−Compressor tie bolt used in the T56−A−427 turboprop engine.

3. **TURBINE−TO−COMPRESSOR TIE BOLT.**

4. TURBINE−TO−COMPRESSOR TIE BOLT − INSPECTION.

a. Inspect tie bolt. Refer to table 1.

b. Refer to WP 017 00 for magnetic particle inspection (MPI) procedures.

5. TURBINE−TO−COMPRESSOR TIE BOLT − REPAIR.

a. Repair tie bolt. Refer to Disposition column, table 1.

b. Replace tie bolt not within serviceable limits after repair.

Table 1. Turbine−to−Compressor Tie Bolt − Inspection and Repair

Condition	Serviceable Limits	Repairable Limits	Disposition
Non−metallic inclusions.	Light, scattered non metallic inclusions parallel to the material flow lines. Indications cutting entirely across the threaded section, in a radii or emanating from holes with no evidence of fatigue−type progression. No cracks acceptable.	Not repairable.	Condemn part exceeding serviceable limits.
Wear or pits on pilot Diameters A, B, C, and D (figure 1).	0.0005 in. max depth.	0.015 in. max depth.	Repair tie bolt. Refer to paragraph 6, this WP.
Tie bolt concentricity.	Diameters B and C must be concentric with tie bolt axis within 0.006 in. FIR. Diameter E must be concentric with tie bolt axis within 0.002 in. FIR. Axis established by Diameters A and D (figure 1).	Not repairable.	Condemn part exceeding serviceable limits.
Damaged plating on thrust face of Diameter D (figure1).	Not serviceable.	Any plating damage.	Strip plating and process with electroless nickel plate per WP 018 00 or nickel plate per AMS 2403. Plating thickness shall be 0.0015 − 0.0030 in. after finishing. Bake at 375°F (190°C) for three hours.
Corrosion in bolt shank area, other than mute areas.	Not serviceable.	Replate if parent metal is not pitted.	Strip plating and process with electroless nickel plate per WP 018 00 or nickel plate per AMS 2403. Plating thickness shall be 0.0015 − 0.0030 in. after finishing. Bake part at 375°F (190°C) for three hours.

Table 1. Turbine−to−Compressor Tie Bolt − Inspection and Repair (contd)

Condition	Serviceable Limits	Repairable Limits	Disposition
Obstructed oil hole.	Not serviceable.	Any obstruction.	Clean obstructed hole.

6. TURBINE−TO−COMPRESSOR TIE BOLT − DIAMETERS A, B, C, AND D REPAIR.

NOTE

Depth of grinding must be held to a minimum and not exceed 0.015 in.

a. Remove worn or pitted areas by grinding or stripping.

b. Plate diameters with hard chrome plate or electroless nickel plate per WP 018 00.

c. Plating thickness shall not be less than 0.001 in. and shall not exceed 0.015 in. after finish grinding.

d. Grind diameters to dimensions shown in figure 1.

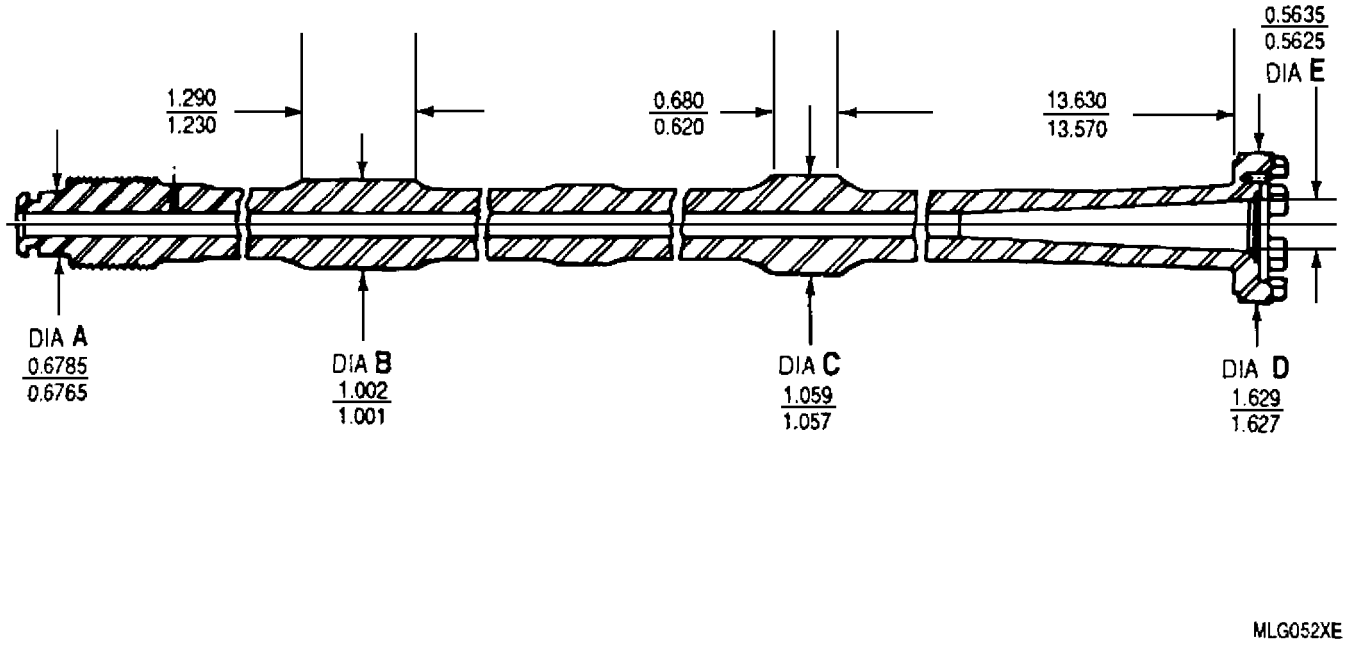

Figure 1. Turbine−to−Compressor Tie Bolt Dimensions

DEPOT MAINTENANCE

DISASSEMBLY, INSPECTION, REPAIR, ASSEMBLY, AND TESTING

MAIN PRESSURE AND SCAVENGE OIL PUMP

Reference Material

Internal and External Spline − Repair . . . . . WP 047 00

Alphabetical Index

Subject **Page No.**

Introduction 2
Main Pressure and Scavenge Oil Pump 2
Assembly 5
Disassembly 2
Inspection 2
Repair 4
Testing 5

Record of Applicable Technical Directives

None

1. **INTRODUCTION.**

2. This work package (WP) provides the instructions for disassembly, inspection, repair, assembly, and testing of the main pressure and scavenge oil pump used on the T56−A−427 turboprop engine.

3. **MAIN PRESSURE AND SCAVENGE OIL PUMP.**

4. MAIN PRESSURE AND SCAVENGE OIL PUMP − DISASSEMBLY.

a. Remove the following parts, as required, using figure 1 as a guide.

(1) Magnetic plug (1) and preformed packing (2) from adapter (3).

(2) Adapter (3) and gasket (4) from cover assembly (5).

(3) Nuts (27), washers (26), and cover assembly (5).

(4) Pressure regulating valve assembly (31) and preformed packings (32 and 33) from body assembly (12).

(5) Lockring (34), regulating valve screw (35), spring (36), stem (37), and poppet (38) from valve body (39).

(6) Drive gear (6) and preformed packing (7), idler gear (22) and preformed packing (21), and preformed packings (10 and 11) from body assembly (12).

(7) Nuts (16), washers (17), and cover assembly (15) from body assembly (12).

(8) Shaft gear (13) and idler gear (19).

b. Discard gasket (4) and all preformed packings.

5. MAIN PRESSURE AND SCAVENGE OIL PUMP − INSPECTION.

Support Equipment Required

Part No./Type Designation	Nomenclature
6799193	Adapter, valve, pressure regulating
6799675 or equivalent	Tester, spring, 0−10 pound range, 0.001 pound graduations with one pound vernier controlled scale
6799783	Gage kit, retractable dial snap external spline PD pitch

Materials Required

Specification No./Part No.	Nomenclature
MIL−C−7024	Fluid, calibrating
MIL−PRF−23699	Oil, lubricating

a. Compress spring (36, figure 1), using 6799675 tester (figure 2) or equivalent to a length as shown in Table 1. Spring pressure at this compressed length shall be as shown in Table 1.

Table 1. Spring Inspection.

Spring Free Length	Compressed Length	Load
1.963 in.	1.2750 in.	5.040−4.760 lb.
1.863 in.	1.1750 in.	5.040−4.760 lb.

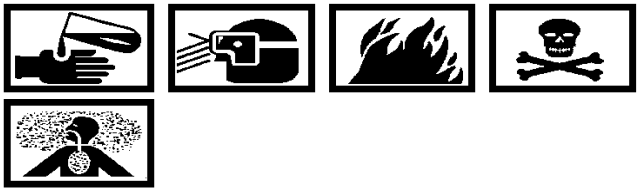

Lubricating Oil, MIL−PRF−23699 2

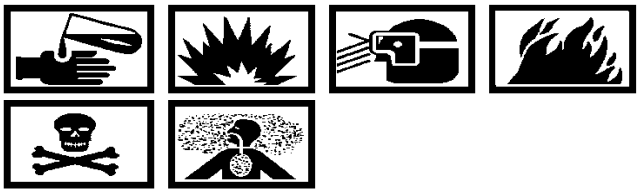

Calibrating Fluid MIL−C−7024, Type II 57

b. Install pressure regulating valve assembly (31, figure 1) in 6799193 adapter (figure 3). Set up per figure 3. Flow MIL−PRF−23699 oil at 180°F (82°C) or MIL−C−7024 calibrating fluid at 80°F (27°C), in normal direction to determine that pressure regulating valve assembly will open and close.

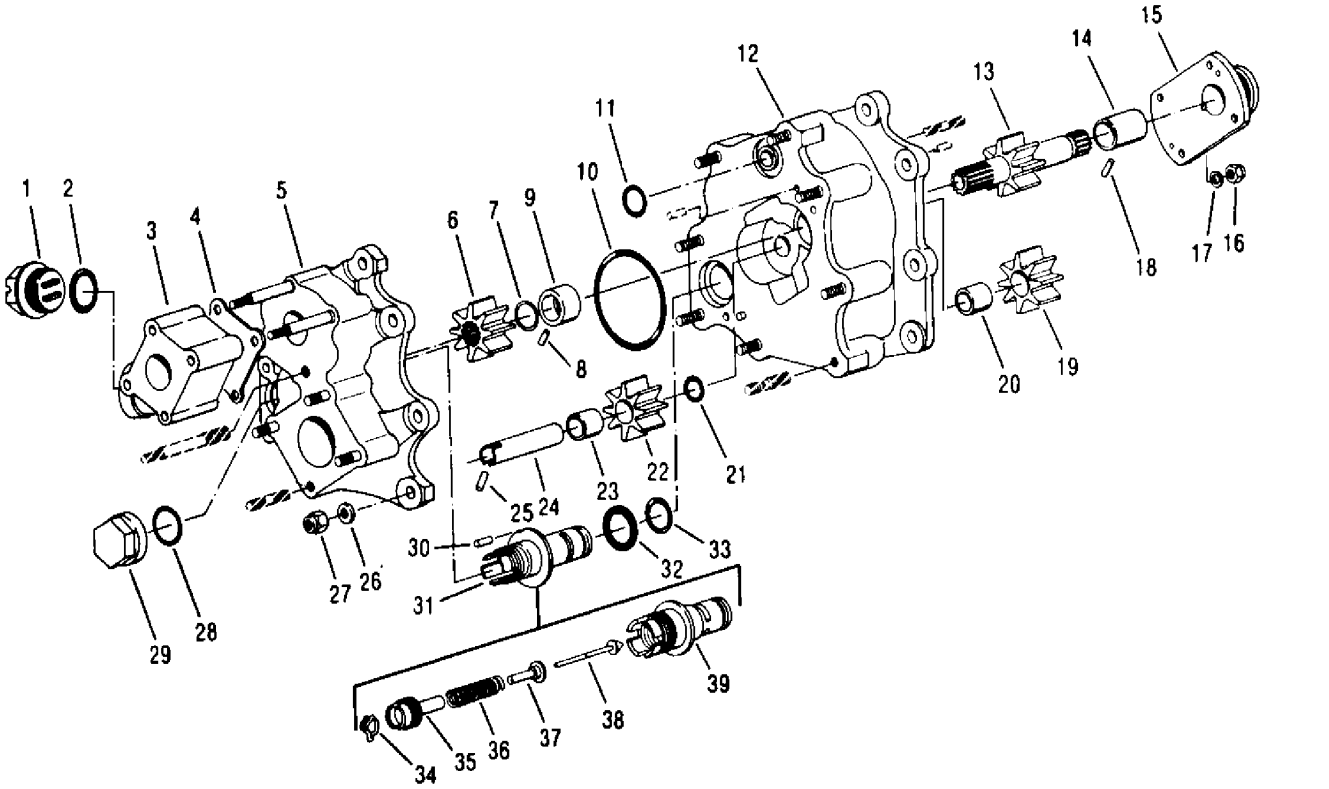

1.	Magnetic Plug	14.	Bushing	27.	Nut
2.	Preformed Packing	15.	Cover Assembly	28.	Preformed Packing
3.	Adapter	16.	Nut	29.	Cap
4.	Gasket	17.	Washer	30.	Pin
5.	Cover Assembly	18.	Pin	31.	Pressure Regulating Valve Assembly
6.	Drive Gear	19.	Idler Gear		
7.	Preformed Packing	20.	Bushing	32.	Preformed Packing
8.	Pin	21.	Preformed Packing	33.	Preformed Packing
9.	Bushing	22.	Idler Gear	34.	Lockring
10.	Preformed Packing	23.	Bushing	35.	Regulating Valve Screw
11.	Preformed Packing	24.	Idler Shaft	36.	Spring
12.	Body Assembly	25.	Pin	37.	Stem
13.	Shaft Gear	26.	Washer	38.	Poppet
				39.	Valve Body

Figure 1. Main Pressure and Scavenge Oil Pump

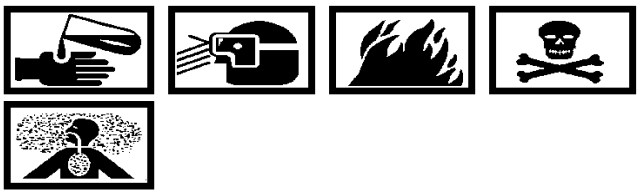

Lubricating Oil, MIL−PRF−23699 2

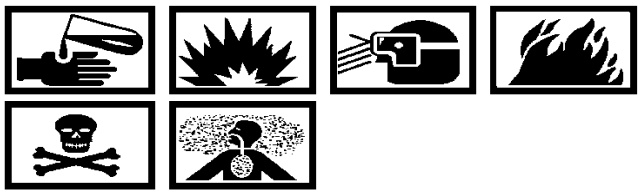

Calibrating Fluid MIL−C−7024, Type II 57

c. Check pressure regulating valve assembly for leakage by applying MIL−PRF−23699 oil at 180°F (82°C) or MIL−C−7024 calibrating fluid at 80°F (27°C) in direction opposite to normal flow at 6−6.5 psi. Allow one minute for pressure regulating valve assembly to stabilize. Leakage shall not exceed three cc per hour or six drops in five minutes. Set up per figure 4.

d. Inspect bore and bottom of gear pockets in body assembly (12, figure 1) for wear and/or scoring. Wear and/or scoring occur in various patterns and intensities; therefore, acceptance of a condition must be based on an individual judgement of the affect on pump performance. Light wear and/or scoring less than 0.003 in. deep is acceptable providing the pattern does not extend completely around the bottom of bore surfaces of the gear pocket.

e. Inspect cover assemblies (5 and 15) for evidence of gear end wear or scoring. Replace covers with gear end wear or scoring in excess of 0.003 in.

f. Refer to WP 047 00 for inspection of splines. Use 6799783 gage kit (figure 5).

6. MAIN PRESSURE AND SCAVENGE OIL PUMP − REPAIR.

Support Equipment Required

Part No./Type Designation	Nomenclature
6799193	Adapter, valve, pressure regulating

Materials Required

Specification No./Part No.	Nomenclature
A−A−1206	Cloth, crocus
AMS 4842	Casting, leaded bronze

a. Replace damaged idler gear bushings (20 and 23, figure 1). Refer to table 2 for dimensional limits.

b. Replace damaged drive gear bushing (9) per figure 6.

c. Replace damaged idler shaft (24). Refer to table 2 for dimensional limits.

d. When pressure regulating valve assembly exceeds allowable leakage limits as specified in paragraph 5, this work package, replace poppet (38, figure 1).

e. Reassemble pressure regulating valve assembly. Install in 6799193 adapter (figure 3). Set up per figure 4. Cycle valve 10 − 12 times, then check for leakage. Replace parts as required to bring leakage within limits.

f. Inspect stem (37, figure 1) for sharp edges, ridges or wear. Remove sharp edges or ridges with fine crocus cloth and polish smooth. Guide stem OD must be a minimum of 0.182 in. after rework.

g. Measure idler shaft (24) bore in cover assembly (5). This dimension must not exceed 0.437 in. If this dimension is exceeded, repair cover by installing a bushing made of AMS 4842 material.

7. MAIN PRESSURE AND SCAVENGE OIL PUMP − ASSEMBLY.

Materials Required

Specification No./Part No.	Nomenclature
AS3084−12	Packing, preformed
AS3085−111	Packing, preformed
AS3085−113	Packing, preformed
AS3085−114	Packing, preformed
AS3085−117	Packing, preformed
AS3085−118	Packing, preformed
AS3085−143	Packing, preformed
MIL−PRF−23699	Oil, lubricating
PL32M Hylomar	Compound, sealing
23052087	Gasket
6876884	Seal, O−ring

a. Reassemble oil pump using figure 1 as a guide and the following instructions.

b. Dimensional limits shall be as shown in table 1.

Lubricating Oil, MIL−PRF−23699 2

c. Apply MIL−PRF−23699 oil to gears, preformed packings, bores, shafts, and all parts of pressure regulating valve assembly.

d. Install shaft gear (13), idler gear (19) and cover assembly (15) in body assembly (12). Install nuts (16) and washers (17). Torque nuts to 37 − 42 lb in. (QA)

e. Install drive gear (6), idler gear (22), preformed packings (10, 11 and 21) and seal (7) in body assembly (12).

f. Assemble regulating valve screw (35), spring (36), stem (37) and poppet (38) in valve body (39). Adjust regulating valve screw 2 1/4 − 2 1/2 turns below flush with valve body.

g. Install pressure regulating valve assembly (31) and preformed packings (32 and 33) in body assembly (12).

Sealing Compound PL32M Hylomar 40

h. Apply a thin coating of PL32M Hylomar sealing compound on to mating surfaces of body assembly (12) and cover assembly (5).

NOTE

Pump should turn freely by hand after reassembly.

i. Install cover assembly (5), nuts (27) and washers (26). Torque nuts 74 − 89 lb in. (QA)

j. Install magnetic plug (1) and preformed packing (2) in adapter (3). Torque magnetic plug to 240 − 300 lb in. (QA)

k. Install adapter (3) and gasket (4).

8. MAIN PRESSURE AND SCAVENGE OIL PUMP − TESTING.

Support Equipment Required

Part No./Type Designation	Nomenclature
6799057	Adapter, test, oil pump
7057	Stand assembly, test, lube and scavenge pump

Materials Required

Specification No./Part No.	Nomenclature
MIL−PRF−23699	Oil, lubricating
6870042	Gasket
PL32M Hylomar	Compound, sealing

CAUTION

Valves on test bench at all pump inlets and outlets shall be open before starting motor to drive pump. Pump shall never be operated against a “dead head.”

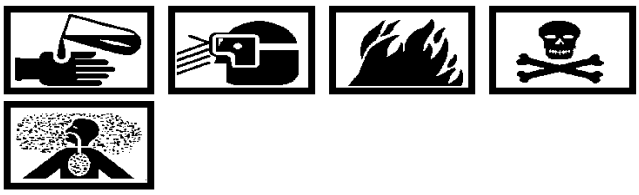

Lubricating Oil, MIL−PRF−23699 2

a. Maintain MIL−PRF−23699 oil at 75 − 105°F (24 − 41°C).

b. Install pump assembly and 6870042 gasket on 7057 test stand (figure 7) using 6799057 test adapter (figure 8).

NOTE

After final adjustment of regulating valve screw, screw shall not protrude more than one turn past valve body.

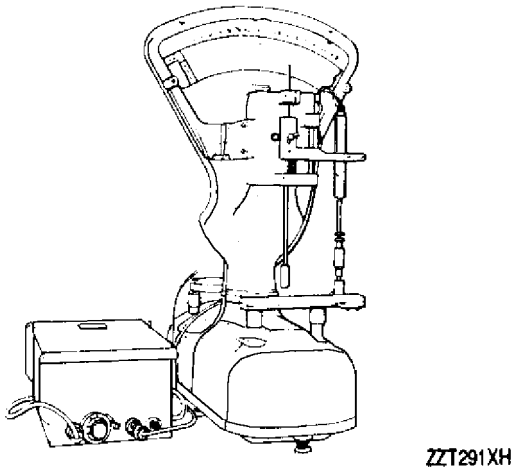

Figure 2. 6799675 Spring Tester

c. Adjust regulating valve screw (35, figure 1) and pressure outlet restriction valve to obtain a flow of four gpm at 52 − 58 psi at 3200 − 3300 rpm.

d. Install lockring (34).

Sealing Compound PL32M Hylomar 40

e. Apply a thin coat of PL32M Hylomar sealing compound to threads of cap (29).

f. Install cap (29) and preformed packing (28). Torque cap to 110 lb in. (QA)

g. Adjust pump outlet restriction valve to obtain a 40−45 psi discharge pressure. Operate pump for at least five minutes.

CAUTION

Do not operate at this condition for more than 30 seconds.

h. Make a vacuum check of scavenge element by shutting off oil supply to inlet of pump. There shall be at least 20 in. of mercury (vacuum).

i. Check for leaks. Some leakage is permissible at pump to adapter splitline flange. There shall be no other external leakage.

j. Check for internal leaks.

(1) Connect an oil inlet line to the pump.

(2) Leave the aft side of the pump open for observation.

(3) Plug the oil pressure outlet port.

(4) Apply 4−8 psig oil pressure at the pump inlet for one minute.

(5) Check for internal oil leakage during this period at the aft side of the pump. No leakage is permitted.

k. Check system filter for metal pickup. If metal chips are observed, reinspect pump gears and gear pockets.

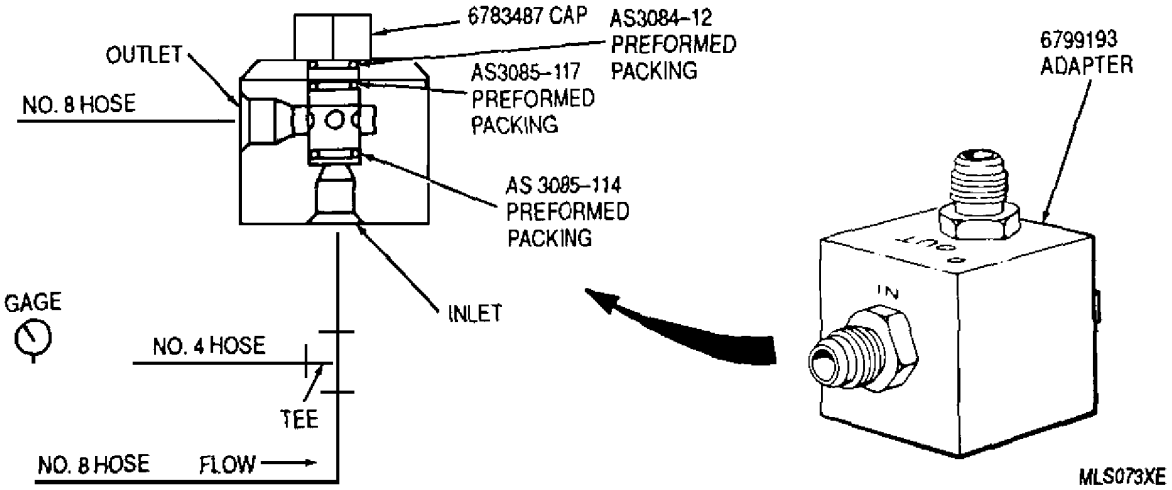

Figure 3. Testing Pressure of Pressure Regulating Valve Assembly with 6799193 Adapter

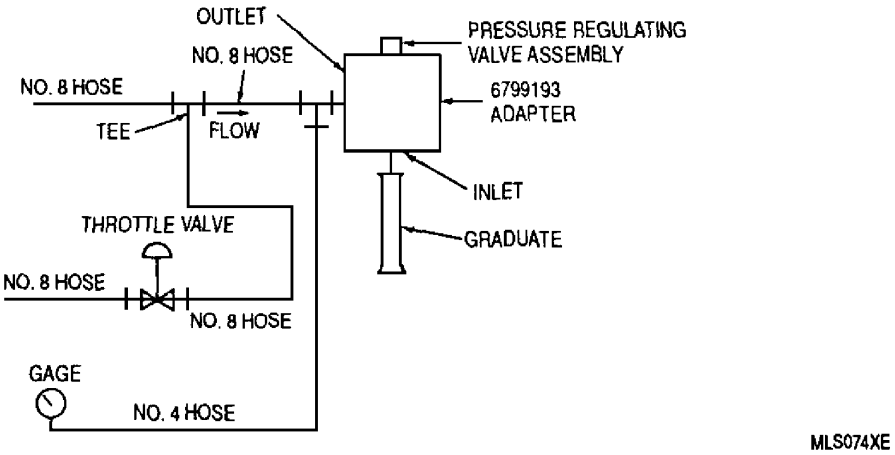

Figure 4. Typical Setup for Testing Leakage of Pressure Regulating Valve Assembly with 6799193 Adapter

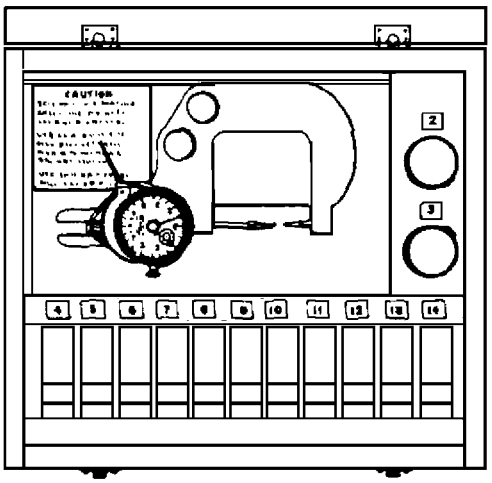

Figure 5. 6799783 Retractable Dial Snap External Spline PD Pitch Kit Gage ZZT385XH

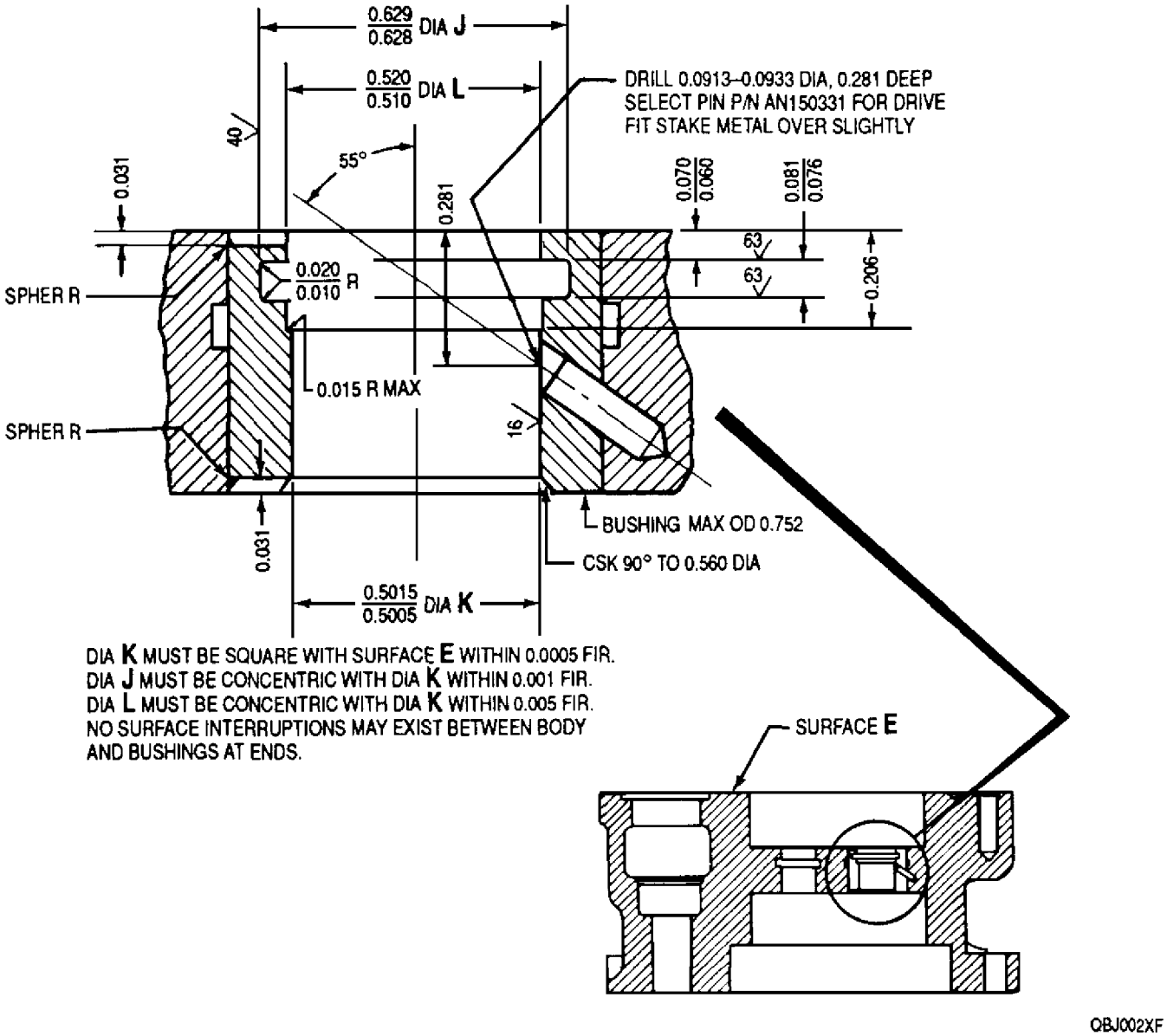

Figure 6. Drive Shaft Bushing Replacement

Table 2. Dimensional Limits

Location	Min.	Max.
Bushing—Pump cover	0.0030T	0.0010T
Shaftgear—Scavenge body (bushing)	0.0020L	0.0040L
Pressure element gears (end clearance)	0.0020	0.0040
Scavenge element gears (end clearance)	0.0020	0.0040
Drive shaftgear—Body (bushing)	0.0020L	0.0040L
Bushing—Pressure body	0.0030T	0.0040T
Idler shaft—Pump cover	0.0000	0.0025L
Idler shaft—Idler gear (bushing)	0.0010L	0.0030L
Regulating valve—Pressure and scavenge cover	0.0080L	0.0200L
Regulating valve—Pressure body	0.0020L	0.0070L

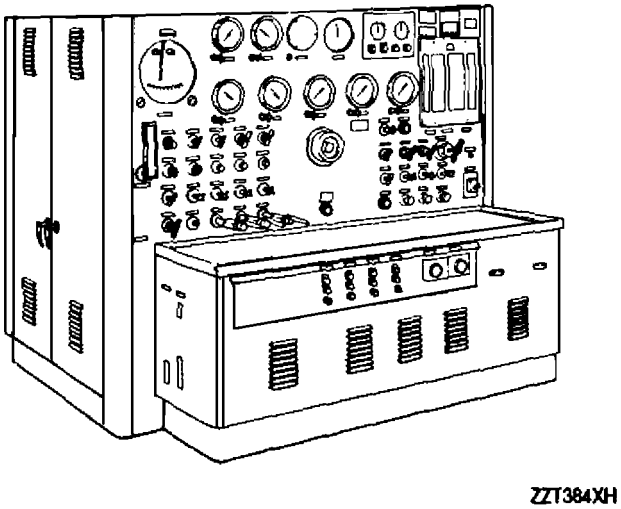

Figure 7. 7057 Lube and Scavenge Pump Test Stand Assembly

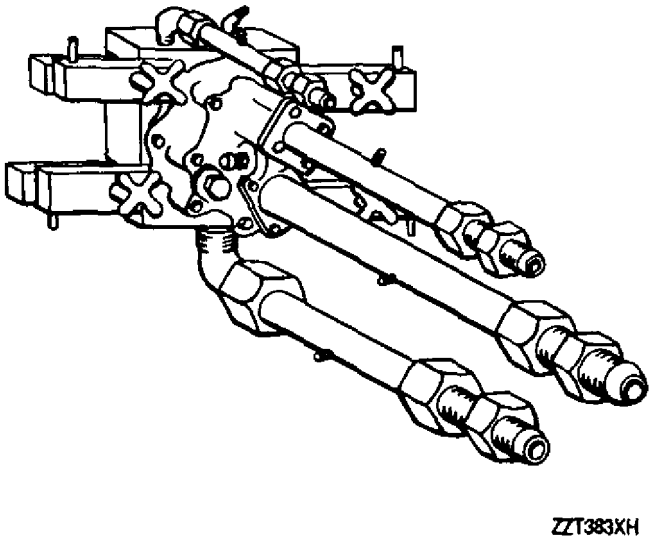

Figure 8. 67799057 Oil Pump Test Adapter

DEPOT MAINTENANCE

DISASSEMBLY, INSPECTION, REPAIR, AND ASSEMBLY

TURBINE REAR SCAVENGE OIL PUMP

Reference Material

None

Alphabetical Index

Subject **Page No.**

Introduction 2
Turbine Rear Scavenge Oil Pump 2
Assembly 2
Disassembly 2
Inspection and Repair 2

Record of Applicable Technical Directives

None

1. **INTRODUCTION.**

2. This work package (WP) provides the instructions for disassembly, inspection, repair, and assembly of the turbine rear scavenge oil pump used on the T56−A−427 turboprop engine.

3. **TURBINE REAR SCAVENGE OIL PUMP.**

4. TURBINE REAR SCAVENGE OIL PUMP − DISASSEMBLY.

a. Remove parts, using figure 1 as a guide.

NOTE

Maintain shaftgear (2, figure 1) and attached drive gear shaft (3) as a matched set.

5. TURBINE REAR SCAVENGE OIL PUMP − INSPECTION AND REPAIR.

a. Inspect shaftgear (2, figure 1) and drive gear shaft (3) as follows:

(1) Magnetic particle inspect both gears. There shall be no steps or hollows on tooth surfaces as determined visually.

(2) Inspect gear tooth wear for any unusual pattern.

b. Inspect bushing (4) for wear or damage. Replace bushing when worn beyond dimensional limits in table 1.

c. Inspect idler gear shaft (6) for wear or looseness in pump body (1). Replace when dimensional limits in table 1 are exceeded.

d. Inspect drive gear (7) and idler gear (9) for tooth wear and end clearance to pump body and cover (10).

e. Inspect idler gear bushing (8) for wear. Replace when dimensional limits in table 1 are exceeded.

6. TURBINE REAR SCAVENGE OIL PUMP − ASSEMBLY.

Materials Required

Specification No./Part No.	Nomenclature
MIL−PRF−23699	Oil, lubricating
MS20995C32	Lockwire

a. Dimensional limits shall be as shown in table 1.

Lubricating Oil, MIL−PRF−23699 2

b. Apply MIL−PRF−23699 oil to gears, bores and shafts.

c. Reassemble pump, using figure 1 as a guide. Torque screws (12, figure 1) to 20 − 25 lb in. (QA)

d. If pump does not turn freely after reassembly, loosen screws and rotate the parts while screws are being torqued.

e. Lockwire screws. (QA)

Table 1. Dimensional Limits

Location	Min.	Max.
Body—Support	0.0010L	0.0030L
Bushing—Body	0.0005L	0.0030L
Drive gear shaft—Bushing	0.0010L	0.0035L
Shaftgear—Body	0.0010L	0.0035L
Idler gear shaft—Body	0.0020T	0.0001L
Idler gear shaft—Gear	0.0005L	0.0025L

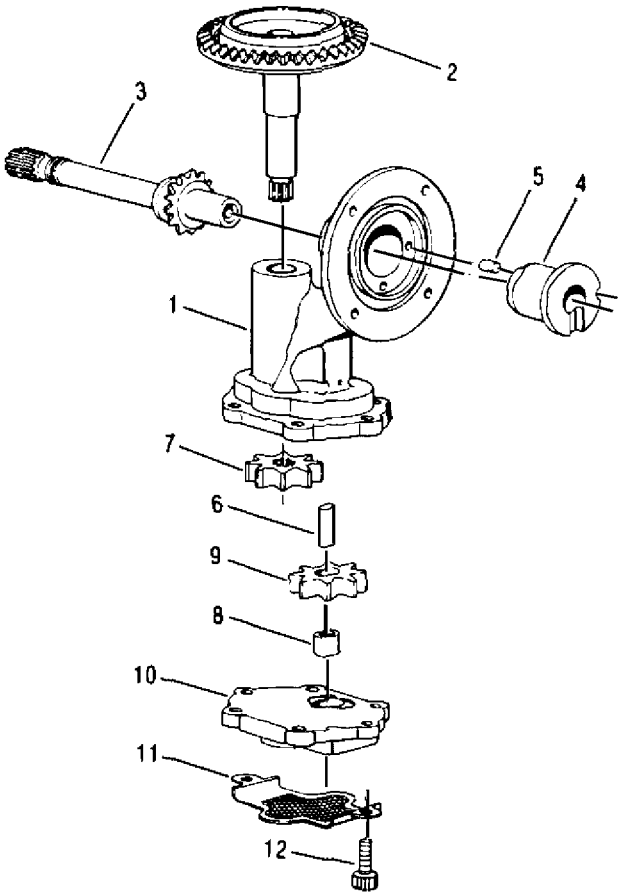

MGJ015XC

1.	Pump Body	7.	Drive Gear
2.	Shaftgear	8.	Bushing
3.	Drive Gear Shaft	9.	Idler Gear
4.	Bushing	10.	Cover
5.	Pin	11.	Screen
6.	Idler Gear Shaft	12.	Screw

Figure 1. Turbine Rear Scavenge Oil Pump

Table 1. Dimensional Limits (contd)

Location	Min.	Max.
Drive and idler gears—Body (end clearance)	0.0010	0.0030
Idler and drive gears—Body	0.0020L	0.0060L

DEPOT MAINTENANCE

DISASSEMBLY, INSPECTION, REPAIR, ASSEMBLY, AND TESTING

POWER SECTION EXTERNAL SCAVENGE OIL PUMP

Reference Material

None

Alphabetical Index

Subject **Page No.**

Introduction 2
Power Section External Scavenge Oil Pump 2
Assembly 2
Disassembly 2
Inspection and Repair 2
Testing 4

Record of Applicable Technical Directives

None

1. **INTRODUCTION.**

2. This work package (WP) provides the instructions for disassembly, inspection, repair, assembly, and testing of the power section external scavenge oil pump used on the T56−A−427 turboprop engine.

3. **POWER SECTION EXTERNAL SCAVENGE OIL PUMP.**

4. POWER SECTION EXTERNAL SCAVENGE OIL PUMP − DISASSEMBLY.

a. Remove parts using figure 1 as a guide.

5. POWER SECTION EXTERNAL SCAVENGE OIL PUMP − INSPECTION AND REPAIR.

Support Equipment Required

Part No./Type Designation	Nomenclature
6799801	Fixture, ream, external scavenge oil pump bushing
6799802	Gage, plug, external scavenge oil pump bushing “GO−NO GO”

a. Inspect and repair cover assembly as follows:

(1) Clean out two back vent holes using a 0.030 in. diameter drill.

(2) Check idler shafts (9) for looseness. Shaft is considered serviceable if diameter of shaft end that presses into cover is not less than 0.4350 in. Replace idler shaft if loose. When replacing shaft, check pin (8) for damage. Replace damaged pin as follows:

(a) Remove damaged pin.

(b) Select pin MS9486−05 for drive fit.

(3) Check idler shafts (9, figure 1) for scoring and wear. Polish to remove metal buildup caused by scoring. Shaft is considered serviceable if diameter of the polished area projecting from cover is not less than 0.4340 in. Replace shaft if limit is exceeded. When replacing shaft, check pin (8) for damage. Replace damaged pin.

(4) Clean out the 0.062 in. diameter hole in idler shafts, using a 0.060 in. diameter drill.

(5) Check cover for indications of gear end wear. Remove indications of gear end wear by removing shafts and lapping cover. (When replacing shaft, check pin (8) for damage. Replace damaged pin.) Thickness of cover outer rim after lapping shall not be less than 0.235 in. and idler shaft bore depth shall not be less than 0.315 in. Replace cover below these limits.

b. Inspect body gear pocket areas for wear or scoring. Wear and scoring occur in various patterns and intensities. Replace if wear and scoring exceeds 0.003 in. deep or if pattern extends completely around bottom of bore surfaces of pocket.

NOTE

Be sure to restore oil squeeze out slots.

c. Check bushings (3) for wear with 6799802 go−no go gage (figure 2). Replace worn bushings as follows:

(1) Press out old bushing.

(2) Press in replacement bushing with a 0.001 − 0.003 in. tight fit. Bushing shall be 0.000 − 0.015 in. below surface of both ends of gear.

(3) Using a 6799801 fixture (figure 3), ream bushing ID to 0.4370 − 0.4375 in. with a 16 RMS surface finish. Gear OD shall be located within 0.001 in. FIR of bushing ID axis after reaming. Check reamed ID with go−no go plug gage.

6. POWER SECTION EXTERNAL SCAVENGE OIL PUMP − ASSEMBLY.

Support Equipment Required

Part No./Type Designation	Nomenclature
——	Wrench, torque (0 − 50 lb in.)

Materials Required

Specification No./Part No.	Nomenclature
MIL−PRF−23699	Oil, lubricating

a. Dimensional limits shall be as shown in table 1.

b. Select pump gears in body to obtain 0.001 − 0.003 in. end clearance.

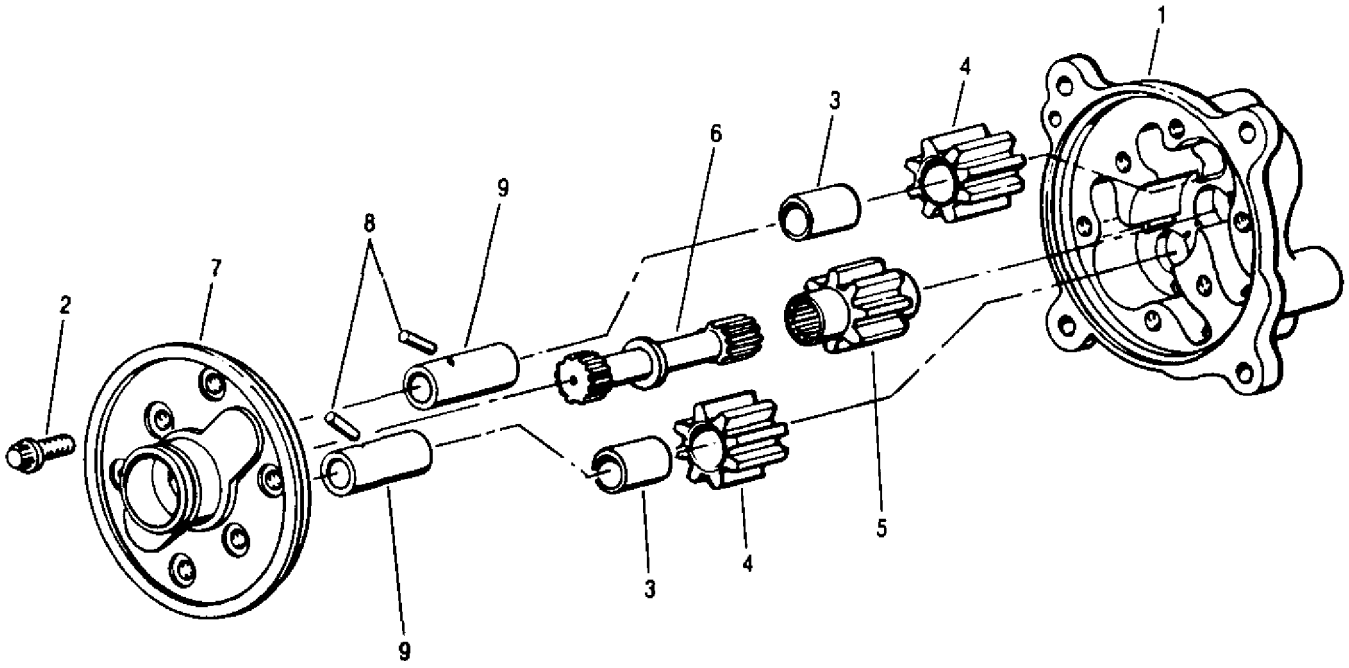

1.	Pump Body	7.	Idler Spur Gear	10.	Cover
2.	Bolt	8.	Drive Shaftgear	11.	Pin
3.	Bushing	9.	Drive Shaft	12.	Idler Shaft

Figure 1. External Scavenge Oil Pump

Table 1. Dimensional Limits

Location	Min.	Max.
Idler spur gear assembly—Idler shaft	0.0015L	0.0035L
Idler shaft—Pump Body	0.0015L	0.0045L
Idler shaft—Pump cover	0.0015T	0.0000
Idler spur gear bushing—Idler spur gear	0.0030T	0.0000
Idler spur gears and drive shaftgear—Body pockets	0.0020L	0.0060L
Cover assembly—Body	0.0010L	0.0050L
Drive shaftgear journals—Pump cover/body	0.0010L	0.0050L
Gears—Pump body (end clearance)	0.0010	0.0030

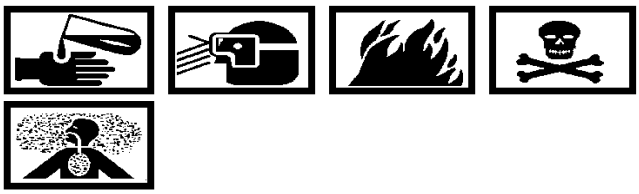

Lubricating Oil, MIL−PRF−23699 2

c. Apply MIL−PRF−23699 oil to gears, bores, and shafts.

d. Reassemble pump using figure 1 as a guide. Torque bolts (2) to 35 − 40 lb in. (QA)

e. Pump should turn freely by hand after assembly. If not, loosen bolts and rotate pump drive while retightening bolts to 35 − 40 lb in. (QA)

7. POWER SECTION EXTERNAL SCAVENGE OIL PUMP − TESTING.

Support Equipment Required

Part No./Type Designation	Nomenclature
6798091	Adapter, test, oil pump
7057	Stand Assembly, test, lube and scavenge pump

a. Use 6798091 adapter (figure 4) in 7057 stand (figure 5) when testing pump.

b. Minimum pump flow shall be 10.2 gpm when rotated at 3250 ± 50 rpm with outlet restricted to 40 − 50 psi and an oil temperature of 75 − 105°F (24 − 41°C).

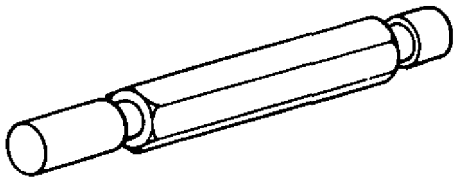

ZZT380XJ

Figure 2. 6799802 Plug Gage

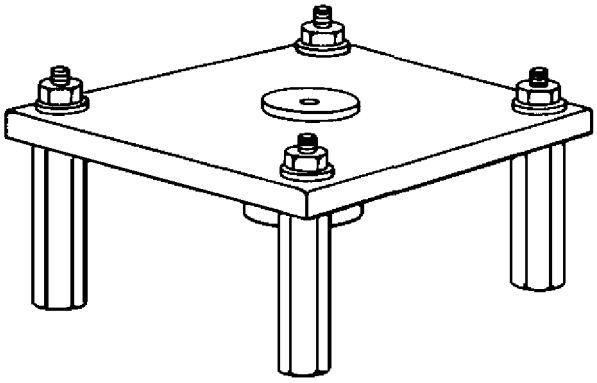

ZZT381XH

Figure 3. 6799801 Ream Fixture

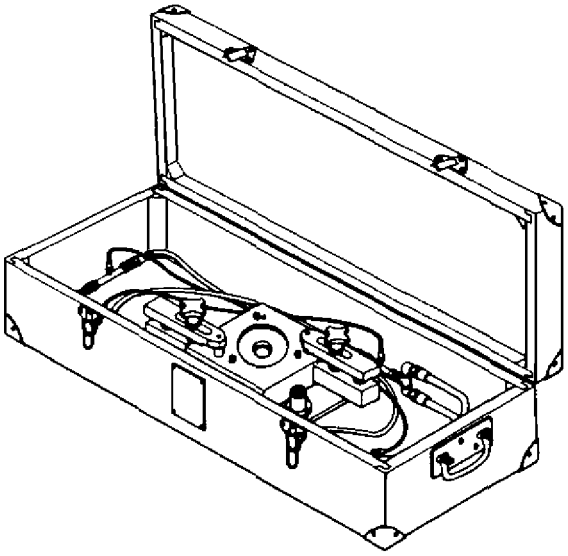

ZZT382XH

Figure 4. 6798091 Test Adapter

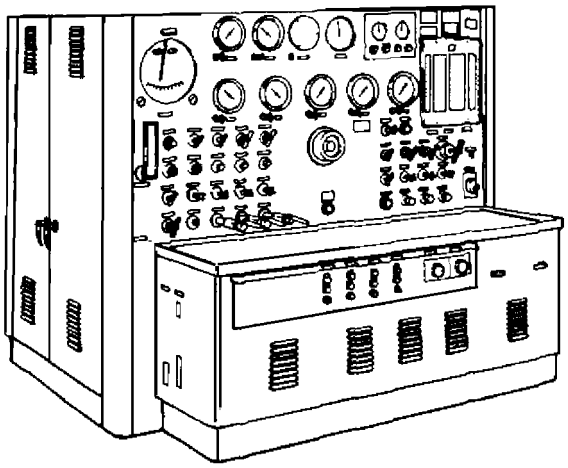

ZZT383XH

Figure 5. 7057 Lube and Scavenge Pump Test Stand

DEPOT MAINTENANCE

DISASSEMBLY, CLEANING, INSPECTION, REPAIR, ASSEMBLY, AND TESTING

REDUCTION GEAR OIL PUMP ASSEMBLY

Reference Material

Internal and External Splines − Repair . . . . . WP 047 00
Plating, Chromium, Hard Deposit . . . . . AMS 2406

Alphabetical Index

Subject **Page No.**

Introduction 2
Reduction Gear Oil Pump Assembly 2
Assembly 11
Cleaning 2
Disassembly 2
Inspection 2
Repair 4
Cover Repair 4
Drive Gear, Idler Gear, and Bushing Replacement 9
Guide Repair 4
Pump Body Repair 5
Testing 11

Record of Applicable Technical Directives

None

1. **INTRODUCTION.**

2. This work package (WP) provides the instructions for disassembly, cleaning, inspection, repair, assembly, and testing of the reduction gear oil pump assemblies used on the T56−A−427 turboprop engine.

3. **REDUCTION GEAR OIL PUMP ASSEMBLY.**

4. REDUCTION GEAR OIL PUMP ASSEMBLY − DISASSEMBLY.

a. Remove parts as required, using figure 1 as a guide.

b. Discard all preformed packings.

5. REDUCTION GEAR OIL PUMP ASSEMBLY − CLEANING.

Materials Required

Specification No./Part No.	Nomenclature
MIL−PRF−680, Type II	Solvent, Dry Cleaning

Dry Cleaning Solvent MIL−PRF−680, Type II **3**

Compressed Air **56**

a. Clean all parts with MIL−PRF−680, type II dry cleaning solvent. Clean and thoroughly rinse all passages. Dry parts with a lint−free cloth or compressed air.

6. REDUCTION GEAR OIL PUMP ASSEMBLY − INSPECTION.

Support Equipment Required

Part No./Type Designation	Nomenclature
6799676	Tester, spring, 0−150 pound range, 1/4 pound graduations

a. Using 6799676 tester (figure 2) compress spring (20, figure 1) to a 1.1730 in. length. Spring pressure at this compressed length shall be 24−26 lbs. Reference free length shall be 1.727 in.

b. Using 6799676 tester, compress spring (25, figure 1) to a 0.5050 in. length. Spring pressure at this compressed length shall be 1.88 − 2.12 lbs. Compress the spring to a 0.2725 in. length. Spring pressure at this compressed length shall be 3.01 − 3.25 lbs. Reference free length shall be 0.916 in.

c. Inspect check valve rubber cone (27, figure 1) for nicks or tears on cone face. Replace check valve if seating face is damaged.

d. Inspect check valve stem (26) for wear. Remove sharp edges or burrs on stem using a fine cloth and polish smooth. Replace stem if OD is less than 0.292 in.

e. Inspect check valve guide stem (24) for wear. Remove sharp edges or burrs on guide stem OD or ID with a fine cloth and polish smooth. If guide ID is greater than 0.305 in., repair per paragraph 8, this WP.

f. Inspect bore and bottom of gear pockets in pump body (12, figure 1) for wear or scoring. Wear and scoring occur in various patterns and intensities. Repair pump body per paragraph 10, this WP, if wear and scoring exceed 0.003 in. deep or if pattern extends completely around bottom of bore surfaces of gear pocket.

g. Inspect pin (32, figure 1) in idler gear shaft bore for damage and looseness. Repair per paragraph 10, this WP.

h. Inspect cover (8, figure 1) for evidence of wear or scoring. Replace cover if wear or scoring exceeds 0.003 in. deep.

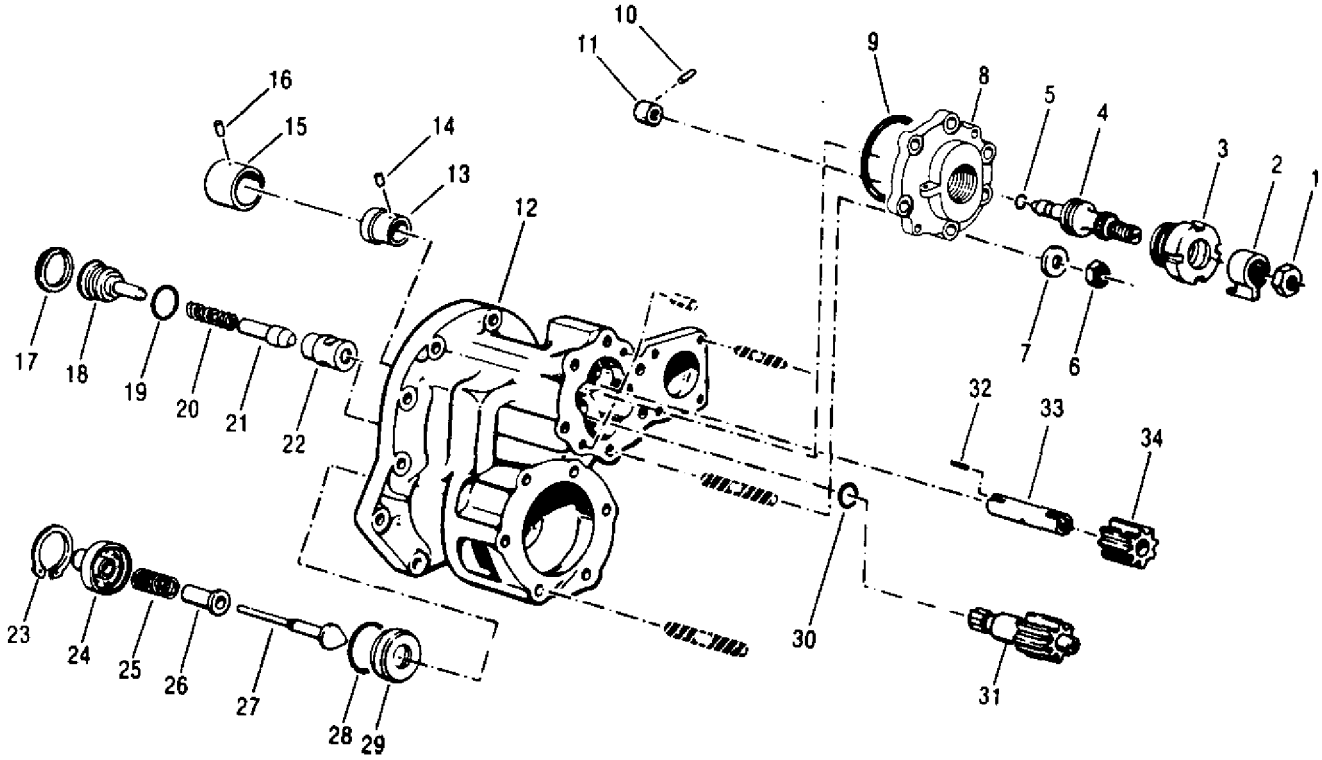

1.	Nut	12.	Pump Body	23.	Retaining Ring
2.	Lock	13.	Bushing (Original Part)	24.	Guide
3.	Bushing	14.	Pin	25.	Spring
4.	Pressure Adjusting Valve Shaft	15.	Dowel	26.	Stem
		16.	Pin	27.	Valve
5.	Preformed Packing	17.	Retaining Ring	28.	Preformed Packing
6.	Nut	18.	Seat	29.	Seat
7.	Washer	19.	Preformed Packing	30.	Preformed Packing
8.	Cover	20.	Spring	31.	Drive Gear
9.	Preformed Packing	21.	Piston	32.	Pin
10.	Pin	22.	Sleeve	33.	Shaft
11.	Bushing			34.	Idler Gear

Figure 1. Reduction Gear Oil Pump

i. Inspect drive gear (31, figure 1) splines per WP 047 00.

7. REDUCTION GEAR OIL PUMP ASSEMBLY − REPAIR.

8. Guide Repair.

a. If check valve guide stem (24, figure 1) ID is greater than 0.305 in., chrome plate using AMS 2406. Finish grind ID to 0.302 − 0.303 in. Stem shall be square with front face within 0.002 in. FIR. Polish sharp edges and remove burrs.

9. Cover Repair.

Support Equipment Required

Part No./Type Designation	Nomenclature
6795913	Jig, drill, reduction gear oil pump cover bushing lockpin hole
6795915	Gage, depth, flush pin, reduction gear oil pump bushing countersink (small bushing)
6799515	Drift, installation, reduction gear oil pump body and cover bushing
6799516	Jig, ream, reduction gear oil pump cover
6799594	Gage, go−no go, reduction gear oil pump body and cover bushing (small bushing)

Materials Required

Specification No./Part No.	Nomenclature
AN150306	Pin (1)
6726745−6	Bushing (AR)
6871625	Bushing (AR)

a. Inspect cover (8, figure 1) for evidence of wear or scoring. Light wear or scoring less than 0.003 in. deep is acceptable. Covers with gear end wear in excess of 0.003 in. may be repaired as follows:

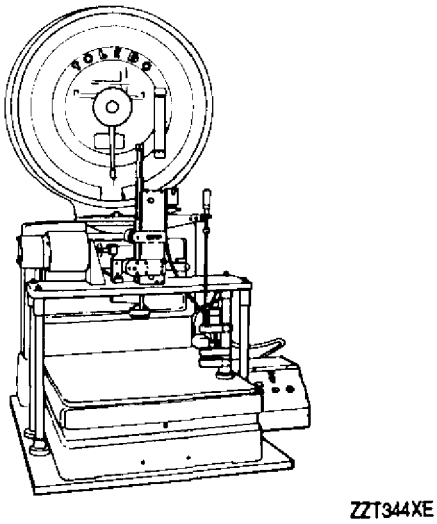

Figure 2. 6799676 Spring Tester

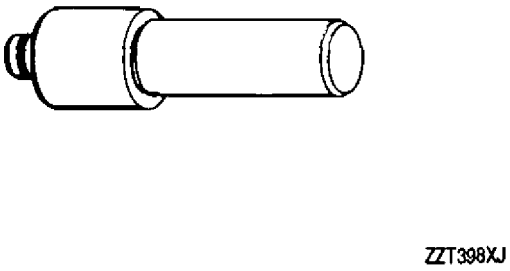

Figure 3. 6799515 Reduction Gear Oil Pump Body and Cover Bushing Installation Drift

(1) Remove pins and bushings.

NOTE

If original dimension of 0.375 in. is decreased below 0.350 in., condemn cover.

(2) Machine to remove all signs of gear scoring and lap to provide a surface that is flat within 0.0005 in. FIR. Keep material removal to a minimum.

(3) Machine the 2.758 − 2.762 in. diameter packing groove to original depth dimensions.

(4) Replace damaged drive gear bushing per figure 7 and the following:

(a) Drill out lock pin and remove damaged bushing. Note location of pin hole in cover.

(b) Install replacement bushing 0.002 − 0.006 in. below cover face surface.

(c) Machine bushing ID 0.5005−0.5010 in. maintaining squareness to cover face within 0.0005 in. FIR. Machine 45° X 0.020 − 0.030 in. lead−in chamfer in bushing after installation.

(d) Drill 0.0600 − 0.0620 in. diameter hole 0.156 in. deep. Locate center of hole 0.120 in. from cover face and 20−30° from existing pin hole in cover.

(e) Select pin for interference fit. Install pin and stake over slightly.

(f) Using existing 0.062 diameter hole in cover, drill thru wall of new bushing to a depth of 0.630 in. per section E−E, figure 7.

(5) Machine oil slot between bushings (figure 7).

10. Pump Body Repair.

Support Equipment Required

Part No./Type Designation	Nomenclature
——	Indicator, dial
——	Wrench, torque (0−200 lb. in.)

Materials Required

Specification No./Part No.	Nomenclature
AN122692	Pin (1)
ASTM D740−8	Methyl−ethyl−ketone
Loctite, Type AA	Compound, retaining
QQ−A−225/8	Aluminum alloy 6061
6845267 −1,−2, −3 or −4	Sleeve, replacement

a. If seal boss ID in oil filter cavity of pump body (12, figure 1) exceeds 0.751 in., or scoring and grooving exist which would permit seal leakage, repair seal boss as follows:

(1) Machine pump body per figure 9.

(2) Manufacture a bushing per figure 10.

(3) OD of bushing (Diameter B, figure 10) is determined by Diameter A (figure 9). An interference fit of 0.0007−0.0013 in. is required.

(4) Install bushing and finish machine to dimensions shown (figure 11).

b. Gear pocket end repair − TO BE DETERMINED.

c. Remove loose pin (32, figure 1). Clean pin hole in body and replacement pin with methyl−ethyl−ketone. Apply Loctite, Type AA retaining compound to pin. Install and seat pin, pin projection shall be 0.170 − 0.190 in.

d. If oil inlet mounting pad is scratched or scored, repair pad as follows:

(1) Remove studs.

(2) Machine minimum amount necessary to clean up; do not exceed 0.0025 in. stock removal.

(3) Reinstall studs. Drive torque shall be 50−100 lb. in. (QA)

e. Pump body flanges that are scored excessively may be machined in increments not to exceed 0.003 in. Machine only enough to clean up surface.

(1) Pump body shall not be machined below 4.525 in. over−all length.

(2) Filter cavity dimension of 2.464 − 2.469 in. shall be maintained (figure 11).

(3) After machining pump assembly, idler gear shaft bushing well shall be a minimum of 0.395 in. deep.

(4) Use surface plate and dial indicator to measure pump body prior to machining. (Do not use a hand micrometer.)

f. Replace damaged or loose bypass valve sleeve by pressing in a new sleeve. Select replacement sleeve for a 0.001 − 0.003 in. interference fit with pump body.

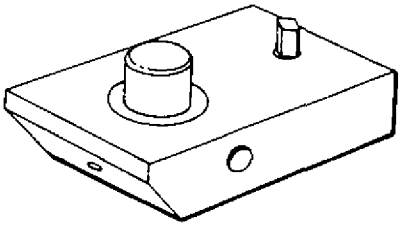

ZZT399XJ

Figure 4. 6795913 Reduction Gear Oil Pump Cover Bushing Lockpin Hole Drill Jig

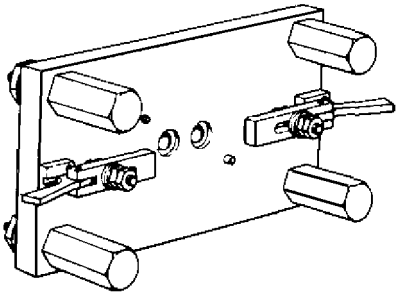

ZZT401XH

Figure 6. 6799516 Reduction Gear Oil Pump Cover Ream Jig

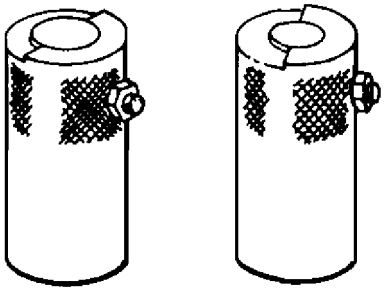

ZZT400XH

Figure 5. 6795914 and 6795915 Reduction Gear Oil Pump Bushing Countersink Depth Flush Pin Gage (Large and Small)

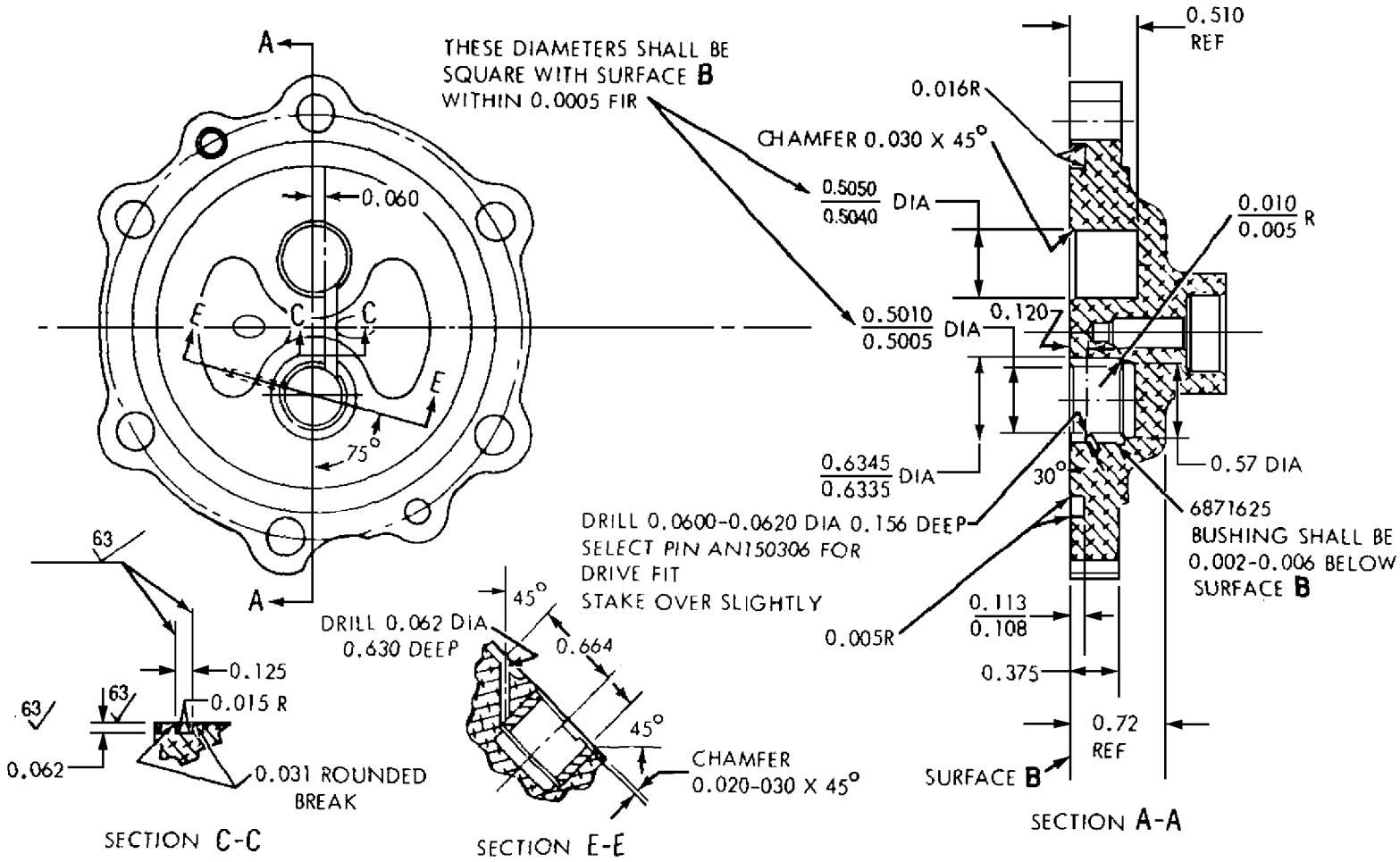

Figure 7. Bushing Replacement in Reduction Gear Oil Pump Cover

MGD086XB

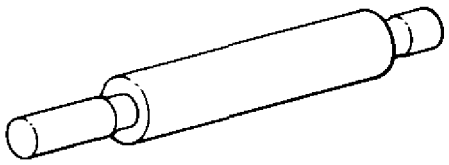

ZZT402XJ

Figure 8. 6799594 Reduction Gear Oil Pump Body and Cover Bushing Go−No Go Gage (Small)

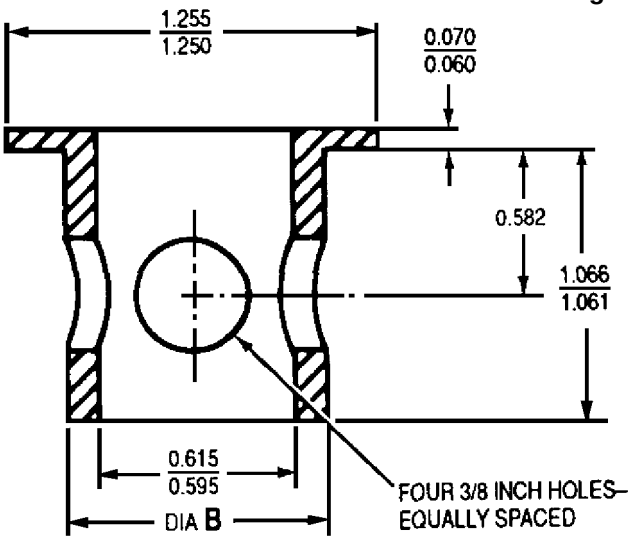

MATERIAL: SPEC QQ – A – 225/8

MLD131XG

Figure 10. Reduction Gear Oil Pump Filter Cavity Bushing Machining Limits

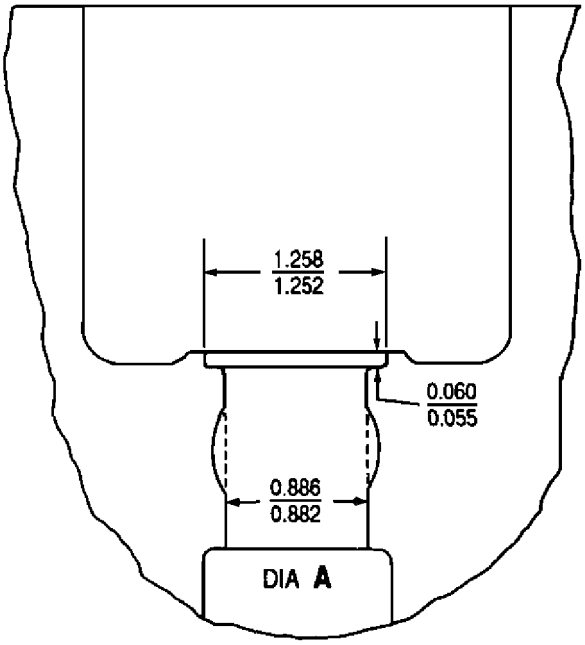

MLD130XG

Figure 9. Reduction Gear Oil Pump Filter Cavity Machining Limits

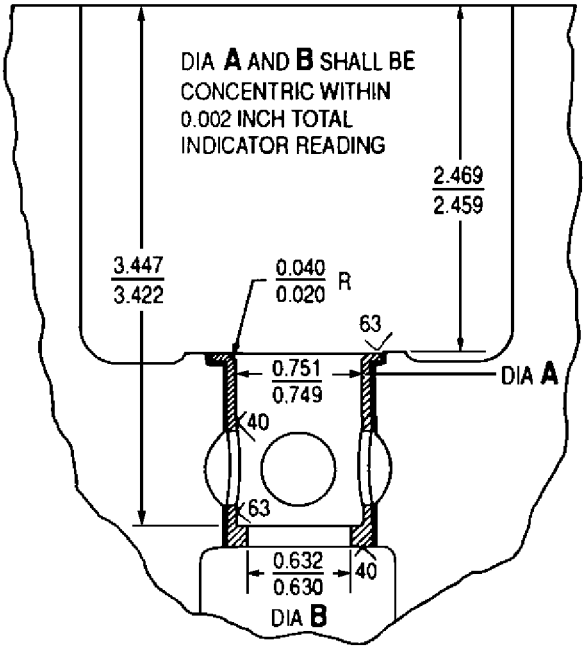

MLD132XG

Figure 11. Reduction Gear Oil Pump Filter Cavity Repair Limits

11. Drive Gear, Idler Gear, and Bushing Replacement.

Support Equipment Required

Part No./Type Designation	Nomenclature
6795908	Drift, installation, reduction gear main oil pump body (large bushing)
6795914	Gage, depth, flush pin, reduction gear oil pump bushing countersink (large bushing)
6795915	Gage, depth, flush pin, reduction gear oil pump bushing countersink (small)
6796753	Fixture, lathe, oil pump gear bushing rework
6799517	Jig, ream, reduction gear oil pump body
6799593	Gage, go−no go, reduction gear oil pump body bushing (large)
6799594	Gage, go−no go, reduction gear oil pump body and cover bushing (small)
6872246	Drift, reduction gear oil pump body flanged bushing
6872253	Jig, drill, reduction gear oil pump flanged bushings lockpin hole
6872254	Jig, drill, oil pump flanged bushings lockpin hole

Materials Required

Specification No./Part No.	Nomenclature
AN150208	Pin (1)
6871626	Bushing, stepped sleeve (1)

a. Replace damaged drive gear bushing (13, figure 1) as follows:

(1) Drill out lock pin (14).

NOTE

Bushing (13) may be removed without removing dowel (15). The 6795908 drift can be used to hold and guide the bushing out through the dowel ID.

(2) Remove bushing from body. Note location of lock pin hole in body.

(3) Install replacement bushing (13) using 6795908 drift.

(4) Install body (12) in 6799517 ream jig (figure 14) and finish bushing to dimensions shown (figure 12). Check bushing ID using 6799593 gage (figure 15). Check countersink using gage 6795914 (figure 5).

(5) Drill lock pin hole and install pin as shown (figure 12). Locate hole 20 − 30° away from existing hole.

(6) Install body in 6796753 lathe fixture (figure 17) and machine preformed packing groove to dimensions and concentricity shown (figure 12).

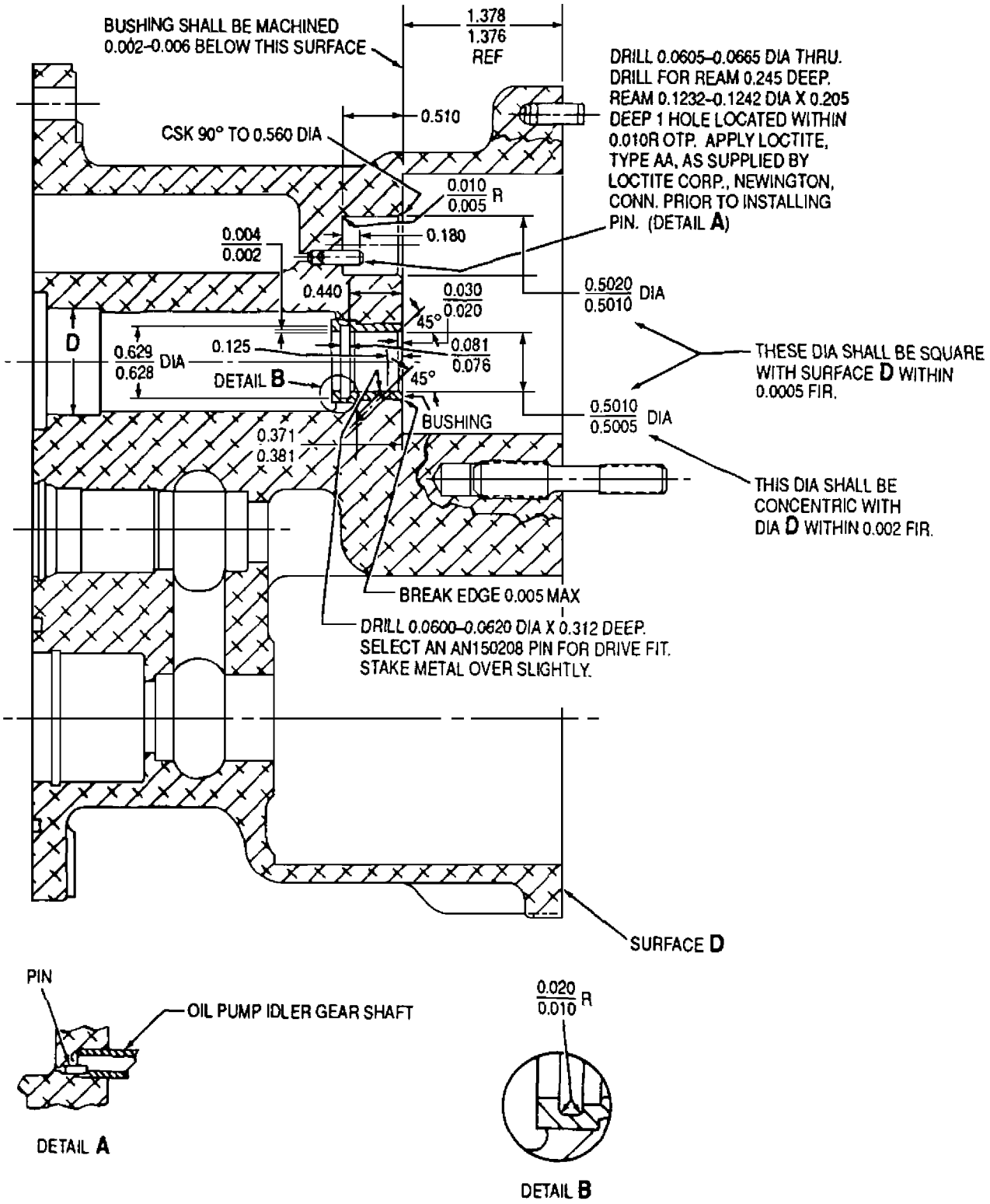

Figure 12. Reduction Gear Oil Pump Body Repair

MLD163XA

12. REDUCTION GEAR OIL PUMP ASSEMBLY − ASSEMBLY.

Support Equipment Required

Part No./Type Designation	Nomenclature
6799838	Wrench, spanner, reduction gear oil pump pressure adjusting valve threaded bushing
——	Wrench, torque (0−150 lb. in.)
——	Wrench, torque (0−750 lb. in.)

Materials Required

Specification No./Part No.	Nomenclature
AS3085−006	Packing, preformed (1)
AS3085−015	Packing, preformed (1)
AS3085−022	Packing, preformed (1)
AS3085−230	Packing, preformed (1)
MIL−PRF−23699	Oil, lubricating
MS20995C20	Lockwire

a. Dimensional limits shall be as shown in table 1.

Lubricating Oil, MIL−PRF−23699 **2**

b. Apply MIL−PRF−23699 oil to gears, bores, shafts, and all parts of check valve assembly.

c. Reassemble pump using figure 1 as a guide.

d. Using 6799838 wrench, (figure 18) torque bushing (3, figure 1) 300 − 500 lb. in. and nuts (6) 70 − 85 lb. in. to values given in table 2. (QA)

Table 1. Dimensional Limits

Location	Min.	Max.
Check valve guide—Body	0.0010L	0.0080L
By−pass valve sleeve—Body	0.0030T	0.0001L
Drive gear—Body bushing	0.0020L	0.0040L
Bushing—Body	0.0040T	0.0005T
Drive and idler gears to body (end clearance)	0.0020	0.0040
Bushing—Cover	0.0030T	0.0005T
Idler gear—Body bushing	0.0020L	0.0040L

e. Pump should turn freely by hand after reassembly. If not, loosen nuts and rotate pump drive when torquing nuts.

f. Lockwire threaded bushing to lug on cover using MS20995C20 lockwire.

13. REDUCTION GEAR OIL PUMP ASSEMBLY − TESTING.

Support Equipment Required

Part No./Type Designation	Nomenclature
7057	Stand Assembly, test, lube and scavenge pump
7059	Adapter, test oil pump
——	Filter, slave
——	Fixture, Special test shaft, reduction gear oil pump
——	Wrench, torque (0−150 Ib. in.)

Materials Required

Specification No./Part No.	Nomenclature
MIL−PRF−23699	Oil, lubricating
MS20995C20	Lockwire

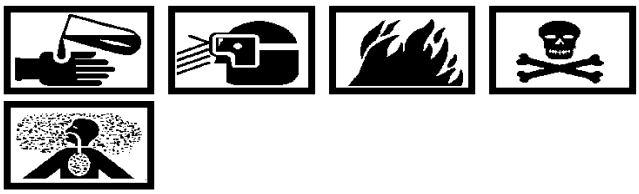

Lubricating Oil, MIL−PRF−23699 2

a. Use MIL−PRF−23699 oil at 75 − 105°F (24 − 41°C).

b. Install pump and fixture on 7079 test adapter (figure 19) and 7057 test stand (figure 20). Cap fitting on special test shaft fixture (figure 21). Install fixture in filter cavity on pump.

CAUTION

Do not operate pump against a “deadhead.”

c. Operate pump at a sufficient rpm to ensure flow out of pump. This is to check opening of bypass valve.

d. Remove special test shaft fixture and install a slave filter assembly.

e. Operate pump at 4185 − 4205 rpm with outlet restriction valve adjusted to obtain 175 − 185 psig discharge pressure. Inlet pressure to be 1−2 psig. Run for five minutes.

NOTE

A factor of 0.032 gpm per degree F (C) of oil temperature over 75°F (24°C) shall be added to actual oil flow of pump. For example; an 18.0 gpm flow at 85°F (29°C) oil temperature will give a corrected flow of 18.32 gpm.

f. Minimum pump flow shall be 18.3 gpm with pressure adjusting valve fully closed.

g. After checking pump at 18.3 gpm, readjust flow rate to 16.5 gpm and lock adjustment. Torque nut 70 − 85 lb. in. lockwire nut to lock using MS20995C20 lockwire. (QA)

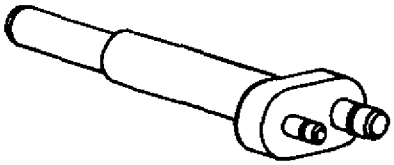

ZZT403XJ

Figure 13. 6872246 Reduction Gear Oil Pump Body Flanged Bushing Drift

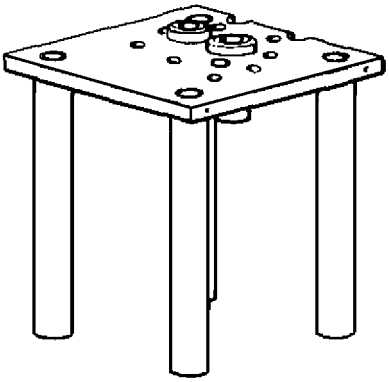

ZZT405XJ

Figure 14. 6799517 Reduction Gear Oil Pump Body Ream Jig

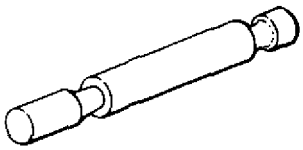

ZZT407XJ

Figure 15. 6799593 Reduction Gear Oil Pump Body Bushing Go−No Go Gage (Large)

h. Check for leaks. There shall be no external leakage at splitlines. Some leakage is permissible at pump to stand splitline flange.

i. Remove slave filter and install special test shaft fixture in filter cavity (figure 21). Apply oil at three psig to fixture for a minimum of three minutes. This will check the check valve for leakage. There shall be no leakage through valve at pump outlet.

j. Check slave filter for metal pickup. If metal chips are observed, reinspect pump gears and gear pockets.

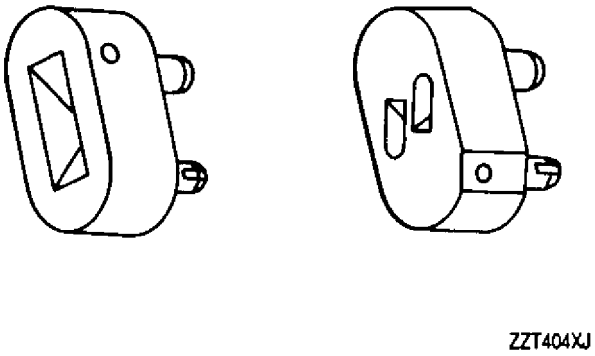

Figure 16. 6872253 and 6872254 Oil Pump Flanged Bushing Lockpin Hole Drill Jigs

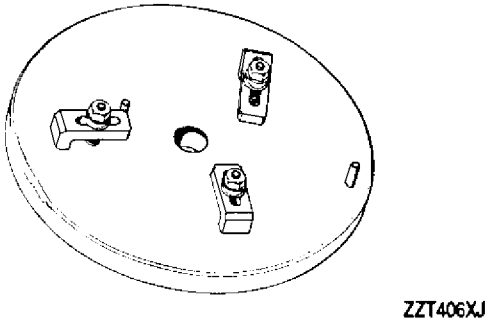

Figure 17. 6796753 Oil Pump Gear Bushing Rework Lathe Fixture

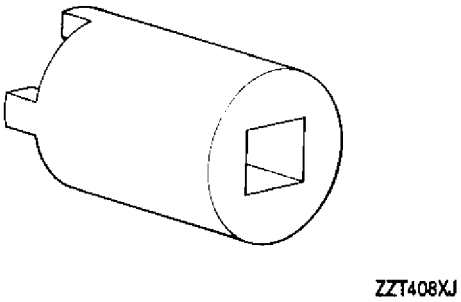

Figure 18. 6799838 Reduction Gear Oil Pump Pressure Adjusting Valve Threaded Bushing Spanner Wrench

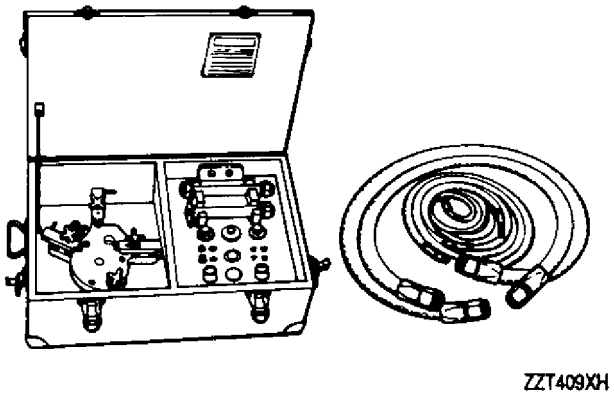

Figure 19. 7079 Oil Pump Test Adapter

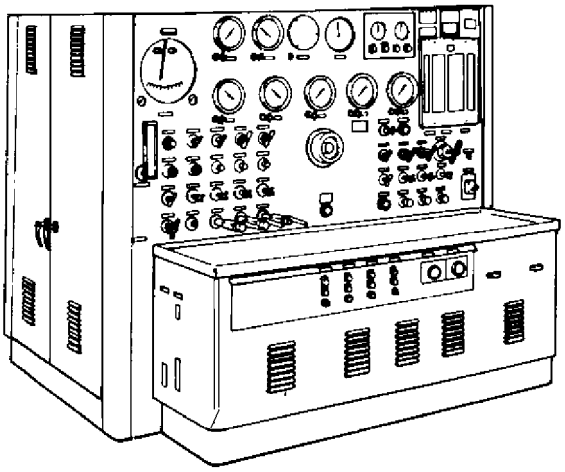

Figure 20. 7057 Lube and Scavenge Pump Test Stand Assembly

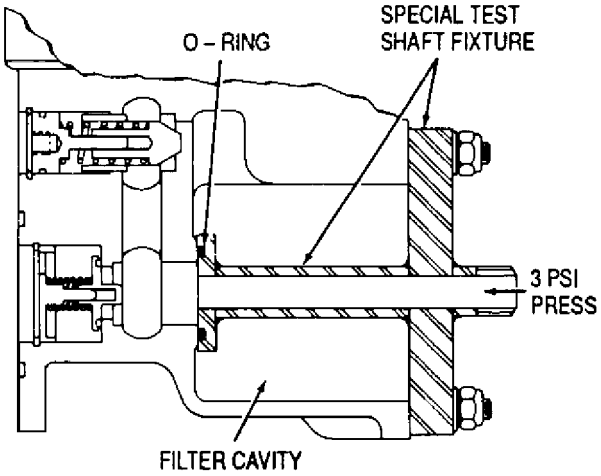

Figure 21. Reduction Gear Oil Pump Special Test Shaft Fixture

DEPOT MAINTENANCE

CLEANING, DISASSEMBLY, INSPECTION, REPAIR, AND ASSEMBLY

REDUCTION GEAR OIL FILTER

Reference Material

None

Alphabetical Index

Subject	Page No.
Introduction	2
Reduction Gear Oil Filter	2
Assembly	3
Cleaning	2
Disassembly (Non PPC−115)	2
Disassembly (PPC−115)	2
Inspection and Repair	2

Record of Applicable Technical Directives

Type/No.	Date	Title and ECP No.	Date Inc.	Remarks
PPC−115	−−−	15 Micron Oil Filter	13 Jun 97	——

1. **INTRODUCTION.**

2. This work package (WP) provides the instructions for disassembly, cleaning, inspection, repair, and assembly of the reduction gear oil filter used on the T56−A−427 turboprop engine.

3. **REDUCTION GEAR OIL FILTER.**

4. REDUCTION GEAR OIL FILTER − DISASSEMBLY. (PPC−115 NINC)

Support Equipment Required

Part No./Type Designation	Nomenclature
6796891	Adapter, torque, reduction gear filter

a. Remove parts using figure 1 as a guide. Use 6796891 adapter (figure 3) to remove perforated tube (1, figure 1).

5. REDUCTION GEAR OIL FILTER − DISASSEMBLY. (PPC−115 INC)

CAUTION

The stem and screen assembly is an integral unit. Do not disassemble.

a. Remove the filter element (3, figure 2) from stem and screen assembly (1) and discard element (3) and both packings (2).

b. Remove packing (7) from stem and screen assembly (1) and discard.

6. REDUCTION GEAR OIL FILTER − CLEANING.

a. Discard filter packs or pleated elements.

b. Clean all remaining parts of filter with an approved solvent.

c. Clean and thoroughly rinse all passages.

7. REDUCTION GEAR OIL FILTER − INSPECTION AND REPAIR.

Support Equipment Required

Part No./Type Designation	Nomenclature
——	Torch, oxy−acetylene
——	Tip, torch, 00

Materials Required

Specification No./Part No.	Nomenclature
AMS 4770	Wire, Braze
AMS 3410	Flux
O−A−51	Acetone
——	Stop−off, green (CAGE 63585)

a. Inspect mounting face of cover (7, figure 1, PPC−115 NINC, or 6, figure 2, PPC−115 INC) for nicks, dents, gouges and scratches.

b. Cover is acceptable providing no portion of cover is broken out and depth of any nick, dent, gouge or scratch does not exceed 1/2 depth of preformed packing groove.

c. There must not be any damage to bottom (sealing surface) of preformed packing groove.

d. Lap or polish as required to remove build−up and sharp edges.

e. Inspect perforated tube (1, figure 1) for loose or unbonded screen ends. (PPC−115 NINC)

f. Repair loose screen ends on perforated tube as follows (PPC−115 NINC):

Acetone O−A−51 **61**

(1) Clean in acetone, O−A−51 and allow to dry.

(2) Apply green stop−off on preformed packing flange adjacent to the area to be brazed.

CAUTION

When heating part for brazing, torch should be moved continuously across part and below and joint to be brazed. Do not hold flame on wire mesh or in any local spot at any time during preheating or brazing. Uniform heating is necessary to attain dimensional stability of part.

(3) Braze using oxy−acetylene torch with 00 tip size. Use AMS 4770 1/16 in. dia braze wire and AMS 3410 flux.

(4) Allow part to cool prior to removing flux.

(5) Boil in water for a minimum of 20 minutes to remove flux.

(6) Remove green stop−off with a soft bristle wire brush.

(7) Braze alloy should uniformly fill open mesh area.

Acetone O−A−51 **61**

(8) Rinse in acetone prior to assembly.

g. No damage is allowed in differential pressure indicator groove. (PPC−115 INC)

8. REDUCTION GEAR OIL FILTER − ASSEMBLY.

Support Equipment Required

Part No./Type Designation	Nomenclature
6796891	Adapter, torque, reduction gear filter (PPC−115 NINC)

Materials Required

Specification No./Part No.	Nomenclature
MS20995C32	Lockwire
MIL−PRF−23699	Oil, lubricating

CAUTION

Use only spacers (2, figure 1) fabricated from corrosion resistant steel. Correct spacers are magnetic and 0.060 in. thick (figure 4) (PPC−115 NINC)

a. Assemble reduction gear oil filter using figure 1 (PPC−115 NINC) as a guide and instruction as follows:

(1) Install preformed packing (8) and plug (9). Torque plug to 60−68 lb. in. (QA)

(2) Install a filter element (5) or, starting with a filter pack (3), alternately place filter pack and spacer (2) on perforated tube (1).

CAUTION

Excessive torque will cause filter packs to collapse.

CAUTION

Do not exceed maximum torque specified.

(3) Place preformed packings (6 and 11) on perforated tube and install it in cover (7). Torque to 20 − 30 lb. in. using 6796891 adapter (figure 3), and lockwire tube plug and cover (12, figure 1). After tightening, make sure filter packs (4) are secure. Looseness indicates a collapsed filter pack. (QA)

(4) Check filter pack measurement from rear face to cover to a point nearest I.D. on rear face of last filter pack (figure 4).

b. Assemble reduction gear oil filter using figure 2 (PPC−115 INC) as a guide and instruction as follows:

Lubricating Oil, MIL−PRF−23699 **2**

(1) Lubricate all preformed packings with MIL−PRF−23699.

(2) Install oil filter element (3, figure 2) and two packings (2) on stem and screen assembly (1).

(3) Install packing (8) on stem and screen assembly (1).

(4) Install stem and screen assembly (1) in filter cover (6). Hand tighten.

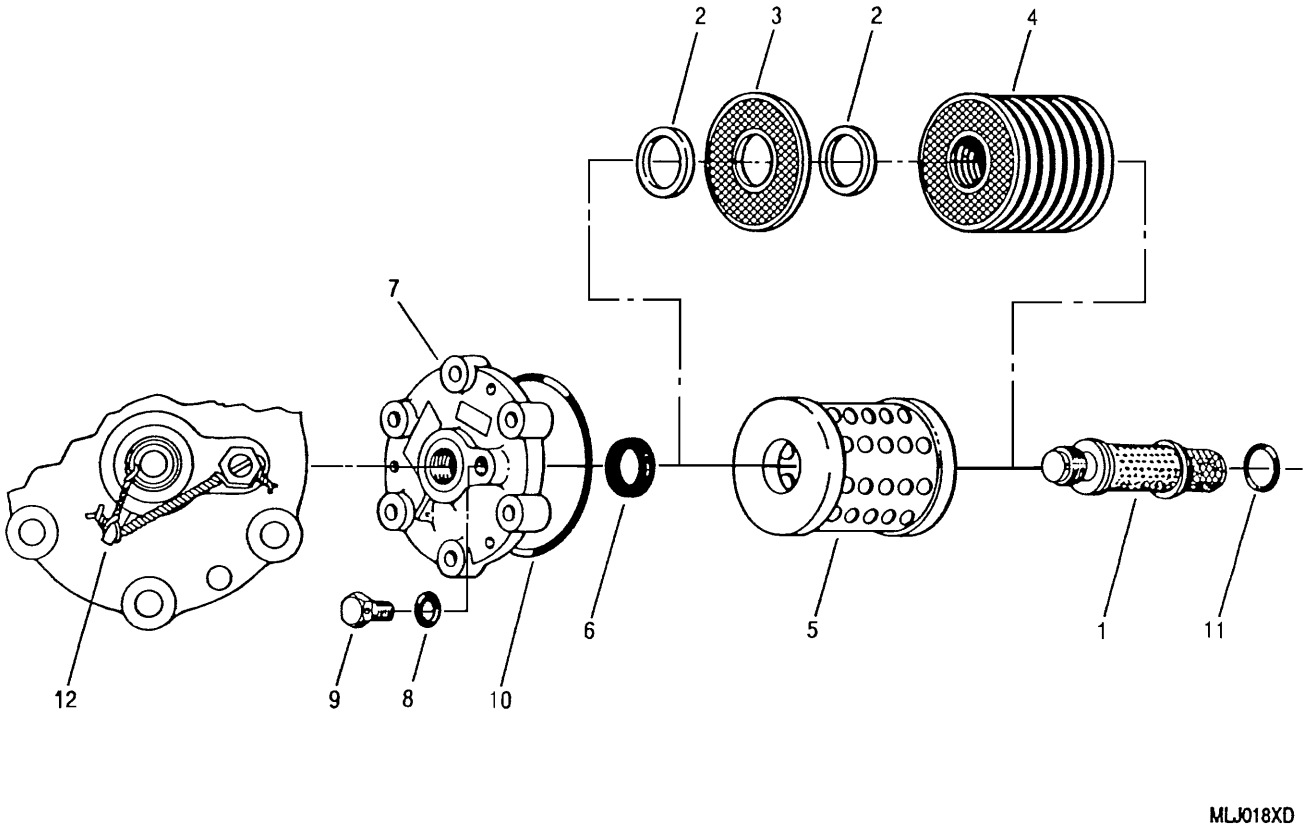

1.	Perforated Tube	5.	Filter Element	9.	Plug
2.	Spacers (13)	6.	Preformed Packing	10.	Preformed Packing
3.	Filter Pack (13)	7.	Cover	11.	Preformed Packing
4.	Filter Packs	8.	Preformed Packing	12.	Lockwire Details

Figure 1. Reduction Gear Oil Filter (PPC−115 NINC)

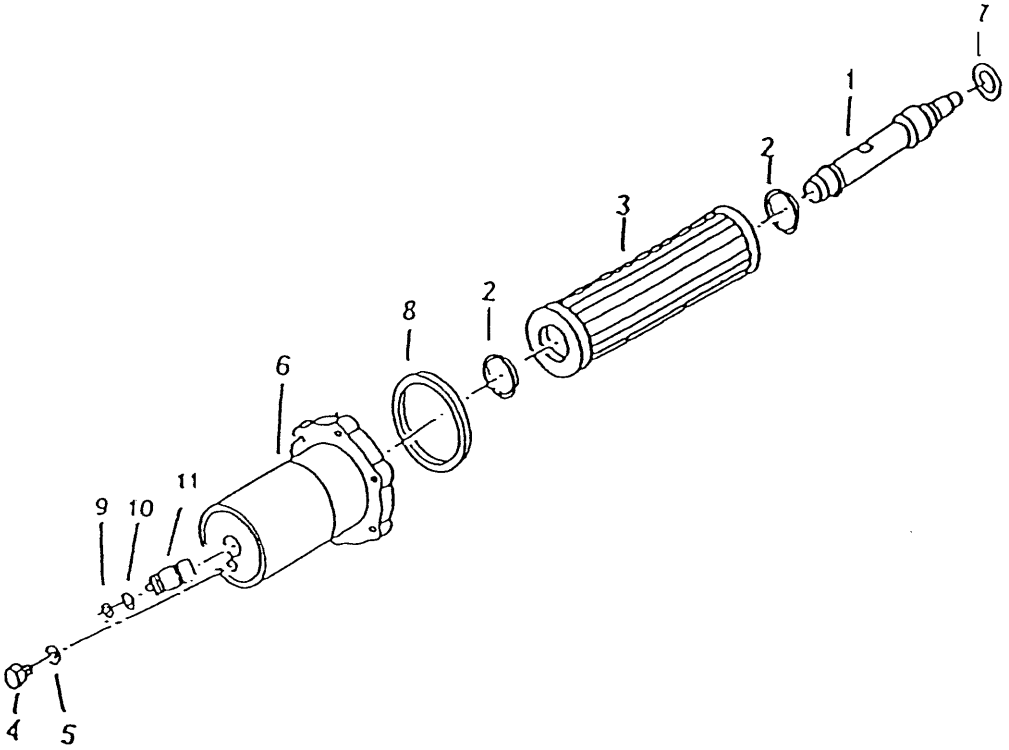

1. Stem and Screen Assembly
2. Preformed Packing
3. Filter Element
4. Drain Plug
5. Preformed Packing
6. Cover
7. Preformed Packing
8. Preformed Packing
9. Snap Ring
10. Washer
11. Differential Pressure Indicator

Figure 2. Reduction Gear Oil Filter (PPC−115 INC)

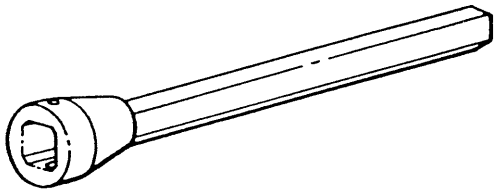

Figure 3. 6796891 Reduction Gear Filter Torque Adapter (PPC−115 NINC)

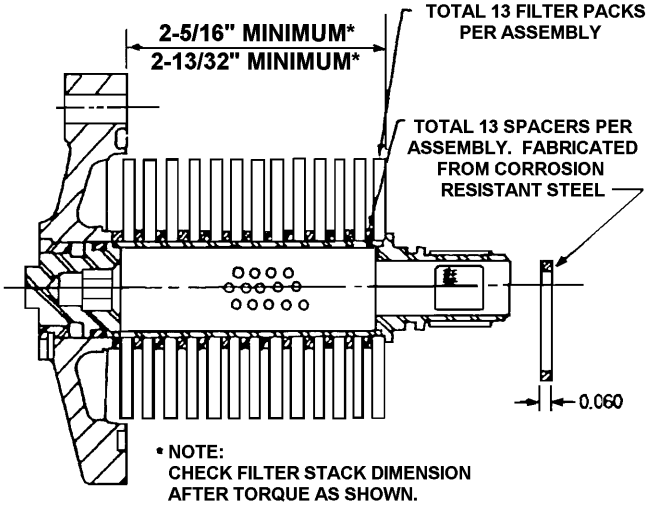

Figure 4. Reduction Gear Oil Filter Pack Dimension (PPC−115 NINC)

DEPOT MAINTENANCE

DISASSEMBLY, INSPECTION, REPAIR, AND ASSEMBLY

REDUCTION GEAR MAIN SCAVENGE OIL PUMP

Reference Material

None

Alphabetical Index

Subject **Page No.**

Introduction 2
Reduction Gear Main Scavenge Oil Pump 2
Assembly 6
Disassembly 2
Inspection and Repair 2
Test 6

Record of Applicable Technical Directives

None

1. **INTRODUCTION.**

2. This work package (WP) provides the instructions for disassembly, inspection, repair, and assembly of the reduction gear main scavenge oil pump used on the T56−A−427 turboprop engine.

3. **REDUCTION GEAR MAIN SCAVENGE OIL PUMP.**

4. REDUCTION GEAR MAIN SCAVENGE OIL PUMP − DISASSEMBLY.

a. Remove parts using figure 1 as a guide.

5. REDUCTION GEAR MAIN SCAVENGE OIL PUMP − INSPECTION AND REPAIR.

Materials Required

Specification No./Part No.	Nomenclature
AN150306	Pin

a. Inspect body assembly (6, figure 1) and plate (1) for wear in bearing bores.

NOTE

Bore and boss machining operations in steps b. (1) and c. (3) apply only to body and plate assemblies in which bushings have not been installed.

b. Repair body assembly as follows:

(1) Rework body assembly by increasing bore 0.687 − 0.688 in. and machine the boss to give a body height of 1.357 − 1.360 in. (step 1, figure 2). Maintain original bore centerline.

(2) Install 6723227 bushing (11, figure 1) in body assembly. Bushing must have a 0.0015 − 0.003 in. tight fit in body bore. Freeze bushing before installing. Drill a 0.060 − 0.062 in. diameter hole 0.156 in. deep. Select an AN150306 pin for a drive fit and stake before finish machining (step 2, figure 2). Finish machine to dimensions shown.

(3) Machine grooves in bushing as necessary to dimensions in step 3, figure 2.

c. Repair plate (1, figure 1) as follows:

(1) Light wear and/or scoring on Surface B (figure 3) of less than 0.003 in. is acceptable.

(2) Any wear and/or scoring in excess of 0.003 in. may be machined and finish lapped. After lapping, Surface B to Surface G dimension must not be less than 0.144 in.

(3) Rework plate by increasing bore to 0.4995 − 0.5005 in. and machine boss to give plate a thickness of 0.310 − 0.315 in. (step 1, figure 3). Maintain original bore centerline.

(4) Install 6871659 bushing (12, figure 1) in plate assembly. Bushing must have a 0.001 − 0.003 in. tight fit in plate bore. Freeze bushing before installing. Drill a 0.060 − 0.062 in. diameter hole 0.156 in. deep. Select an AN150306 pin for a drive fit and stake before finish machining (step 2, figure 3). Finish machine to dimensions shown.

(5) Machine grooves in bushing as necessary to dimensions in step 3, figure 3.

d. Inspect idler gear (4, figure 1) and bushing (5) for wear and scoring.

(1) Maximum ID without scoring is 0.627 in.

(2) Scoring in ID shall not exceed 0.006 in. in depth and at least 75% of circumferential ID area shall not exceed 0.627 in.

(3) Bushings exceeding limits of either steps (1) or (2) can be replaced by pressing or cutting out worn bushing; freeze and press in a new bushing. Be sure one end of bushing is 0.010 − 0.020 in. below end face of gear. Ream ID of bushing to 0.6250 − 0.6255 in. and concentric with OD of gear teeth within 0.001 in. FIR.

e. Inspect gear pump bore pocket side and bottom for wear or scoring. Replace bodies if wear and scoring exceeds 0.003 in. deep provided the pattern extends completely around bottom or side of bore surfaces of pocket. Maximum depth of gear pockets is 1.001 in.

f. Inspect scavenge oil pump plate as follows: (figure 3)

(1) No scoring on Surface H of the 0.748 − 0.749 in. diameter boss is allowed.

(2) Wear or scoring shall be removed by machining. Thickness of plate in boss area shall not be less than 0.365 in. Reestablish oil slots. Surface H shall be parallel with bottom of plate within 0.002 in. FIR. Install bushing (12, figure 1) per figure 3 if limits are exceeded.

(3) After assembly of pump and drive gear, drive gear end play must not exceed 0.023 in. Parts shall be selected as necessary to meet this limit.

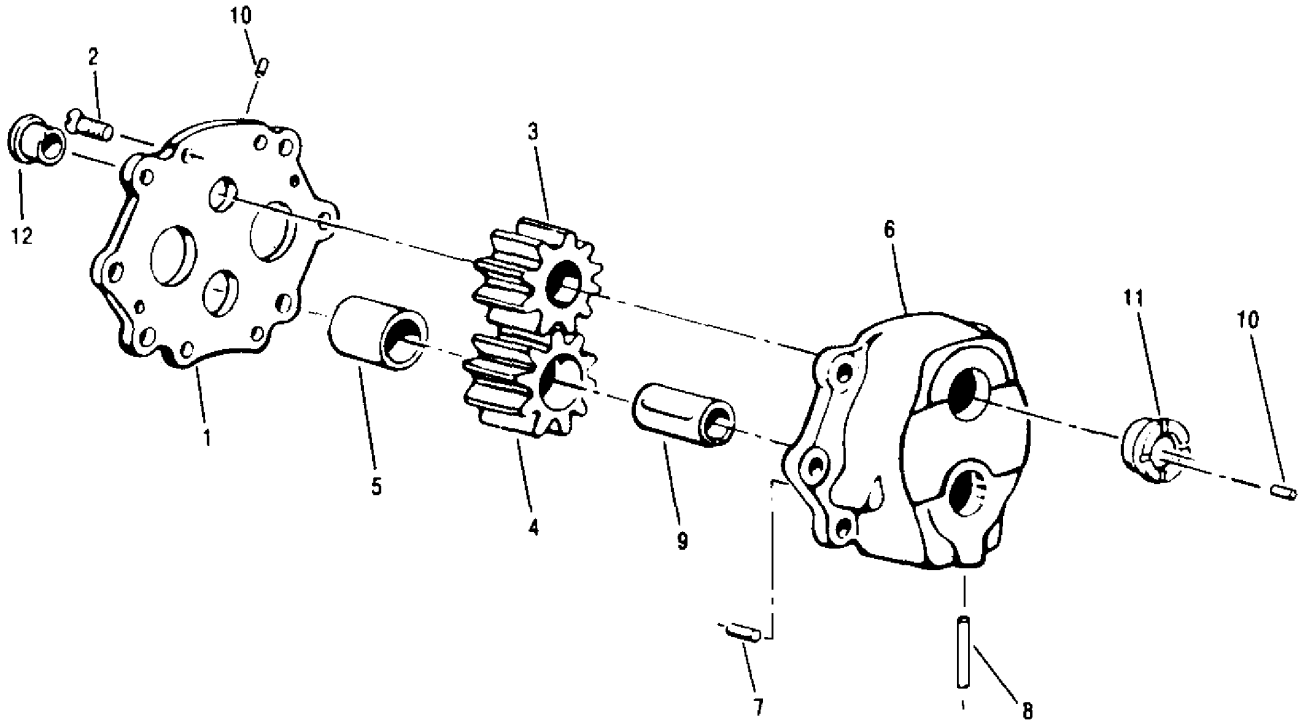

MGD045XD

1. Plate
2. Screw
3. Drive Gear
4. Idler Gear
5. Bushing
6. Body Assembly
7. Pin
6. Lock Pin
9. Idler Shaft
10. Pin (2)
11. Bushing (Service Replacement)
12. Bushing (Service Replacement)

Figure 1. Reduction Gear Main Scavenge Oil Pump

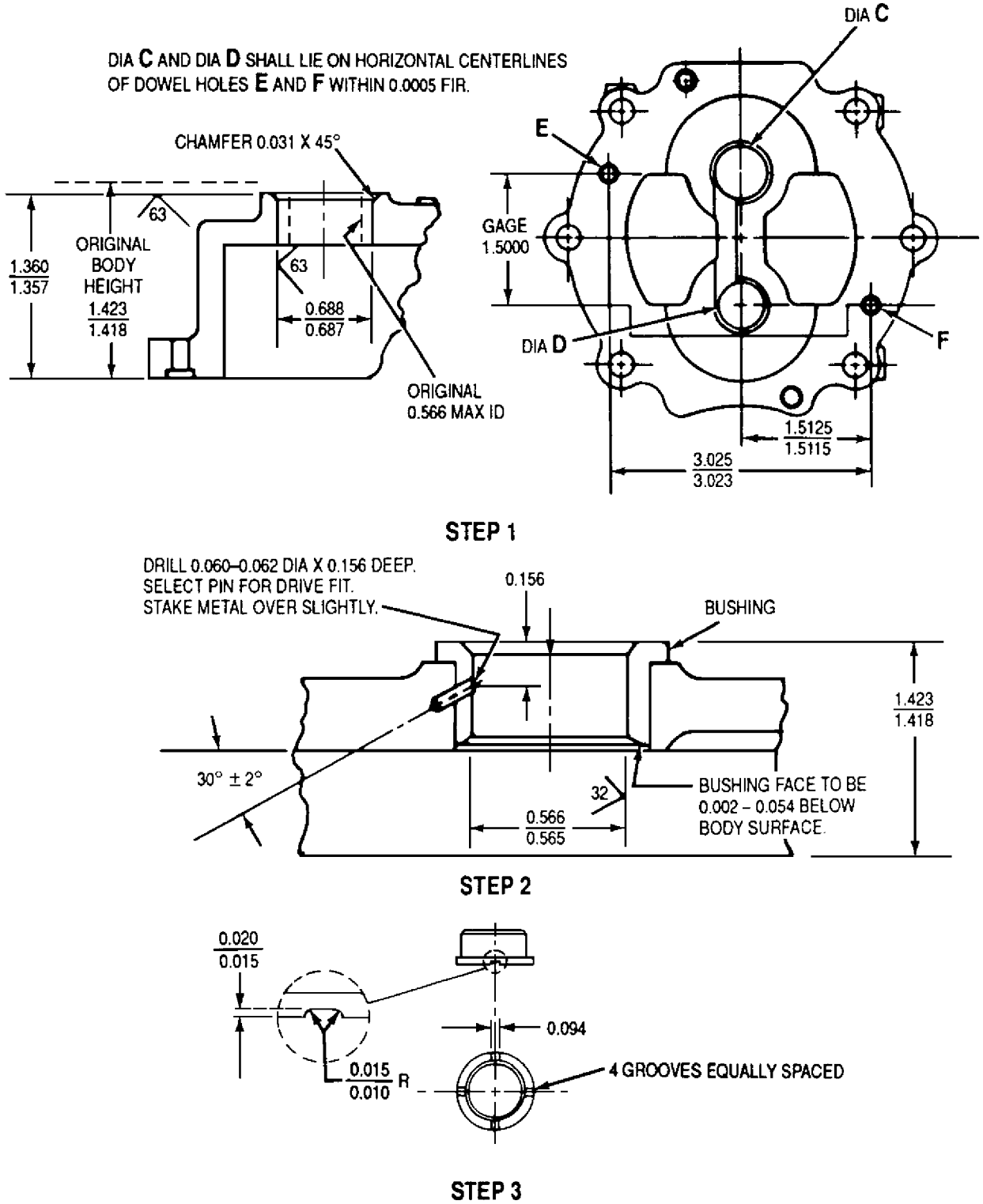

Figure 2. Repair of Main Scavenge Oil Pump Body

MLJ044XA

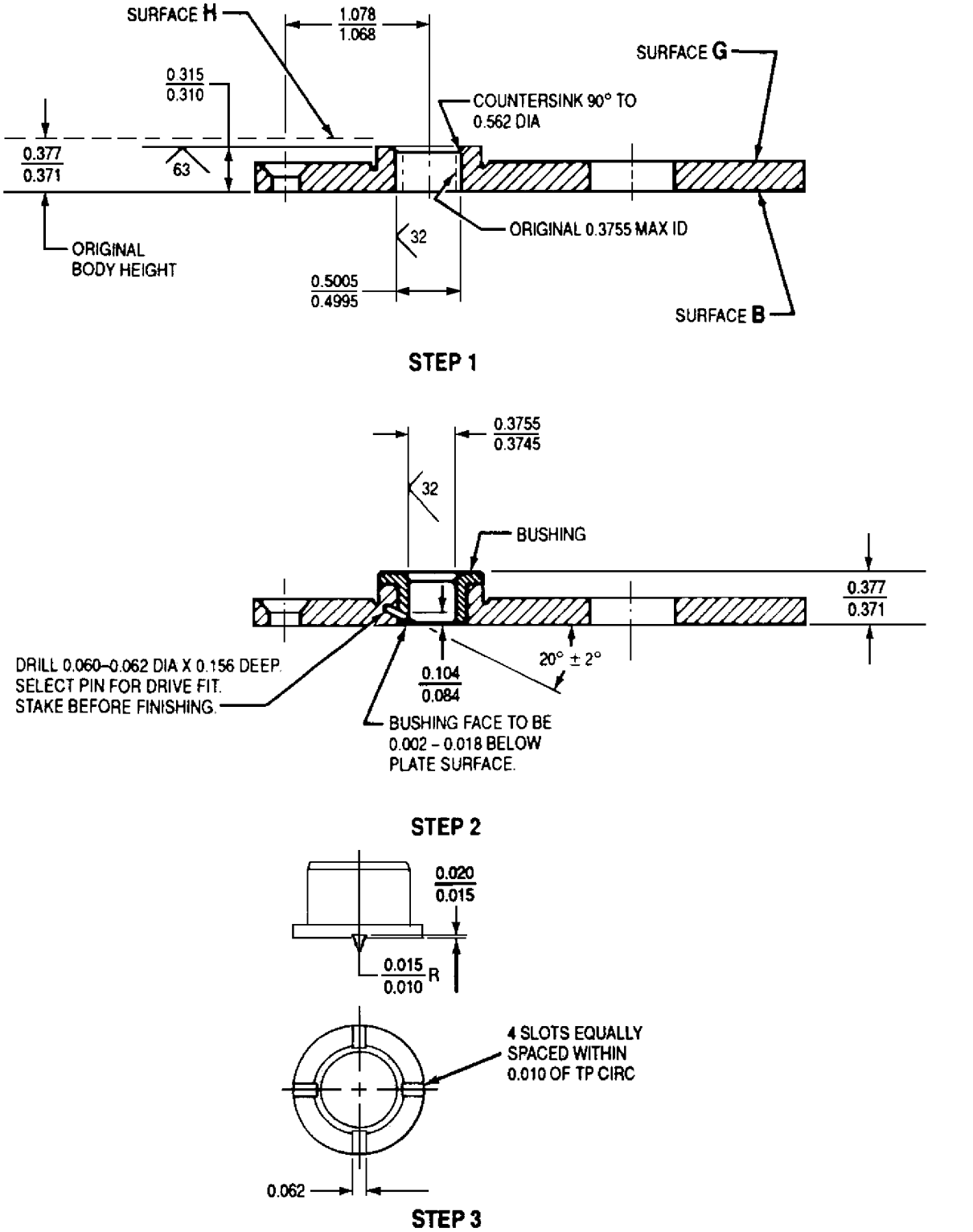

Figure 3. Repair of Main Scavenge Oil Pump Plate

6. REDUCTION GEAR SCAVENGE OIL PUMP − ASSEMBLY.

Support Equipment Required

Part No./Type Designation	Nomenclature
——	Wrench, torque (0−25 lb in.)

Materials Required

Specification No./Part No.	Nomenclature
MIL−PRF−23699	Oil, lubricating

a. Dimensional limits shall be as shown in table 1.

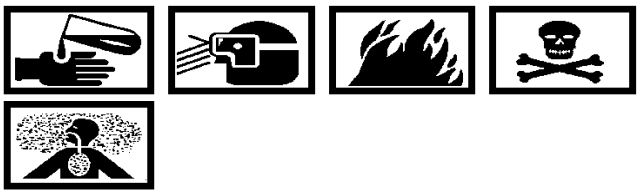

Lubricating Oil, MIL−PRF−23699 2

b. Apply MIL−PRF−23699 oil to gears, bores, and shafts.

c. Reassemble pump using figure 1 as a guide.

d. Torque screws (2, figure 1) to 15−20 lb. in. (QA)

e. Pump should turn freely by hand after reassembly. If not, loosen screws and rotate pump drive when torquing screws.

7. REDUCTION GEAR SCAVENGE OIL PUMP − TEST.

Support Equipment Required

Part No./Type Designation	Nomenclature
7057	Stand, test, lube and scavenge oil pump
23030254	Fixture, test, scavenge oil pump

Materials Required

Specification No./Part No.	Nomenclature
MIL−PRF−23699	Oil, lubricating

a. Install pump and 23030254 test fixture on 7057 test stand.

CAUTION

Do not run the pump in a “deadhead” condition.

Lubricating Oil, MIL−PRF−23699 2

b. Using MIL−PRF−23699 lubricating oil at 75 − 105°F (24 − 41°C) as a test medium, run the pump at 3820 − 3920 RPM for 10 minutes.

c. Adjust bench outlet restriction to 40 − 45 psig at 3820 − 3920 RPM and measure pump flow. Minimum pump flow for the main scavenge and nose scavenge pumps shall be 23.6 GPM.

d. Visually inspect pump for external leakage. No external leakage is acceptable.

e. Remove pump from test stand and cover all openings to prevent the entrance of foreign material.

Table 1. Dimensional Limits

Location	Min.	Max.
Idler Shaft−Idler gear bushing	0.0015L	0.0050L
Drive gear shaft−Bushing (Plate)	0.0010L	0.0050L
Drive gear shaft−Bushing (Body)	0.0010L	0.0050L
Drive gears−Pump gear	0.0005L	0.0030L
Gear−End clearance (two places)	0.0020	0.0040

DEPOT MAINTENANCE

DISASSEMBLY, INSPECTION, ASSEMBLY, AND TESTING

REDUCTION GEAR OIL PRESSURE RELIEF VALVES

Reference Material

None

Alphabetical Index

Subject **Page No.**

Introduction 2
Reduction Gear Oil Pressure Relief Valves 2
Assembly 2
Disassembly 2
Inspection 2
Testing 3

Record of Applicable Technical Directives

None

1. **INTRODUCTION.**

2. This work package (WP) provides the instructions for disassembly, inspection, assembly, and testing of the reduction gear oil pressure relief valve used on the T56−A−427 turboprop engine.

3. **REDUCTION GEAR OIL PRESSURE RELIEF VALVE.**

4. REDUCTION GEAR OIL PRESSURE RELIEF VALVE − DISASSEMBLY.

a. Remove parts using figure 1 for part No. 6781248 and figure 2 for part No. 6842844 as guides.

5. REDUCTION GEAR OIL PRESSURE RELIEF VALVE − INSPECTION.

Support Equipment Required

Part No./Type Designation	Nomenclature
6799676 or equivalent	Tester, spring, 0−150 range, 1/4 pound graduations

a. Using 6799676 tester (figure 3) compress spring (3, figure 1) to length of 0.7812 in. Spring pressure at this compressed length shall be 14.75 − 15.25 pounds.

b. Using 6799676 tester, compress spring (3, figure 2) to length of 0.910 in. Spring pressure at this compressed length shall be 25 − 26 pounds.

6. REDUCTION GEAR OIL PRESSURE RELIEF VALVE − ASSEMBLY.

Materials Required

Specification No./Part No.	Nomenclature
AS3085− 015	Packing, preformed

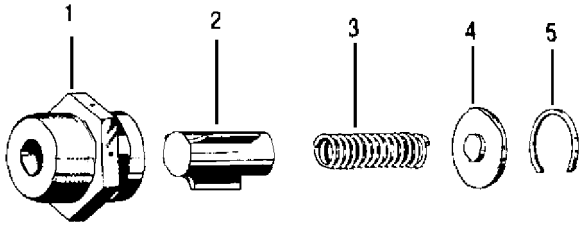

MGJ013XG

1. Body
2. Valve
3. Spring
4. Washer
5. Snap Ring

Figure 1. Reduction Gear Oil Pressure Relief Valve (Part No. 6781248)

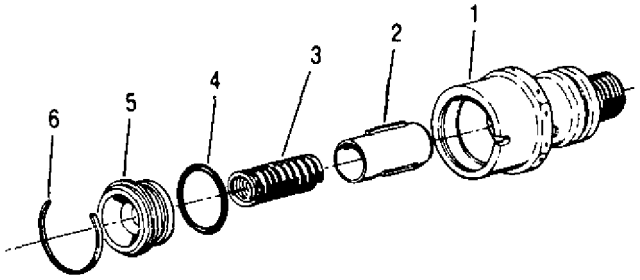

MLD075XG

1. Body
2. Piston
3. Spring
4. Preformed Packing
5. Cap
6. Retaining Ring

Figure 2. Reduction Gear Oil Pressure Relief Valve (Part No. 6842844)

a. Reassemble parts using figure 1 for part No. 6781248 and figure 2 for part No. 6842844 as guides.

NOTE

Outside end face of washer (4, figure 1) or cap (5, figure 2) must be flush with outside end face of snap ring (5, figure 1) or retaining ring (6, figure 2) within 0.005 in.

7. REDUCTION GEAR OIL PRESSURE RELIEF VALVE − TESTING.

Support Equipment Required

Part No./Type Designation	Nomenclature
6799206	Stand Assembly, test, fuel accessories
6799363	Adapter, test, reduction gear pressure relief valve
6799866	Stand Assembly, test, fuel accessories

Materials Required

Specification No./Part No.	Nomenclature
MIL−C−7024	Fluid, calibrating
MIL−PRF−6081	Oil, lubricating

a. Attach 6799363 adapter (figure 4) to relief valve and mount it on 6799206 or 6799866 test stand (figure 5).

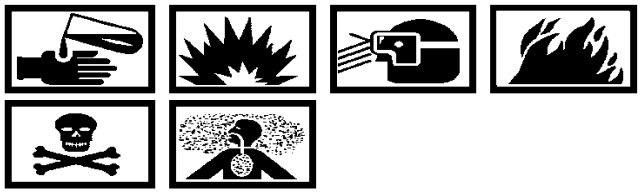

Calibrating Fluid MIL−C−7024, Type II **57**

Lubricating Oil, MIL−PRF−6081, (Grade 1010) **7**

b. Test stand shall supply MIL−C−7024 fluid or MIL−PRF−6081 oil (alternate test fluid) at 180−320 psi and a 1/2−2 pounds per minute flow maintained at a temperature of 70 − 90°F (21 − 32°C).

c. Permissible maximum leakage at 180 psi is 1/2 pound per minute for part No. 6781248 and 1/2 pound per minute at 230 psi for part No. 6842844.

d. Permissible minimum leakage at 245 psi is 2 pounds per minute for part No. 6781248 and 2 pounds per minute at 320 psi for part No. 6842844.

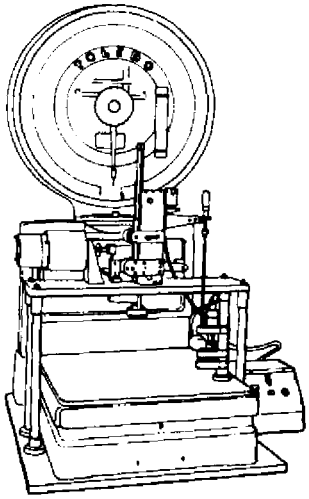

Figure 3. 6799676 Spring Tester

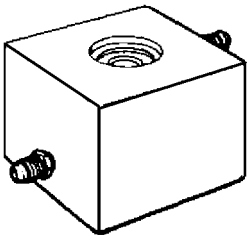

Figure 4. 6799363 Reduction Gear Pressure Relief Valve Test Adapter

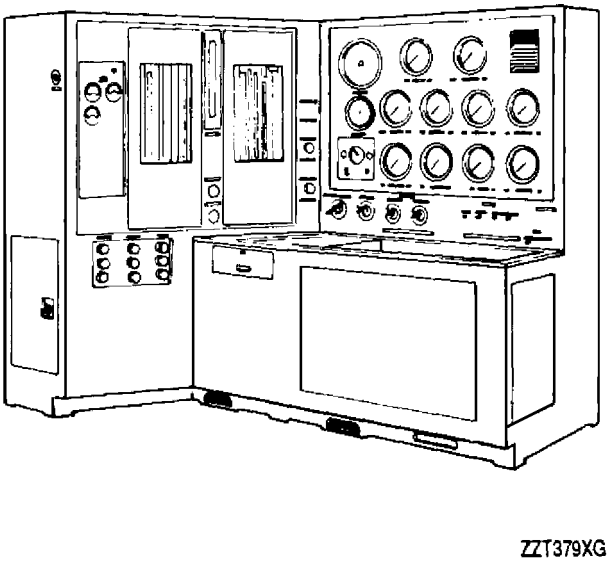

Figure 5. 6799206 or 6799866 Fuel Accessories Test Stand Assembly

DEPOT MAINTENANCE

DISASSEMBLY, CLEANING, INSPECTION, REPAIR, ASSEMBLY AND TESTING

POWER SECTION OIL FILTER

Reference Material

None

Alphabetical Index

Subject **Page No.**

Introduction 2
Power Section Oil Filter 2
Assembly (PPC−115 NINC) 2
Assembly (PPC−115 INC) 3
Cleaning 2
Disassembly (PPC−115 NINC) 2
Inspection and Repair 2
Testing 3

Record of Applicable Technical Directives

Type/No.	Date	Title and ECP No.	Date Inc.	Remarks
PPC−115	——	15 Micron Oil Filter	13 Jun 97	——

1. **INTRODUCTION.**

2. This work package (WP) provides the instructions for disassembly, cleaning, inspection, repair, assembly, and testing of the power section oil filter used on the T56−A−427 turboprop engine.

3. **POWER SECTION OIL FILTER.**

4. POWER SECTION OIL FILTER − DISASSEMBLY.

a. Remove parts using figure 1, PPC−115 NINC, or figure 2, PPC−115 INC, as a guide.

b. Discard all preformed packings.

5. POWER SECTION OIL FILTER − CLEANING.

Materials Required

Specification No./Part No.	Nomenclature
MIL−PRF−680, Type II	Solvent, dry cleaning

CAUTION

Do not use compressed air for cleaning of drying the filter packs or filter element as there is danger of damaging them.

CAUTION

The stem and valve assembly is an integral unit. Do not disassemble (PPC−115 INC).

a. (PPC−115 INC) Using box−end wrench, loosen and unscrew the stem and valve assembly from filter cover.

b. Discard filter packs or pleated elements.

Dry Cleaning Solvent
MIL−PRF−680, Type II **3**

c. Clean all remaining parts of filter with solvent.

d. Clean and thoroughly rinse all passages.

6. POWER SECTION OIL FILTER − INSPECTION AND REPAIR.

Support Equipment Required

Part No./Type Designation	Nomenclature
6799675 or equivalent	Tester, spring, 0−10 pound range, 0.001 pound graduations with one pound vernier controlled scale. (PPC−115 NINC)

a. (PPC−115 NINC) Compress spring (2, figure 1), using 6799675 tester (figure 3) to a length of 0.96 in. Spring pressure at this compressed length shall be 8.5 − 9 pounds.

b. Inspect mounting face of cover (15, figure 1) for nicks, dents, gouges, and scratches.

c. Cover is acceptable providing no portion of cover is broken out and the depth of any nick, dent, gouge or scratch does not exceed 1/2 the depth of preformed packing groove.

d. There must not be any damage to bottom (sealing surface) of preformed packing groove.

e. Lap or polish as required to remove build−up and sharp edges.

f. (PPC−115 INC) No damage is allowed to differential pressure indicator groove.

7. POWER SECTION OIL FILTER − ASSEMBLY. (PPC−115 NINC)

Materials Required

Specification No./Part No.	Nomenclature
MS20995C32	Lockwire
02W929−06 (PPC−115 NINC)	Gasket
20305AF (PPC−115 NINC)	Packing, preformed
20315AF (PPC−115 NINC)	Packing, preformed

a. Install spring (2, figure 1), spring seat (3), retaining ring (5), gasket retainer (6), gasket (7) and valve head on check valve stem (1), and nut (9).

NOTE

Do not use slot in threaded end of check valve stem (1) as a screwdriver slot.

b. Torque nut (9) to 25 − 40 lb. in. to align slots in nut with hole in check valve screw. Install retainer ring (10).

c. Install filter element (13) or starting with a filter pack (11), alternately place filter packs and spacers (10) on perforated tube (4).

CAUTION

Use only spacers fabricated from aluminum. Correct spacers are non−magnetic and 0.040 in. thick (figure 4).

d. Install preformed packing (14, figure 1) and cover (15) on filter assembly.

e. Install bolt (17) and preformed packing (16). Torque bolt to 105 − 135 lbs in. (QA)

f. Check filter stack for security. Looseness indicates a collapsed filter pack.

g. Measure filter stack as shown in figure 4.

h. Lockwire bolt to cover. (QA)

8. POWER SECTION OIL FILTER − ASSEMBLY. (PPC−115 INC)

Materials Required

Specification No./Part No.	Nomenclature
MS20995C32	Lockwire
MIL−PRF−23699	Oil, lubricating

Lubricating Oil, MIL−PRF−23699 2

a. Apply lubricating oil, MIL−PRF−23699, to all preformed packings.

b. Install new oil filter element (5, figure 2) and two preformed packings (4) on stem and valve assembly (6).

c. Install new packing (7) on stem and valve assembly (6).

d. Install new packing (8) on filter cover (3).

e. Install packing (2) on drain plug (1) and install drain plug (1) in filter cover (3). Torque to 40 − 50 lb. in. and lockwire.

f. If red pop−out (DELTA−P) indicator was extended, reset by pushing red pop−out indicator in until flush.

9. POWER SECTION OIL FILTER − TESTING.

Materials Required

Specification No./Part No.	Nomenclature
MIL−C−7024	Fluid, calibrating
MIL−PRF−6081, Grade 1005	Oil, lubricating
MIL−PRF−23699	Oil, lubricating

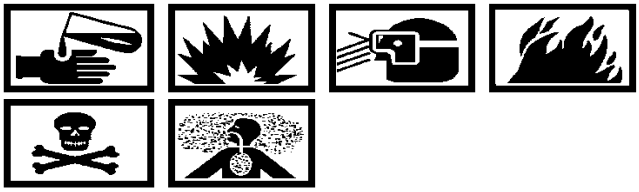

Calibrating Fluid MIL−C−7024, Type II 57

Lubricating Oil, MIL−PRF−6081, (Grade 1010) 7

Lubricating Oil, MIL−PRF−23699 2

a. Use MIL−PRF−23699 oil at 180°F (82°C), MIL−C−7024 fluid at 80°F (26.7°C), or MIL−PRF−6081 Grade 1005 oil at 100°F (37.8°C).

b. Check valve opening pressure. Valve shall open at 6 − 10 psi pressure differential.

c. Apply five psi pressure at inlet. Check valve shall not exceed leakage of three cc per hour in normal direction of flow.

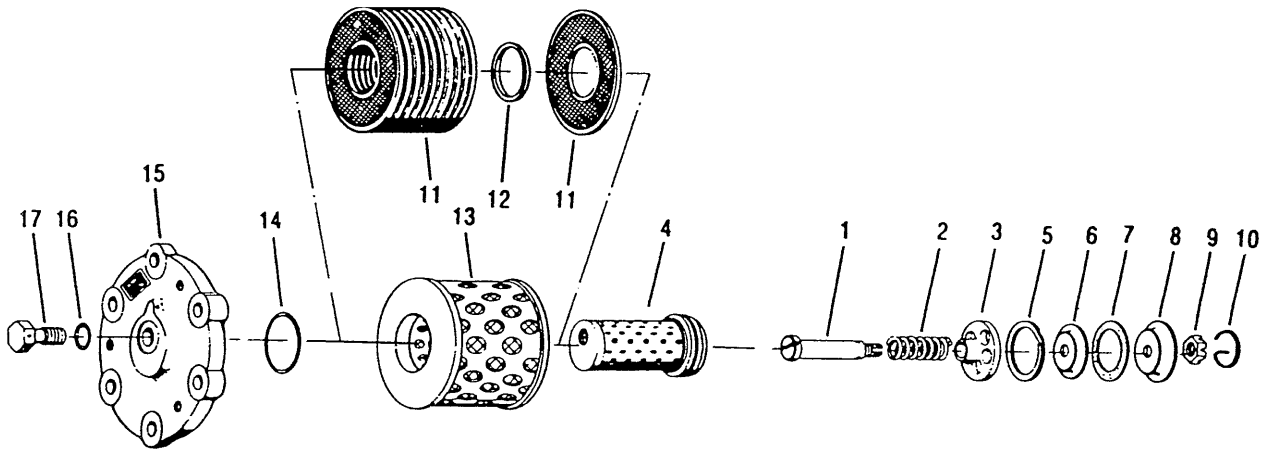

1.	Check Valve Stem	6.	Gasket Retainer	10.	Retainer Ring
2.	Spring	7.	Gasket	11.	Filter Pack (11)
3.	Spring Seat	8.	Check Valve Adapter	12.	Spacer (10)
4.	Perforated Tube	9.	Nut	13.	Filter Element
5.	Retainer Ring				

14.	Preformed Packing
15.	Cover
16.	Preformed Packing
17.	Bolt

Figure 1. Power Section Oil Filter (PPC−115 NINC)

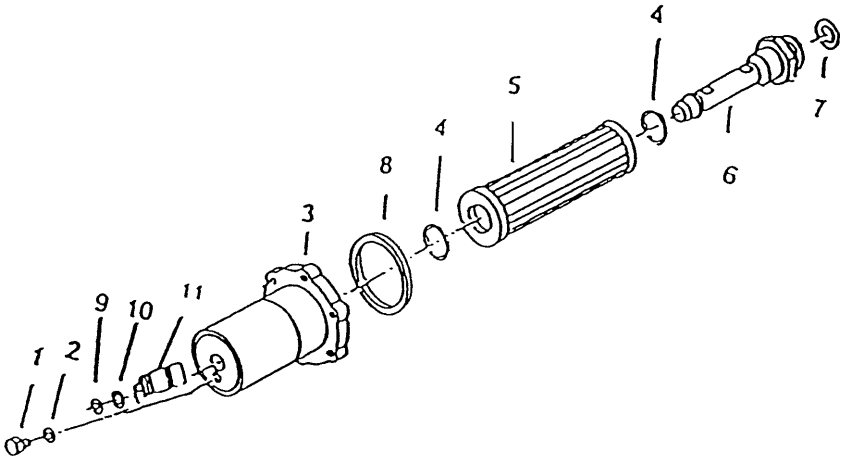

1. Plug, Drain
2. Preformed Packing
3. Cover
4. Preformed Packing
5. Filter Element
6. Stem and Valve Assembly
7. Preformed Packing
8. Preformed Packing
9. Snap Ring
10. Washer
11. Differential Pressure Indicator

Figure 2. Power Section Oil Filter (PPC−115 INC)

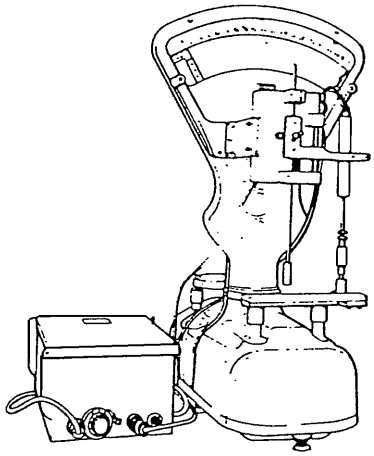

Figure 3. 6799675 Spring Tester (PPC−115 NINC)

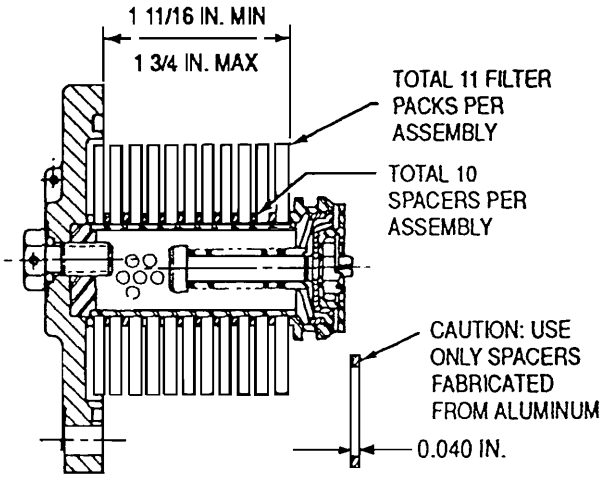

Figure 4. Power Section Oil Filter Assembly (PPC−115 NINC)

DEPOT MAINTENANCE

DISASSEMBLY, INSPECTION, REPAIR, TESTING, AND ASSEMBLY

BURNER DRAIN VALVE

Reference Material

None

Alphabetical Index

Subject **Page No.**

Burner Drain Valve 2
Assembly 2
Disassembly 2
Inspection and Repair 2
Testing 2
Introduction 2

Record of Applicable Technical Directives

None

1. **INTRODUCTION.**

2. This work package (WP) provides the instructions for disassembly, inspection, repair, assembly, and testing of the burner drain valve used on the T56−A−427 turboprop engine.

3. **BURNER DRAIN VALVE.**

4. BURNER DRAIN VALVE − DISASSEMBLY.

a. Remove parts using figure 1 as a guide.

b. Discard gasket.

5. BURNER DRAIN VALVE − INSPECTION AND REPAIR.

a. Inspect condition of valve seat, (2, figure 1) and adapter seat (5).

b. If scratched, lap to a 16 RMS finish or better.

c. Replace parts as necessary when test requirements cannot be met.

6. BURNER DRAIN VALVE − ASSEMBLY.

Materials Required

Specification No./Part No.	Nomenclature
MIL−A−907	Compound, thread, anti−seize
6814039	Gasket

a. Reassemble valve using figure 1 as a guide.

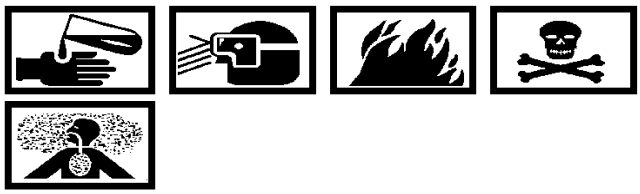

Compound, thread, anti−seize MIL−A−907 **59**

b. Lubricate threads with MIL−A−907 before assembly.

c. Torque adapter (5) to 300 − 350 lb in. (QA)

7. BURNER DRAIN VALVE−TESTING.

Support Equipment Required

Part No./Type Designation	Nomenclature
6799192	Adapter, test, fuel
6799866 or 6799013	Stand Assembly, test, fuel accessories

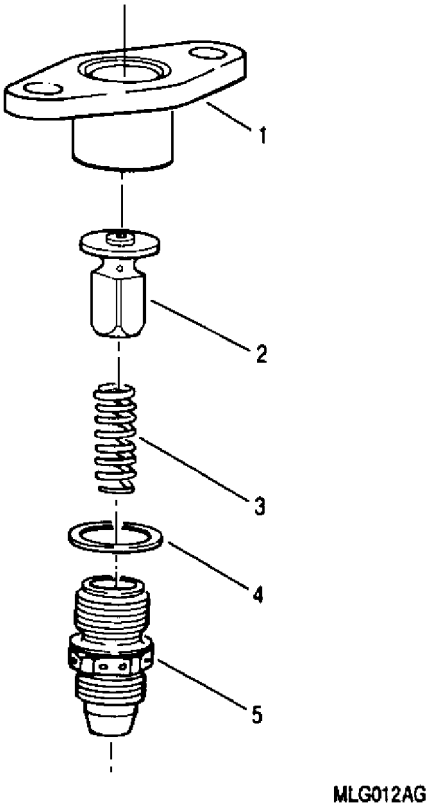

1. Body
2. Valve Seat
3. Spring
4. Gasket
5. Adapter Seat

Figure 1. Burner Drain Valve

Materials Required

Specification No./Part No.	Nomenclature
MIL−C−7024	Fluid, calibrating

NOTE

All specified operating limits refer to new or overhauled valves. In−service limits are also listed where applicable.

Body flange of valve to be in up position during testing.

a. Attach 6799192 (figure 2) adapter to burner drain valve and mount assembly on 6799866 or 6799013 test stand (figure 3).

b. Open and close:

(1) Apply increasing air pressure to inlet of burner drain valve. Valve shall close between 5 and 10 psig (In−service limit 4 to 11 psig).

(2) Reduce air pressure, valve shall open between 1 and 3 psig (In−service limit 0.5 to 4 psig).

(3) Reduce air pressure to zero.

(4) Repeat five (5) times.

c. Leakage:

(1) Apply 70 psig air pressure to inlet of valve.

(2) Compressed air leakage at outlet of valve shall not exceed 800 cc/min (In−service limit 3000 cc/min).

(3) No external valve body leakage permitted.

(4) Reduce air pressure to zero.

d. Flow:

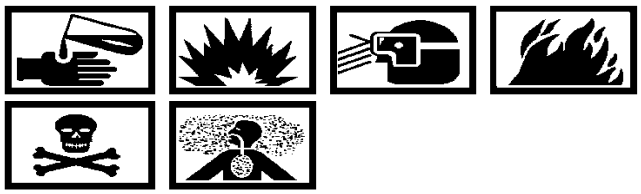

Calibrating Fluid MIL−C−7024, Type II **57**

(1) Apply MIL−C−7024, Type II test fluid to inlet of valve at 3 psig.

(2) Minimum fluid flow rate at outlet of valve must be 800 cc/min.

(3) Reduce fluid pressure/flow to zero.

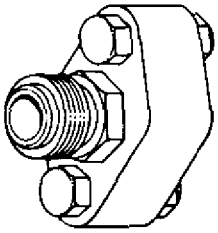

ZZT425XJ

Figure 2. 6799192 Fuel Test Adapter

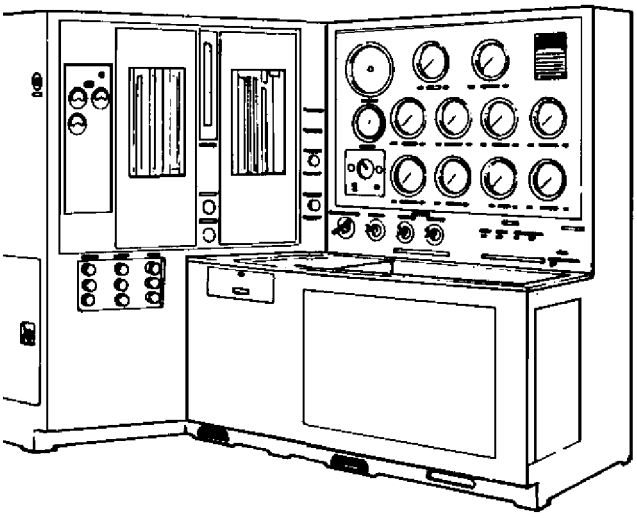

ZZT379XG

Figure 3. 6799866 Fuel Accessories Test Stand Assembly

DEPOT MAINTENANCE

DISASSEMBLY, INSPECTION, REPAIR, ASSEMBLY, AND TESTING

COMPRESSOR BLEED AIR VALVES

Reference Material

None

Alphabetical Index

Subject **Page No.**

Compressor Bleed Air Valves 2
Assembly 3
Cleaning 2
Disassembly 2
Inspection and Repair 2
Testing 4
Introduction 2

Record of Applicable Technical Directives

None

1. **INTRODUCTION.**

2. This work package (WP) provides the instructions for disassembly, cleaning, inspection, repair, assembly, and testing of the compressor bleed air valves used on the T56−A−427 turboprop engine.

3. **COMPRESSOR BLEED AIR VALVES.**

4. COMPRESSOR BLEED AIR VALVES − DISASSEMBLY.

a. Remove parts using figure 1 as a guide.

5. COMPRESSOR BLEED AIR VALVES − CLEANING.

Materials Required

Specification No./Part No.	Nomenclature
MIL−PRF−680, Type II	Solvent, Dry Cleaning

Dry Cleaning Solvent
MIL−PRF−680, Type II **3**

a. Clean Teflon piston rings with MIL−PRF−680, Type II dry cleaning solvent.

6. COMPRESSOR BLEED AIR VALVES − INSPECTION AND REPAIR.

Materials Required

Specification No./Part No.	Nomenclature
MIL−C−5541	Alodine
NS165	Anti−seize Compound (Never Seez)

a. Replace Teflon piston rings (6, figure 1) and expanders (5) if test requirements are not met.

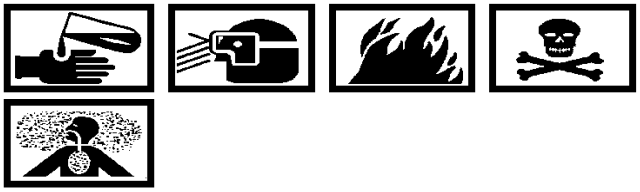

Chemical Conversion Coating
MIL−C−5541 **30**

b. Nicks, dents, scratches, etc., that do not exceed 0.020 in. in depth may be smoothed out and treated with MIL−C−5541 alodine.

c. Repair any damage to seat retainer (3) which prevents 100% surface contact with compressor case manifold by lapping entire surface on a flat plate. Treat lapped surface with MIL−C−5541 alodine.

d. Pitting and wear not exceeding 0.030 in. in depth and not in area of bolt holes is allowed in outside diameter and mating flange of housing (9).

e. Smooth out one area of shallow wear 0.002 in. deep and less than one in. in circumferential length on inside diameter of housing. Treat repaired area with MIL−C−5541 alodine.

f. Inside diameter of housing is 2.502 in. maximum.

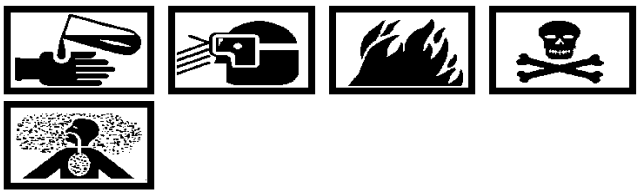

Anti−seize Compound (Never Seez) NS165 **31**

g. Spray mating flange and outside diameter of housing with Anti−seize Compound (Never Seez) NS165.

7. COMPRESSOR BLEED AIR VALVES − ASSEMBLY.

Materials Required

Specification No./Part No.	Nomenclature
NS165	Anti−seize Compound (Never Seez)

a. Reassemble valve using figure 1 as a guide and the following:

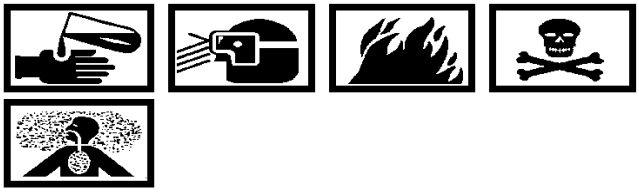

Anti−seize Compound (Never Seez) NS165 31

b. Coat ID of housing (9) with a thin film of Anti−seize Compound (Never Seez) NS165.

CAUTION

Do not stretch expanders during installation.

c. Place expanders (5) in grooves of piston and lock ends together.

d. Assemble piston rings (6) in each groove with ring gaps 180−160° apart, also gaps of rings located at 70−100° from cut ends of expander.

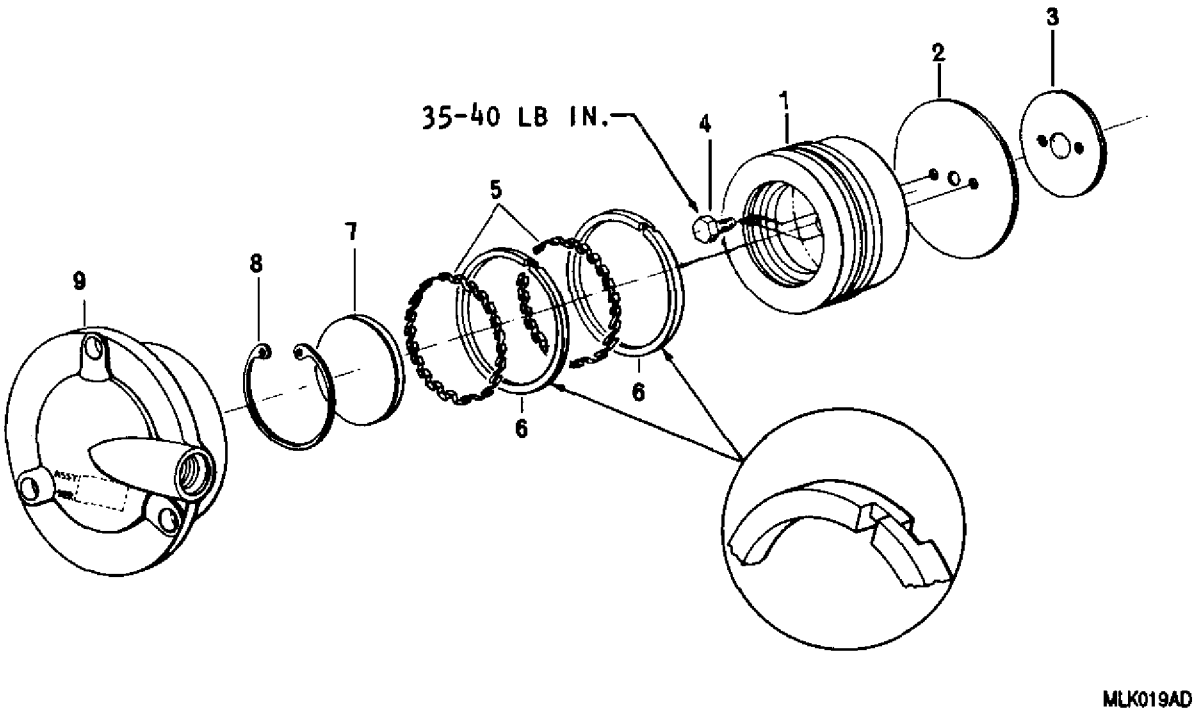

1. Piston
2. Gasket
3. Seat Retainer
4. Bolt
5. Expanders
6. Teflon Piston Ring
7. Disc
8. Retaining Ring
9. Housing

Figure 1. Compressor Bleed Air Valve

8. COMPRESSOR BLEED AIR VALVES − TESTING.

Support Equipment Required

Part No./Type Designation	Nomenclature
6799198	Adapter, valve, air bleed

a. Compressor bleed air valve assembly shall be fastened to 6799198 adapter (figure 2) and a test stand with 1/4−28 UNF bolts through three mounting holes in valve. Torque bolts to 80 − 90 lb in. (QA)

NOTE

Surface of test fixture against piston seats shall be flat within 0.001 in. and have a 16 RMS finish. Minimum height of flange mounting surface along bolt circle to piston seating surface shall be 1.791 − 1.789 in. Flange mounting surface shall be tilted relative to piston seating surface to have a maximum height difference along bolt circle of 0.029 − 0.031 in. Opening through piston seating surface shall be 2.000 − 1.998 in.

Valve shall be fully open on fourth cycle when pressure is reduced to 15.0 in. of water less than atmospheric pressure.

b. With valve open, apply 95 − 105 psi air to actuating pressure port to close valve. Slowly pull a vacuum to open valve. Repeat above procedure far a total of four cycles. A cycle shall consist of one complete opening and closing of the valve.

c. Apply 160 − 170 psi air pressure to actuating pressure port. Leakage past valve piston rings shall not exceed 0.07 pound per minute.

d. Apply 163 − 167 psi air pressure to actuating pressure port and 123 − 127 psi air pressure to port in test fixture which supplies air through valve seat. Leakage through valve seat shall not exceed 0.07 pound per minute.

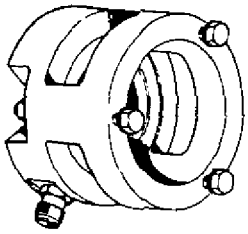

ZZT413X

Figure 2. 6799198 Bleed Air Valve Adapter

DEPOT MAINTENANCE

CLEANING, DISASSEMBLY, INSPECTION, ASSEMBLY, REPAIR, AND TESTING

SINGLE ELEMENT HIGH PRESSURE FUEL FILTER

Reference Material

Paralleling Valve, Overhaul Instructions with Illustrated Parts Breakdown . . . . . NAVAIR 03−110FT−1

Alphabetical Index

Subject **Page No.**

Introduction 2
Single Element High Pressure Fuel Filter 2
Assembly 4
Cleaning 2
Disassembly 2
Inspection 2
Repair 2
Testing 4

Record of Applicable Technical Directives

None

1. **INTRODUCTION.**

2. This work package (WP) contains the procedures for cleaning, disassembly, inspection, assembly, repair, and testing of the single element high pressure fuel filter used on the T56−A−427 turboprop engine.

3. **SINGLE ELEMENT HIGH PRESSURE FUEL FILTER.**

4. SINGLE ELEMENT HIGH PRESSURE FUEL FILTER − DISASSEMBLY.

Support Equipment Required

Part No./Type Designation	Nomenclature
T27341	Puller, solenoid valve seat

a. Remove parts using figure 1 as a guide.

b. Using puller, T27341 or suitable equivalent, remove check valve seat assembly (5) from base (20).

c. Discard seat (2) and all preformed packings.

5. SINGLE ELEMENT HIGH PRESSURE FUEL FILTER − CLEANING.

Materials Required

Specification No./Part No.	Nomenclature
MIL−PRF−680, Type II	Solvent, Dry Cleaning

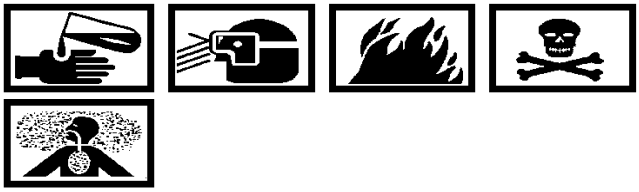

Dry Cleaning Solvent MIL−PRF−680, Type II **3**

a. Clean all parts of filter with MIL−PRF−680, Type II dry cleaning solvent.

b. Clean and thoroughly rinse all passages in base (20, figure 1).

c. Clean filter packs (22) with a soft−bristled brush and rinse frequently to wash away dirt particles dislodged by brushing.

d. Ultrasonic cleaning of filter packs maybe used if facilities are available. Filter packs must be disassembled for this type of cleaning.

CAUTION

To avoid damaging filter packs, do not clean or dry them with compressed air.

Compressed Air **56**

e. Place filter packs on a clean surface to dry. Other parts may be dried with lint−free cloth or compressed air.

6. SINGLE ELEMENT HIGH PRESSURE FUEL FILTER − INSPECTION.

a. Each check valve spring (6, figure 1) shall have a free state length of 0.875 − 1.125 in.

7. SINGLE ELEMENT HIGH PRESSURE FUEL FILTER − REPAIR.

Support Equipment Required

Part No./Type Designation	Nomenclature
——	Wrench, torque (0−100 lb in.)

Materials Required

Specification No./Part No.	Nomenclature
MS20995C32	Lockwire

a. Individual filter packs (22, figure 1) in disc and stud assembly (27) may be replaced if a filter pack is damaged.

b. Torque nut (25) to 40 − 60 lb in. and lockwire. (QA)

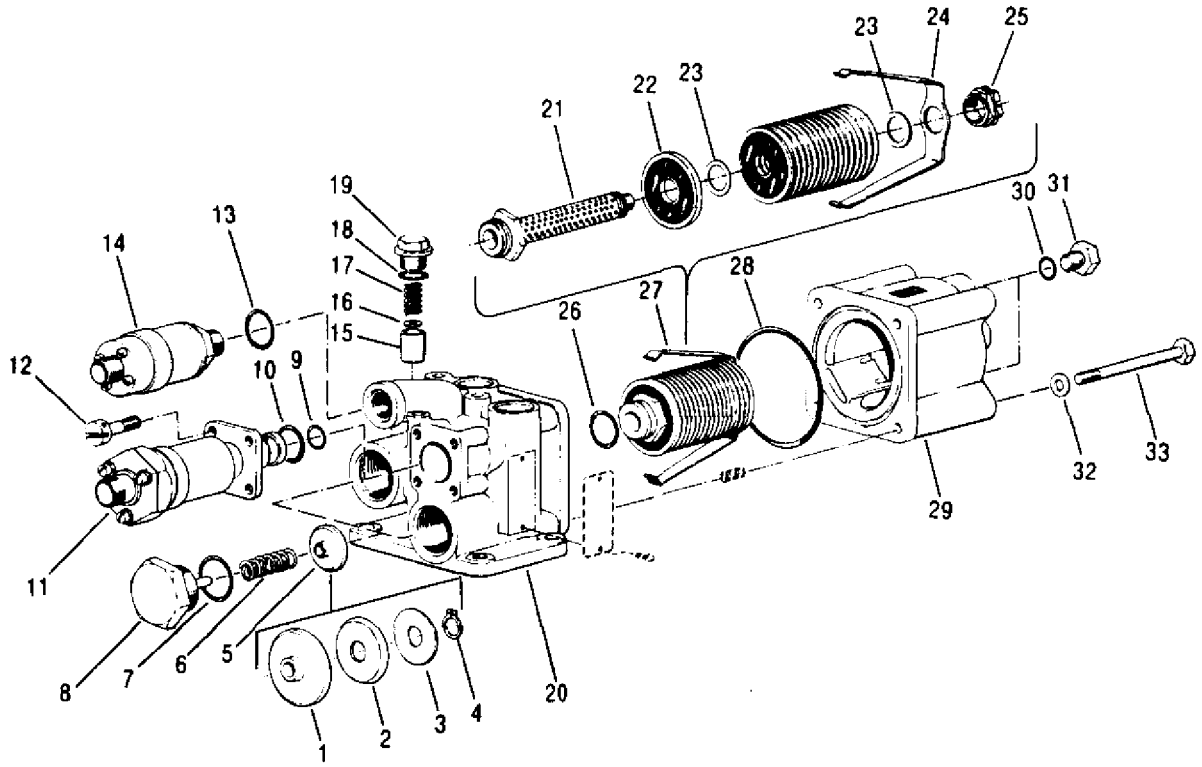

1. Retainer	12. Capscrew	23.	Spacer	OBS024XD
2. Seat 6812647	13. Preformed Packing MS9020−06	24.	Retainer	
3. Washer	14. Pressure Switch	25.	Nut	
4. Retaining Ring	15. Bypass Valve	26.	Preformed Packing MS9021−115	
5. Check Valve Seat Assembly	16. Washer	27.	Disc and Stud Assembly	
6. Spring	17. Spring	28.	Preformed Packing MS9021−331	
7. Preformed Packing MS9020−12	18. Preformed Packing MS9021 −111	29.	Cover	
8. Guide	19. Plug	30.	Preformed Packing MS9020−04	
9. Preformed Packing MS9021−112	20. Base	31.	Plug	
10. Preformed Packing MS9021−116	21. Perforated Tube	32.	Washer	
11. Paralleling Valve	22. Filter Pack	33.	Bolt	

Figure 1. High Pressure Fuel Filter Assembly

8. SINGLE ELEMENT HIGH PRESSURE FUEL FILTER − ASSEMBLY.

Support Equipment Required

Part No./Type Designation	Nomenclature
——	Wrench, torque (0−100 lb in.)
——	Wrench, torque (100−200 lb in.)
——	Wrench, torque (250−600 lb in.)

Materials Required

Specification No./Part No.	Nomenclature
MS20995C32	Lockwire
MS9020−04	Packing, preformed (2)
MS9020−06	Packing, preformed
MS9020−12	Packing, preformed (2)
MS9021−111	Packing, preformed
MS9021−112	Packing, preformed
MS9021−115	Packing, preformed
MS9021−116	Packing, preformed
MS9021−231	Packing, preformed
6812647	Seat (2)

a. Assemble fuel filter assembly using figure 1 as a guide and the following:

(1) Install bypass valve (15), washer (16), spring (17), preformed packing (18) and plug (19) in base (20). Torque plug to 120 − 160 lb in. and lockwire. (QA)

(2) Assemble check valve seat assembly (5), items (1 through 4).

(3) Install check valve seat assembly, spring (6), preformed packing (7), and guide (8) in base (20). Torque guide to 300 − 500 lb in. and lockwire. (QA)

(4) Install preformed packing (10) and preformed packing (9) in base.

(5) Align fuel hole in paralleling valve (11) with fuel hole inlet in base. Install capscrews (12). Torque capscrews alternately at 5 lb in. increment until torque of 15 lb in. is reached for each capscrew and lockwire. (QA)

(6) Install preformed packing (13) and pressure switch (14) in base. Torque pressure switch to 20 − 40 lb in. and lockwire. (QA)

(7) Assemble disc and stud assembly (27), items (21 through 25). Torque nuts to 40 − 60 lb in. and lockwire. (QA)

(8) Install preformed packing (26) in base.

(9) Install preformed packing (28) and disc and stud assembly in cover (29).

(10) Install washer (32) and bolt (33). Torque bolt to 50 − 58 lb in. and lockwire. (QA)

(11) Install preformed packing (30) and plug (31). Torque plug to 40 − 65 lb in. and lockwire. (QA)

9. SINGLE ELEMENT HIGH PRESSURE FUEL FILTER − TESTING.

Support Equipment Required

Part No./Type Designation	Nomenclature
6799163	Adapter, test, fuel filter
6799206	Stand Assembly−test, fuel accessories
6799866	Stand Assembly−test, fuel accessories

Materials Required

Specification No./Part No.	Nomenclature
MIL−C−7024, Type II	Fluid, calibrating
MS29513−213	Packing, preformed (4)

NOTE

Pressure switch (14, figure 1) and paralleling valve (11) shall be installed in filter assembly for testing. Failure of either of these units during testing shall not constitute a filter assembly failure since these units are subject to their own test requirements. Defective units shall be replaced so that filter assembly with units installed can pass testing outlined below.

Paralleling valve test procedure from NAVAIR 03−110FT−1 shall be conducted during filter assembly tests.

a. Prepare 6799163 adapter for testing as follows: (figure 3)

(1) Connect secondary pump pressure tap, primary pump pressure tap, and filter out pressure tap connections (1/4 in. NPT, located on left end) to individual pressure gages of at least 1000 psi capacity.

(2) Connect the 48 in. long hose to 3/4 in. NPT connection designated to filter outlet port on left end of fuel filter adapter. During fuel filter assembly testing, other end of hose shall be attached to fuel filter assembly outlet port.

(3) Connect secondary pump outlet and primary pump outlet connections (both 3/4 in. NPT, located on right end) to 6799206 or 6799866 test stand pressure supply (figure 4).

(4) Connect filter outlet connection (3/4 in. male NPT on right end) to test stand flowmeter.

(5) Connect adapter to a 24 volt DC supply.

(6) Close all valves on adapter.

b. Install fuel filter assembly to be tested on adapter as follows:

(1) Place fuel assembly filter on adapter block, ensuring that preformed packings are properly sealed in recesses in adapter block.

(2) Secure fuel filter assembly in place with six 1/4−28 nuts. Torque nuts evenly to 100 lbs in.

(3) Attach free end of 48 in. hose (connected at other end to filter outlet port on adapter) to fuel filter assembly Port F (outlet port) (figure 2).

(4) Connect two power cables to paralleling valve (11, figure 1) and pressure switch (14).

(5) Plug or otherwise block uncontrolled ports on fuel filter assembly as required by test procedure.

(6) When fuel filter assembly Ports G and H (figure 2) must be blocked (for testing filter bypass valve (15, figure 1), apply adapter plate over exposed ports after cover (29) and disc and stud assembly (27) have been removed from filter assembly.

c. Valves on front of adapter are provided for the following functions:

(1) Secondary pump inlet valve. Provides a means of blocking fuel filter assembly Port A (secondary pump inlet port) (figure 2). This valve must be open to check leakage through fuel filter assembly primary check valve.

(2) Primary pump inlet valve. Provides a means of blocking fuel filter assembly Port C (primary pump inlet port) during high−pressure leakage testing. This valve must be open when checking leakage through fuel filter assembly paralleling valve.

(3) Primary pump outlet valve. Provides a means of blocking fuel filter assembly Port D (primary pump outlet port) during high−pressure testing. This valve is also used to regulate flow through the fuel filter assembly during pressure drop test and to control test fluid flow to fuel filter assembly Port D during fuel filter assembly bypass valve testing.

(4) Secondary pump outlet valve. Provides a means of blocking fuel filter assembly Port B (secondary pump outlet port) during high pressure testing. This valve is also used to control test fluid flow to fuel filter assembly Port B when testing closure of fuel filter assembly paralleling valve and when testing operation of fuel filter assembly pressure switch.

(5) Fuel filter assembly outlet valve. Provides a means of blocking fuel filter assembly Port F (filter outlet port). This valve must be open when testing pressure drops through fuel filter assembly.

d. Two electrical switches and pilot light are mounted on top of adapter. One switch provides control for paralleling valve in fuel filter assembly under test. The other switch is connected in series with pilot light and must be in ON position for pilot light to glow when pressure switch in fuel filter assembly closes.

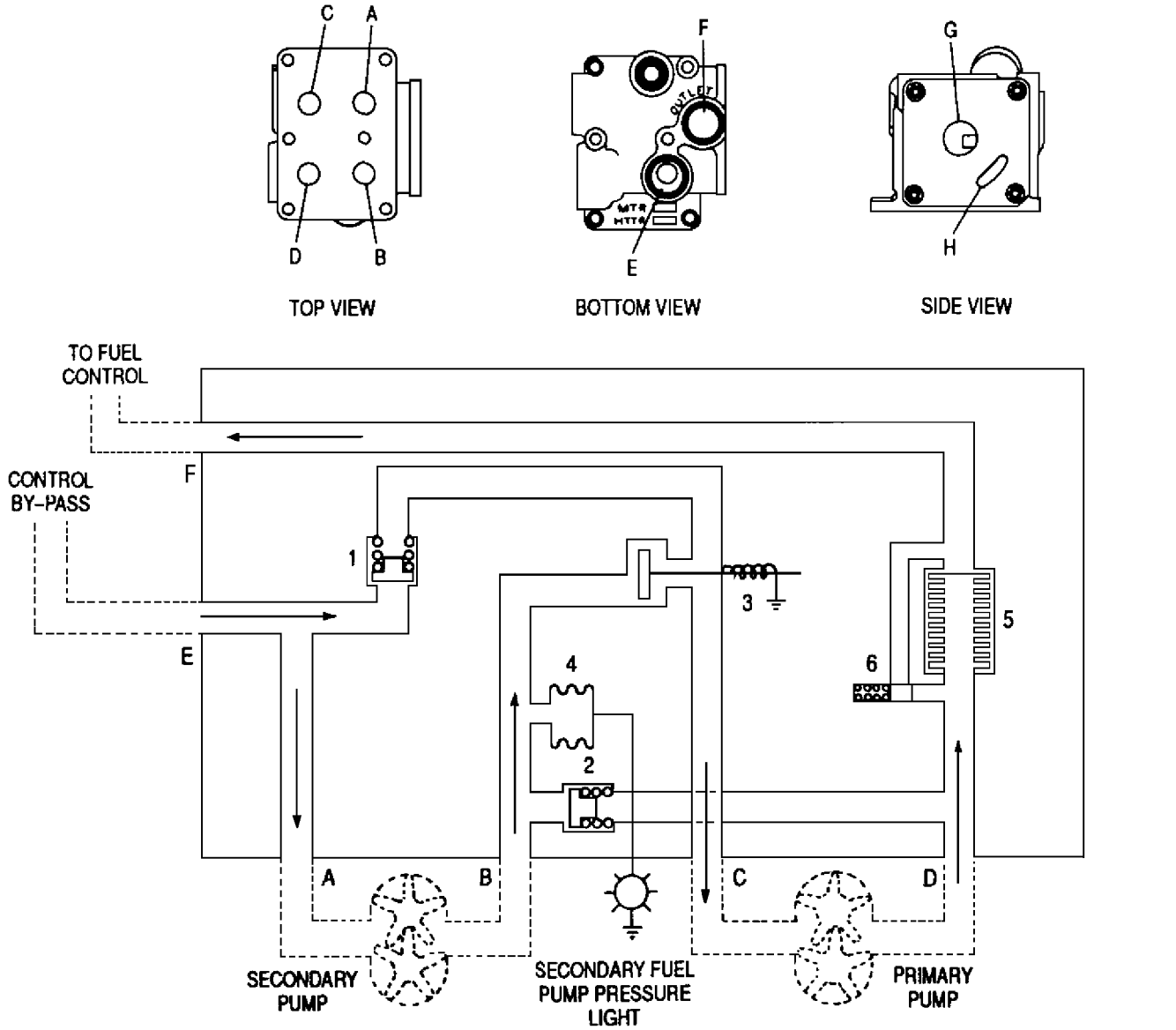

A. Secondary Pump Inlet Port	E. Fuel Control Bypass Port	1. Check Valve	4. Pressure Switch
B. Secondary Pump Outlet Port	F. Filter Assy Outlet Port	2. Check Valve	5. Filter
C. Primary Pump Inlet Port	G. Filter Outlet Port	3. Paralleling Valve	6. Filter Bypass Valve
D. Primary Pump Outlet Port	H. Filter Inlet Port		

Figure 2. Fuel Filter Assembly Schematic and Port Diagram

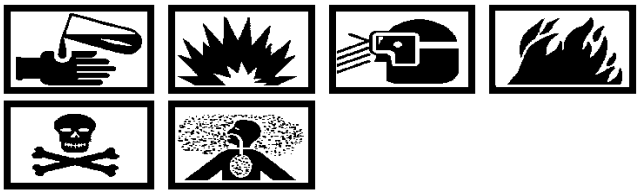

e. Use MIL−C−7024, Type II calibrating fluid at a temperature of 70 − 90°F (21 − 32°C). Mount fuel filter assembly on a test stand and supply a source of variable fluid pressures from 0 − 1000 psi, and 28 volts DC power. Bleed air from unit before applying fluid pressure.

Calibrating Fluid MIL−C−7024, Type II **57**

f. Plug Ports A, D, E, and F. Apply 300 psi to Port B with paralleling valve energized to close. Leakage from Port C shall not exceed 60 cc per minute. Apply 600 psi to Port B. Leakage from Port C shall not exceed 150 cc per minute. De−energize paralleling valve to open and apply 4050 − 4070 pounds per hour flow into Port B and out Port C. Pressure drop shall not exceed 40 psi.

g. During above test, when gradually increasing pressure, a warning light shall burn when pressure reaches 140 − 160 psi. When gradually decreasing pressure, warning light should go out before pressure decreases to 90 psi.

h. Plug Ports A, B, C, and E. Apply 4050 − 4070 pounds per hour flow into Port D and out Port F. Pressure drop shall not exceed 24 psi.

NOTE

When taking pressure drop readings, sense filter out pressure at filter cover bleeder plug opening.

i. De−energize paralleling valve to open and plug Ports C, D, E, and F. Apply 100 psi and 650 psi pressure to Port B. Permissible maximum leakage from Port A at either pressure is two cc per minute.

j. De−energize paralleling valve to open and plug Ports A, C, E, and F. Apply 100 psi and 650 psi to Port D. Permissible maximum leakage from Port B at either pressure is two cc per minute.

k. Plug Ports A, B, C, and D. Apply 900 psi to Ports E and F. There shall be no external leakage.

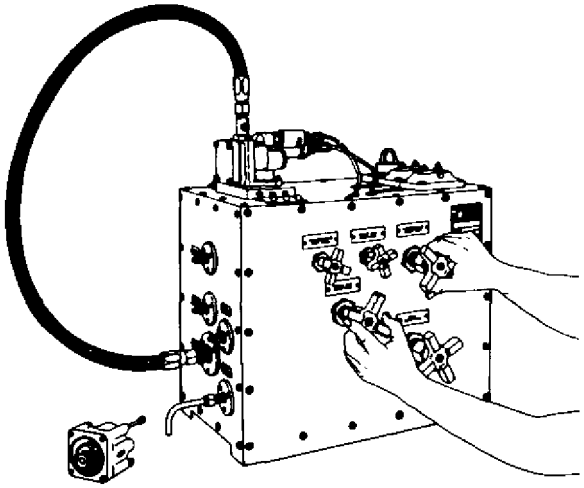

MLH049XH

Figure 3. 6799163 Fuel Filter Test Adapter with Fuel Filter Assembly Installed

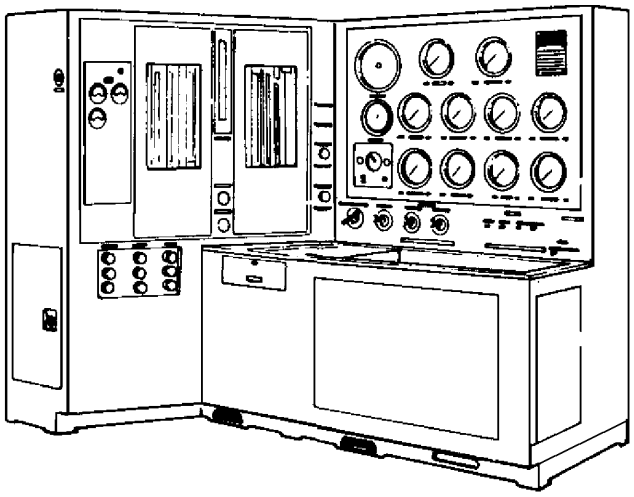

ZZT379XG

Figure 4. 6799866 Fuel Accessories Test Stand Assembly

DEPOT MAINTENANCE

DISASSEMBLY, CLEANING, INSPECTION, ASSEMBLY, AND TESTING

ANTI−ICING AIR VALVE

Reference Material

None

Alphabetical Index

Subject **Page No.**

Anti−Icing Air Valve 2
Assembly 2
Cleaning 2
Disassembly 2
Inspection 2
Testing 2
Introduction 2

Record of Applicable Technical Directives

None

1. **INTRODUCTION.**

2. This work package (WP) provides the instructions for disassembly, cleaning, inspection, assembly, and testing of the anti−icing air valve used on the T56−A−427 turboprop engine.

3. **ANTI−ICING AIR VALVE.**

4. ANTI−ICING AIR VALVE − DISASSEMBLY.

a. Remove parts, using figure 1 as a guide.

5. ANTI−ICING AIR VALVE − CLEANING.

Materials Required

Specification No./Part No.	Nomenclature
MIL−PRF−680, Type II	Solvent, Dry Cleaning

Dry Cleaning Solvent
MIL−PRF−680, Type II **3**

a. Clean air valve parts with MIL−PRF−680, type II dry cleaning solvent.

6. ANTI−ICING AIR VALVE − INSPECTION.

Support Equipment Required

Part No./Type Designation	Nomenclature
6799675	Tester, spring, 0 − 10 pound range, 0.001 pound graduations with one pound vernier controlled scale

a. Compress spring to a length of 0.688 in., using 6799675 tester (figure 2).

b. Spring pressure at this compressed length shall be 1.8 − 2.2 pounds.

c. Compress spring to a length of 0.313 in.

d. Spring pressure at this compressed length shall be 3.02 − 3.42 pounds.

7. ANTI−ICING AIR VALVE − ASSEMBLY.

Support Equipment Required

Part No./Type Designation	Nomenclature
——	Wrench, torque (0−50 lb ft.)

Materials Required

Specification No./Part No.	Nomenclature
23008227	Gasket

a. Reassemble valve, using figure 1 as a guide.

b. Torque nuts (1) to 40 lb in., loosen, and retorque to 35 − 40 lb in. (QA)

8. ANTI−ICING AIR VALVE − TESTING.

Support Equipment Required

Part No./Type Designation	Nomenclature
6799199 or 23034329	Adapter, valve, anti−icing air
6799152	Stand assembly, test, air valve

a. Install anti−icing air valve with 23034329 adapter (figure 3) on 6799152 test stand.

b. Test fixture outlet port shall be restricted by a 0.248 − 0.252 in. diameter orifice.

NOTE

An air pressure gauge shall be connected to the inlet line at the point where the inlet line connects to the test fixture.

c. Supply a source of clean variable air pressure from 18−200 psig to the valve inlet through a line with a minimum ID of 0.400 in.

d. Connect valve vent to a shutoff valve through a 0.068 − 0.078 in. diameter, 0.030 − 0.032 in. long orifice.

NOTE

A cycle shall consist of a complete opening and closing of valve.

e. Check valve operation by completing three cycles with 16 − 20 psig air supplied to inlet and three cycles with 190 − 200 psig air supplied to inlet.

f. Anti−icing valve should close when shutoff valve is closed.

g. Check external air leakage by applying 190 − 200 psig to inlet port through a line with a min ID of 0.400 in.

h. There shall be no external leakage with the vent and outlet ports sealed when the valve is in either the open or closed position.

i. Check internal leakage by applying 190 − 200 psig clean air to inlet port.

j. Leakage from outlet port shall not exceed one cfm with valve in closed position.

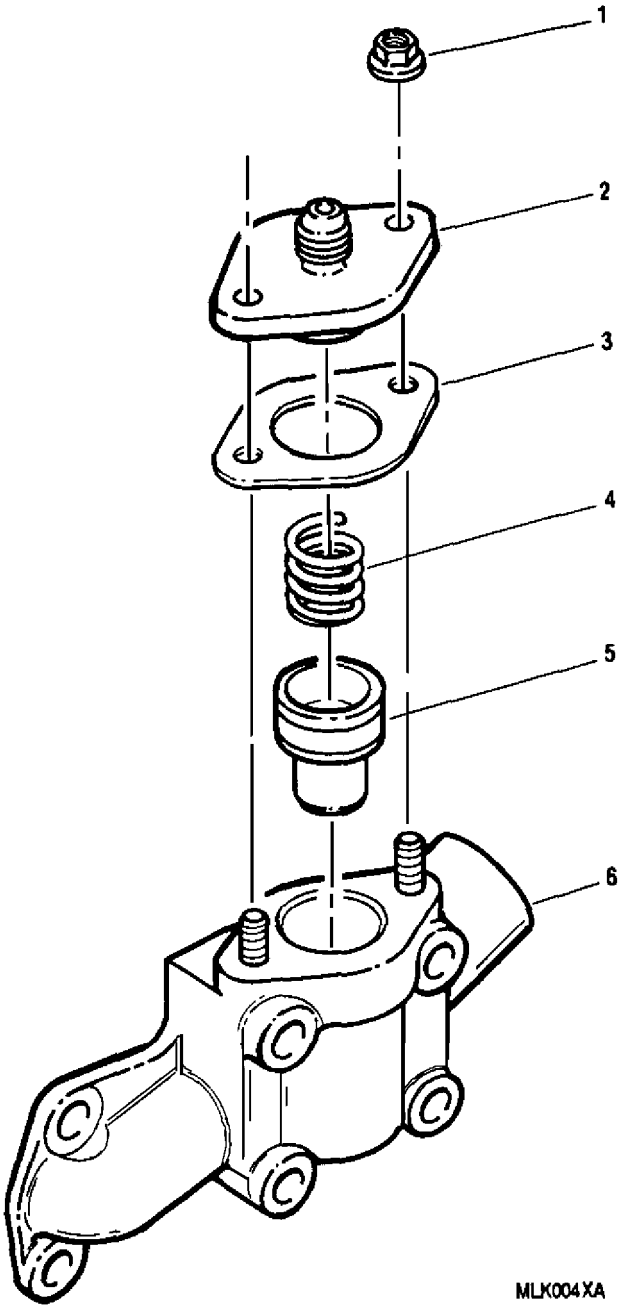

1. Nut
2. End Cover
3. Gasket
4. Spring
5. Piston
6. Body Assembly

Figure 1. Anti−Icing Air Valve

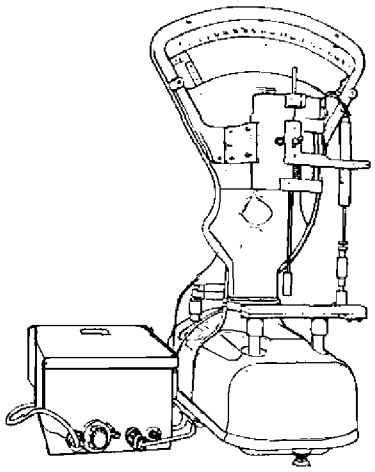

ZZT291XH

Figure 2. 6799675 Spring Tester (0−10 Pound Range)

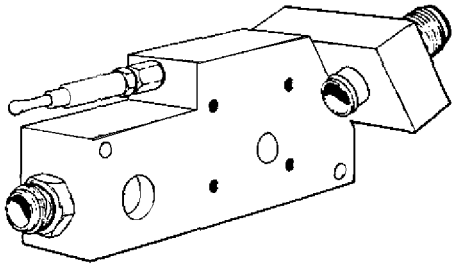

ZZT292XJ

Figure 3. 23034329 Anti−Icing Air Valve Adapter

DEPOT MAINTENANCE

DISASSEMBLY, CLEANING, INSPECTION, ASSEMBLY, AND TESTING

CHECK VALVE

Reference Material

None

Alphabetical Index

Subject **Page No.**

Check Valve 2
Assembly 2
Cleaning 2
Disassembly 2
Inspection 2
Testing 2
Introduction 2

Record of Applicable Technical Directives

None

1. **INTRODUCTION.**

2. This work package (WP) provides the instructions for disassembly, cleaning, inspection, assembly, and testing of the check valves used in the T56−A−427 turboprop engine.

3. **CHECK VALVES.**

4. CHECK VALVES − DISASSEMBLY.

a. Remove parts using figure 1 as a guide.

b. Discard preformed packing.

5. CHECK VALVES − CLEANING.

Materials Required

Specification No./Part No.	Nomenclature
MIL−PRF−680, Type II	Solvent, Dry Cleaning

Dry Cleaning Solvent
MIL−PRF−680, Type II **3**

a. Clean check valve parts with MIL−PRF−680, Type II dry cleaning solvent.

6. CHECK VALVES − INSPECTION.

Support Equipment Required

Part No./Type Designation	Nomenclature
6799675 or equivalent	Tester, spring, 0−10 pound range, 0.001 pound graduations with one pound vernier controlled scale.

a. Compress spring to a length of 0.410 in.

b. Check spring pressure with 6799675 tester (figure 2). At compressed length, pressure shall be 2.75 − 3.25 ounces.

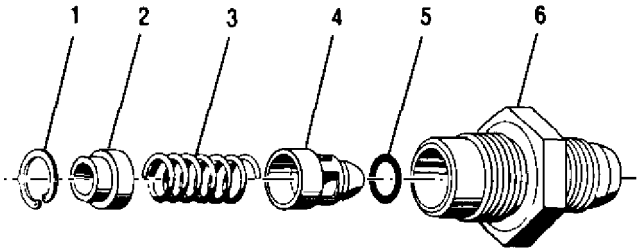

MLH010XJ

1.	Check Valve Body	4.	Spring
2.	Retaining Ring	5.	Poppet
3.	Spring Retainer	6.	Preformed Packing

Figure 1. Check Valve (Part No. HP 494100−2)

7. CHECK VALVES − ASSEMBLY.

Materials Required

Specification No./Part No.	Nomenclature
MS29513−9	Packing, preformed

a. Assemble valve using figure 1 as a guide.

8. CHECK VALVES − TESTING.

Support Equipment Required

Part No./Type Designation	Nomenclature
6799206	Stand Assembly, test, fuel accessories (procure 6799866)
6799866	Stand Assembly, test, fuel accessories (superseded 6799206)

Materials Required

Specification No./Part No.	Nomenclature
MIL−C−7024, Type II	Fluid, calibrating

NOTE

Check valves, part Nos. 6851961 and MS24593−8, are non−repairable assemblies and shall be replaced when limits specified below are exceeded.

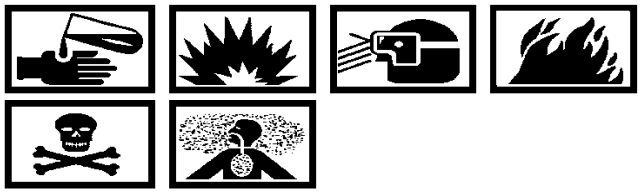

Calibrating Fluid MIL−C−7024, Type II 57

a. Use 6799206 or 6799866 stand (figure 3) with MIL−C−7024, Type II calibrating fluid maintained at a temperature of 70 − 90°F (21 − 30°C). Measure pressure by suitable gages with an accuracy within 2% of observed reading. Measure flow by a suitable method which will provide an accuracy within 1% of maximum flow or within 2% of observed reading, whichever is less.

b. Check reverse flow leakage by supplying fuel to valve outlet at 2 and 600 psi. With valve inlet exposed to atmospheric pressure for a minimum of three minutes, leakage shall not exceed 1 cc per minute.

c. Check external leakage with outlet capped. There shall be no external leakage with 900 − 950 psi pressure supplied to inlet for a minimum of three minutes.

d. Valve shall complete five cycles while discharging to atmospheric pressure with inlet flow varied from 0 − 2000 pounds per hour and returned to 0 pounds per hour.

e. Valve shall crack open at a pressure of not less than one psi at inlet with outlet at atmospheric pressure.

f. Flow schedule shall be observed with valve discharging to atmospheric pressure per table 1.

Table 1. Check Valve Flow Schedule

Fuel Supply (pph)	Max. Pressure Drop (psi)
50	4.0
1000	6.0
2000	10.0

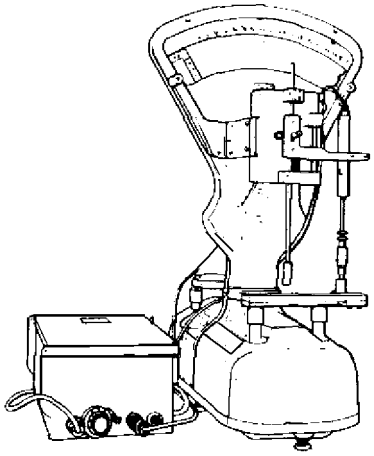

Figure 2. 6799675 Spring Tester, 0−10 Pound Range

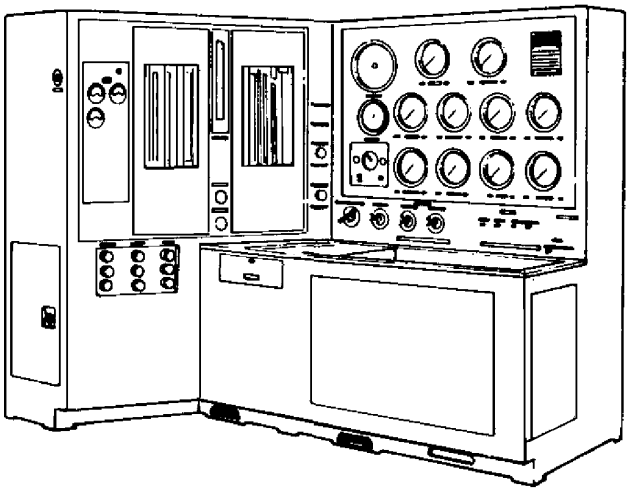

Figure 3. 6799206 or 6799866 Fuel Accessories Test Stand Assembly

DEPOT MAINTENANCE

CLEANING AND TESTING

FUEL SPRAY NOZZLE

Reference Material

Fuel Nozzle Test Stand Operation and Maintenance Instructions with Parts List . . . . . S.O. 88144

Alphabetical Index

Subject **Page No.**

Fuel Spray Nozzle 2
Cleaning 2
Testing 2
Air Blast Circuit Test 3
Flow Calibration Test 3
Hysteresis Check 3
Patternator Test 3
Pressure Test 3
Spray Angle Test 3
Introduction 2

Record of Applicable Technical Directives

None

1. **INTRODUCTION.**

2. This work package (WP) provides the instructions for cleaning and testing of the single entry fuel spray nozzles used on the T56−A−427 turboprop engine.

3. **FUEL SPRAY NOZZLE.**

4. FUEL SPRAY NOZZLE − CLEANING.

Materials Required

Specification No./Part No.	Nomenclature
MIL−C−19853	Multisol
——	Water, distilled

Carbon Remover Compound
MIL−C−19853 **63**

NOTE

Any fuel nozzle that can not be cleaned should be returned to the Manufacturer:

Parker Hannifin Corporation
Gas Turbine Fuel Systems Division
7777 N. Glen Harbor Blvd.
Glendale, AZ 85307 U.S.A.

a. Place nozzle assembly in Multisol solvent at room temperature for 12 hours.

b. After soaking, clean nozzle assembly tip with a stiff bristle brush using Multisol solvent.

c. Rinse nozzle assembly thoroughly with distilled water and visually inspect for evidence of any remaining carbon. If carbon remains, repeat steps a. through c.

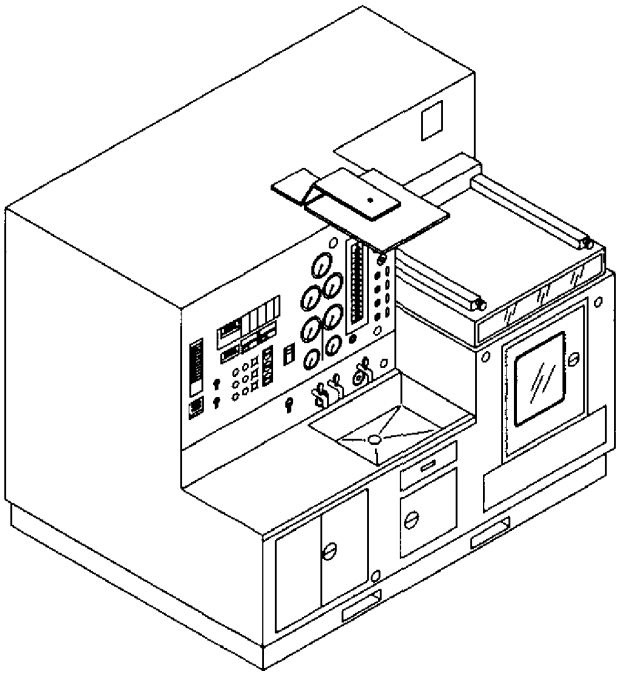

ZZT496XG

Figure 1. 23034308 Fuel Nozzle Test Stand

d. Flush fuel nozzle air passages using 150 psi distilled water.

Compressed Air **56**

e. Dry nozzle assembly pilot and main fuel circuits with 150 psi, clean, dry compressed air for 10−15 seconds after all traces of water mist are gone.

f. Dry nozzle assembly exterior with 30 psi clean, dry, compressed air.

g. Test fuel nozzle per paragraph 5, this WP.

5. FUEL SPRAY NOZZLE − TESTING.

Support Equipment Required

Part No./Type Designation	Nomenclature
23034308	Test stand, fuel nozzle

Materials Required

Specification No./Part No.	Nomenclature
MIL−C−7024, Type II	Fluid, calibrating
MIL−PRF−6081	Oil, lubricating (Grade 1010)

NOTE

Any fuel nozzle that does not meet acceptance testing should be returned to the Manufacturer:

Parker Hannifin Corporation
Gas Turbine Fuel Systems Division
7777 N. Glen Harbor Blvd.
Glendale, AZ 85307 U.S.A.

a. Install fuel nozzle assembly on 23034308 test stand (figure 1).

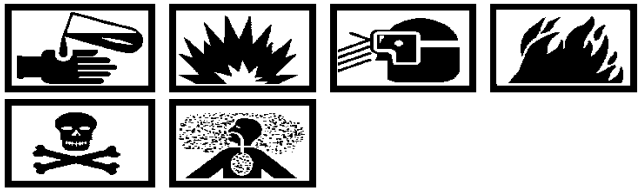

Calibrating Fluid MIL−C−7024, Type II 57

Lubricating Oil, MIL−PRF−6081, (Grade 1010) 7

b. Using MIL−C−7024, type II calibrating fluid, perform all acceptance test procedures per S.O. 88144 operation and maintenance instructions. Upon satisfactory completion of all tests, nozzle assembly shall be flushed and preserved with MIL−PRF−6081 Grade 1010 oil.

6. Flow Calibration Test.

a. Check flow calibration at various pressures per Table 1.

Table 1. Flow Calibration Test

Fuel Pressure (psig)	Average Nozzle Flow lb/hr	Flow Limits lb/hr.	
		Min	Max
100	45.5	43.5	47.5
150	112.5	104.0	121.0
267	311.0	295.0	327.0
385	441.0	428.0	454.0

7. Spray Angle Test.

a. Measure included spray angle at a radius of 3.00 in. from nozzle tip with an increasing applied pressure as specified in Table 2. Discharge nozzle spray into room pressure.

Table 2. Spray Angle Test

Fuel Pressure (psig)	Included Spray Angle (degrees)
100	78−88
385	50−60

8. Hysteresis Check.

a. Hysteresis shall be checked at 150 and 100 psig with decreasing pressure from 385 psig. Flow shall be within 8 lb/hr of the flow obtained at 150 psi with increasing pressure and within limits specified in Table 1 at 100 psi.

9. Patternator Test.

a. Check each nozzle assembly for flow pattern of spray distribution in a six−segment patternator with nozzle assembly located over, and directly in line with the center of patternator. Flow pattern must be within the limits shown in Table 3.

Table 3. Flow Pattern Test

Fuel Pressure (psig)	Maximum Difference Between High and Low Segment Flow
100	To be determined
385	To be determined

10. Pressure Test.

a. Setup nozzle in a fixture so that outlet flow will not interfere with close observation of external areas of nozzle assembly.

b. Apply an inlet pressure of 850 − 900 psi to nozzle inlet for 30 − 60 seconds. There shall be no evidence of external leakage from any part of nozzle in that time.

11. Air Blast Circuit Test.

a. The volumetric air flow rate shall be 11.7 − 14.0 SCFM with 10 in. of water across the nozzle tip.

DEPOT MAINTENANCE

CLEANING, INSPECTION, REPAIR, AND TESTING

SPARK IGNITERS

Reference Material

None

Alphabetical Index

Subject **Page No.**

Introduction 2
Spark Igniters 2
Cleaning 2
Inspection and Repair 2
Testing 2

Record of Applicable Technical Directives

None

1. **INTRODUCTION.**

2. This work package (WP) provides the instructions for cleaning, inspection, repair, and testing of the spark igniters used on the T56−A−427 turboprop engine.

3. **SPARK IGNITERS.**

4. SPARK IGNITERS − CLEANING.

CAUTION

Do not sand blast, vapor blast or clean spark igniters in a solvent.

a. Wipe spark igniter, using a lint free cloth.

5. SPARK IGNITERS − INSPECTION AND REPAIR.

NOTE

Spark igniters cannot be regapped. During engine operation, electrodes erode (or burn away) becoming rounded. This is a natural condition and does not affect performance until electrode erodes to such an extent that it becomes shorter than the ceramic.

a. Replace igniter if non flame eroded part of shell tip becomes eroded.

b. Replace igniter if electrode is eroded or burned away shorter than the ceramic completely around the circumference and has a sharp point or edge.

c. Inspect ceramic tip for cracks. If any cracks are visible through carbon coating, replace igniter.

d. An igniter with no more than 30% of rim of the shell eroded and to a maximum depth of erosion of 3/32 in. may be reused in the same position from which it was removed.

e. An igniter exhibiting no more than 35% of rim of the shell eroded and to a maximum depth of erosion of 1/8 in. may be reused only if the two igniters are switched to the opposite engine position from which they were removed.

f. Inspect well of igniter for cracks, carbon tracking, or a heavy dirt deposit (indicating blow−by). Replace spark igniter if any of these conditions are found.

6. SPARK IGNITERS − TESTING.

Support Equipment Required

Part No./Type Designation	Nomenclature
11−4300−1	Tester, high voltage ignition

Materials Required

Specification No./Part No.	Nomenclature
DC 200	Oil, silicone

WARNING

Serious injury may result from contact with an energized spark igniter.

a. Mount spark igniter in an approved type high voltage ignition tester.

CAUTION

Care must be taken not to contaminate high tension connector well with quenching oil.

b. Quench spark gap in DC 200 oil. There shall be no spark across the gap or dielectric failure of the insulation of spark igniter either by puncture or creepage when a potential of 15,000 volts DC peak is applied across the spark igniter gap for 30 seconds.

DEPOT MAINTENANCE

TESTING

IGNITION RELAY

Reference Material

None

Alphabetical Index

Subject **Page No.**

Ignition Relay 2
Testing 2
Introduction 2

Record of Applicable Technical Directives

None

1. **INTRODUCTION.**

2. This work package (WP) provides the instructions for testing of the ignition relay used on the T56−A−427 turboprop engine.

3. **IGNITION RELAY.**

4. IGNITION RELAY − TESTING.

Support Equipment Required

Part No./Type Designation	Nomenclature
6799150	Test set, checkout, electrical components

NOTE

If ignition relay does not meet test requirements, it shall be replaced. No overhaul is recommended.

a. Supply 16 volts DC to pin C of connector. Connect grounded lights to pins D and E. If lights illuminate, a defective relay is indicated and unit shall be discarded.

b. With relay setup as in step a, supply 16 volts DC to pin A and ground pin B. Lights should illuminate, indicating continuity.

c. If step b is satisfactory, remove voltage from pin A. Reject unit if lights remain on.

d. Repeat steps a, b, and c applying 29 volts DC across pins A, B, and C instead of stated voltage.

DEPOT MAINTENANCE

CLEANING, INSPECTION, AND TEST

THERMOCOUPLE ASSEMBLY

Reference Material

Operation and Service Instruction (Thermocouple Resistance Tester) . . . . . NAVAIR 17−15AC−12

Alphabetical Index

Subject **Page No.**

Introduction 2
Thermocouple Assembly 2
Cleaning 2
Inspection 2
Test 2

Record of Applicable Technical Directives

None

1. **INTRODUCTION.**

2. This work package (WP) provides instructions for cleaning, inspection, and testing of the air cooled thermocouple assembly used in the T56−A−427 turboprop engine.

3. **THERMOCOUPLE ASSEMBLY.**

4. THERMOCOUPLE ASSEMBLY − CLEANING.

Materials Required

Specification No./Part No.	Nomenclature
MIL−PRF−680, Type II	Solvent, Dry Cleaning

Dry Cleaning Solvent
MIL−PRF−680, Type II **3**

CAUTION

Do not immerse thermocouples in, or spray with, cleaning solvents. Liquid cleaning solvents will penetrate porous magnesium oxide and cement insulation. Engine heat will vaporize the solvents leaving a residue containing carbon which causes a low resistance to ground.

a. Clean thermocouple connector studs and the top area with MIL−PRF−680, type II dry cleaning solvent on a cloth. No other cleaning is required.

5. THERMOCOUPLE ASSEMBLY − INSPECTION.

a. Replace thermocouples having any of the following conditions:

(1) Diametral wear on the 0.299 − 0.295 in. probe diameter in excess of 0.020 in. local wear.

(2) Wear on the 0.192 − 0.182 in. probe shank diameter in excess of 0.020 in. (figure 1)

(3) Bent or burred probe.

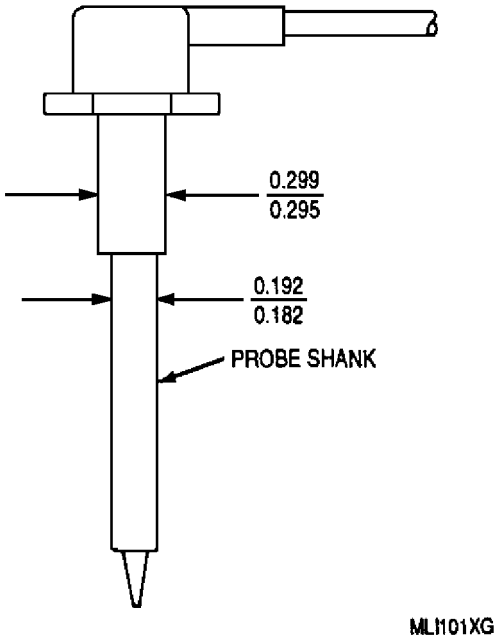

Figure 1. Interstage Thermocouple

6. THERMOCOUPLE ASSEMBLY − TEST.

Support Equipment Required

Part No./Type Designation	Nomenclature
23030189	Tester, thermocouple resistance

a. Using thermocouple resistance tester (1, figure 2), test thermocouple as follows:

(1) Plug tester into 100−120 VAC, 50−60 Hz power source.

(2) Install thermocouple (8) in contact housing cavity. Connect terminals to studs and install cap (9).

(3) Set POWER switch (3) to ON. Indicator light (4) illuminates.

NOTE

If thermocouple under test has an open circuit there will not be a response on the D.C. ampere meter.

(4) Adjust CURRENT ADJUST control (2) to 10 amperes while observing D.C. AMPERES meter (5).

(5) With D.C. AMPERES meter set at 10 amperes, observe and note reading on OHMS meter (6).

(6) Set POWER switch to off. Indicator light goes out.

(7) Set pointer (7) on OHMS meter to reading noted in step (5).

(8) Allow thermocouple to cool to room temperature.

(9) Set POWER switch to ON. Indicator light illuminates.

(10) Observe OHMS meter for five seconds. Discard thermocouple if one of the following conditions exist:

(a) Open circuit− DC AMPERES meter remains at zero.

(b) Deterioration−resistance drifts more than 0.015 ohms in five seconds.

(c) OHMS meter indicates a full scale reading.

(11) Set POWER switch to OFF. Indicator light goes out.

(12) Allow thermocouple to cool to room temperature and remove from tester.

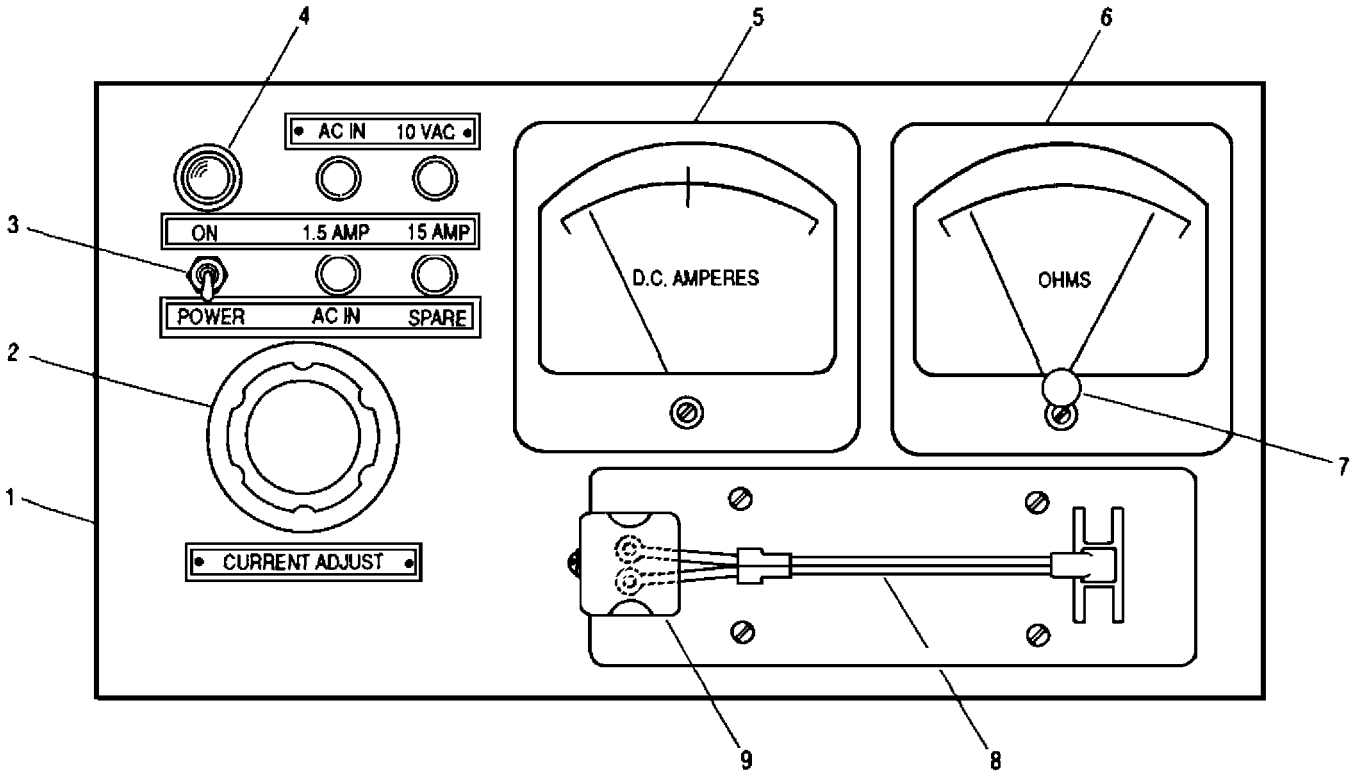

1. Tester
2. Current Adjust Control
3. Switch
4. Indicator Light
5. DC Amperes Meter
6. Ohms Meter
7. Pointer
8. Thermocouple
9. Cap

Figure 2. 23030189 Thermocouple Resistance Tester Details

DEPOT MAINTENANCE

CLEANING, INSPECTION, DISASSEMBLY, REPAIR, ASSEMBLY, AND TESTING

POWER UNIT WIRING HARNESS ASSEMBLIES
SPECIAL PURPOSE CABLE ASSEMBLIES
SPARK IGNITER LEAD ASSEMBLIES
THERMOCOUPLE HARNESS ASSEMBLIES
THERMOCOUPLE HARNESS TERMINAL ASSEMBLY

Reference Material

Electrical Wiring . . . . . NAVAIR 01−1A−505
Standard General Requirements for Electronic Equipment . . . . . MIL−STD−454, Requirement 5

Alphabetical Index

Subject **Page No.**

Introduction 2
Power Unit Left Hand (LH) (W/EMS) Shielded Branched Wiring Harness Assembly, Right Hand (RH) Wiring Harness Assembly, and Shielded Interconnecting Wiring Harness Assembly 2
Assembly 2
Cleaning 2
Disassembly and Repair 2
Inspection 2
Testing 2
Spark Igniter Lead Assemblies 6
Cleaning 6
Disassembly 6
Inspection 6
Repair and Assembly 7
Testing 8
Turbine Thermocouple Wiring Harness 8
Assembly 9
Cleaning 9
Disassembly 9
Inspection 8
Repair 9
Testing 9

Record of Applicable Technical Directives

None

1. **INTRODUCTION.**

2. This work package (WP) provides the instructions for cleaning, inspection, disassembly, repair, testing, and assembly of the electrical harness, cable, and lead assemblies used on the T56−A−427 turboprop engine. The following assemblies are included.

- Power Unit Left Hand (W/EMS) Shielded Branched Wiring Harness
- Right Hand Wiring Harness Assembly
- Shielded Interconnecting Wiring Harness Assembly
- Thermocouple Wiring Harness Assembly
- Spark Igniter Lead Assemblies

3. POWER UNIT LEFT HAND (LH) (W/EMS) SHIELDED BRANCHED WIRING HARNESS ASSEMBLY. RIGHT HAND (RH) WIRING HARNESS ASSEMBLY. AND SHIELDED INTERCONNECTING WIRING HARNESS ASSEMBLY. (figures 1 through 3)

4. LH AND RH, AND INTERCONNECTING WIRING HARNESS ASSEMBLIES − CLEANING.

Materials Required

Specification No./Part No.	Nomenclature
MIL−PRF−680, Type II	Solvent, Dry Cleaning

a. Clean harness assemblies.

b. Clean cable assemblies, except obvious scrap, before inspection.

c. Use clean, dry, lint free cloths for cleaning harness and cable assemblies.

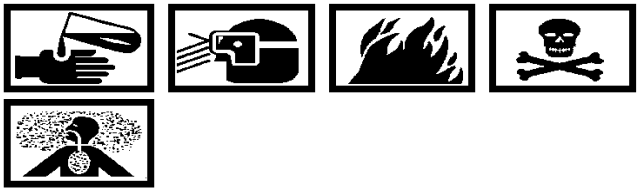

Dry Cleaning Solvent
MIL−PRF−680, Type II **3**

d. Use a MIL−PRF−680, type II dry cleaning solvent saturated cloth only as a last resort.

e. Avoid drastic cleaning measures such as immersion in solvent, blasting, scraping, or mishandling.

f. In cases where it has been necessary to remove grease or corrosive deposits by the use of dry cleaning solvent, dry the harness thoroughly in an oven at approximately 200°F (93°C) temperature for at least two hours before the inspection or electrical check is made.

5. LH AND RH, AND INTERCONNECTING WIRING HARNESS ASSEMBLIES − INSPECTION.

NOTE

A close visual inspection for physical damage should be followed by continuity and insulation tests.

a. Inspect shrink sleeving and electrical plugs and receptacles for damage or deterioration.

b. Inspect electrical plugs and receptacles for broken or damaged sockets or pins.

6. LH AND RH, AND INTERCONNECTING WIRING HARNESS ASSEMBLIES − DISASSEMBLY AND REPAIR.

a. To be determined.

7. LH AND RH, AND INTERCONNECTING WIRING HARNESS ASSEMBLIES − ASSEMBLY.

a. To be determined.

8. LH AND RH, AND INTERCONNECTING WIRING HARNESS ASSEMBLIES − TESTING.

Support Equipment Required

Part No./Type Designation	Nomenclature
HV2.5	Megohmmeter

a. Each circuit shall pass a continuity test and an insulation resistance test, using a megohmmeter.

CAUTION

To prevent damage to LH harness assembly diodes, do not perform high voltage insulation resistance test across any combination of the following contacts: L and M of main disconnect connector; A, B, or C of fuel valve solenoid connector; A or B of drain valve connector; or D of ignition relay connector.

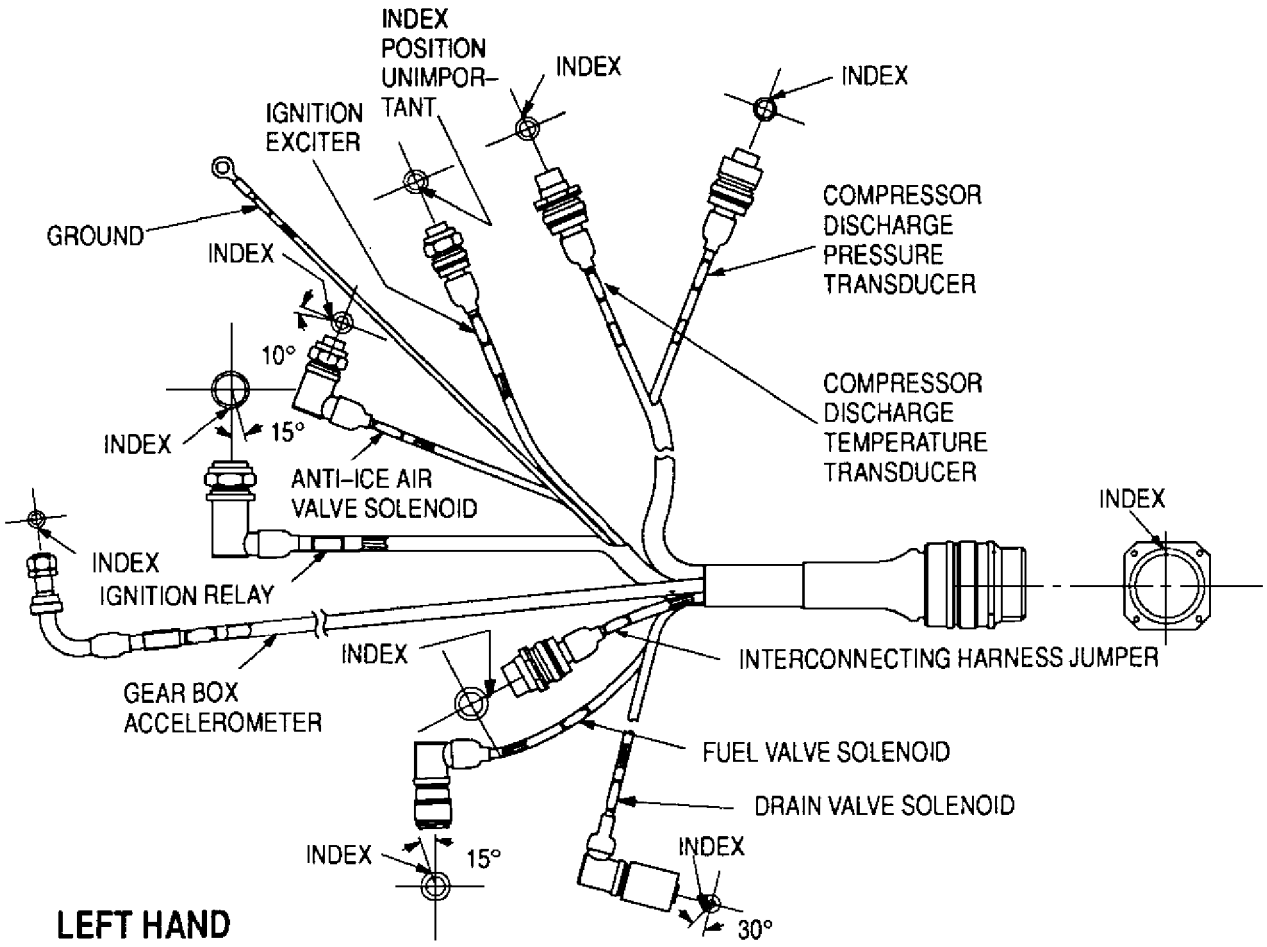

MLI001AF

Figure 1. Power Unit Left Hand (W/EMS) Shielded Branched Wiring Harness Assembly − Connector Index Locations

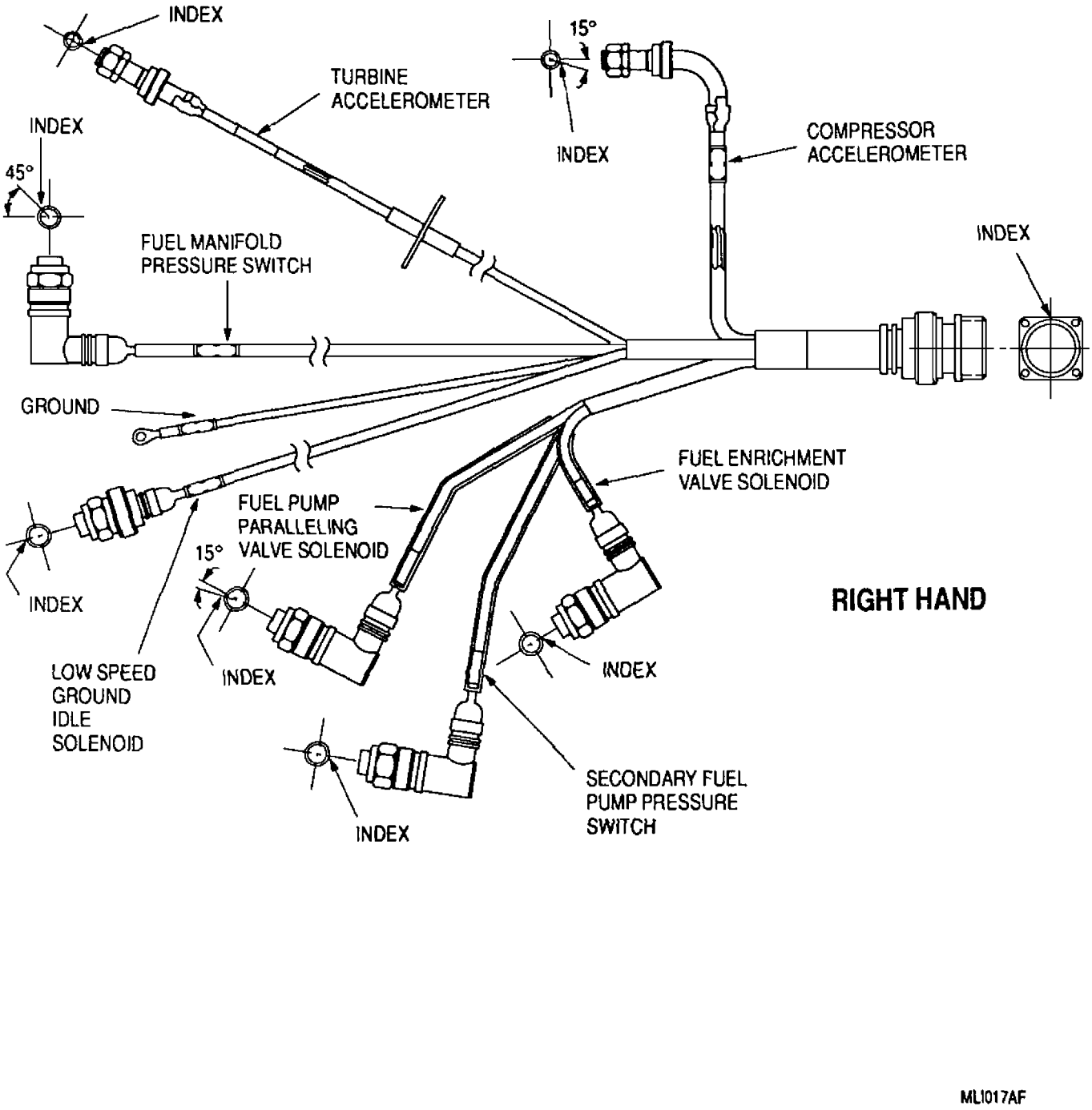

Figure 2. Power Unit Right Hand Wiring Harness Assembly − Connector Index Locations

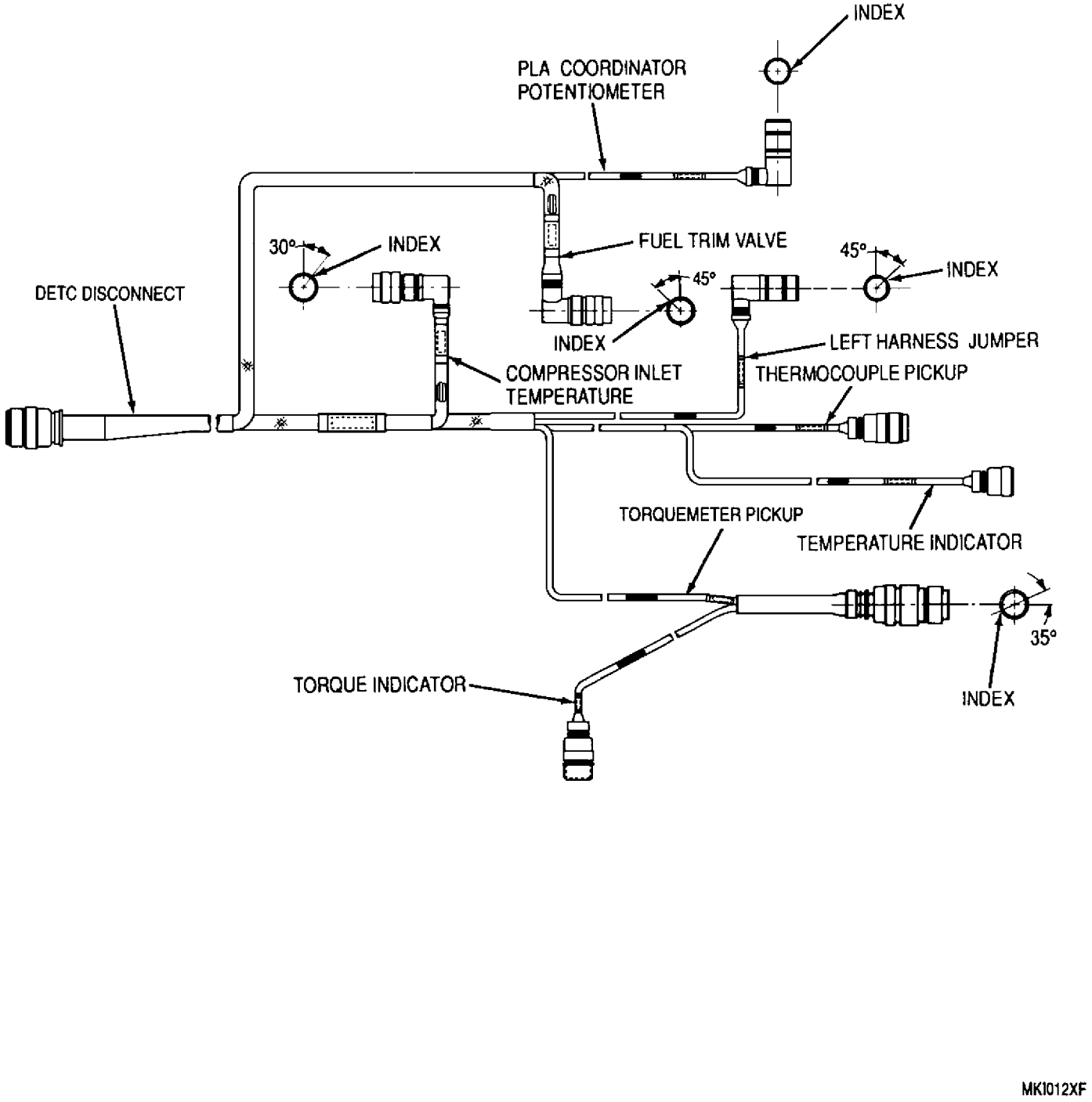

Figure 3. Shielded Interconnecting Wiring Harness Assembly − Connector Index Locations

b. Insulation resistance test shall be made from each circuit to all other circuits, including shielding and if ungrounded to shell of each connector.

c. Test shall be made, using 500 volt DC for a minimum of 10 seconds.

d. Minimum resistance acceptable is 500,000 ohms.

9. **SPARK IGNITER LEAD ASSEMBLIES.** (figure 4)

10. SPARK IGNITER LEAD ASSEMBLIES − CLEANING.

Materials Required

Specification No./Part No.	Nomenclature
MIL−PRF−680, Type II	Solvent, Dry Cleaning

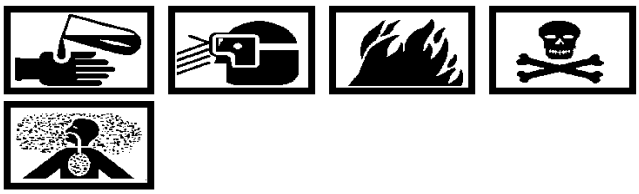

Dry Cleaning Solvent
MIL−PRF−680, Type II **3**

CAUTION

Do not saturate or dip parts in solvent as damage to insulation will result.

a. Wipe lead assemblies using a clean, dry, lint free cloth lightly dampened in MIL−PRF−680, type II dry cleaning solvent.

11. SPARK IGNITER LEAD ASSEMBLIES − INSPECTION.

a. Inspect ignition terminals for evidence of silicone rubber softening, swelling, decomposing, or sticking to the mating ceramic igniter well. If any of these conditions are evident, replace terminal.

b. Inspect flexible conduit (9, figure 4) for dents, kinks or damage to the braided outer covering.

c. Damage to cover only, such as broken strands, chafing, or nicking up to 1.00 in. in length, is acceptable for repair providing inner lining under braid is not punctured.

d. Repair frayed or broken braid wires, if within limits specified, per paragraph 13, this WP.

e. Inspect firewall flange, conduit and nuts (6) for damage.

f. Inspect spring assembly for loose or corroded springs.

g. Inspect terminal assembly (7) for damage.

h. Inspect sockets (3) for broken or damaged segments.

NOTE

Do not twist terminal ends.

i. Inspect for broken strands in conductor cable (8) by giving terminal ends a firm but even pull. If sockets are loose, when pulled, or damage to cable is evident, conductor cable must be replaced per paragraph 13, this WP.

12. SPARK IGNITER LEAD ASSEMBLIES − DISASSEMBLY.

NOTE

Disassembly shall be accomplished only when inspection or test reveals that repairs are required.

a. Coil lead assembly to a diameter of 8.004 − 10.00 in. to extend parts from one end. Slide spring assembly (5, figure 4) down the cable away from the socket (3).

b. Slip socket (3) out of connector (4) to expose retainer washer (2). Remove washer with a retainer washer removal tool (figure 5) placed between washer and connector sleeve then “pinch−in” four fingers of socket (3, figure 4) at exposed end by axial pressure using a pin removal tool (figure 5) or equivalent.

NOTE

If washer does not freely disengage socket, it may be shifted to center by rocking removal pin tool slightly or by using a small screwdriver.

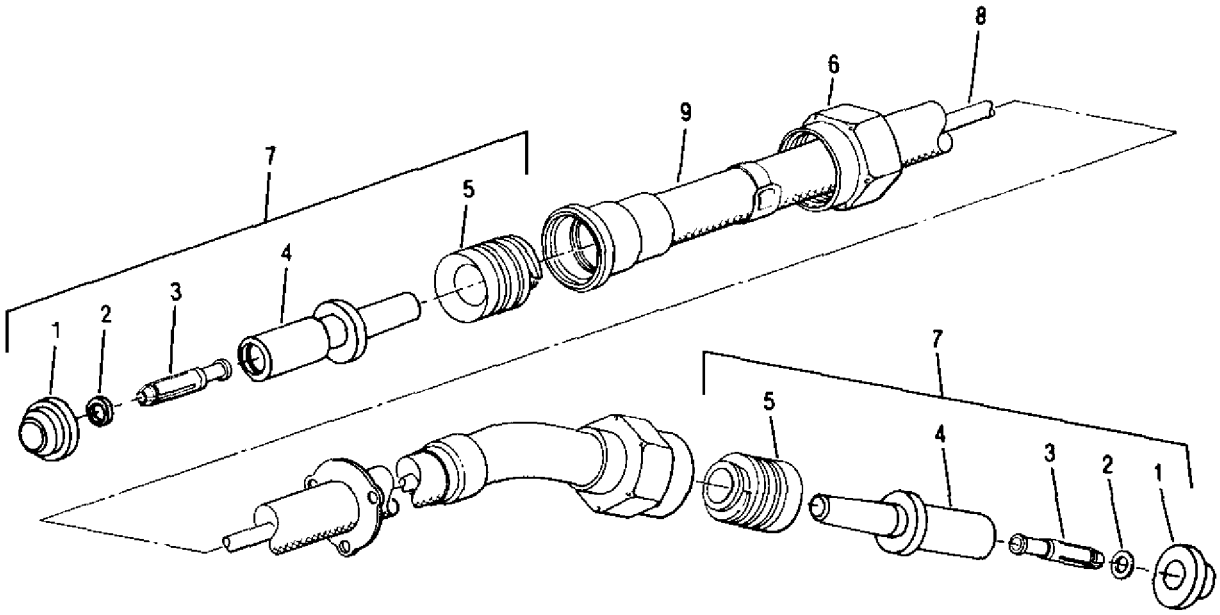

1. Washer
2. Retaining Washer
3. Socket
4. Connector Assembly
5. Spring Assembly
6. Nut
7. Terminal Assembly
8. Cable
9. Flexible Conduit Assembly

Figure 4. Spark Igniter Lead Details

c. Remove connector assembly (4, figure 4), washer (1) and spring assembly (5) from spark igniter lead.

d. Withdraw cable (8) and components from the opposite end of flexible conduit assembly (9) and disassemble parts in the same manner as steps b, and c.

13. SPARK IGNITER LEAD ASSEMBLIES − REPAIR AND ASSEMBLY.

Materials Required

Specification No./Part No.	Nomenclature
AMS 3411	Flux, Silver Brazing, High Temperature
QQ−S−571 AG−5.5	Solder, silver
MIL−PRF−680, type II	Solvent, dry cleaning

a. Repair broken braid in flexible conduit assembly (9, figure 4) as follows:

(1) Remove cable (8) from conduit.

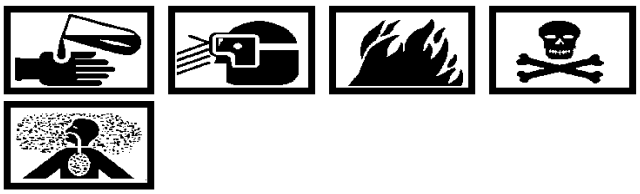

Dry Cleaning Solvent
MIL−PRF−680, Type II **3**

(2) Clean damaged area with MIL−PRF−680, type II dry cleaning solvent and straighten all broken strands.

(3) Use QQ−S−571, AG−5.5 sliver solder, and AMS 3411 flux per MIL−STD−454, Requirement 5.

(4) Apply solder to damaged area using an electrical resistance or transformer type soldering process and a carbon tipped iron. Cover damaged area with solder without prolonged concentration of heat.

CAUTION

Use care not to damage adjacent braid.

(5) Remove any protruding braid ends and excess solder with a smooth file.

(6) Examine conduit bore where possible, for any signs of burning of inner lining. Discoloration is acceptable but any opening in liner is cause for rejection.

b. Re−cable and assemble as follows: (figure 4)

NOTE

When new cabling is installed, new sockets (3) shall be used. Connector assemblies (4), spring assemblies (5), retaining washers (2), and washers (1) may be reused if serviceable.

(1) Cut cabling for 6829298 assembly 52.12 in. and for 6829299 assembly to 46.62 in.

(2) Install a spring assembly (5), a connector assembly (4), and a washer (1) loosely on one end of a desired cable.

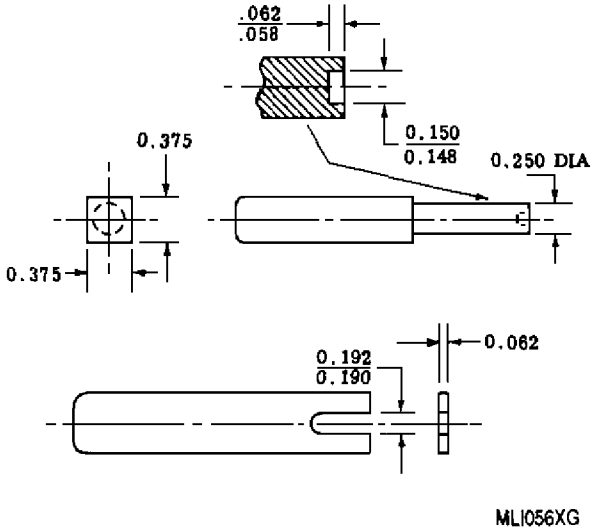

Figure 5. Retainer Washer and Pin Removal Tools

CAUTION

Care must be taken not to cut strands when stripping cable.

(3) Strip cable 1/4 in. and attach socket (3) per NAVAIR 01−1A−505. Use at least four indentations per socket. Connection shall withstand 25 pounds pull−off tension.

(4) Snap on retainer washer (2) making sure that washer concentrically fits annular groove in socket (3) without interference from small burrs or irregularities.

(5) Insert the opposite end of cable (8) into either end of flexible conduit assembly and draw taut, from the other end, retracing socket (3) fully into connector (4).

(6) With conduit assembly straight and unstressed, cut cable to a length so that it extends 7/8 in. beyond the face of conduit.

(7) Strip cable 1/4 in. and install second socket as in step (3).

(8) Coil flexible conduit assembly (9) to a diameter of approximately five in. to provide maximum extension of cable and snub cable against conduit with thumb nail or a dull tool which will not damage cable insulation. Install second spring assembly (5) connector (4), and washer (1).

(9) With socket (3) extended through connector (4) snap on retainer washer (2) making certain that washer fits concentrically in annular groove without interference from burrs.

(10) Retract socket carefully into connector (4) to complete the assembly.

14. SPARK IGNITER LEAD ASSEMBLIES − TESTING.

a. Each lead assembly shall pass a low voltage continuity and ground test.

b. Each lead assembly shall be subjected to 15,000 volts DC peak for 30 seconds.

c. There shall be no indication of dielectric failure of the insulation either by puncture or creepage.

15. **TURBINE THERMOCOUPLE WIRING HARNESS.**

16. TURBINE THERMOCOUPLE WIRING HARNESS − INSPECTION.

NOTE

A close visual inspection for physical damage should be followed by continuity and insulation tests.

a. Inspect harness assembly terminal blocks for damaged or loose studs, bent or broken terminal tugs and broken mounting brackets.

b. Inspect metal braid for broken wires.

c. Inspect connector for loose sockets. No looseness acceptable, reject harness.

17. TURBINE THERMOCOUPLE WIRING HARNESS−CLEANING.

Materials Required

Specification No./Part No.	Nomenclature
MIL−PRF−680, type II	Solvent, dry cleaning

CAUTION

Do not immerse thermocouple harness assemblies in, or spray with, cleaning solvents. Liquid cleaning solvents will penetrant porous magnesium oxide and cement insulation. Engine heat will vaporize the solvents leaving a residue containing carbon which causes a low resistance to ground and an unreliable reading.

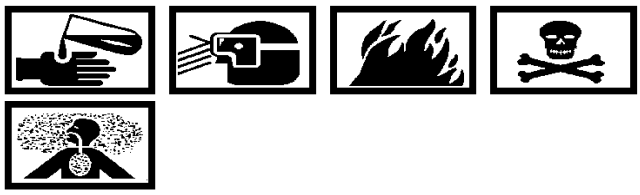

Dry Cleaning Solvent
MIL−PRF−680, Type II **3**

a. Wipe harness assembly with clean cloth dampened with MIL−PRF−680, type II dry cleaning solvent.

18. TURBINE THERMOCOUPLE WIRING HARNESS − DISASSEMBLY.

a. To be determined.

19. TURBINE THERMOCOUPLE WIRING HARNESS − REPAIR.

Materials Required

Specification No./Part No.	Nomenclature
6845690−3	Tape, insulating

a. Straightening bent terminal block lugs is acceptable provided the lug is not cracked or wire is damaged after straightening.

b. Weld replacement Chromel and Alumel studs to lugs using GTAW−MA method and Alumel or Chromel wire as necessary.

c. Repair metal braid by wrapping damaged area with 6845690−3 insulating tape.

20. TURBINE THERMOCOUPLE WIRING HARNESS − ASSEMBLY.

a. To be determined.

21. TURBINE THERMOCOUPLE WIRING HARNESS − TESTING.

Support Equipment Required

Part No./Type Designation	Nomenclature
260−6XLP	Multimeter

a. Using 260−6XLP multimeter, with scale set at RZ1, check continuity from each connector contact to the respective terminal studs.

NOTE

All Alumel and Chromel resistances should be about the same.

b. Check resistance between Chromel and Alumel circuits or to ground from any Chromel and Alumel studs. The resistance shall not be less than 10,000 ohms at standard room temperature.

c. Bake any assembly two hours at 200°F (93°C) if it fails to show the minimum required resistance.

d. Replace any assembly which fails to pass the resistance test after two hours drying−out operation.

DEPOT MAINTENANCE

INSPECTION, REPAIR, AND TESTING

TORQUEMETER PICKUP ASSEMBLY

Reference Material

None

Alphabetical Index

Subject **Page No.**

Introduction 2
Torquemeter Pickup Assembly 2
Inspection 2
Repair 2
Testing 2

Record of Applicable Technical Directives

None

1. **INTRODUCTION.**

2. This work package (WP) provides the instructions for inspection, repair, and testing of the torquemeter pickup assemblies used in the T56−A−427 turboprop engine.

3. **TORQUEMETER PICKUP ASSEMBLY.**

4. TORQUEMETER PICKUP ASSEMBLY − INSPECTION.

a. Inspect torquemeter pickup assembly. Refer to table 1.

5. TORQUEMETER PICKUP ASSEMBLY − REPAIR.

Materials Required

Specification No./Part No.	Nomenclature
AMS 3132	Resin
MIL−PRF−680, Type II	Solvent, Dry Cleaning

a. Repair torquemeter pickup assembly. Refer to Disposition column, table 1.

b. Replace torquemeter pickup assembly not within serviceable limits after repair.

6. TORQUEMETER PICKUP ASSEMBLY − TESTING.

Support Equipment Required

Part No./Type Designation	Nomenclature
PSM−4C	Multimeter

CAUTION

Tests are to be made with a low current type ohmmeter to avoid possible damage to coils.

a. Torquemeter pickup assembly is acceptable for use providing a continuity check between pins of assembly shows a resistance within limits specified in figure 1.

Table 1. Torquemeter Pickup Assembly − Inspection and Repair

Condition	Serviceable Limits	Repairable Limits	Disposition
Cracked insulator.	Not serviceable.	Not repairable.	Condemn pickup exceeding serviceable limits.
	Dry Cleaning Solvent MIL−PRF−680, Type II		**3**
Poleface wear or rubbing.	0.004 in. max depth.	Exceeds serviceable limits.	Clean affected area with MIL−PRF−680, type II dry cleaning solvent and coat lightly with AMS 3132.

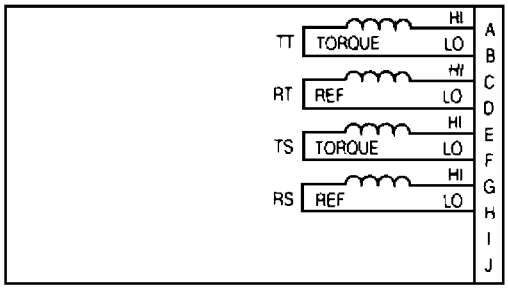

MLS083XG

Continuity Check

Pins	Resistance (Ohms)
A to B	2.00 – 3.00
C to D	2.00 – 3.00
E to F	6.20 – 7.80
G to H	6.20 – 7.80

Figure 1. Torquemeter Pickup Assembly Checking Procedure

DEPOT MAINTENANCE

ASSEMBLY, CLEANING, INSPECTION, REPAIR, DISASSEMBLY, LUBRICATION, AND TESTING

COORDINATOR CONTROL ASSEMBLY

Reference Material

Plating and Surface Treatment of Parts . . . . . WP 018 00
Operation and Maintenance Instructions with Parts List (6872414 Test Stand) . . . . . Publication No. 69X2
Operation and Maintenance Instructions with Parts List (6893547 Test Stand) . . . . Publication No. GTP 5215

Alphabetical Index

Subject **Page No.**

Coordinator Control Assembly 3
Assembly 18
Lever Installation 22
Cleaning, Inspection, and Repair 6
Bearing and Cam Journal Metallizing Repair 10
Bushing and Sleeve Bearing Replacement 11
Coordinator Cover Pin Replacement 11
Feather Control Cam and Helical Spring 9
Feathering Shaft Assembly 6
Latch and Cam Track Clearance Check 9
Main Shaft and Gear Assembly 6
Propeller Coordinator Shaft Assembly and Propeller Coordinator Latch 6
Variable Resistor and Gear Assembly Repair 11
Variable Resistor Gear Replacement or Transfer 14
Disassembly 3

Alphabetical Index (contd)

Subject **Page No.**

Lubrication 17
Predisassembly Test 3
Testing 24
Coordinator Control Testing Using 6799286 Test Stand 24
Coordinator Control Testing Using 6872414 or 6893547 Test Stand 27
Linearity Test of Variable Resistor 31
Introduction 3

Record of Applicable Technical Directives

None

1. **INTRODUCTION.**

2. This work package (WP) provides the instructions for assembly, cleaning, inspection, repair, disassembly, lubrication, and testing of the coordinator control used on the T56−A−427 turboprop engine.

3. **COORDINATOR CONTROL ASSEMBLY.**

4. COORDINATOR CONTROL ASSEMBLY − PRE−DISASSEMBLY TEST. Prior to disassembly, test coordinator control for open circuits, failed switch, linearity, equivalent noise resistance and insulation leakage. Refer to paragraph 20, this WP, for testing. Repair or replace defective parts when coordinator control is disassembled.

5. COORDINATOR CONTROL ASSEMBLY − DISASSEMBLY.

Support Equipment Required

Part No./Type Designation	Nomenclature
23002214	Puller, feathering shaft bearing
6799328	Fixture, coordinator holding

a. Install coordinator control assembly in 6799328 holding fixture.

b. Remove self locking nuts (2 and 5, figure 1), bolts (3 and 6), fuel cutoff output lever (1), and condition arm (4).

c. Remove screw (8), coordinator pointer (7), and coordinator cap (9) from main shaft and gear assembly (43).

d. Remove bolt (12) and propeller setting arm (10) from propeller coordinator shaft assembly (37).

e. Remove bolts (21), washers (22), and cover assembly (20) from housing assembly (62). Remove data plate (13) and coordinator protractor (16) from cover assembly (20) as necessary.

f. Remove internal retaining ring (19), washers (25, 26, and 27), preformed packing (24), and bearing (23) from cover. Discard preformed packing.

g. Remove external retaining ring (28) from feathering shaft assembly (40).

h. Remove discriminator assembly (29), helical compression spring (36), feather control cam (34) and key (35), and shim or shims (33) from housing.

i. Install 23002214 bearing puller (figure 2) on housing. Insert puller into bearing bore and remove bearing (32, figure 1). Remove two washers (30 and 31).

j. Disassemble discriminator assembly (29) by removing the propeller coordinator shaft assembly (37), external retaining ring (38), propeller coordinator latch (39), thrust washer (42), feathering shaft assembly (40), and thrust washer (41) from coordinator main shaft and gear assembly (43).

NOTE

Do not disassemble the variable resistor and gear assembly (58) unless replacement of parts is indicated by testing, paragraph 20, this WP.

k. Remove variable resistor and gear assembly (58).

l. Remove screws (50 and 48), washers (51 and 49), and potentiometer adapter (47).

m. Remove screws (46), washers (47), and switch assembly (45) from variable resistor and gear assembly (63).

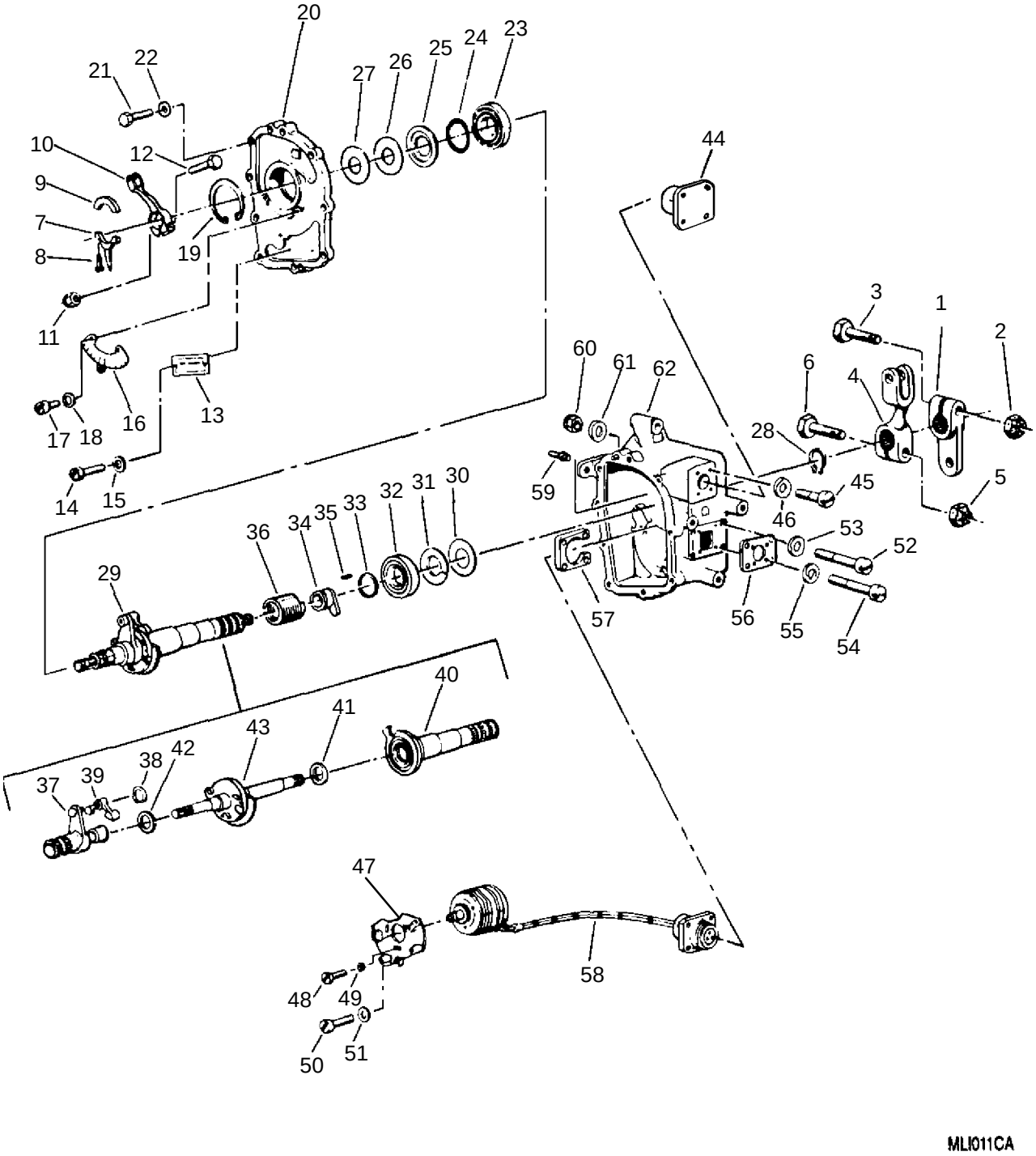

Figure 1. Coordinator Control Details (Sheet 1 of 2)

1. Fuel Cutoff Output Lever
2. Nut (Self Locking)
3. Bolt
4. Condition Arm
5. Nut (Self Locking)
6. Bolt
7. Coordinator Pointer
8. Screw
9. Coordinator Cap
10. Coordinator Propeller Setting Arm
11. Nut (Self Locking)
12. Bolt
13. Data Plate
14. Screw
15. Washer
16. Coordinator Protractor
17. Screw
18. Washer
19. Internal Retaining Ring
20. Cover Assembly
21. Bolt
22. Washer
23. Ball Bearing
24. Preformed Packing
25. Shoulder and Recessed Washer
26. Non−Metallic Washer
27. Flat Washer
28. External Retaining Ring
29. Discriminator Assembly
30. Seal Washer
31. Split Washer
32. Ball Bearing
33. Shim
34. Coordinator Feather Control Cam
35. Special Key
36. Helical Compression Spring
37. Propeller Coordinator Shaft Assembly
38. External Retaining Ring
39. Propeller Coordinator Latch
40. Coordinator Feathering Shaft Assembly
41. Teflon Thrust Washer
42. Teflon Thrust Washer
43. Coordinator Main Shaft and Gear Assembly
44. Coordinator Cover Plate
45. Screw
46. Washer
47. Potentiometer Adapter
48. Screw
49. Washer
50. Screw
51. Washer
52. Screw
53. Washer
54. Screw
55. Washer
56. Connector Mounting Plate
57. Connector Retaining Plate
58. Coordinator Variable Resistor and Gear Assembly
59. Feather Shaft Shop
60. Nut (Self Locking)
61. Washer
62. Coordinator Housing Assembly

Figure 1. Coordinator Control Detail (Sheet 2)

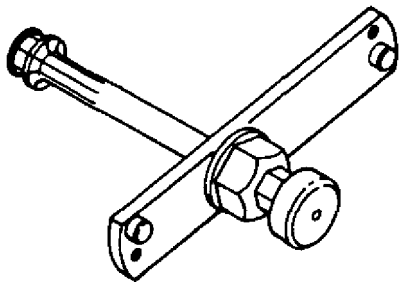

ZZT342XJ

Figure 2. 23002214 Coordinator Feathering Shaft Bearing Puller

6. COORDINATOR CONTROL ASSEMBLY − CLEANING, INSPECTION, AND REPAIR.

7. Feathering Shaft Assembly. (figure 3)

a. Check bearing journals of feathering shaft assembly (40, figure 1) for wear. Grind bearing journals only as necessary to clean up wear.

b. If the bearing journal OD is 0.8646 − 0.8745 in. chrome plate per WP 018 00 and grind to finish dimensions. If the bearing journal OD is 0.8446 − 0.8645 in. metallize per paragraph 12, this WP, and grind to finish dimension.

c. Check for wear on feathering control cam journal.

d. If the feathering control cam journal OD is 1.0522 − 1.0620 in. chrome plate per WP 018 00 and grind to finish dimensions. If OD is 1.0321 − 1.0521 in. metallize per paragraph 12, this WP, and grind to finish dimensions.

e. Wear in shaft bushings and sleeve bearings is acceptable to a maximum of 0.5025 in. for bushings and 0.8775 in. for sleeve bearings. Refer to paragraph 13, this WP, for bushing and sleeve bearing replacement.

f. Check cam surface for wear.

g. Clean up cam surface by grinding 0.002 − 0.004 in. undersize with a 0.150 − 0.210 in. radius and chrome plate per WP 018 00. Grind to finish dimensions.

h. If cam surface will not clean up with 0.004 in. metal removal, machine the surface at least 0.010 in. undersize but not more than 0.040 in. undersize with a 0.010 − 0.020 in. radius and metallize per paragraph 12, this WP Grind to finish dimensions.

i. Check the splines for damage. Stone any nicks, dents, or metal pick−up to remove high spots. Condemn any shaft assembly which shows signs of spline deformation.

8. Propeller Coordinator Shaft Assembly and Propeller Coordinator Latch. (figure 4)

a. Check bearing journal of propeller coordinator shaft assembly (37, figure 1) for wear. Grind bearing journals only as necessary to clean up wear.

b. If the bearing journal OD is 0.8646 − 0.8745 in. chrome plate per WP 018 00 and grind to finish dimensions. If OD is 0.8446 − 0.8645 in. metallize per paragraph 12, this WP, and grind to finish dimensions.

c. Wear in shaft bushings and sleeve bearings is acceptable to a maximum of 0.5025 in. for bushings and 0.8775 in. for sleeve bearings. Refer to paragraph 13, this WP, for bushing and sleeve bearing replacement.

d. Check the splines for damage. Stone any nicks, dents, or metal pick−up to remove high spots. Condemn any shaft assembly which shows signs of spline deformation.

e. Check cams of propeller coordinator latch (39) for scoring on contacting surfaces. Replace if scoring is evident.

9. Main Shaft and Gear Assembly. (figure 5)

a. Check bearing journals for wear. Grind bearing journals only as necessary to clean up wear.

b. If the bearing journal OD is 0.8640 − 0.8740 in. chrome plate per WP 018 00 and grind to finish dimensions. If the OD is 0.8440 − 0.8639 in. metallize per paragraph 12, this WP, and grind to finish dimensions.

c. Check bushing journals for wear. Grind bushing journals only as necessary to clean up wear.

d. If the bushing journal OD is 0.4885 − 0.4985 in. chrome plate per WP 018 00 and grind to finish dimensions. If the OD is 0.4685 − 0.4884 in. metallize per paragraph 12, this WP, and grind to finish dimensions.

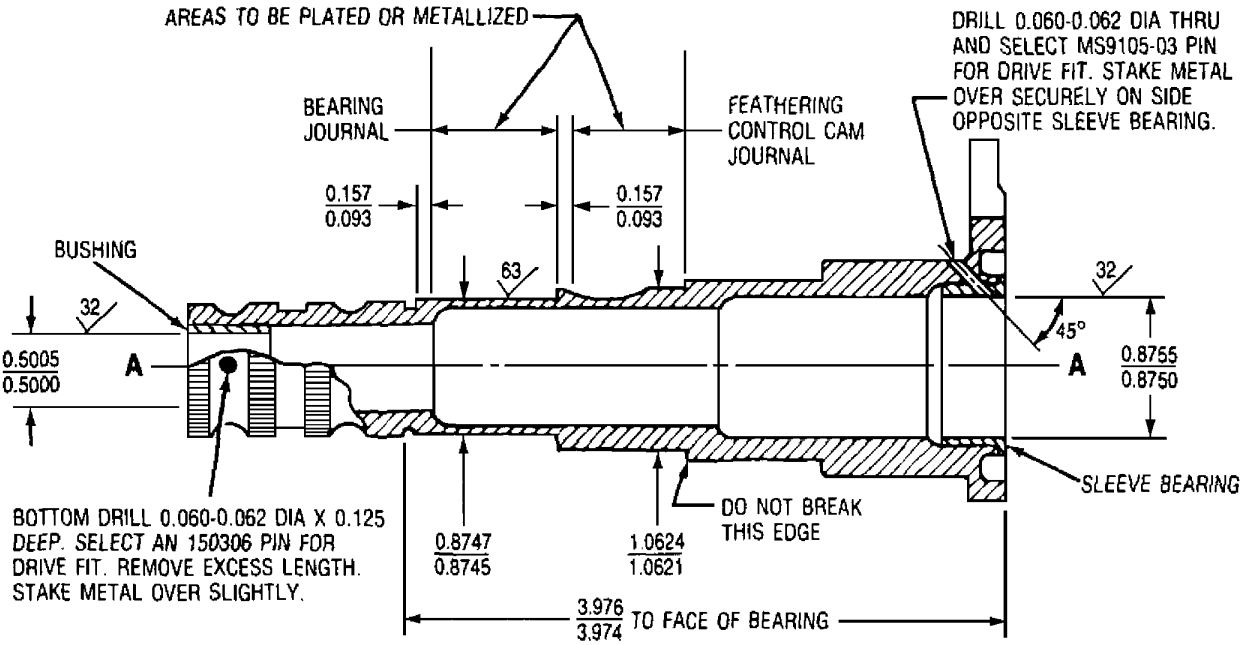

BUSHING AND JOURNAL DIA TO BE CONCENTRIC AROUND AXIS **A – A** WITHIN 0.0010 IN. FIR.

COORDINATOR FEATHERING SHAFT ASSEMBLY

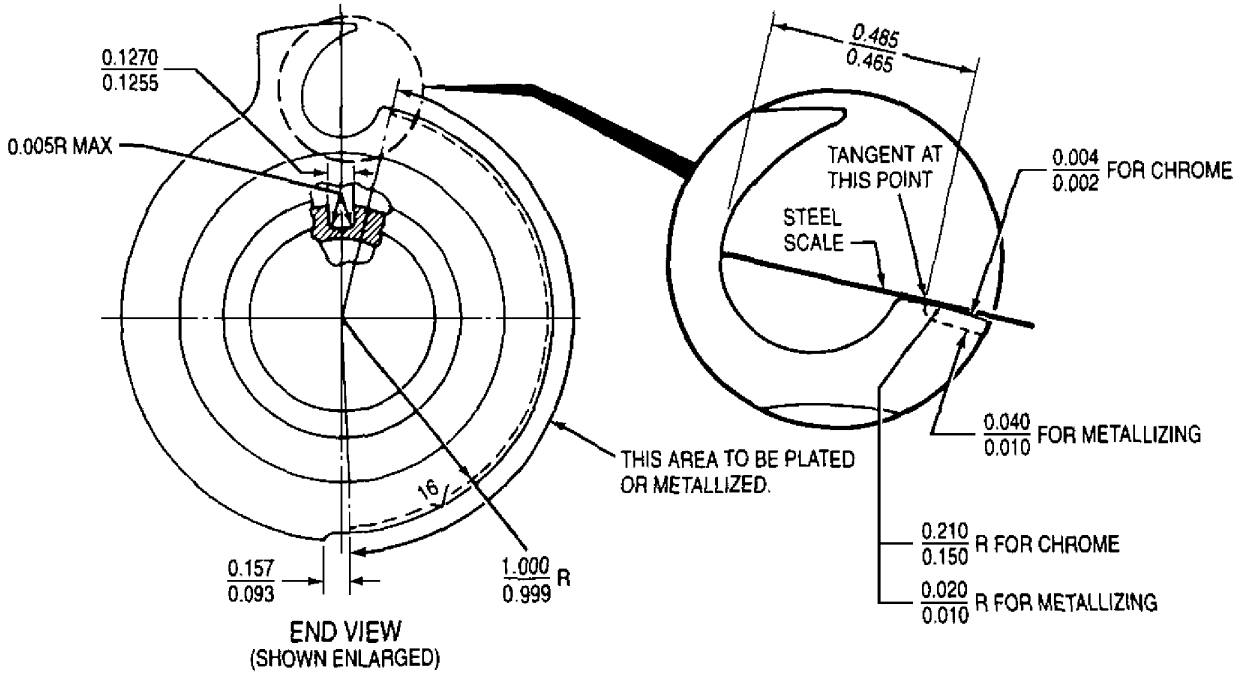

COORDINATOR FEATHERING CAM

MLI108XA

Figure 3. Coordinator Feathering Shaft Repair

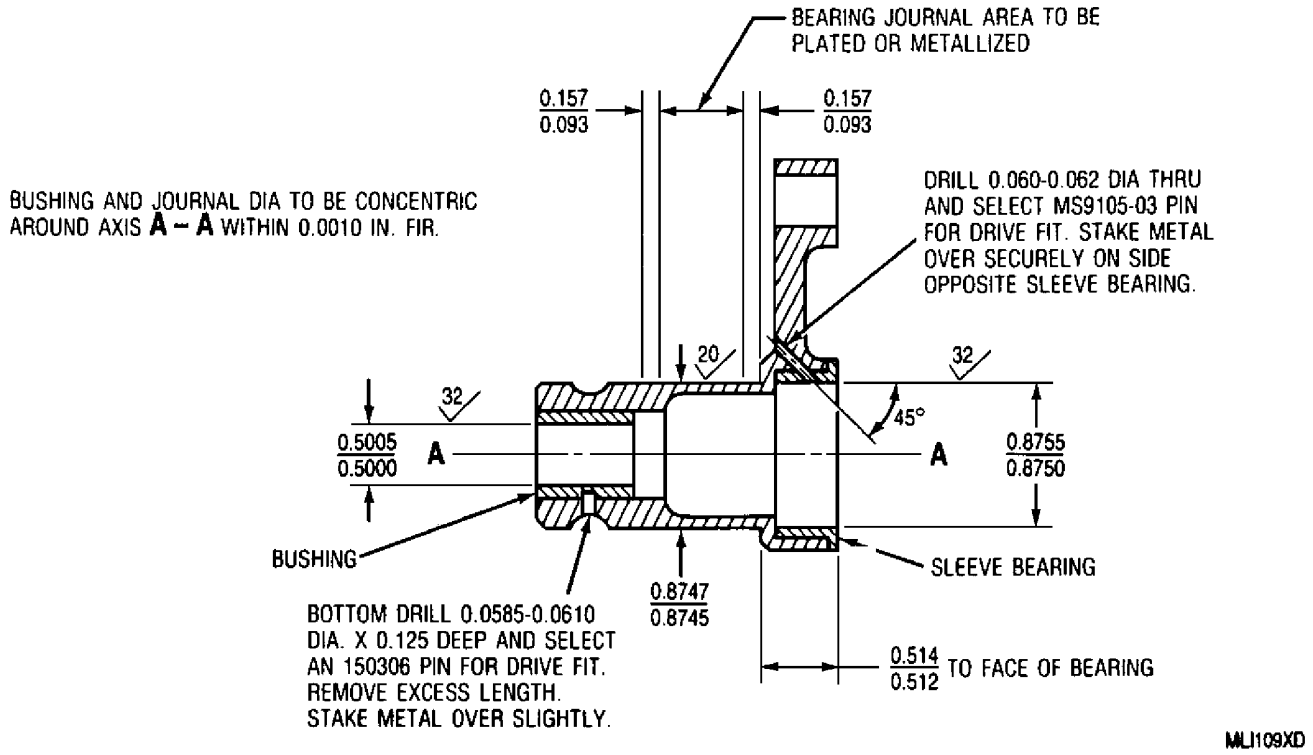

Figure 4. Propeller Coordinator Shaft Repair

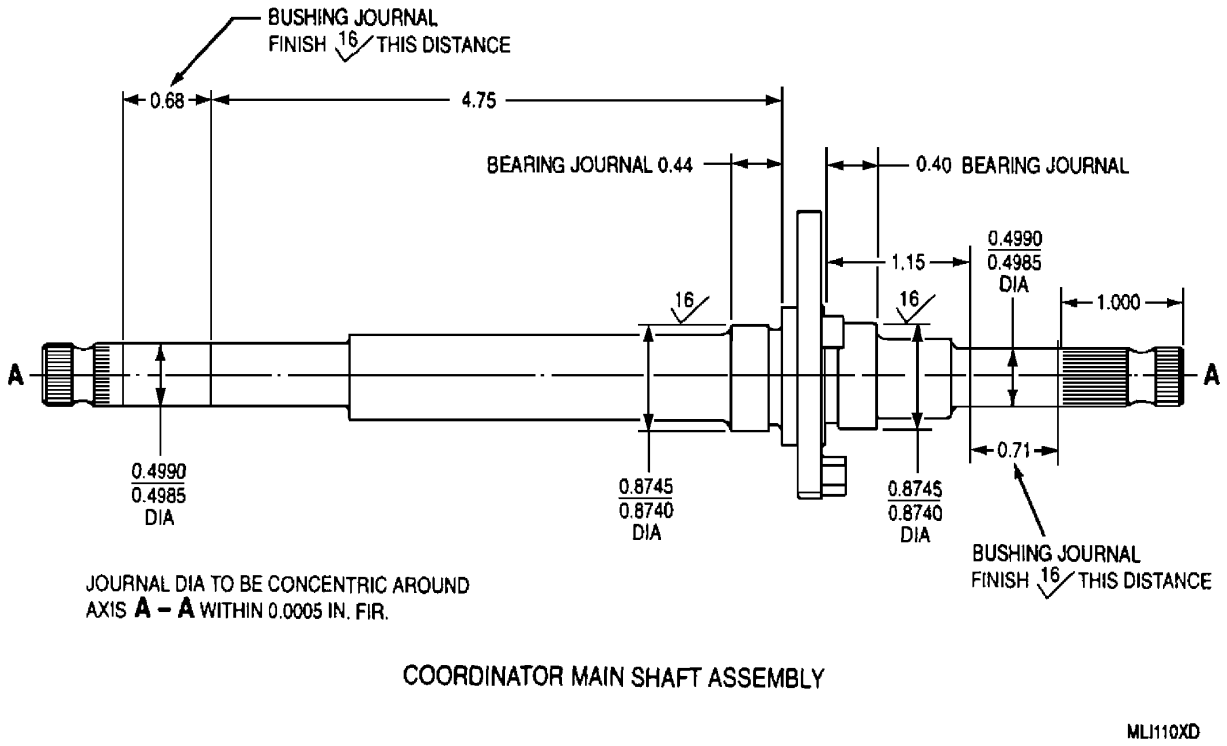

Figure 5. Coordinator Main Shaft and Gear Assembly Repair

e. Check the splines for damage. Stone any nicks, dents, or metal pick−up to remove high spots. Condemn any shaft assembly which shows signs of spline deformation.

10. Latch and Cam Track Clearance Check. (figure 6)

NOTE

Do not disassemble the discriminator assembly after performing latch and cam track clearance check.

a. Install thrust washer (41, figure 1) and feathering shaft assembly (40) on main shaft and gear assembly (43).

b. Install propeller coordinator latch (39) and external retaining ring (38) on propeller coordinator shaft assembly (37).

c. Install thrust washer (42) and propeller coordinator shaft assembly (37) on main shaft and gear assembly (43). Check minimum clearance between latch and cam track per figure 6.

11. Feather Control Cam and Helical Spring.

Support Equipment Required

Part No./Type Designation	Nomenclature
6799676	Tester, spring, 0−150 pound range, 1/4 pound graduations

a. Compress helical compression spring (36, figure 1) to a length of 1.000 in. with 6799676 spring tester (figure 7). Spring pressure at this compressed length should be 28−32 pounds.

b. Wear of grooving on end of feather control cam (34, figure 1) adjacent to the ears shall be removed by lapping or grinding.

c. Grind or lap only as necessary to cleanup wear.

d. If minimum width dimension of 1.170 in. is exceeded, repair by chrome plating per WP 018 00, to a thickness of 0.0005 − 0.010 in. after finish grind.

e. Finish grind to a width of 1.170 − 1.175 in. (figure 8).

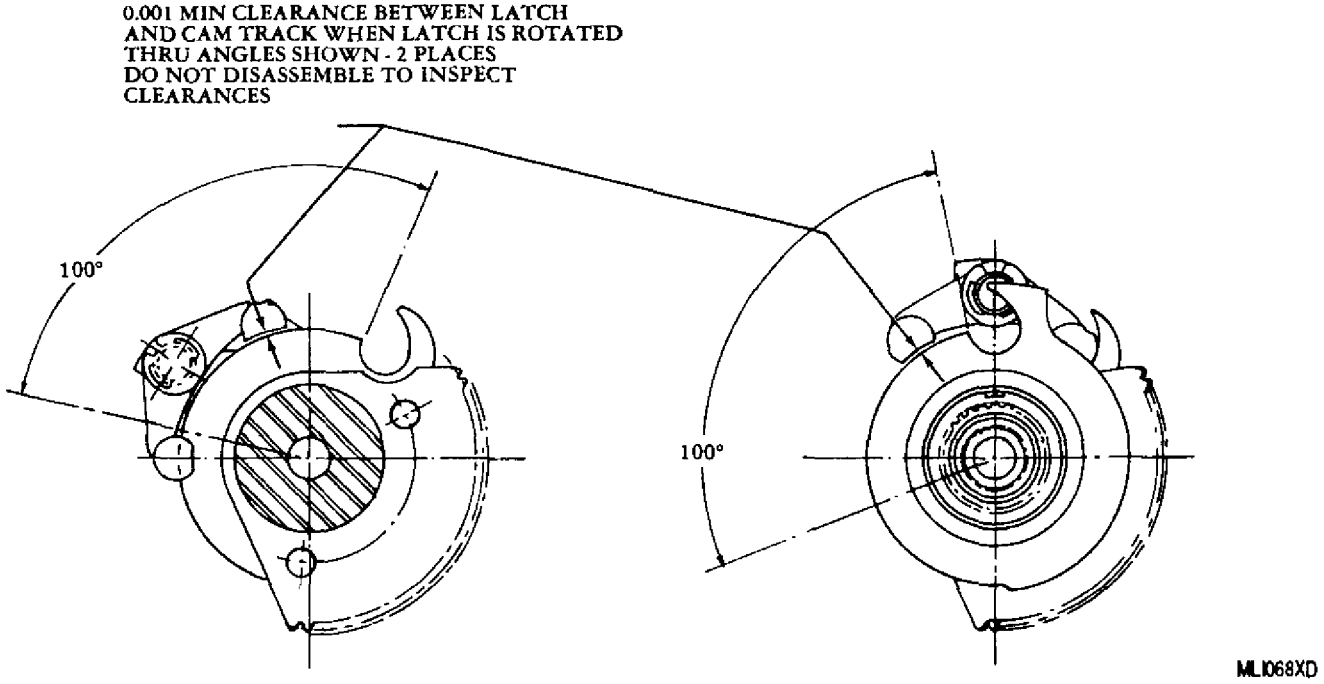

Figure 6. Latch and Cam Track Clearance

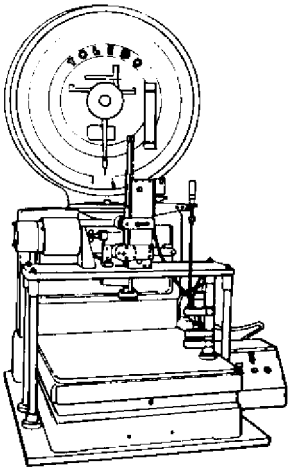

ZZT344XE

Figure 7. 6799676 Spring Tester

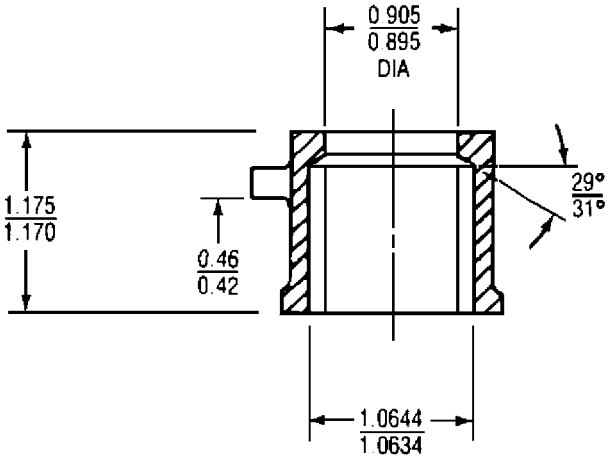

MLI111

Figure 8. Coordinator Feathering Control Cam Repair

12. Bearing and Cam Journal Metallizing Repair.

Support Equipment Required

Part No./Type Designation	Nomenclature
Type 4E	Gun, metallizing

Materials Required

Specification No./Part No.	Nomenclature
Metcolloy No. 2	Wire
MIL−PRF−680, Type II	Solvent,dry cleaning
Sprabond	Bonding material
——	Grit, Aluminum Oxide, Coarse

Dry Cleaning Solvent MIL−PRF−680, Type II **3**

a. Clean part for metallizing per WP 018 00 by vapor degreasing or washing in MIL−PRF−680, type II dry cleaning solvent.

b. Mask off area to be metallized. Grit blast area to be metallized using a coarse aluminum oxide grit. Prevent contamination of prepared surface. Metallize no longer than four hours after grit blasting.

c. Preheat part to 200−300°F (93−149°C). Apply a stream of air to opposite side of part to maintain temperature at 300°F (149°C) maximum while metallizing. Spray bonding material on surface to 0.001 − 0.002 in. thick.

d. Spray coating alloy on surface to a thickness necessary to meet finish requirements. Remove mask in a manner to avoid damage to metal coating. Metallized surface shall adhere to base metal, have a continuous surface and be free of blisters, chips and imperfections.

e. Grind to finish dimensions.

13. Bushing and Sleeve Bearing Replacement.

Materials Required

Specification No./Part No.	Nomenclature
AN150306	Pin
MS9105−03	Pin
678281	Bushing
6816364	Bearing, sleeve

a. Remove old bushing or sleeve bearing per standard shop practices.

b. Press in replacement bushing or sleeve bearing using a suitable press and support blocks. Drill hole in bushing for an AN150306 pin or in sleeve bearing for a MS9105−03 pin. Select pin for a drive fit, stake on side opposite the bushing or sleeve bearing and clean up diameter.

c. Line bore or line ream the bushing or sleeve bearing to finished dimensions indicated. Face bushing or sleeve bearing to finished dimensions indicated.

14. Coordinator Cover Pin Replacement. (figure 9)

Materials Required

Specification No./Part No.	Nomenclature
MS171559	Pin, spring
6851970	Pin, cover

a. Replace cover pin when worn or loose or otherwise damaged as follows:

(1) Remove 0.125 in. diameter pin and press out cover pin from cover (20, figure 1).

(2) Ream cover pinhole for a 0.0005 in. tight fit with replacement cover pin.

(3) Press replacement cover pin in cover to dimensions shown in figure 9.

(4) Drill a 0.156 in. diameter hole through cover and replacement cover pin. Install replacement spring pin, and stake metal over slightly.

(5) Machine exposed end of replacement cover pin to dimensions shown in figure 9.

15. Variable Resistor and Gear Assembly Repair.

Materials Required

Specification No./Part No.	Nomenclature
O−E−760	Alcohol, denatured
MIL−F−14256	Flux, rosin
QQ−S−571, Sn 60	Solder
——	Cord, fused nylon

NOTE

If a wire (7, figure 10) or terminal (9) is broken, or if variable resistor (10) is unserviceable, replace variable resistor assembly (1). Refer to paragraph 16, this WP, for gear transfer to new assembly.

a. Inspect variable resistor and gear assembly as follows:

(1) Receptacle (2 or 4) for damage or deterioration.

(2) Receptacle for broken or damaged pins.

(3) Check receptacle contact spring tension by inserting an appropriate sized socket onto each pin.

(4) Slotted terminals (9) for broken or loose connections.

b. Prior to disassembly of variable resistor assembly, perform linearity test. Refer to paragraph 23, this WP.

c. Disassemble variable resistor assembly as follows:

(1) Cut and remove fused nylon cord (8) as required.

(2) Remove grommet retaining nut (6), if variable resistor assembly has receptacle (4).

(3) Loosen grommet (5) and slide it back on wires (7). Ensure no wires are broken when loosening grommet.

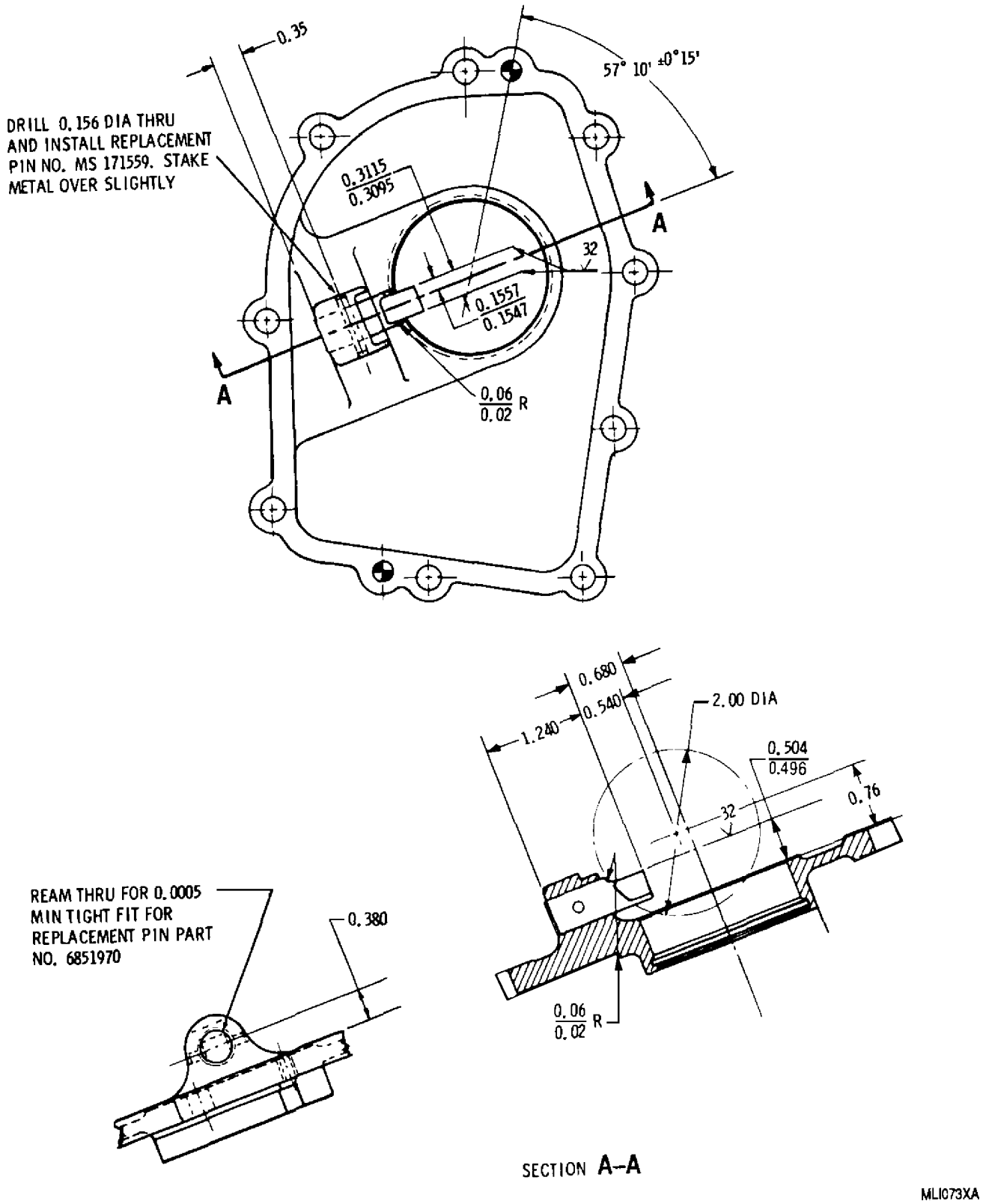

Figure 9. Coordinator Cover Pin Replacement

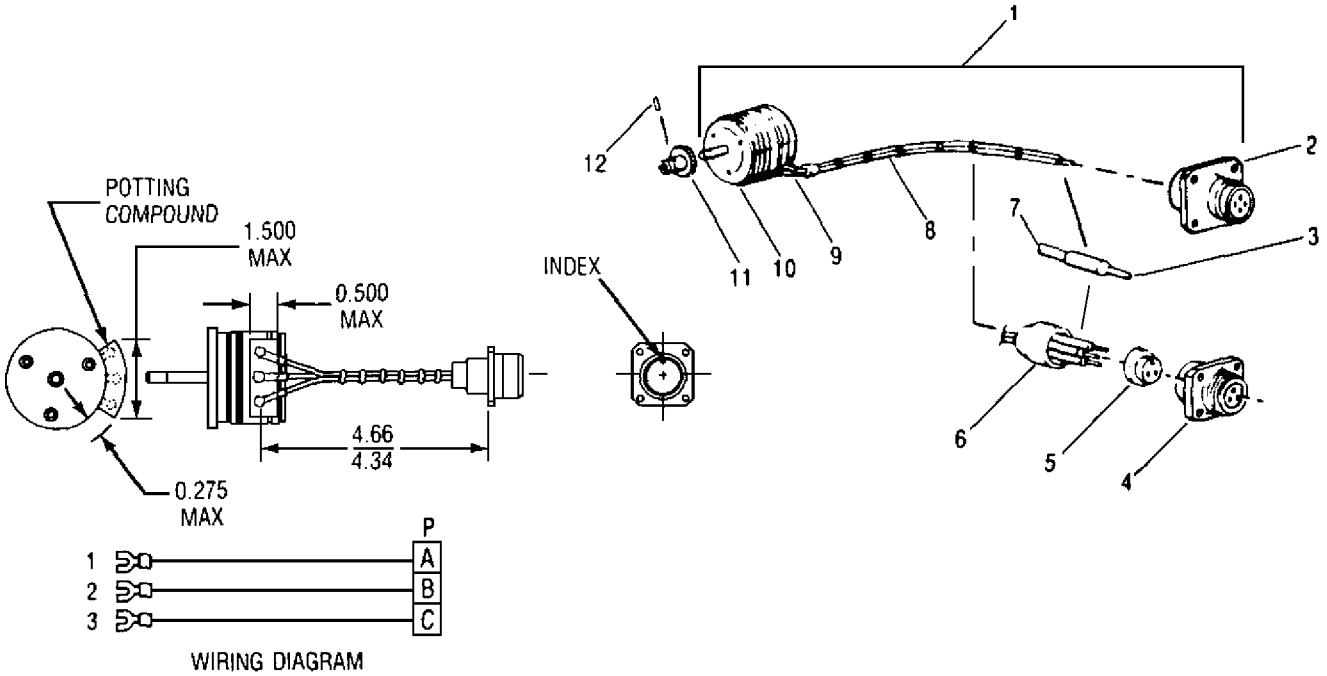

1. Variable Resistor Assembly
2. Receptacle
3. Wire Tip
4. Receptacle
5. Grommet
6. Grommet Retaining Nut
7. Wire
8. Fused Nylon Cord
9. Slotted Terminals (3 places)
10. Variable Resistor
11. Variable Resistor Gear
12. Pin

Figure 10. Variable Resistor and Gear Assembly

(4) Desolder all wires from receptacle.

(5) Remove receptacle and slide grommet off wires.

d. Assemble variable resistor assembly as follows:

(1) If required, replace grommet retaining nut (6). Slide grommet nut over wires.

Denatured Alcohol (Ethanol) O−E−760 **65**

Use QQ−S−571 solder and MIL−F−14256 rosin flux sparingly, as connections may short circuit when grommet is pushed over them. Clean flux from the soldered connections with O−E−760 denatured alcohol.

(2) If required, replace wire tip (3) as follows:

(a) Desolder existing wire tip.

(b) Tin wire sparingly with QQ−S−571, Sn 60 solder and MIL−F−14256 rosin flux.

(c) Install replacement tip and dip tip about 1/16 in. into molten solder.

(3) Thread wires through grommet. Solder wires into receptacle. Use QQ−S−571, Sn 60 solder and MIL−F−14256 rosin flux. All connections shall withstand 15 pounds pull−off tension.

CAUTION

Do not buckle wires when grommet is pushed over them.

(4) Slide grommet over soldered connections.

(5) Tighten grommet retaining nut.

(6) Bundle wires with fused nylon cord (8) at 3/8 in. intervals along entire length if required.

16. Variable Resistor Gear Replacement or Transfer.

Support Equipment Required

Part No./Type Designation	Nomenclature
6171X−PG−AF1	Fixture, assembly, potentiometer (variable resistor) and gear.
6799286 or 6872414 or 6893547	Stand, test, coordinator

Materials Required

Specification No./Part No.	Nomenclature
MS171434	Pin (AR)
MS171464 or MS171494	Pin, oversize (AR)

a. If replacement or transfer of variable resistor gear (11, figure 10) is necessary, use the following procedure.

b. Remove variable resistor gear to be transferred. Use care in removing pin (12).

c. Loosen three adjusting screws (1, figure 11) on 6171X−PG−AF1 fixture.

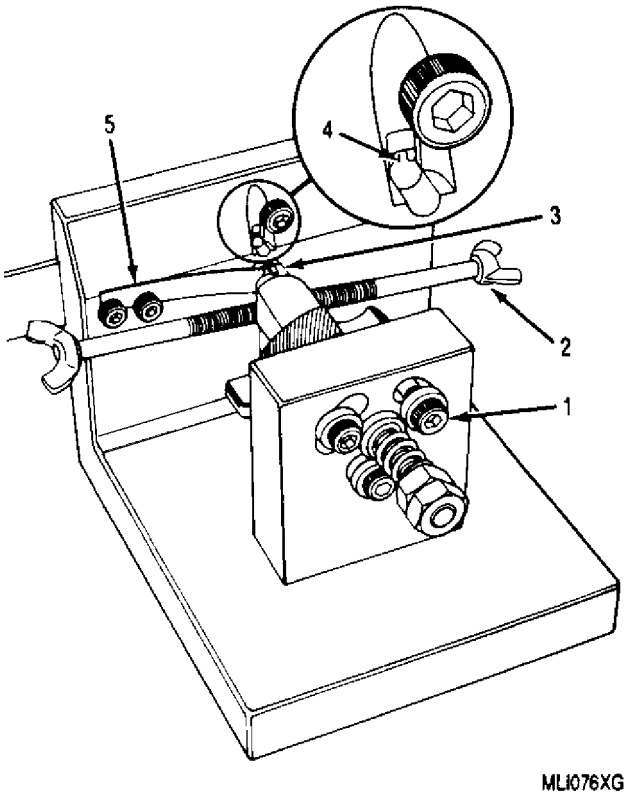

1. Adjusting Screws
2. Wingnut Screws
3. Transverse Pilot Hole
4. Scribe Mark
5. Leaf Spring Assy

Figure 11. 6171X−PG−AF1 Assembly Fixture with Scribed Mark

d. Insert variable resistor gear (1, figure 12), shaft end into bushing (3), as shown in figure 13, so that scribe mark (4, figure 11) on one tooth on leading side of gear is visible when viewed through port hole. Proper gear teeth shall straddle locating pin (2, figure 12 and 1, figure 13) to accomplish this.

e. Variable resistor gear shall be held in this position against leaf spring (5, figure 11) tension when dovetail spacer (4, figure 12) is inserted into dovetail groove as shown in figure 13. Dovetail spacer will prevent leaf spring assembly from forcing variable resistor gear out of bushing which might permit locating pin (2, figure 12) to become improperly aligned and located between the wrong gear teeth. Dovetail spacer is provided to establish proper dimension between variable resistor housing and trailing end of variable resistor gear.

f. Insert 1/4 in. dowel pin through variable resistor gear into cavity of receiver (5, figure 12). This aligns receiver with hole in variable resistor gear.

g. With axis of variable resistor shaft horizontal, rotate whole variable resistor assembly on this axis until

the position of three terminals of variable resistor housing upward (12 o'clock position).

h. Manually (by touch) set wiper on variable resistor by turning variable resistor shaft counterclockwise, to constant resistance band at maximum resistance end of variable resistor range, rotation being determined by facing shaft end of variable resistor assembly.

i. Carefully install variable resistor shaft through variable resistor gear into receiver (5, figure 12). Position scribe mark on variable resistor gear between terminal posts 2 and 3 (12° from post 3, figure 14). (Do not disturb wiper setting or 12 o'clock position of terminals.)

j. Secure variable resistor housing to front block (6, figure 12) by tightening retaining screws (7) into mounting holes in variable resistor housing.

k. Tighten wing nut screws (2, figure 11) onto variable resistor shaft.

l. Variable resistor shaft may now be adjusted independently of variable resistor housing and variable resistor gear.

m. Lock receiver (5, figure 12) in position by tightening three adjusting screws (1, figure 11). At this point variable resistor housing, shaft, and gear are locked in required position and cannot move.

CAUTION

Do not move or bend variable resistor shaft.

Do not apply pressure to support screw or location and alignment of variable resistor gear and shaft will be changed.

n. Tighten support screw (1, figure 15) with finger pressure only, so that supporting cap (1, figure 16) gently contacts variable resistor gear and serves as a support.

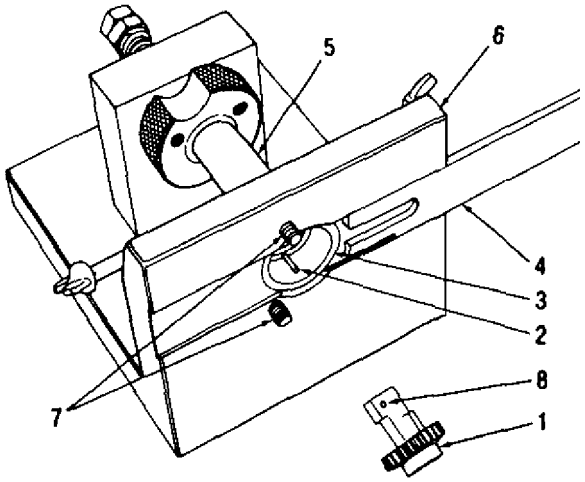

1.	Variable Resistor Gear	5.	Receiver
2.	Locating Pin	6.	Front Block
3.	Bushing	7.	Retaining Screws
4.	Dovetail Spacer	8.	Transverse Pilot Hole

Figure 12. 6171X−PG−AF1 Assembly Fixture with Variable Resistor Gear

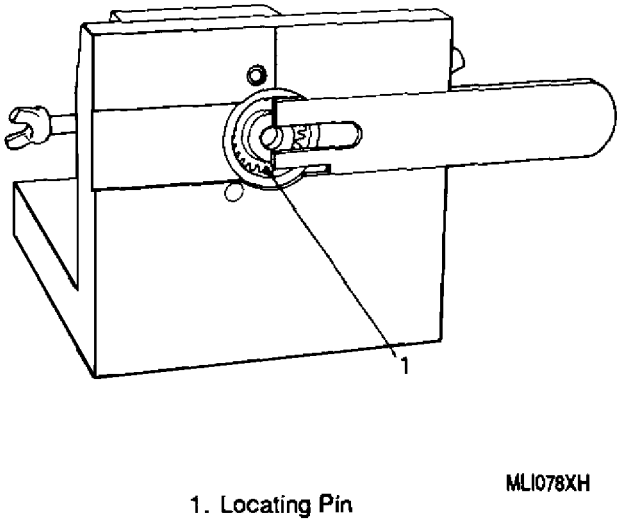

Figure 13. 6171X−PG−AF1 Assembly Fixture with Locating Pin

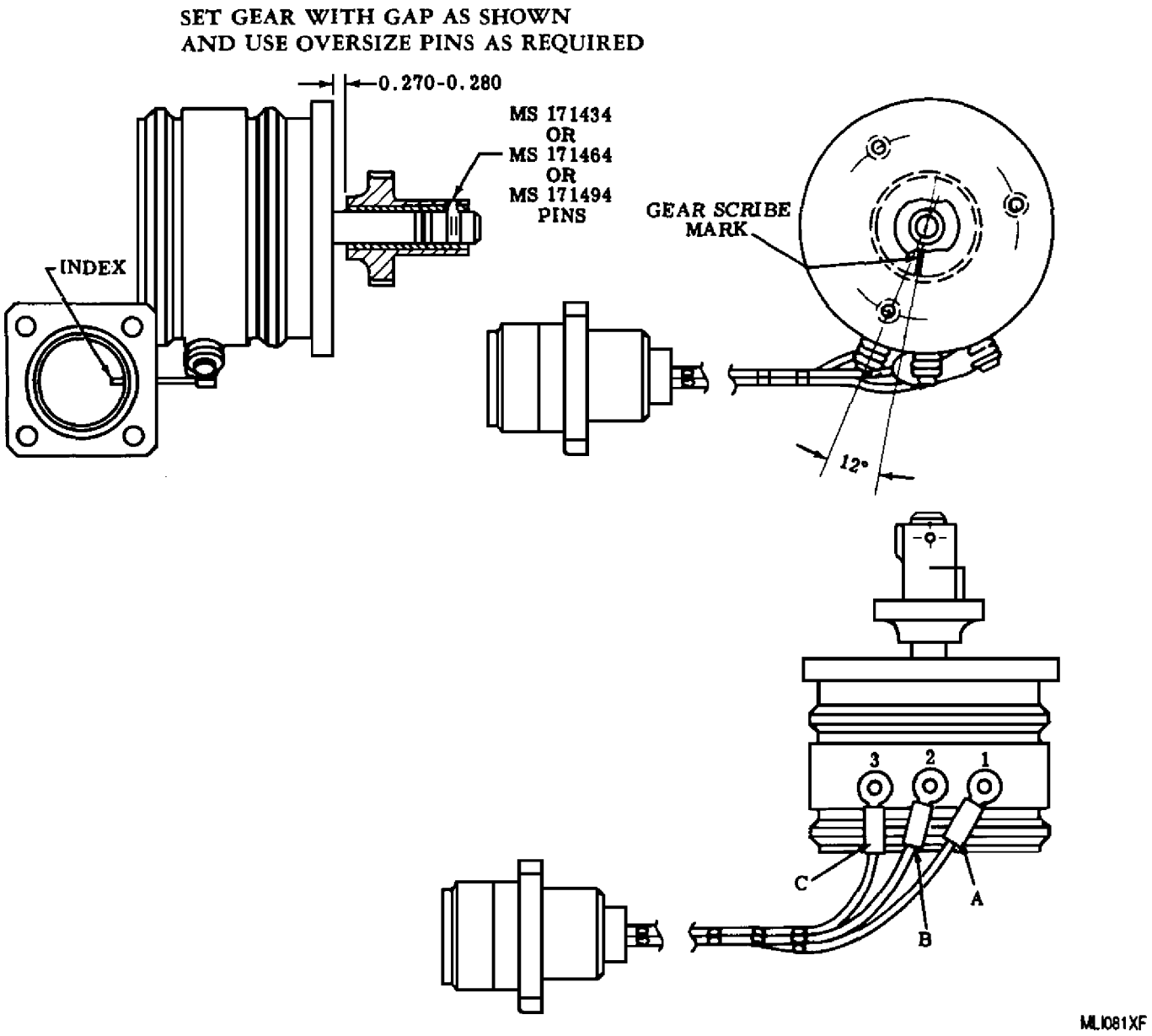

Figure 14. Installation of Gear on Variable Resistor Assembly

o. Before pinning variable resistor to variable resistor gear, check variable resistor resistance as follows, using 6799286, 6872414, or 6893547 test stand.

NOTE

The following detail dash numbers correspond to the identifiers located in the test stand operation manuals.

(1) (6872414 test stand) Connect adapter cable (−600) between digital ohmmeter input connector (−28) and J11 connector (−322) on control panel.

(2) (6799286 test stand) Connect adapter cable (−600) between digital ohmmeter input connector (−1D) and J1 connector (−322) on control panel.

(3) (6893547 test stand) Connect adapter cable (−600) between multimeter input connector (−1F) and J11 connector (−322) on control panel. Connect RED plugs to the HI jacks and the BLACK plugs to the LO jacks on multimeter.

(4) Turn on MASTER POWER switch (−332). ON lamp (−328) lights.

(5) (6799286 test stand)Turn on POWER UNIT switch (−2E). INDICATOR lamp (−2D) lights.

(6) (6872414 and 6893547 test stand) Push the POWER switch (−1A). (6872414 switch lamp lights.)

(7) Set PIN SELECTOR switch No. 1 (−316A) at A* and PIN SELECTOR switch No. 2 (−316B) at B*.

(8) Attach retractable cable (−309) to variable resistor.

(9) Rotate variable resistor shaft (receiver of fixture (5, figure 12)) counterclockwise (viewed from shaft end of variable resistor) until 990 − 1010 ohms is indicated on digital ohmmeter or multimeter.

(10) Slowly rotate variable resistor shaft clockwise to exact point at which 990 − 1010 ohms reading begins to decrease. This is electrical end point below which resistance decreases and above which it remains constant.

p. The partially drilled transverse pilot hole (8, figure 12) in variable resistor gear shaft should now be located vertically with opening on top of variable resistor gear shaft (3, figure 11).

q. Using partially drilled hole in variable resistor gear shaft as a pilot, drill and ream through variable resistor gear shaft and variable resistor shaft. (Be sure gear is set within limits in figure 14).

r. Drill 0.062 − 0.065 in. diameter hole.

s. If MS171469 oversize pin is used, drill 0.078 − 0.081 in. diameter hole or if MS171494 pin is necessary, drill 0.094 − 0.097 in. diameter hole through shaft and gear.

t. Inspect drilled hole for any existing burrs. Remove burrs if present.

u. Use a MS171464 or MS171494 oversize pin to retain an old gear to a new variable resistor to eliminate possibility of a loose fit.

CAUTION

Do not move variable resistor housing or gear, or bend shaft.

v. Install pin with 25 − 30 pounds force, using an arbor press.

w. (6799286 test stand) After pinning, turnoff power switches (−332 and −2E), remove retractable cable (−309) and adapter cable (−600). Set PIN SELECTOR switches at OFF.

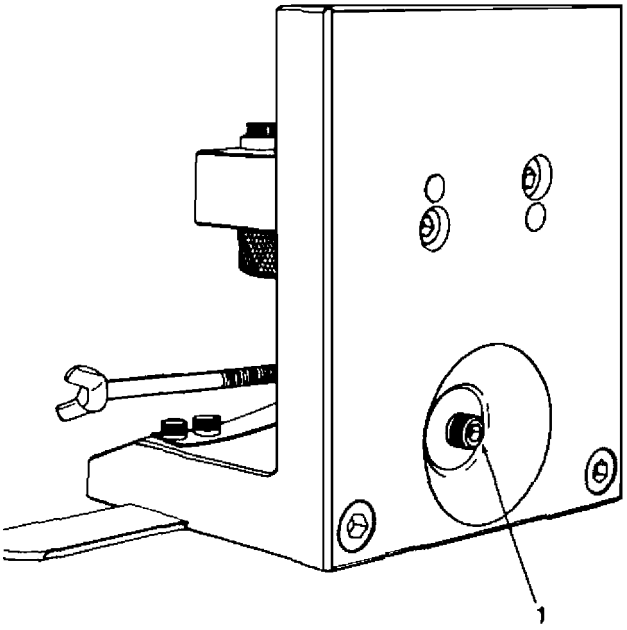

1.Supporting Screw

Figure 15. 6171X−PG−AF1 Assembly Fixture with Support Screw

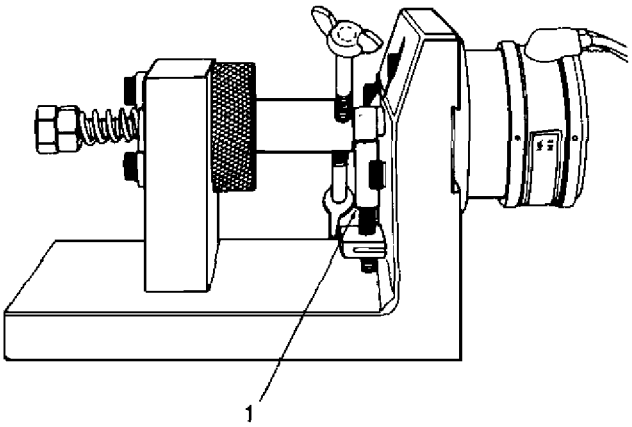

1.Supporting Cap

Figure 16. 6171X−PG−AF1 Assembly Fixture with Support Cap

x. (6872414 and 6893547 test stand) After pinning, turn off power switches (−332 and −1A), remove retractable cable (−309) and adapter cable (−600). Set PIN SELECTOR switches at OFF.

y. Remove variable resistor and gear assembly from fixture.

17. COORDINATOR CONTROL ASSEMBLY − LUBRICATION.

Materials Required

Specification No./Part No.	Nomenclature
MIL−PRF−81322	Grease

General Purpose Aircraft Grease MIL−PRF−81322 **37**

a. Use MIL−PRF−81322 grease for all assembly lubrication.

b. Lightly coat all contact surfaces of mating parts where there is relative movement.

c. Pack inner recessed portions between coordinator main shaft and gear assembly (43, figure 1), feathering shaft assembly (40), and propeller coordinator shaft assembly (37).

d. Pack all bearings except prepacked or fully shielded bearings.

18. COORDINATOR CONTROL ASSEMBLY − ASSEMBLY.

Support Equipment Required

Part No./Type Designation	Nomenclature
6799286 or 6872414 or 6893547	Stand, test, coordinator
6799205	Fixture, adjusting, coordinator potentiometer (variable resistor)
6799335	Fixture, coordinator positioning
——	Indicator, Dial
——	Wrench, torque (0−100 lb in.)

Materials Required

Specification No./Part No.	Nomenclature
Krylon No. 1303	Sealer, spray
MIL−S−8660	Compound, silicone
MS20995C20	Lockwire
MS20995C32	Lockwire
PL32M Hylomar	Sealing compound
——	Prussian Blue

NOTE

Refer to figure 17 for fits and clearance limits.

a. Assemble coordinator control using figure 1 and the following procedures as a guide.

b. Install washers (30 and 31) and bearing (32) in housing (62).

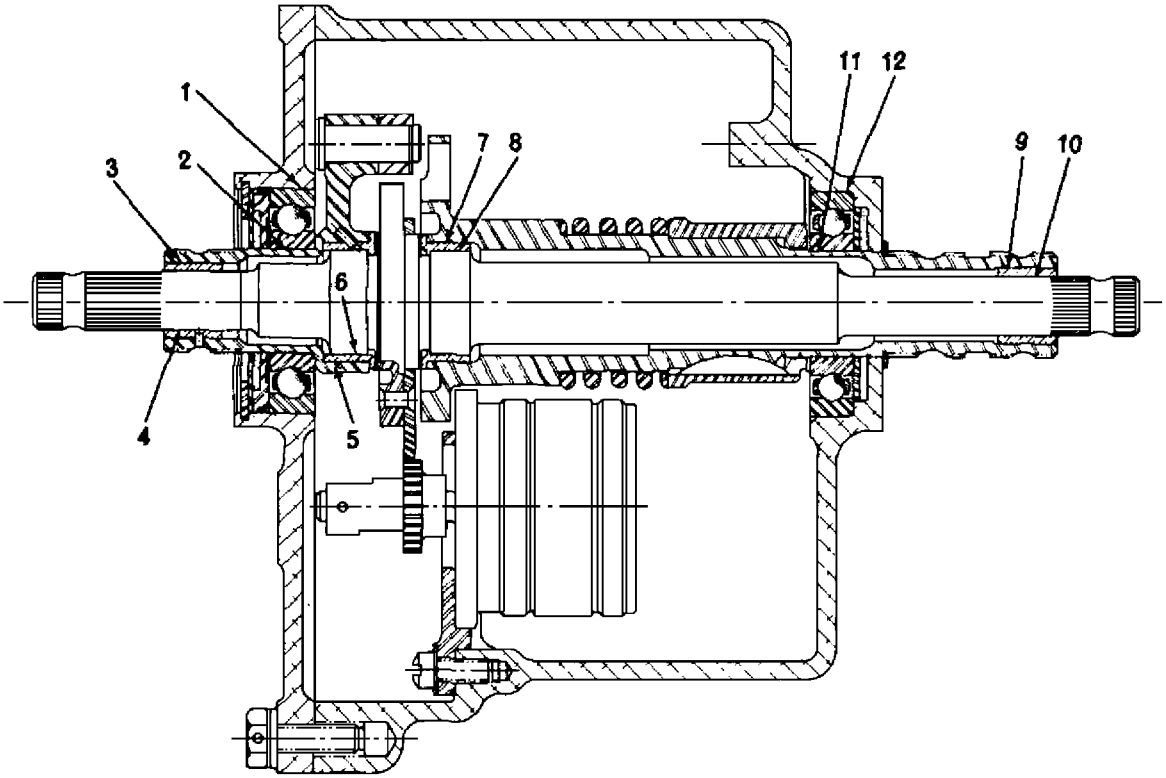

MLI082XD

NOTE

- The letters “L” and “T” in the values columns indicate a “Loose” or “Tight” fit. Replace or rework parts if wear exceeds the permissible limits under the *Maximum* column.
- The limits specified, for circumferential fits between ID and OD of two parts, are based on the difference between machined, true circle, diameters on the two parts. Therefore, when inspecting and measureing used parts to determine assembly fit condition, an average diameter must be established if an out−of−round condition exists.

Ref. No.	Description	Minimum	Maximum
1	Bearing−Cover	0.0001T	0.0008L
2	Bearing−Shaft	0.0001L	0.0005L
3	Bushing (Front)−Propeller Coordinator Shaft	0.0030T	0.0010T
4	Bushing (Front)−Coordinator Main Shaft and Gear	0.0010L	0.0040L
5	Sleeve Bearing (Rear)−Propeller Coordinator Shaft	0.0030T	0.0010T
6	Sleeve Bearing (Rear)−Coordinator Main Shaft and Gear	0.0005L	0.0035L
7	Sleeve Bearing (Front)−Coordinator Feathering Shaft	0.0030T	0.0010T
8	Sleeve Bearing (Front)−Coordinator Main Shaft and Gear	0.0005L	0.0035L
9	Bushing (Rear)−Coordinator Feathering Shaft	0.0030T	0.0010T
10	Bushing (Rear)−Coordinator Main Shaft and Gear	0.0010L	0.0040L
11	Bearing−Coordinator Feathering Shaft	0.0001T	0.0004L
12	Bearing−Coordinator Housing	0.0001T	0.0008L

Figure 17. Coordinator Control Assembly Fit Limits

c. Install feather shaft stop (59), washer (61) and self locking nut (60). Torque nut to 74 − 89 lb in. (QA)

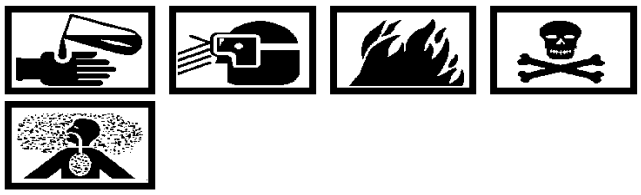

Sealing Compound PL32M Hylomar 40

d. Apply a thin coating of PL32M sealing compound to mating surface of plate (56) and mounting surface on coordinator housing.

e. Install plate, washers (53) and screws (52). Torque screws to 12 − 15 lb in. Lockwire (MS20995C20) screws. (QA)

Sealing Compound PL32M Hylomar 40

f. Apply a thin coating of PL32M sealing compound to rear mating surface of plate (56) and electrical connector mounting surface of variable resistor and gear assembly (58).

g. Install variable resistor and gear assembly on inside of coordinator housing. Secure connector with retainer plate (57) screws (54) and washers (55). Torque screws to 8 − 10 lb in. Lockwire (MS20995C20) screws. (QA)

h. Install potentiometer adapter (47) on variable resistor and gear assembly with screws (48) and washers (49). Finger tighten screws.

i. Install potentiometer adapter, screws (49) and washers (51). Torque screws to 22 − 26 lb in. Lockwire (MS20995C20) screws. (QA)

j. Lubricate preassembled discriminator assembly (29) per paragraph 17, this WP.

k. Install feather control cam (34) on discriminator assembly. Do not install spring (36) at this time.

l. Check end play of discriminator assembly as follows:

(1) Clamp coordinator housing (62) firmly to 6799335 fixture (figure 18).

(2) Manually push discriminator assembly into housing as far as possible. Match scribe mark on variable resistor gear tooth with scribe mark on tooth space of drive gear on main shaft and gear assembly (43, figure 1).

(3) Position a dial indicator against end of main (center) shaft at end which was manually pushed in.

(4) Zero the dial.

(5) Carefully push main shaft and gear assembly of discriminator assembly to opposite maximum position (towards dial indicator).

(6) End play should be 0.004 − 0.012 in.

(7) If end play is not within limits, disassemble and install selected thickness of shim (33) as necessary.

(8) If end play is within limits, install spring (36).

m. Check feather control cam (34) engagement against stop (59) as follows:

NOTE

Only a very light coating of Prussian Blue is desirable, or resulting imprint on feather control cam will not be satisfactory.

(1) After acceptable end play is obtained, apply a thin coating of Prussian Blue to stop.

(2) Insert discriminator assembly (29), key (35), and shim (33) in housing. Rotate cam until each lobe on feather control cam contacts stop.

(3) Remove discriminator assembly, feather control cam, and key. Observe blue contact transfer on feather control cam lobes. Distance from point of contact to end of lobe should not be less than 0.030 in.

n. Adjust variable resistor with the following procedure:

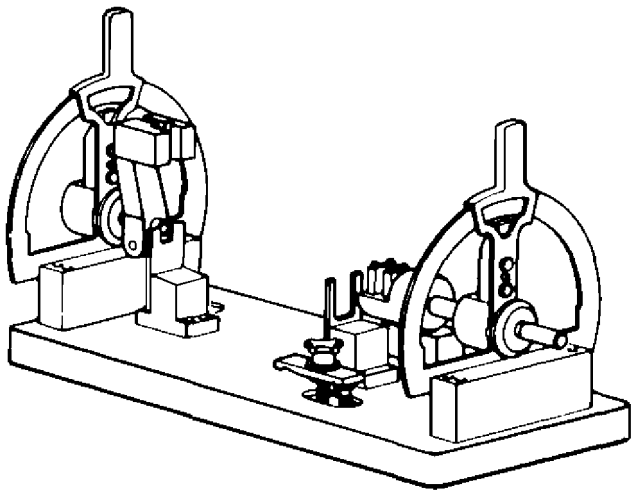

Figure 18. 6799335 Coordinator Positioning Fixture

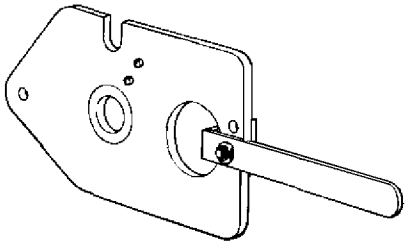

Figure 19. 6799205 Coordinator Variable Resistor Adjusting Fixture

(1) Loosen screws (48) securing variable resistor and gear assembly to adapter (47). Leave screws finger tight.

(2) Make certain that scribe marks on main shaft and gear assembly (43) and on variable resistor gear (63) are aligned.

(3) Install 6799205 fixture (figure 19) on housing (62) in place of cover.

NOTE

The following detail dash numbers correspond to the identifiers located in the test stand operation manuals.

(4) (6799286 test stand) Connect adapter cable (−600) from digital ohmmeter to J1 connector (−322) on control panel.

(5) (6872414 test stand) Connect adapter cable (−600) from digital ohmmeter to J11 connector (−322) on control panel.

(6) (6893547 test stand) Connect adapter cable (−600) between multimeter (−1) and J11 connector (−322) on control panel. Connect RED plugs to HI jacks and BLACK plugs to LO jacks on multimeter (−1).

(7) Attach retractable cable (−309) to electrical connector of variable resistor and gear assembly (58, figure 1).

(8) Turn on MASTER POWER switch (−332). ON lamp (−326) lights.

(9) (6799286 test stand) Turn on POWER UNIT switch (−2E). INDICATOR lamp (−2D) lights.

(10) (6872414 and 6893547 test stand) Push the POWER switch (−1A). (6872414 switch lamp lights.)

(11) (6872414 test stand) Select 1 RANGE pushbutton switch (−1C) and KΩ FUNCTION pushbutton switch (−1E).

(12) (6893547 test stand) Select the 4 WIRE Ω pushbutton switch (−1D) and the AUTO/MAN pushbutton switch (−1C) in the auto range. The display will show 4Ω MAN RING in the manual range and 4Ω in the auto range.

NOTE

Asterisk indicates pins in small electrical connectors.

(13) Set PIN SELECTOR switch No. 1 (−316A) on A* and PIN SELECTOR switch No. 2 (−316B) on B*.

(14) Use fixture wrench to adjust, as required, variable resistor to a value of 990 − 1010 ohms.

(15) Torque visible variable resistor screw (50) to 22 − 26 lb in. Check ohmmeter reading to ensure variable resistor is within the 990 − 1010 ohms limits. (QA)

(16) Remove 6799205 fixture. Torque remaining two screws (50) to 22 − 26 lb in. Lockwire (MS20995C032) screws. (QA)

(17) (6799286 test stand) Turn off power switches (−332 and −2E), remove adapter cable (−600) and retractable cable (−309) and return both PIN SELECTOR switches to OFF.

(18) (6872414 and 6893547 test stand) Turn off power switches (−332 and −1A), remove adapter cable (−600) and retractable cable (−309) and return both PIN SELECTOR switches to OFF.

o. Install retaining ring (28).

p. Install bearing (23) in cover assembly (20).

Sealing Compound PL32M Hylomar 40

q. Apply a thin coating of PL32M sealing compound to mating surface of cover assembly and coordinator housing.

r. Install cover assembly, bolts (21) and washers (22). Torque bolts to 70 − 85 lb in. Lockwire (MS20995C032) bolts. (QA)

s. Install preformed packing (24), washers (25, 26 and 27) and retaining ring (19).

t. Install protractor (16), screws (17) and washers (18). Torque screws to 12 − 15 lb in. (QA)

u. If removed, install data plate (13), screws (14) and washers (15). Torque screws to 5 − 8 lb in. Lockwire (MS20995C020) screws. (QA)

19. Lever Installation.

Support Equipment Required

Part No./Type Designation	Nomenclature
6799330	Bushing, coordinator shaft adapter
6799331	Adapter, coordinator shaft
——	Wrench, torque (0−100 lb in)

Materials Required

Specification No./Part No.	Nomenclature
MS20995C20	Lockwire
MS20995C32	Lockwire
Krylon No. 1303	Sealer, spray

CAUTION

Do not overtorque nut (11, figure 1) or binding of inner and outer shafts might occur and cause propeller setting arm (10) to move to takeoff when condition arm (4) is moved to feather.

a. Install propeller setting arm (10) on propeller (power lever) shaft assembly (37) with scribe marks on lever and shaft aligned (figure 20). Torque locknut to 60 − 65 lb in. Loosen, then re−torque to 45 − 50 lb in. and lockwire. (QA)

b. Rotate main shaft and gear assembly (43, figure 1) against 90° stop. Install pointer (7), at 90° position, cap (9) and screws (8). Clearance between pointer and protractor shall be 1/32 in. minimum. Also leave clearance between pointer and coordinator shaft (figure 21). Torque screws to 10 − 15 lb in. Lockwire (MS20995C20) screws. (QA)

c. Rotate coordinator main (inner) shaft and gear assembly (43, figure 1) to full counterclockwise position (against 90° MILITARY stop (59)) in coordinator. Rotate feathering (outer) shaft assembly (40) to full clockwise (UN−FEATHER) position.

d. With feathering shaft in maximum clockwise position, install condition arm (4) (offset out) on shaft (figure 22). Align scribe marks on lever with a blind spline on shaft.

CAUTION

Do not overtorque condition arm and fuel cutoff lever nuts (2 and 5, figure 1) or binding of the inner and outer shafts might occur causing the engine to feather.

e. Install bolt and nut. Torque nut to 60 − 65 lb in. Loosen, then re−torque to 45 − 50 lb in. and lockwire. (figure 23). (QA)

f. Install fuel cutoff output lever (1, figure 1) (offset out) on feathering shaft, aligning blind splines (figure 24).

g. Install bolt (3, figure 1) and nut (2). Torque nut to 60 − 65 lb in. Loosen, then re−torque to 45 − 50 lb in. and lockwire nut (figure 23). (QA)

CAUTION

Keep housing drain holes clean.

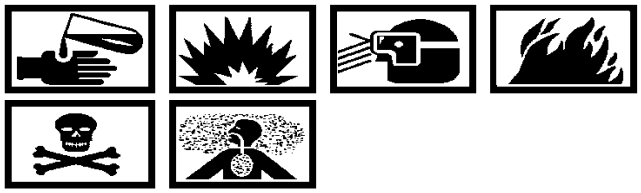

Lacquer Krylon No. 1303 **48**

h. Spray all external bolts, nuts, and screws with Krylon No. 1303 sealer or approved equivalent.

i. Allow thirty minutes drying time at room temperature.

j. Using adapters 6799330 and 6799331 (figure 25) check the following:

(1) Torque required to move condition lever shaft throughout its entire range shall be measured and shall not exceed 5 lb in. (QA)

(2) Torque required to hold main coordinator shaft in zero position while moving condition lever throughout its entire range of travel shall not exceed 3.5 lb in. (QA)

(3) Torque required to move main coordinator shaft shall not exceed 3 lb in. except in 60 − 70° travel range where torque shall not exceed 5 lb in. (QA)

(4) Hold condition arm (4) in unfeathered position during this check.

(5) Torque measurements per steps (1) through (4) shall be made with condition arm, fuel cutoff output lever, and propeller setting arm installed with clamping bolts and nuts torqued to 60 − 65 lb in. Following this initial check, loosen clamping nuts and torque to 45 − 50 lb in. Repeat torque measurements of steps (1) through (4). Lockwire (MS20995C032) nuts (figure 23). (QA)

k. Test coordinator control assembly per paragraph 20, this WP.

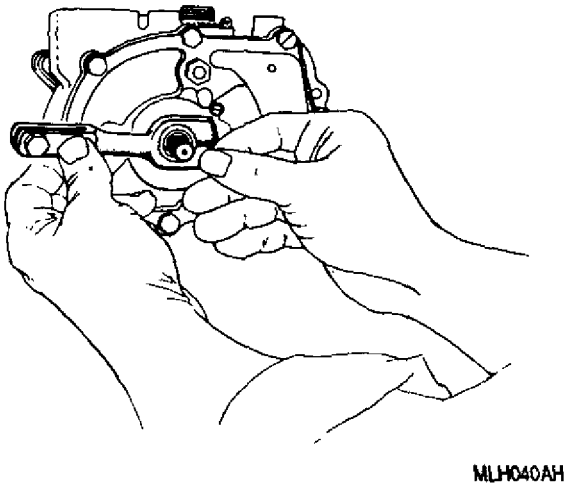

Figure 20. Installing Propeller Setting Arm

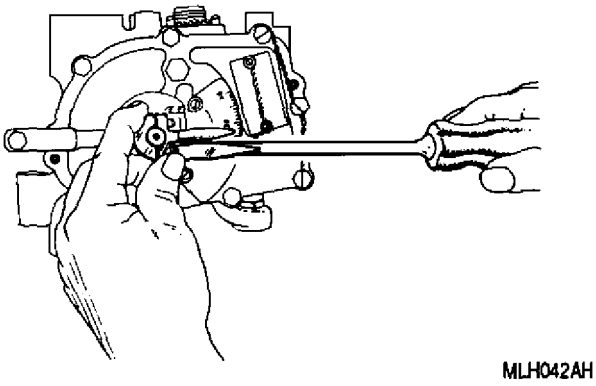

Figure 21. Installing Coordinator Pointer

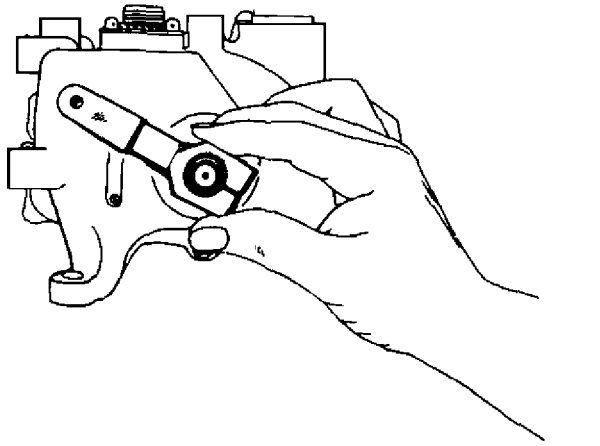

Figure 22. Installing Condition Arm

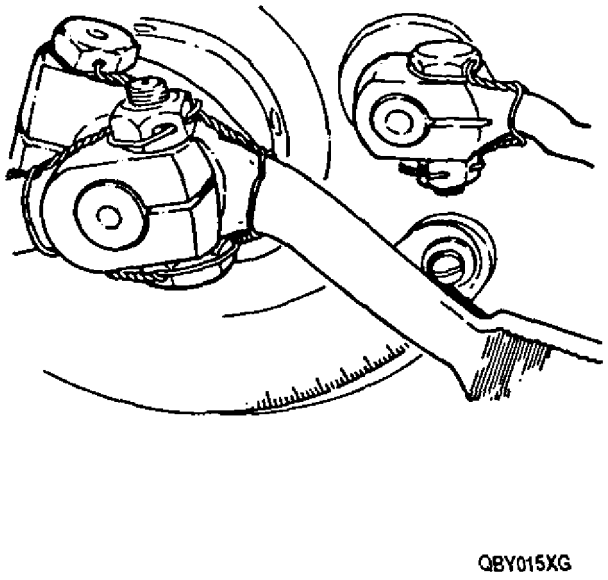

Figure 23. Lever Lockwire Details

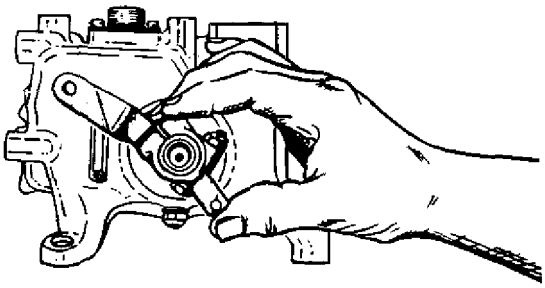

Figure 24. Installing Fuel Cutoff Output Lever

20. COORDINATOR CONTROL ASSEMBLY − TESTING.

21. Coordinator Control Testing Using 6799286 Test Stand.

Support Equipment Required

Part No./Type Designation	Nomenclature
6799286	Stand, test, coordinator
6799328	Fixture, coordinator holding
6799335	Fixture, positioning, coordinator

a. Install coordinator control assembly in 6799335 positioning fixture (figure 18) and using 6799286 test stand (figure 26), test as follows:

NOTE

The following detail dash numbers correspond to the identifiers located in the test stand operation manuals.

(1) Insert plug (−800) in test stand J1 connector (−322).

(2) Attach control panel retractable cables to coordinator.

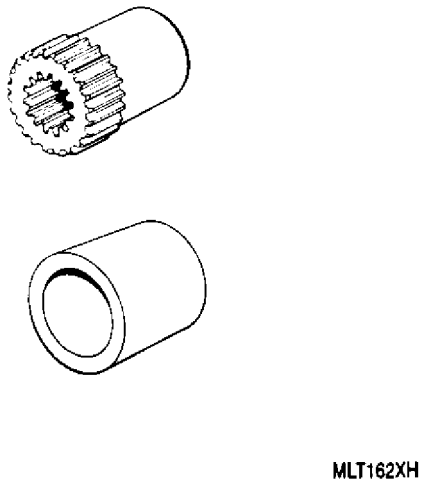

Figure 25. 6799330 Coordinator Shaft Adapter Bushing and 6799331 Coordinator Shaft Adapter

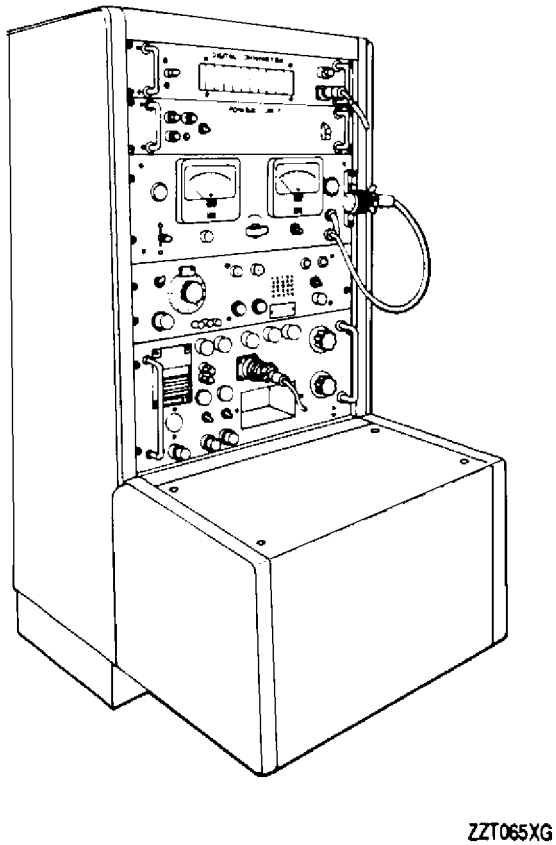

Figure 26. 6799286 Coordinator Test Stand

(3) Turn on MASTER POWER switch (−332). ON lamp (−328) lights.

(4) Turn on PANEL POWER switch (−338). ON lamp (−323) lights.

(5) Advance power lever from 0 − 90°. Total travel of shaft shall be 89.9 − 90.4°.

(6) Rotate feathering shaft from full unfeather to full feather and check operation of control lever shaft. Total travel of shaft shall be 118.6 − 119.6°.

(7) With coordinator main shaft and gear assembly shaft at its 90° position, advance condition arm shaft against its full feather stop in coordinator. With coordinator feathering shaft held at full feather position, coordinator main shaft shall be capable of being rotated to its 0° position.

(8) With main shaft and gear assembly shaft at its 0° position, advance condition arm from 0 − 119°. Total travel of propeller actuating lever shall be 106 − 108°.

(9) Turn PANEL POWER switch (−338) to OFF, ON lamp (−323) goes out. Remove plug (−800) from control panel J1 connector (−322).

(10) Connect adapter cable (−600) between digital ohmmeter input connector (−1D) and J1 connector (−322) on control panel.

(11) Turn on POWER UNIT switch (−2E). INDICATOR lamp (−20) lights.

NOTE

Asterisk indicates pins in small electrical connectors.

(12) Set PIN SELECTOR switch No.1 (−316A) at A* and PIN SELECTION switch No. 2 (−316B) at B*. Check circuit A* to B* on digital ohmmeter for values in table 1.

CAUTION

Open the windings of variable resistor to prevent burning. Do not attempt to measure resistances of less than 40 ohms.

NOTE

Approach feathering shaft positions from a lower angle to obtain readings.

(13) Set PIN SELECTOR switch No. 1 (−316A) at A* and PIN SELECTOR switch No. 2 (−316B) at C*. Circuit A* to C* shall have a resistance of 990 − 1010 ohms at all condition arm positions.

(14) Turn off POWER UNIT switch (−2E). INDICATOR lamp (−2D) goes out. Remove adapter cable (−600) from digital ohmmeter and J1 connector. Set PIN SELECTOR switches at OFF.

(15) Attach insulation tester cable (−11) to control panel J1 connector (−322).

(16) Set voltage control (−3E) in the extreme counterclockwise position (zero volts).

(17) Be sure PIN SELECTOR switch No. 1 (−316A) and PIN SELECTOR switch No. 2 (−316B) are set at OFF.

Table 1. Ohmmeter Values for Condition Arm Positions

Condition Arm	Ohmmeter Readout Position (ohms)
45°	43−80
50°	Linear ± 10
60°	Linear ± 10
70°	Linear ± 10
80°	Linear ± 10
90° STOP	Equal to resistance A* to C* (with feathering shaft at approximately 15°) minus one to seven ohms. Condition arm shall be moved slowly until stop is contacted to obtain this 90° reading.

WARNING

Do not attempt to connect or disconnect any item under test while instrument high voltage is energized.

(18) Turn on insulation tester POWER switch (−3G). POWER ON lamp (−3H) lights.

(19) Turn on H. V. switch (−3B) and rotate voltage control (−3E) until 500 volts is indicated on voltmeter (−3C). Return H.V. switch (3B) to OFF (center) position.

CAUTION

Do not set PIN SELECTOR switch No. 1 and PIN SELECTOR switch No. 2 on same letter when high voltage is on; to avoid this, always release spring−return H.V. switch to OFF (center position) before moving PIN SELECTOR switches.

(20) Check leakage between pins listed in table 2 when spring−loaded H.V. switch (−3B) is held down. H.V. ON lamp (−3A) lights. Replace part if microammeter indicates a maximum of 250 microamps leakage.

Table 2. Pin Selectors

No. 1	No. 2	No. 1	No. 2
E	A	D	A*
E	D (power lever above 70°)	GND	D
GND	E	GND	A*
		GND	B*

(21) At the termination of test:

(a) Turn off power switches (−332 and −3G).

(b) Remove retractable cables (−309 and −310) from coordinator.

(c) Remove attached cable (−11) from J1 connector (−322).

(d) Rotate voltage control (−3E) to zero volts position (extreme counterclockwise).

(e) Set the PIN SELECTOR switches No. 1 and No. 2 (−316A and −316B) at OFF.

b. Perform an equivalent noise resistance test as follows:

(1) Place the foot switch (−414) in a convenient location.

(2) Attach the adapter cable (−500) from the ponogometer connector (−406) to the ponogometer standard cable (−700).

WARNING

Ponogometer operates on 250 volts; never handle leads while foot switch (−414) is depressed.

(3) Connect ponogometer standard cable (−700) to three jacks on ponogometer panel (red to red and black to black).

(4) Turn on MASTER POWER switch (−332). ON lamp (−328) lights.

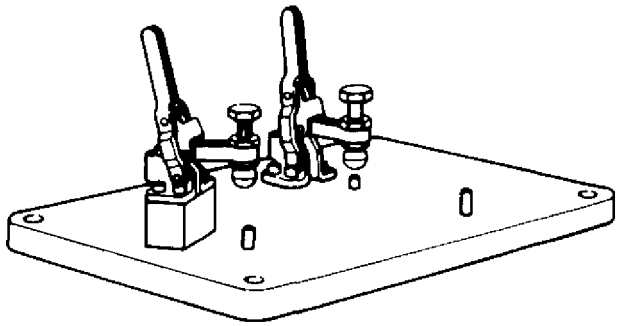

Figure 27. 6799328 Coordinator Holding Fixture

(5) Turn on ponogometer power switch (−412). STAND−BY lamp (−411) lights.

(6) Set equivalent noise resistance ENR selectors (−401 and −403) at 100 ohms.

(a) Set switch (−401) at 0−1K.

(b) Rotate selector (−403) to 100.

(7) Depress foot switch (−414) and rotate switch (−402) back and forth until a beep and OPEN lamp (−405) signal are given. If it is necessary to move selector (−403) off of 100 ± 5 ohms to obtain beep and OPEN lamp (−405) indicating a ponogometer threshold, adjustment should be made by qualified technician.

(8) Release foot switch and remove ponogometer standard cable (−700) from ponogometer panel and adapter cable (−500).

(9) Install test coordinator in 6799328 holding fixture (figure 27) and connect adapter cable (−500).

(10) Depress foot switch (−414) and rotate power lever (test variable resistor) from 30 − 90° in a 1 − 2 second movement. OPERATE (−410) and NORMAL (−407) lamps light if operation is satisfactory. Variable resistor is not acceptable if OPEN lamp (−405) lights in place of NORMAL lamp (−407) and an audible signal is given and is repeatable. Audible and OPEN signals last approximately 1 − 1.5 seconds.

(11) At termination of test, turn off power switches (−332 and −412) and remove adapter cable (−500).

22. Coordinator Control Testing Using 6872414 or 6893547 Test Stand.

Support Equipment Required

Part No./Type Designation	Nomenclature
6799328	Fixture, coordinator holding
6799335	Fixture, positioning, coordinator
6872414 or 6893547	Stand, test, coordinator

a. Remove the output lever and condition arm and install the coordinator control assembly in the 6799335 positioning fixture (figure 18). Using the 6872414 or 6893547 test stand (figure 28 or 29) check the coordinator control assembly for open circuits, linearity, and insulation leakage as follows:

NOTE

The following detail dash numbers correspond to the identifiers located in the test stand operation manuals.

(1) Insert the plug (−700) in the test stand J11 connector (−322).

(2) Attach control panel retractable cable (−309) to coordinator.

(3) Turn on MASTER POWER switch (−332). ON lamp (−328) lights.

(4) Turn on PANEL POWER switch (−338). ON lamp (−323) lights.

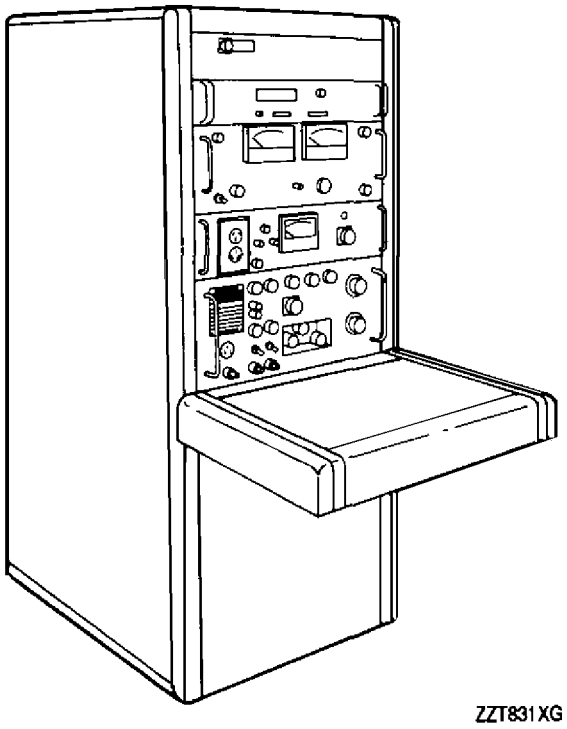

Figure 28. 6872414 Coordinator Test Stand

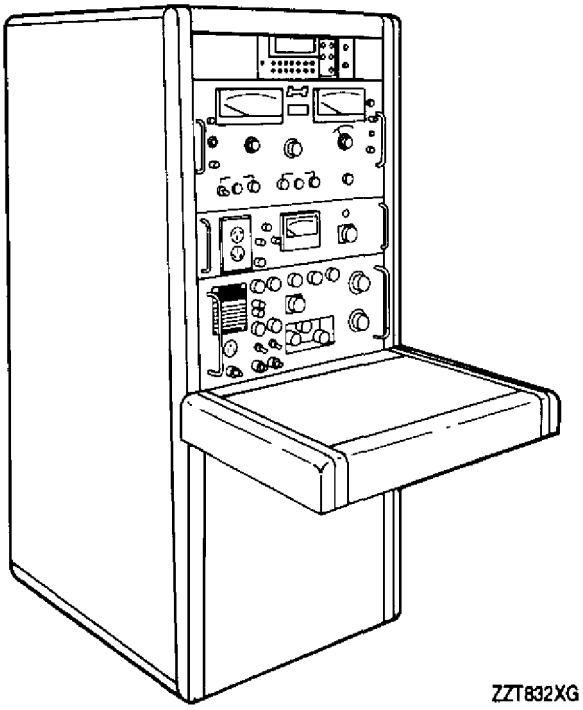

Figure 29. 6893547 Coordinator Test Stand

(5) When advancing power lever from 0 − 90°, total travel of shaft shall be 89.9 − 90.4°.

(6) Rotate feathering shaft from full unfeather to full feather and check operation of control lever shaft. Total travel of shaft shall be 118.6 − 119.6°.

(7) With main shaft and gear assembly shaft at its 90° position, advance condition arm shaft against its full feather stop in coordinator. With feathering shaft held at full feather position, main shaft shall be capable of being rotated to its 0° position.

(8) With main shaft and gear assembly shaft at its 0° position, advance condition arm from 0 − 119°. Total travel of propeller actuating lever shall be 106 − 108°.

(9) Turn PANEL POWER switch (−338) to OFF, ON lamp (−323) goes out. Remove plug (−700) from control panel J11 connector (−322).

NOTE

The following steps (12 thru 19) apply only when using 6872414 test stand.

(10) Connect adapter cable (−600) between digital ohmmeter input connector (−28) and J11 connector (−322) on control panel.

(11) Push the POWER push button switch (−1A). The switch lamp lights.

(12) Select 1 RANGE pushbutton switch (−1C) and KΩ FUNCTION pushbutton switch (−1E).

CAUTION

To prevent burning the variable resistor do not attempt to measure resistance of less than 40 ohms.

NOTE

The ZERO control (−1D) is used for calibration only.

Approach feathering shaft positions from a lower angle to obtain readings.

Asterisk indicates pins in small electrical connectors.

(13) Set PIN SELECTOR switch No. 1 (−316A) at A* and PIN SELECTOR switch No. 2 (−316B) at C*. Circuit between A* and C* shall have resistance of 990 − 1010 ohms at all feathering shaft positions. Record the value at the 15° feathering shaft position.

(14) Set PIN SELECTOR switch No. 1 (−316A) at A* and PIN SELECTOR switch No. 2 (−316B) at B*. Check circuit between A* and B* on digital ohmmeter for values given in table 1.

(15) Push the POWER pushbutton switch (−1A). The switch lamp goes out.

(16) Remove adapter cable (−600) from digital ohmmeter (−28) and J11 connector (−322).

(17) Set PIN SELECTOR switches No. 1 and NO. 2 (−316A and −316B) at OFF.

NOTE

The following steps (20−28) apply only when using 6893547 test stand.

(18) Make the following functional check of the multimeter (−1) at one week (40 operational hours) intervals:

(a) Check that the multimeter (−1) is setup for 115V operation and that a fuse is installed.

(b) Set the MASTER POWER switch (−332) to ON and push the POWER switch (−1A). Select 4 WIRE Ω and AUTO range.

NOTE

The POWER switch (−1A) is a pushbutton type switch. When switch is actuated, the self−check program is executed. Display will indicate SELF−TEST OK.

(c) Connect adapter cable (−600) between multimeter (−1) and J11 connector (−322) on control panel. Connect RED plugs to HI jacks and BLACK plugs to LO jacks on multimeter.

(d) Set PIN SELECTOR No. 1 switch (−316A) at A* and PIN SELECTOR No. 2 switch (−316B) at A*.

(e) Check that the display reads 000.00 ± 5 digit.

(f) Push POWER switch (−1A).

(g) Remove adapter cable (−600) from the multimeter (−1) and J11 connector (−322).

(h) Set PIN SELECTOR switches No. 1 and No. 2 (−316A and −316B) at OFF.

(19) Connect adapter cable (−600) between multimeter (−1) and J11 connector (−322) on control panel. Connect RED plugs to HI jacks and BLACK plugs to LO jacks on multimeter (−1).

(20) Push POWER switch (−1A).

(21) Select the 4 WIRE Ω pushbutton switch (−1D) and the AUTO/MAN pushbutton switch (−1C) in the auto range. The display will show 4 Ω MAN RING in the manual range and 4 Ω in the auto range.

(22) Set PIN SELECTOR No. 1 switch (−316A) at A* and PIN SELECTOR No. 2 switch (−316B) at B*. Check circuit between A* and B* on the multimeter (−1) for the values given in table 1.

NOTE

Approach feathering shaft positions from a lower angle to obtain readings. The current in the variable resistor will be approximately 1 ma.

(23) Set PIN SELECTOR switch No. 1 (−316A) at A* and PIN SELECTOR switch No. 2 (−316B) at C*. Circuit between A* and C* shall have resistance of 990−1010 ohms at all feathering shaft positions. Record the value at the 15° feathering shaft position.

(24) Push the POWER switch (−1A).

(25) Remove the adapter cable (−600) from the multimeter (−1) and J11 connector (−322).

(26) Set PIN SELECTOR switches No.1 and No. 2 (−316A and −316B) at OFF.

(27) Attach insulation tester cable (−11) to control panel J11 connector (−322).

(28) Set ADJUST control (−3E) in the extreme counterclockwise position (zero volts).

(29) Be sure PIN SELECTOR switch No. 1 (−316A) and PIN SELECTOR switch No. 2 (−316B) are set at OFF.

WARNING

Do not attempt to connect or disconnect any item under test while instrument high voltage is energized.

(30) Turn on insulation tester POWER switch (−3G). POWER ON lamp (−3H) lights.

(31) Set the H.V. switch (−3B) to continuous and rotate ADJUST control (−3E) until 500 volts dc is indicated on voltmeter (−3C). Return H.V. switch (−3B) to OFF (center) position.

CAUTION

Do not set PIN SELECTOR switch No. 1 (−316A) and PIN SELECTOR switch No. 2 (−316B) on same letter when high voltage is on; to avoid this, always release spring−return H.V. switch to OFF (center position) before moving PIN SELECTOR switches.

(32) Check leakage between pins listed in table 2 when spring−loaded H.V. switch (−3B) is held down. H.V. ON lamp (−3A) lights. Replace part if microammeter (−3F) indicates a maximum of 250 microamps leakage.

(33) At the termination of test:

(a) Turn off power switches (−332 and −3G).

(b) Remove retractable cables (−309 and −310) from coordinator.

(c) Remove attached cable (−11) from J11 connector (−322).

(d) Rotate ADJUST control (−3E) to zero volts position (extreme counterclockwise).

(e) Set PIN SELECTOR switches No. 1 and No. 2 (−316A and −316B) at OFF.

b. Perform an equivalent noise resistance test as follows:

(1) Install the coordinator control assembly in 6799328 holding fixture (figure 27).

NOTE

The variable resistor assembly can be checked as a detail and not as a part of the control assembly. If the variable resistor is to be checked as a detail, connect the adapter cable to the variable resistor assembly rather than the control assembly.

(2) Connect adapter cable (−500) to the J1 connector (−414) of the noise test panel and to the coordinator. The ends of the cable are tagged to assure proper installation. Connect the banana plugs of cable to the oscilloscope vertical input terminals (the red plug in the RH jack and the black plug in the LH or center jacks).

(3) Plug the oscilloscope power lead into a 115 − 230 volt, 50 − 1000 cps external outlet. Receptacle (−405) on the noise test panel can be used.

(4) Before turning on the power switches, position the oscilloscope (−800) control per table 3.

Table 3. Oscilloscope Control Settings

INTENSITY and POWER (−802)	OFF
HORIZONTAL DISPLAY/ VERNIER (−803)	200 Milliseconds/cm
TRIGGER SOURCE/ LEVEL (−805)	INT + vernier to AUTO (full CCW into detented position)
VERTICAL SENSITIVITY/ VER− NIER (−806)	10 Millivolt/cm
VERTICAL AC−DC (−810)	DC
SWEEP MAGNIFIER (−812)	X1

(5) Turn on MASTER POWER switch (−322). ON lamp (−328) lights.

(6) With the coordinator lever at 90° adjust the INC variable resistor (−410) to read 1.0 milliamps on meter (−412).

(7) Turn the INTENSITY and POWER switch (−802) on. Indicator lamp (−813) lights. (There may be a slight delay.) Set the brightness of the trace to a satisfactory level with this switch.

(8) Make the adjustments listed in table 4 to the oscilloscope.

Table 4. Oscilloscope Adjustments

HORIZONTAL POSITION (−804)	Position so that the sweep goes all the way across the cathode ray tube.
FOCUS (−801)	Set as required for sharp image.
HORIZONTAL DISPLAY/ VERNIER (−803)	Set vernier to obtain desired sweep rate.

NOTE

To insure the cathode ray tube (−817) is properly adjusted repeat steps (9) and (10).

(9) Depress the STD pushbutton switch (−413) and set the trace on the bottom calibrated line of the cathode ray tube (−817) using the VERTICAL POSITION adjustment (−807).

(10) Release the STD pushbutton switch (−413) and set the trace on the center calibrated line of the cathode ray tube (−817) using the VERTICAL SENSITIVITY/ VERNIER adjustment (−806).

(11) Move the variable resistor through the full range of travel at a rate of 4 revolutions per minute.

CAUTION

Testing of the variable resistor as a detail (not installed in a coordinator control assembly) may cause a display of spikes downward from the center line of the cathode ray tube. This indicates the wiper is across both ends of the internal windings, shorting them out. This downward display of spikes is not a cause for rejection.

NOTE

Disregard the trace indication obtained when the end point of the variable resistor has been passed.

(12) Any noise spike deflecting upward from the center line of the cathode ray tube is cause for replacement of the variable resistor.

(13) At the termination of the test run, turn off the MASTER POWER switch (−332) and the INTENSITY and POWER switch (−802). Remove the adapter cable (−500).

23. Linearity Test of Variable Resistor.

Support Equipment Required

Part No./Type Designation	Nomenclature
T4289	Fixture, setting, degree rotation
6799286 6872414 or 6893547	Stand, test, coordinator

a. Install variable resistor in T4289 fixture (figure 31) and using test stand perform linearity tests as follows:

NOTE

The following detail dash numbers correspond to the identifiers located in the test stand operation manuals.

(1) (6799286 test stand) Adjust fixture base to connect variable resistor to dial. Connect adapter cable (−600) between ohmmeter input connector (−1D) and J1 connector (−322) on control panel.

(2) (6872414 test stand) Adjust fixture base to connect variable resistor to dial. Connect adapter cable (−600) between DIGITAL OHMMETER INPUT connector (−28) and J11 connector (−322) on control panel.

(3) (6893547 test stand) Adjust fixture base to connect variable resistor to dial. Connect adapter cable (−600) between multimeter input connector (−1F) and J11 connector (−322) on control panel. Connect RED plugs to the HI jacks and BLACK plugs to the LO jacks on multimeter.

(4) Attach retractable cable (−309) to variable resistor cable connector.

(5) Turn on MASTER POWER switch (−332). ON lamp (−328) lights.

(6) (6799286 test stand) Turn on POWER UNIT switch (−2E). INDICATOR lamp (−2D) lights.

(7) (6872414 and 6893547 test stand) Push the POWER switch (−1A). (6872414 switch lamp lights.)

NOTE

Asterisk indicates pins in small electrical connectors.

(8) Set PIN SELECTOR switch No. 1 (−316A) at A* and PIN SELECTOR switch No. 2 (−316B) at B*.

(9) Rotate calibrated wheel on fixture to 306° and lock with spring loaded pin.

(10) Release calibrated wheel center knob and rotate variable resistor shaft counterclockwise, while wheel is pinned at 306°, until 990 − 1010 ohms is indicated on digital ohmmeter or multimeter.

(11) Slowly rotate variable resistor shaft clockwise to exact point at which 990 − 1010 ohms reading begins to decrease.

(12) Lock center knob to calibrated wheel at this point.

(13) Release pin locking calibrated wheel at 306°.

(14) This is the electrical end point below which resistance decreases and above which it remains constant.

NOTE

No open circuit between A* and B* is acceptable at any shaft position between 90° and 345°.

Approach feathering shaft positions from a lower angle to obtain readings.

(15) Check digital ohmmeter or multimeter readout at the shaft rotational points per table 5 and figure 31.

Table 5. Digital Readout for Shaft Rotation

Shaft Rotation CCW°	Digital Readout A* to B* (ohms)
153	49.5 − 80.2
290	887 − 922.7
170	Linear
190	Linear
210	Linear
230	Linear
250	Linear
270	Linear

(16) Set PIN SELECTOR switch No. 1 (−316A) at A* and PIN SELECTOR switch No. 2 (−316B) at C*.

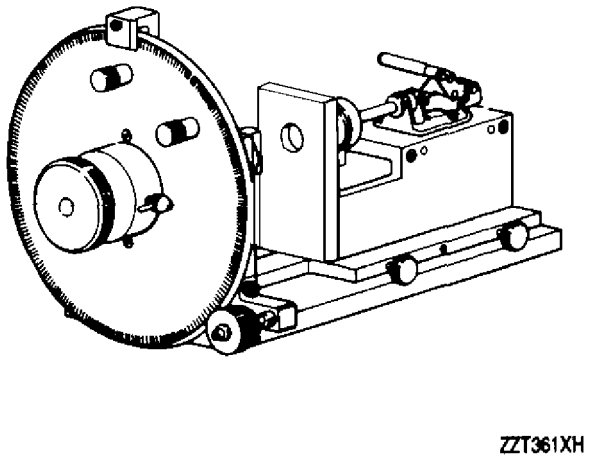

Figure 30. T4289 Degree Rotation Setting Fixture

(17) Digital ohmmeter or multimeter readout at all shaft positions shall read 990 − 1010 ohms.

(18) Set PIN SELECTOR switch No. 1 (−316A) at GND and PIN SELECTOR switch No. 2 (−316B) at B*.

(19) Replace variable resistor if readout indicates less than five megohms.

(20) (6799286 test stand) At termination of linearity test, shut off power switches (−332 and −2E), remove retractable cable (−309) and adapter cable (−600).

(21) (6872414 and 6893547 test stand) At termination of linearity test, shut off power switches (−332 and −1A), remove retractable cable (−309) and adapter cable (−600).

(22) Set PIN SELECTOR switches at OFF.

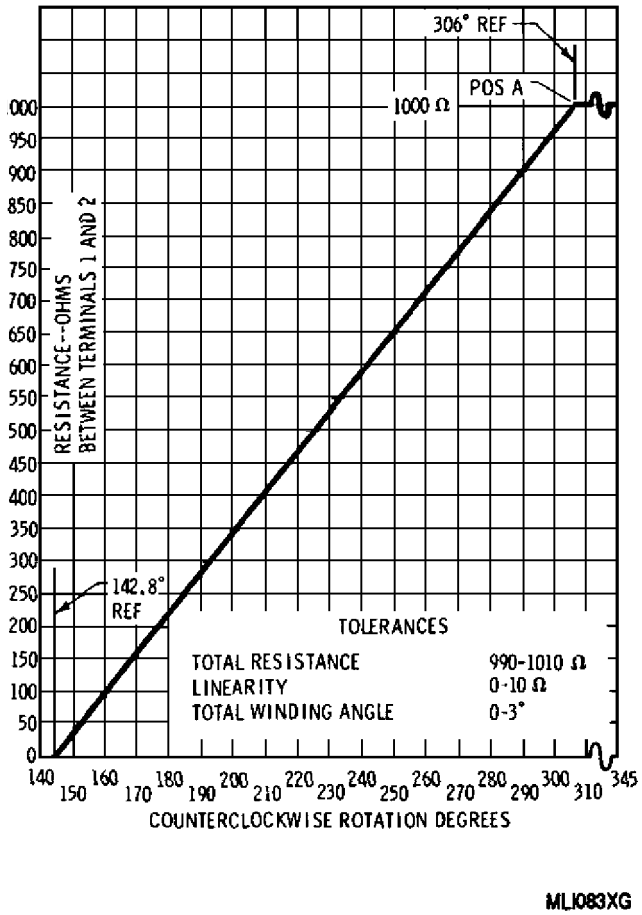

Figure 31. Variable Resistor Schedule

DEPOT MAINTENANCE

DISASSEMBLY, CLEANING, INSPECTION, ASSEMBLY, AND TESTING

COMPRESSOR BLEED AIR FILTER

Reference Material

None

Alphabetical Index

Subject **Page No.**

Compressor Bleed Air Filter 2
Assembly 2
Cleaning 2
Disassembly 2
Inspection 2
Testing 3
Introduction 2

Record of Applicable Technical Directives

None

1. **INTRODUCTION.**

2. This work package (WP) provides the instructions for disassembly, cleaning, inspection, assembly, and testing of the compressor bleed air filter used on the T56−A−427 turboprop engine.

3. **COMPRESSOR BLEED AIR FILTER.**

4. COMPRESSOR BLEED AIR FILTER − DISASSEMBLY.

a. Disassemble using figure 1 as a guide.

5. COMPRESSOR BLEED AIR FILTER − CLEANING.

a. Ultrasonic cleaning equipment should be used if available. If this equipment is not available, proceed as follows:

Materials Required

Specification No./Part No.	Nomenclature
MIL−PRF−680, Type II	Solvent, Dry Cleaning

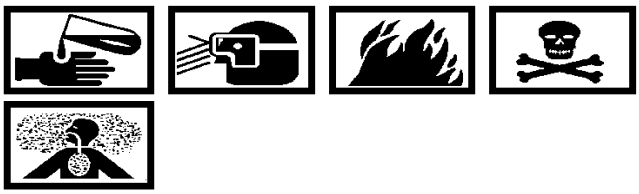

Dry Cleaning Solvent MIL−PRF−680, Type II **3**

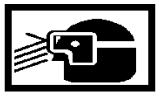

Compressed Air **56**

CAUTION

Do not use cloth to dry filter element as lint may get into speed sensitive valve when filter is installed on engine.

(1) Use a soft bristle brush and wash filter in MIL−PRF−680, Type II dry cleaning solvent.

(2) Dry filter by directing low pressure air from the inside to outside.

6. COMPRESSOR BLEED AIR FILTER − INSPECTION.

a. Inspect filter for dirt and damage.

b. Replace unserviceable filters.

7. COMPRESSOR BLEED AIR FILTER − ASSEMBLY.

Materials Required

Specification No./Part No.	Nomenclature
3500AS12	Seal, Metallic
NS165	Anti−seize Compound (Never Seez)
MS20995C32	Lockwire

a. Seal (2, figure 1) may be reused provided it is not damaged, seats properly, and meets all test requirements when assembled.

CAUTION

Prevent lubricating oil from entering filter.

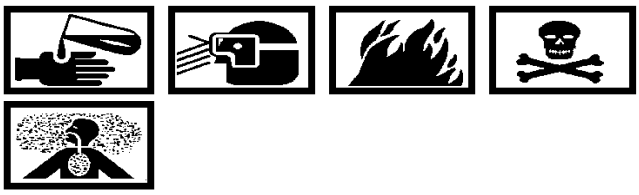

Anti−seize Compound (Never Seez) NS165 **31**

b. Apply Anti−seize Compound (Never Seez) NS165 on element assembly (1) threads and install housing (3) on element assembly. Torque housing 25 − 30 lb ft. and lockwire. (QA)

8. COMPRESSOR BLEED AIR FILTER − TESTING.

Support Equipment Required

Part No./Type Designation	Nomenclature
6799152	Stand assembly, test, air valves

a. Cap outlet side of filter and apply 350 psi air pressure to inlet side for two minutes. No leakage shall be permitted.

b. Using 6799152 test stand assembly apply 78 − 82 psi air pressure to inlet side of filter and with outlet side throttled to obtain a flow of 25 cfm (1.9 pounds per minute) of air at standard room temperature and atmospheric conditions. Pressure drop across filter shall be no greater than 4.5 psi.

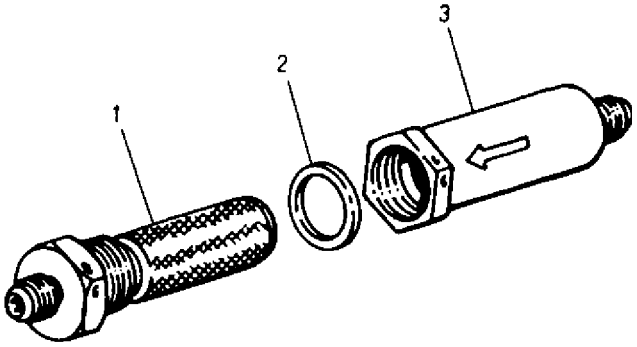

MLK018XG

1. Element Assembly 2. Seal 3. Housing

Figure 1. Compressor Bleed Air Filter

DEPOT MAINTENANCE

DISASSEMBLY, INSPECTION, REPAIR, TESTING, AND ASSEMBLY

THRUST SENSITIVE SWITCH

Reference Material

None

Alphabetical Index

Subject **Page No.**

Introduction 2
Thrust Sensitive Switch 2
Assembly 6
Disassembly 2
Inspection and Repair 2
Carbon Switch 4
Harness Assembly 2
Testing 6

Record of Applicable Technical Directives

None

1. **INTRODUCTION.**

2. This work package (WP) provides the instructions for disassembly, inspection, repair, testing, and assembly of the thrust sensitive switch used on the T56−A−427 turboprop engine.

3. **THRUST SENSITIVE SWITCH.**

4. THRUST SENSITIVE SWITCH − DISASSEMBLY.

a. Remove parts using figure 1 as a guide and the following:

b. Remove silicone rubber from housing with a non−metallic scraper.

5. THRUST SENSITIVE SWITCH − INSPECTION AND REPAIR.

6. Harness Assembly.

Support Equipment Required

Part No./Type Designation	Nomenclature
6796992	Expander, Teflon tubing
260−6LXP	Multimeter

Materials Required

Specification No./Part No.	Nomenclature
QQ−S−571, Sn 60	Solder
MIL−A−6091	Denatured Alcohol
MIL−PRF−680, Type II	Solvent, Dry Cleaning

a. Inspection.

(1) Inspect harness assembly (18, figure 1), for damage or deterioration.

(2) Inspect plug (28) for broken or damaged pins.

(3) Inspect plug contact spring tension by inserting an appropriate sized socket onto each pin.

b. Disassembly.

CAUTION

Spreading spring clips too far will deform them.

(1) Spread spring clip (22, figure 1) next to fitting (21) and slide it back onto Teflon tubing (23).

(2) Spread spring clip (24) next to ferrule (26) and slide it back onto Teflon tubing (23).

(3) Remove fitting (21) and spring clip (22).

(4) Remove Teflon tubing (23).

(5) Remove coupling nut (25) from electrical plug (28) and remove ferrule (26).

(6) Loosen grommet (27) and slide it back on cables (19). Ensure no cables are broken when loosening grommet.

(7) Unsolder and extract any broken cable.

c. Cleaning.

Dry Cleaning Solvent MIL−PRF−680, Type II **3**

(1) Using MIL−PRF−680, Type II dry cleaning solvent, clean Teflon tubing (23), fitting (21) and ferrule (26). Allow assembly to air dry.

d. Assembly.

NOTE

Shielding termination at connector end of cable shall be 2 1/2 in. from end of cable. At other end of cable, shielding termination shall be 3/4 in. from end of cable and conductor insulation termination shall be 1/2 in. from end. Shielding termination shall be covered with insulation sleeving.

(1) Replace any broken cable with sufficient length so that there is no tension on solder joint when Teflon tubing is bent or pulled taut.

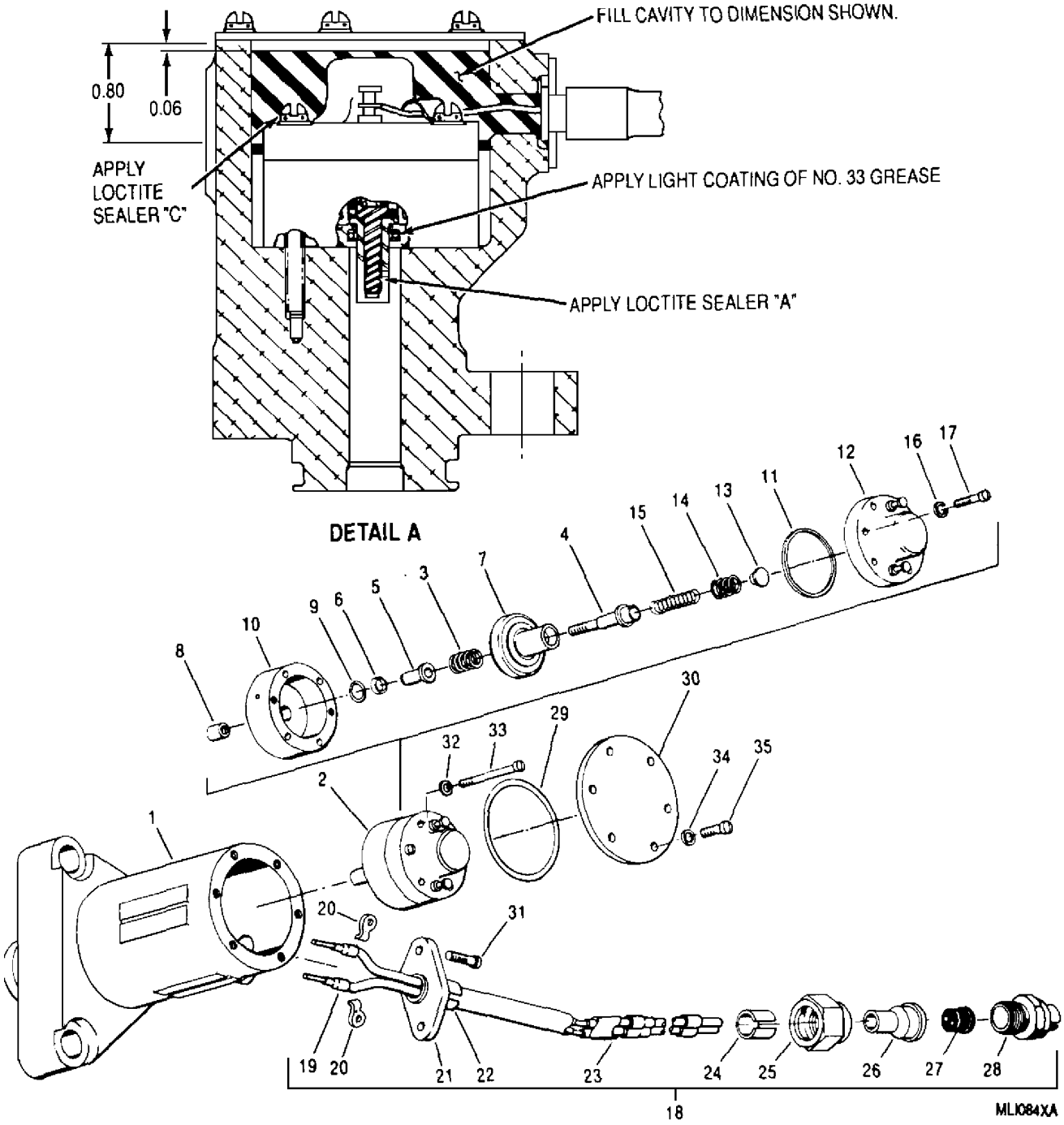

1.	Housing	10.	Body	18.	Harness Assembly	27.	Grommet
2.	Carbon Switch	11.	Gasket	19.	Cable	28.	Plug
3.	Overtravel Spring	12.	Contact and Cap Assembly	20.	Clamp	29.	Preformed Packing
4.	Plunger			21.	Fitting	30.	Cover
5.	Sleeve	13.	Spring Seat	22.	Spring Clip	31.	Screw
6.	Glyd Ring	14.	Return Spring	23.	Teflon Tubing	32.	Washer
7.	Moving Contact	15.	Return Spring	24.	Spring Clip	33.	Screw
8.	Nut	16.	Lockwasher	25.	Coupling Nut	34.	Washer
9.	Preformed Packing	17.	Screw	26.	Ferrule	35.	Screw

Figure 1. Thrust Sensitive Switch

Denatured Ethyl Alcohol MIL−A−6091 24

CAUTION

Use solder sparingly, excess may cause connections to short circuit when grommet is installed. Clean flux from soldered connection with alcohol.

(2) Install a new wire tip on connector end of cable. To install wire tips, strip cable 1/4 in. back. Tin cable sparingly. Install tip and dip tip about 1/16 in. into molten solder. Clean flux from soldered connection with alcohol.

CAUTION

Ensure that cables do not buckle when grommet is pushed over them.

(3) Thread cable through grommet and solder cable to pins A and B of plug (28). Use QQ−S−571, Sn 60 solder and resin flux. Clean flux from soldered connection with alcohol. Connection shall withstand 15 pound pull−off tension.

(4) Slide grommet over soldered connections.

CAUTION

Ensure clip does not cut Teflon tubing. (See figure 2 for connector index location.)

(5) Slip clip (24) and coupling nut back onto Teflon tubing. Spread tubing, using Teflon tubing expander tool (6796992) and slip it onto ferrule (26). Spread clip with a blunt tool and slip it over joint.

(6) Slip dip (22) onto Teflon tubing. Spread Teflon tubing, as in step (5) and slip it over fitting (21). Spread clip with a blunt tool and slip it over joint.

(7) Thread cables through fittings and Teflon tubing. Install nut (25) onto plug (28) and tighten. Fill conduit with Teflon rod to prevent Teflon tubing from kinking.

e. Testing.

(1) Each circuit shall pass a continuity test and an insulation test.

(2) Insulation test shall be made from each circuit to all other circuits, to shell of connector, and to fitting. Use 500 volts DC for a minimum of 10 seconds. Minimum resistance acceptable is 500,000 ohms.

7. Carbon Switch.

Support Equipment Required

Part No./Type Designation	Nomenclature
——	Power Supply
——	Voltmeter
——	Ammeter
——	Megohmmeter
Locally Fabricated	Test Fixture with force indicator and position indicator

Materials Required

Specification No./Part No.	Nomenclature
TT−T−291	Mineral Spirits
KW11976, Loctite “A”	Sealer
KW12374	Gasket
KW15021, Loctite “C”	Sealer
KW41−001F	Packing, preformed
No. 33, Dow Corning	Grease

a. Disassembly.

(1) Remove resin compound from screw heads and remove screws (17, figure 1) and lockwashers (16).

(2) Separate body (10) and contact and cap assembly (12).

WARNING

Avoid breathing sealer fumes.

(3) Remove nut (8) on plunger (4) by heating. Heat until Loctite sealer “A” fumes. Keep other parts cool with a damp cloth.

(4) Remove gasket (11) from contact and cap assembly (12).

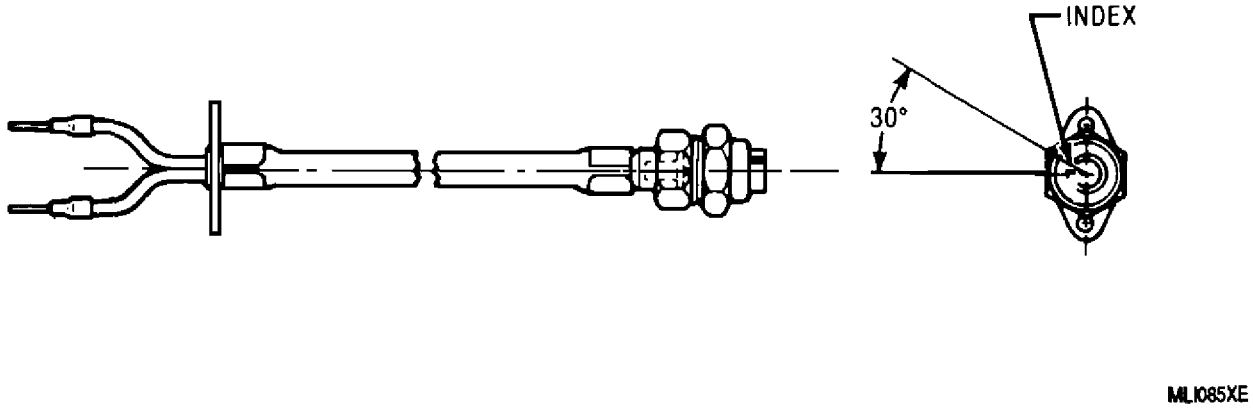

Figure 2. Thrust Sensitive Switch Harness Assembly Connector Index Location

(5) Remove glyd ring (6) and preformed packing (9) from body (10). Discard preformed packing.

Paint Thinner TT−T−291 **8**

(6) Clean carbon switch (2) with lint free cloth or brush using mineral spirits TT−T−291. Wipe or air dry.

b. Inspection.

(1) Inspect parts for wear or breakage. Replace contact and cap assembly (12) and moving contact (7) if pitted or cracked.

c. Assembly.

(1) Install overtravel spring (3), plunger (4) and sleeve (5) in moving contact (7).

(2) Apply Loctite sealer “A” to threads of plunger (4) and secure with nut (8) (See Detail A, figure 1). Torque nut to 10 lb in. Cure sealer at 75°F (24°C) for eight hours or 350°F (177°C) for 5 minutes. (QA)

(3) Install preformed packing (9) in body (10).

(4) Apply light coating of grease No. 33 to body bore (10) and to glyd ring (6) (See Detail A, figure 1). Install glyd ring over preformed packing in body.

(5) Install gasket (11) in contact and cap assembly (12).

(6) Install moving contact (7) in body (10).

(7) Install return spring (15) in plunger (4).

(8) Install return spring (14) on shoulder of plunger (4). Install spring seat (13) on spring ends (14 and 15).

(9) Apply Loctite sealer “C” to screws (17), and secure contact and cap assembly (12) to body (10) with two lockwashers (16) and screws (17) (See Detail A, figure 1). Torque screws to 5−7 lb in. (QA)

d. Testing.

(1) Bring force indicator against end of plunger, set position indicator to zero, connect voltmeter across switch terminals. Connect ammeter and power supply to terminals.

(2) Move plunger 0.048 in. from normal position and read indication on force gage. The force shall be 12 lbs minimum.

(3) Move plunger until voltmeter shows change, position indicator should read 0.048 − 0.062 in.

(4) Move plunger to 0.100 in., adjust power supply to 0.2 amp, voltmeter must read less than one volt.

(5) Move plunger until it bottoms, position indicator reading must exceed 0.181 in.

(6) Check the insulation with a megohmmeter. Reading must be 2 megohms at 500 volts DC in the following conditions:

(a) With contacts open, between terminals and between terminals and screws.

(b) With contacts closed, between terminals and screws.

8. THRUST SENSITIVE SWITCH − ASSEMBLY.

Materials Required

Specification No./Part No.	Nomenclature
MIL−A−6091	Denatured Alcohol
AS 3085−131	Packing, Preformed
QQ−S−571, Sn 60	Solder
RN 601 or RTV 3118	Rubber, silicone
——	Flux, resin

a. Install harness assembly (18, figure 1) and screws (31). Torque screws to 5 − 7 lb in. (QA)

b. Solder cables to terminals of carbon switch (2) (cable from connector pin A to switch post A and cable from connector pin B to switch post B), using QQ−S−571, Sn 60 solder and resin flux.

Denatured Ethyl Alcohol MIL−A−6091 24

c. Clean flux from terminal with MIL−A−6091 alcohol.

d. Install clamps (20), washers (32), and screws (33). Torque screws to 5 − 7 lb in. (QA)

e. Fill cavity between carbon switch (2) and cover (30) with silicone rubber compound RTV 601 or RTV 3118 as shown in Detail A, figure 1.

f. Install preformed packing (29), cover (30) washers (34) and screws (35). Torque screws to 5 − 7 lb in. (QA)

9. THRUST SENSITIVE SWITCH − TESTING.

Support Equipment Required

Part No./Type Designation	Nomenclature
Locally Fabricated	Test Fixture with force indicator and position indicator

a. Set up switch assembly with external circuits similar to those shown in figure 3.

b. Perform functional check using test fixture (figure 4) as follows:

(1) With test rings No. 1 and 2 removed and Surface A (test fixture) flush with Surface B (switch assembly), continuity shall be made from pins A to B.

(2) With test ring No. 1 installed on test fixture and Surface B (switch assembly) flush with Surface C (test ring No. 1), continuity shall be made from pins A to B.

(3) With test ring No. 2 installed on test ring No. 1 and Surface B (switch assembly) flush with Surface D (test ring No. 2), an open circuit shall exist between pins A and B.

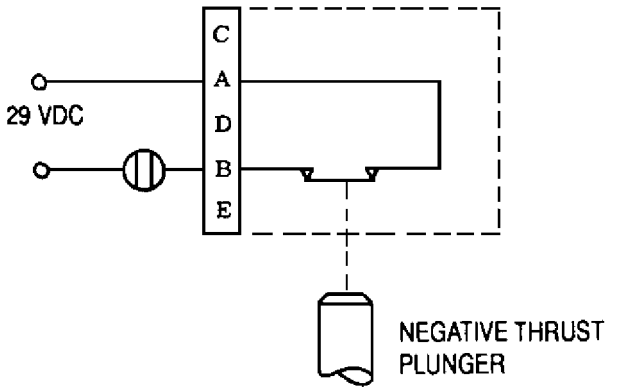

Figure 3. Thrust Sensitive Switch External Circuits

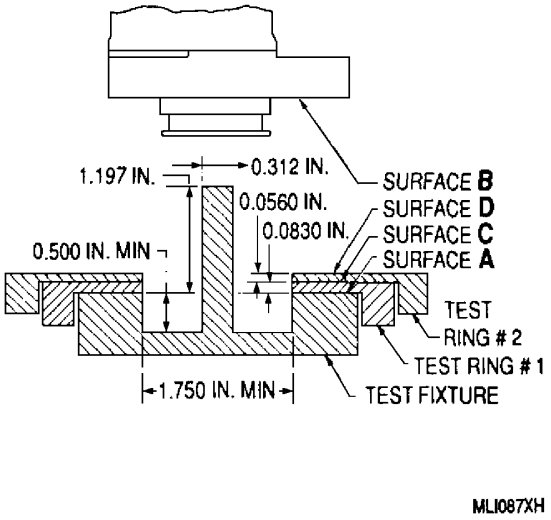

Figure 4. Thrust Sensitive Switch Test Fixture

DEPOT MAINTENANCE

INSPECTION AND TESTING

MAGNETIC PLUGS

Reference Material

None

Alphabetical Index

Subject **Page No.**

Introduction 2
Magnetic Plugs 2
Inspection 2
Testing 2

Record of Applicable Technical Directives

None

1. **INTRODUCTION.**

2. This work package (WP) provides the instructions for inspection and testing of the magnetic plugs used on the T56−A−427 turboprop engine.

3. **MAGNETIC PLUGS.**

4. MAGNETIC PLUGS − INSPECTION.

a. Inspect magnetic plugs for cracked epoxy potting compound as follows:

(1) Any number of cracks in potting compound is permissible providing there are no chunks missing at any one crack intersection.

(2) Replace magnetic plugs that have missing chunks.

5. MAGNETIC PLUGS − TESTING.

Support Equipment Required

Part No./Type Designation	Nomenclature
260−6LXP	Multimeter
——	Oven

a. Plug shall lift a steel block having a minimum weight of eight ounces.

b. Torque plug to 240 − 300 lb in. in a suitable threaded fixture.

WARNING

Heated parts will cause skin damage (burns). Use clean insulated gloves to handle parts.

c. Heat in an oven to 300°F (149°C) for 15 minutes.

d. Remove plug and fixture from oven and immediately make the following checks using a multimeter.

NOTE

Prevent heat loss as much as possible during this check.

(1) There shall be continuity to only one pole piece when checking from center past connector to both magnetic pole pieces.

(2) The pole piece which did not indicate continuity in the preceding check shall show continuity when checking from outer shell to both magnetic pole pieces.

(3) There shall be continuity from center post connector to outer shell with a conductor across the magnetic poles.

(4) Remove conductor from magnetic poles. The resistance between the center post connector and outer shell must be at least two megohms.

DEPOT MAINTENANCE

CLEANING, DISASSEMBLY, INSPECTION, REPAIR, ASSEMBLY, AND TESTING

ELECTRICAL FEATHER SOLENOID ASSEMBLY

Reference Material

Cleaning and Corrosion Treatment − Standard Practices . . . . . WP 008 00

Alphabetical Index

Subject **Page No.**

Electrical Feather Solenoid 2
Assembly 7
Cleaning 3
Disassembly 2
Inspection 5
Plunger Assembly Recoating 6
Repair 5
Testing 10
Introduction 2

Record of Applicable Technical Directives

None

1. **INTRODUCTION.**

2. This work package (WP) provides instructions for cleaning, disassembly, inspection, repair, assembly, and testing of the electrical feather solenoid used in the T56−A−427 turboprop engine.

3. **ELECTRICAL FEATHER SOLENOID ASSEMBLY.**

4. ELECTRICAL FEATHER SOLENOID ASSEMBLY − DISASSEMBLY.

Materials Required

Specification No./Part No.	Nomenclature
MIL−PRF−6081, Grade 1010	Oil, lubricating

a. Remove radiation sleeve (7, figure 1) by turning to left and right while pulling with hand to free it from silicone rubber potting compound.

b. Remove gasket (6) and discard.

c. Remove nuts (23), gaskets (22), cover (10), insulator (9), and gasket (8).

d. Remove silicone rubber compound with fingers and discard.

e. Remove switch and resistor assembly (2).

f. Remove switch studs (24) from switch and resistor assembly (2).

CAUTION

Exercise care in handling white and green wires as breakage will require replacement of coil and housing assembly (1).

g. Unsolder and disconnect the red, yellow and white wires from terminal posts, remove excess solder and straighten (figure 2).

h. Remove bolts, lockwire tie lugs (4, figure 1), and tab washers (5).

i. Pull electrical connector receptacle (3) out to limit of connecting wires.

j. Remove silicone rubber compound from the cavity and wires with suitable tool.

k. Unsolder green wire from receptacle pin A.

l. Pull electrical connector receptacle (3) with attached red and yellow wires from coil and housing assembly (1).

CAUTION

Boot (18, figure 1) retains overtravel coupling (15) and plunger (16) assemblies. Remove boot with care to prevent overtravel coupling and plunger assembly from sliding free and being damaged.

m. Remove boot (18) and garter spring (19).

NOTE

Procedures outlined below are not required unless replacement of plunger assembly (16) is necessary.

n. Disassemble plunger assembly (16) as follows:

(1) Place plunger assembly (16) in a “V” block or similar fixture with soft surface to prevent damage to plunger.

(2) Drive pin (17) from plunger using 3/32 in. diameter pin punch.

(3) Hold plunger assembly in a fixture which will not damage surface and unscrew overtravel coupling base (11).

o. Disassemble overtravel coupling as follows:

Lubricating Oil, MIL−PRF−6081, (Grade 1010) **7**

NOTE

The following step is not applicable unless the unit fails to pass load test of figure 2. If overtravel unit is not disassembled, lubricate it sparingly with MIL−PRF−6081, Grade 1010, at the overtravel coupling ball assembly (13).

(1) Remove insulation sleeving (20) and lockwire. Unscrew overtravel coupling retainer (14) from overtravel coupling base (11).

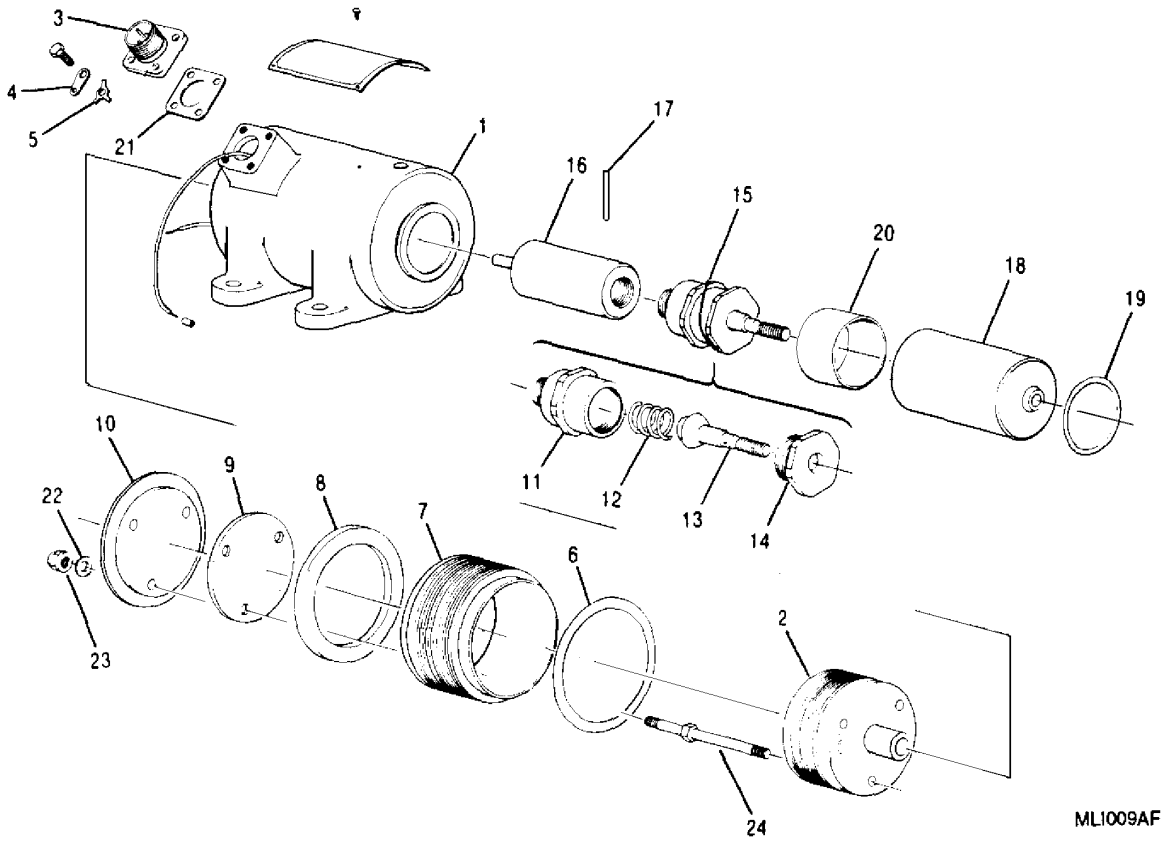

1.	Coil and Housing Assembly	9.	Terminal Insulation	17.	Pin
2.	Switch and Resistor Assembly	10.	Radiation Cap	18.	Boot Seal
3.	Electrical Connector Receptacle	11.	Overtravel Coupling Base	19.	Garter Spring
4.	Lockwire Tie Lug	12.	Compression Spring	20.	Insulation Sleeving
5.	Tab Washer	13.	Overtravel Coupling Ball Assembly	21.	Gasket
6.	Sleeve Gasket	14.	Overtravel Coupling Retainer	22.	Gasket
7.	Radiation Sleeve	15.	Overtravel Coupling Assembly	23.	Nut
8.	Sleeve Top Gasket	16.	Plunger Assembly	24.	Switch Stud

Figure 1. Electrical Feather Solenoid Assembly Details

5. ELECTRICAL FEATHER SOLENOID ASSEMBLY − CLEANING.

Materials Required

Specification No./Part No.	Nomenclature
MIL−C−85043	Cloth, low lint
MIL−PRF−680, Type II	Solvent, Dry Cleaning

Dry Cleaning Solvent
MIL−PRF−680, Type II

CAUTION

Do not immerse coil and housing assembly or switch and resistor assembly in dry cleaning solvent.

a. Clean parts with low lint cloth dampened with MIL−PRF−680, type II dry cleaning solvent. Wipe dry or air dry.

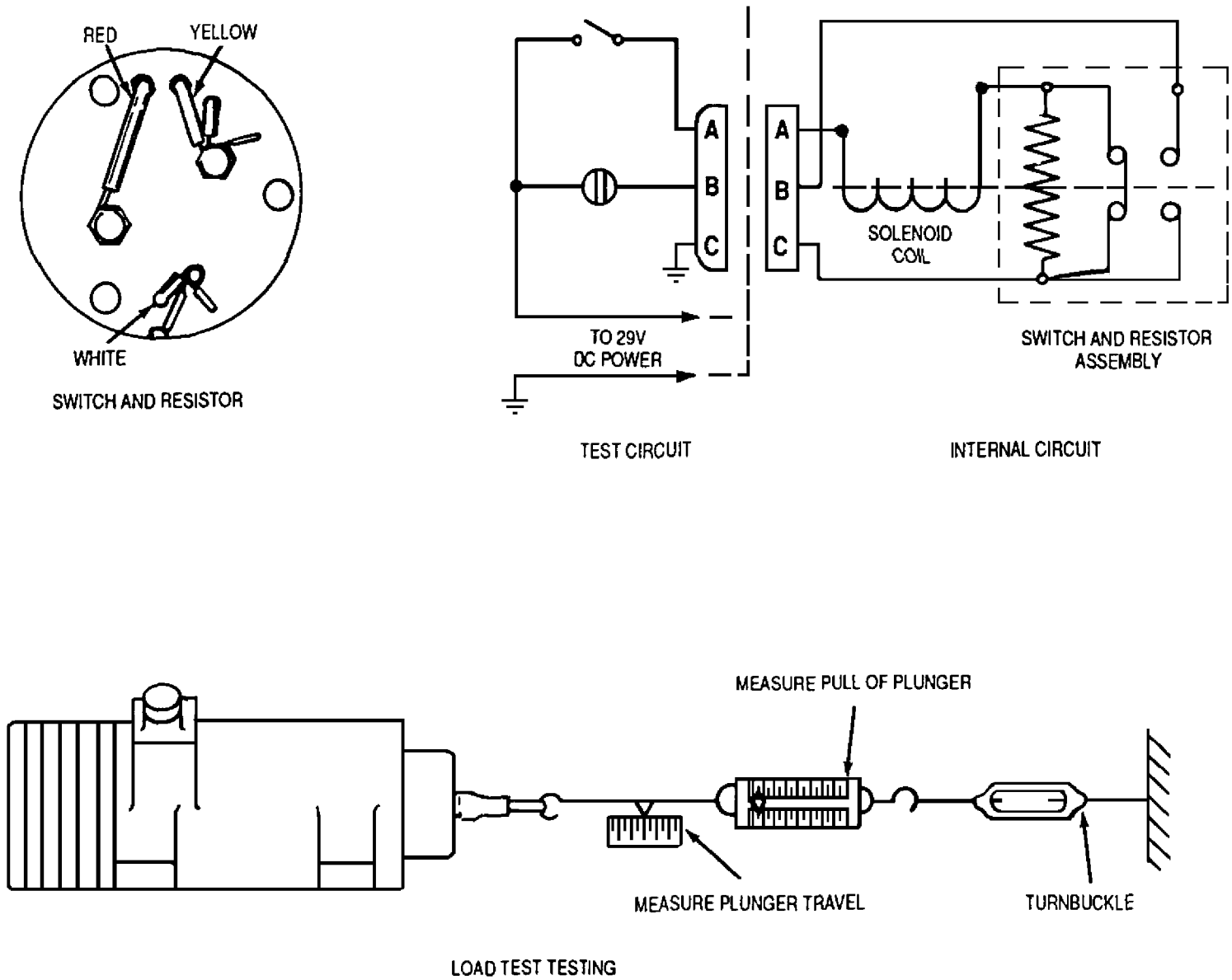

Figure 2. Electrical Feather Solenoid Circuit and Load Testing

6. ELECTRICAL FEATHER SOLENOID ASSEMBLY − INSPECTION.

Support Equipment Required

Part No./Type Designation	Nomenclature
6799676 or equivalent	Tester, spring, 0−150 pound range, 1/4 pound graduations

CAUTION

The satin grey color inside of retainer is a lubricating coating and must not be polished off. The appearance of this coating will vary with wear.

a. Inspect electrical feather solenoid assembly. Refer to table 1.

7. ELECTRICAL FEATHER SOLENOID ASSEMBLY − REPAIR.

a. Repair electrical feather solenoid assembly. Refer to Disposition column, table 1.

b. Replace parts in electrical feather solenoid assembly not within serviceable limits after repair.

Table 1. Electrical Feather Solenoid Assembly − Inspection and Repair

Condition	Serviceable Limits	Repairable Limits	Disposition
Bent electrical connector receptacle.	Not serviceable.	Not repairable.	Condemn electrical connector receptacle exceeding serviceable limits.
Corroded pins on electrical connector receptacle.	Not serviceable.	Not repairable.	Condemn electrical connector receptacle exceeding serviceable limits.
Wear on coil and housing assembly plunger cavity ID at 0.25 in. and 1.00 in. from open end, measuring at 90° to mounting plane.	Diameter at open end shall not exceed diameter 1.00 in. from open end by more than 0.003 in. 1.010 in. max diameter at open end of bore.	Not repairable.	Condemn coil and housing assembly exceeding serviceable limits.
Radial grooves in coil and housing sleeve ID (approximately 0.5 in. from rear end, caused by movement of tail end of plunger).	0.010 in. max depth.	Not repairable except for blending into adjacent area.	Protect switch during blending operation to prevent contamination through hole at bottom of plunger cavity. Blend radial grooves into adjacent area. Condemn coil and housing assembly exceeding serviceable limits.
Linear scoring or galling on surface of plunger assembly.	0.010 max depth below original OD.	Not repairable.	Sharp edges on wear marks or nicks should be stoned and polished. Condemn plunger assembly exceeding serviceable limits.

Table 1. Electrical Feather Solenoid Assembly − Inspection and Repair (contd)

Condition	Serviceable Limits	Repairable Limits	Disposition
Loss or damage of grey Electrofilm coating.	Not serviceable.	Exceeds serviceable limits.	Recoat plunger assembly per paragraph 8, this WP.
Switch and resistor assembly continuity and resistance:			
Solenoid in de−energized position.	0.05 ohms max resistance between white and yellow wire. There should be no continuity of circuit between red and yellow wire.	Not repairable.	Condemn switch and resistor assembly exceeding serviceable limits.
Solenoid in energized position or plunger assembly manually pushed in to limit and held in that position.	29−31 ohms resistance between white and yellow wire. There should be continuity of circuit between red and yellow wire.	Not repairable.	Condemn switch and resistor assembly exceeding serviceable limits.
Resistance of coil and housing assembly.	0.97−1.1 ohms resistance between white wire and pin A. 2.0 megohms min at 500 volts DC for at least ten seconds between white wire and housing (ground).	Not repairable.	Condemn coil and housing assembly exceeding serviceable limits.
Continuity of receptacle assembly and connecting wires.	There should be continuityof circuit between red wire and pin B. There should be continuity of circuit between yellow wire and pin C.	Not repairable.	Condemn receptacle assembly exceeding serviceable limits.
Visual damage or wear to overtravel coupling assembly.	Not serviceable.	Not repairable.	Condemn overtravel coupling assembly exceeding serviceable limits.
Wear or damage to compression spring.	Using 6799676 tester (figure 3) or equivalent, force shall be a min. of 13 lbs. at a height of 0.632 in.	Not repairable.	Condemn compression spring exceeding serviceable limits.

8. ELECTRICAL FEATHER SOLENOID ASSEMBLY − PLUNGER ASSEMBLY RECOATING.

Materials Required

Specification No./Part No.	Nomenclature
MIL−T−81533	Trichloroethane, 1, 1, 1
Type 66−C	Electrofilm (CAGE 85932)

a. Recoat plunger assembly as follows:

CAUTION

Do not remove chrome plate from surface of plunger assembly.

NOTE

Complete removal of all Electrofilm is not necessary.

Trichloroethane MIL−T−81533 **10**

(1) Thoroughly clean plunger using vapor blast, steel wool, or light wire brushing per WP 008 00. Final clean by vapor degreasing with MIL−T−81533 1,1,1 trichloroethane.

CAUTION

Shell life of Type 66−C Electrofilm is six months.
Avoid unnecessary build−up.

(2) With plunger at room temperature, dip in Electrofilm until plunger working surface is coated.

WARNING

Heated parts will cause skin damage (burns). Use clean insulated gloves to handle parts.

(3) Bake plunger in a controlled oven at 375 − 400°F (191 − 204°C) for approximately one hour minimum.

(4) Remove all excess Electrofilm from switch actuation pin.

b. Normal wear during maximum life of solenoid will not affect operation.

c. Surface conditions prohibiting smooth free action of plunger assembly requires replacement of affected parts.

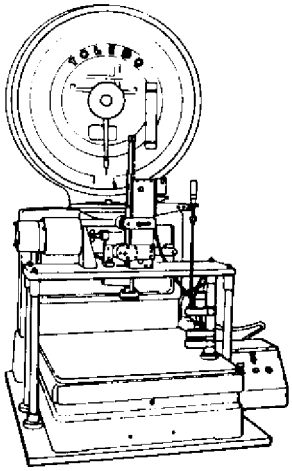

ZZT344XE

Figure 3. 6799676 Spring Tester

9. ELECTRICAL FEATHER SOLENOID ASSEMBLY − ASSEMBLY.

Materials Required

Specification No./Part No.	Nomenclature
AMS 3410	Flux, resin
A4004	Primer (CAGE 71984)
KW11834	Gasket
KW11866	Gasket
KW11867	Gaskets
KW11897	Kit, potting
KW11926	Kit, potting
MS171502	Pin
MIL−S−6872	Solder
MS20995C32	Lockwire
O−A−51	Acetone
RTV−501	Silastic
6850709−220000	Sleeving, insulation
——	Silastic Catalyst “A”Rubber, silicone compound (CAGE 71984)

a. Assemble electrical feather solenoid assembly using figure 1 and the following steps.

NOTE

On all soldered connections use MIL−S−6872 solder and AMS 3410 resin flux.

b. Install switch and resistor assembly (2, figure 1) into coil and housing assembly (1) as follows:

(1) Thread white wire through hole nearest notch in end of switch body as illustrated in figure 2.

(2) Insert 3/16 in. exposed ends of red and yellow wires into their respective holes and extend through receptacle base.

(3) Wrap tinned ends of wire around respective connecting posts and solder.

(4) Install switch studs (24, figure 1) and torque to 36−40 lb in. (QA)

c. Install electrical connector receptacle (3) as follows:

NOTE

Length of the three wires extending through receptacle mounting base should be 5/8−7/8 from face of base. Insulation should be removed 3/16 in. from ends of wires and exposed ends tinned.

(1) Slide one insulator over each of the three wires and install gasket (21) in place.

(2) Solder wires to electrical connector receptacle as follows:

(a) Green wire to pin A.

(b) Red wire to pin B.

(c) Yellow wire to pin C.

(3) Slide insulators over solder cups of pins in electrical connector receptacle (3).

NOTE

Potting kit ingredients consist of Silastic RTV−501 and Silastic Catalyst A. Prepare compound by mixing (by weight) 1 ounce RTV−501 with 1/20 ounce Catalyst A. Pot life of mixture is approximately three hours at 77°F (31°C). Shelf life of Silastic RTV−501 is one year minimum when refrigerated at 32°F (0°C).

(4) Install potting in electrical connector receptacle (3) as follows:

Acetone O−A−51 **61**

(a) Clean part to be potted with O−A−51 acetone.

(b) Prime part with A4004 primer.

(c) Use KW11926 potting kit.

(d) Place coil and housing assembly (1) with receptacle base up.

(e) Fill receptacle base cavity 3/16 in. from top with silicone rubber compound.

(5) Seat electrical connector receptacle (3) on base with polarizing key toward front of plunger assembly (16) and secure with tab washers (5), lockwire tie lugs (4), and bolts.

(6) Wipe off excess silicone rubber compound and bend washer tabs to lock bolts.

d. Install radiation sleeve (7) and radiation cap (10) as follows:

(1) Place coil and housing assembly (1) in vertical position with switch and resistor assembly (2) up.

(2) Place gasket (6) on radiation sleeve (7) and install over switch and resistor assembly (2).

CAUTION

Compound must cover terminals and wires, but final level must be 1/8 in. minimum from top of radiation sleeve. Be sure positions of wire before pouring silicone rubber.

NOTE

Potting kit ingredients consist of Silastic RTV−501 and Silastic Catalyst A. Prepare compound by mixing (by weight) 1 ounce RTV−501 with 1/20 ounce Catalyst A. Pot life of mixture is approximately three hours at 77°F (31°C). Shelf life of Silastic RTV−501 is one year minimum when refrigerated at 32°F (0°C).

(3) Install potting over switch and resistor as follows:

Acetone O−A−51 **61**

(a) Clean part to be potted with O−A−51 acetone.

(b) Prime part with A4094 primer.

(c) Use KW 11897 potting kit.

(d) Pour silicone rubber compound over switch and resistor assembly (2). Let set 15 minutes and then add compound as necessary.

(e) Allow 24 hours for silicone rubber compound to cure before removing coil and housing assembly from vertical position.

(4) Install terminal insulation (9), gasket (8), radiation cap (10), gaskets (22), and nuts (23) in that order.

(5) Torque nuts (23) to 10−12 lb in. and lockwire. (QA)

e. Assemble overtravel coupling assembly as follows:

NOTE

The following steps are not applicable unless overtravel coupling assembly was disassembled per paragraph 4, this WP.

(1) Insert compression spring (12) and overtravel coupling ball assembly (13) into overtravel coupling base (11).

(2) Install overtravel coupling retainer (14) onto overtravel coupling base (11). Torque to 100 − 120 lb in. and lockwire. (QA)

(3) Mark location of coupling pinhole on plunger assembly for later reference. Install plunger assembly in a suitable fixture which will not damage surface.

(4) Insert overtravel coupling assembly and torque to 100 − 120 lb in. (QA)

NOTE

If hole marking in step (3) is within 10° of alignment with holes in plunger, drill a new hole through both details. Locate new hole approximately 60° from existing hole, and 0.224 − 0.244 in. from plunger and coupling splitline. If coupling base has previously been drilled for pins a total of three times, it must be replaced.

(5) Drill a 0.094 − 0.097 in. diameter hole into base in alignment with pin hole in plunger assembly (16).

(6) Drive or press pin (17) into the drilled hole, leaving each end of pin an equal depth below surface.

(7) Peen each hole sufficiently to secure pin using a 0.110 − 0.115 in. diameter punch.

(8) Install new insulation sleeving (20) per figure 4.

f. Install plunger assembly as follows:

CAUTION

The 11/64 in. diameter pin extending from end of plunger is selective fitted with switch and resistor assembly and coil and housing assembly. If one or more of these three parts are replaced with new part, proceed as follows:

(1) Insert plunger assembly in coil and housing assembly (1, figure 1).

(2) Place solenoid in a suitable fixture and attach dial indicator to register movement of plunger assembly as it is depressed.

CAUTION

Do not energize pin A.

(3) Connect pins B and C to test circuit as illustrated in figure 2.

NOTE

If travel between indicated points is less than 0.044 in., plunger assembly must be replaced.

(4) Slowly depress plunger assembly until it seats at end of stroke. While depressing, note length of travel from point where pilot lamp lights to seated position. Travel between indicated points should be 0.058−0.044 in.

NOTE

End of 11/64 in. diameter pin must be perpendicular to centerline within 0.003 in. FIR. Remove sharp edge within 0.020 in. radius.

(5) Remove plunger assembly from solenoid, and by machining or grinding reduce length of the 11/64 in. diameter pin by the same amount as the distance between indicated points minus 0.055 in.

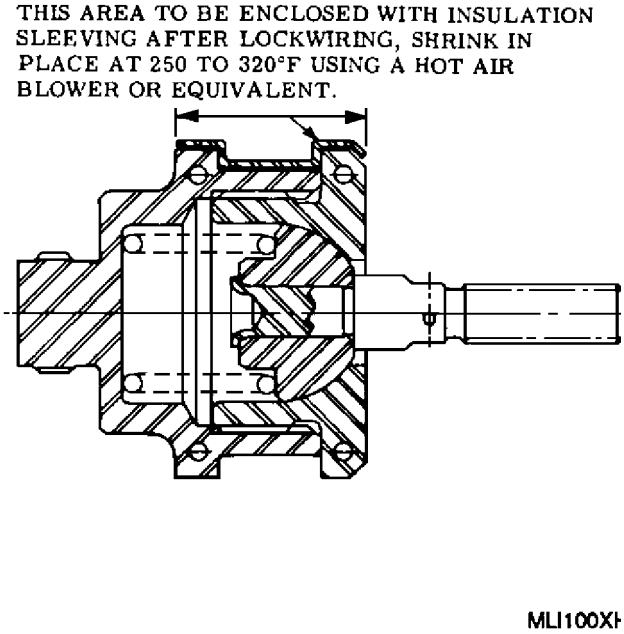

Figure 4. Installation of Insulation Sleeving on Overtravel Coupling Assembly

10. ELECTRICAL FEATHER SOLENOID ASSEMBLY − TESTING.

Support Equipment Required

Part No./Type Designation	Nomenclature
0−30 scale	DC Voltmeter
500 volt	Megger
Output 20 to 29 volts DC, minimum capacity 35 amperes	Power Source
——	Dial indicator Wheatstone bridge or equivalent

a. The following equipment is necessary for testing the electrical feather solenoid:

(1) Power source. Output 20−29 volts DC, minimum capacity 35 amperes.

(2) 500 volt megger.

(3) DC voltmeter, scale 0−30.

(4) Wheatstone bridge or equivalent.

CAUTION

Solenoid temperature should be approximately 72°F (22°C) during operational tests.

b. Perform operational test as follows:

(1) Mount solenoid in suitable fixture which will Supply 25 pounds spring load when plunger is extended 0.440 in. from energized or seated position and no more than 27 pounds spring load when plunger is energized or seated. A stop should be provided to hold plunger 0.440 in. from energized or seated position when spring load is applied.

(2) Connect solenoid to power source and apply 20 volts DC. Plunger should actuate the full 0.440 in. travel, seat and hold applied spring load. Procedure should be repeated when 29 volts DC is applied.

(3) Test overtravel coupling assembly per figure 2.

NOTE

Energizing of assembly by tests to establish conditions in step b (1) and (2) will raise coil resistance rapidly (approximately 0.10 ohms for every 30 seconds of energizing at 20 volts or higher). The referenced 0.97 − 1.15 ohms value is true only if coil has not been energized for at least one hour with ambient temperature of 70°F (21°C).

c. Perform electrical test as follows:

(1) With plunger in de−energized position (minimum of 0.440 in. from seated position).

(a) Resistance between pins A, B and C in receptacle and solenoid housing (ground) should be two megohms minimum at 500 volts DC for 10 seconds minimum.

(b) Resistance between pins A and C in receptacle should be 0.97 − 1.15 ohms when the coil (internal) temperature is still at 68−72°F (20−22°C).

(c) There should be no continuity between pins B and C in receptacle.

NOTE

Seated position must be maintained manually − not electrically.

(2) With plunger in energized (seated) position.

(a) Resistance between pins A and C in receptacle should be 38.9 − 41.1 ohms.

(b) There should be continuity of circuit between pins B and C in receptacle.

(3) With switch to A open.

(a) Set a dial indicator against end of plunger or overtravel assembly and manually move plunger toward energized (seated) position. At point where plunger seats, set dial indicator to zero; light in test circuit should be lit at this point. Slowly release plunger and note point where light goes out. This latter point should be 0.044 − 0.058 in. from seated position.

d. Install boot seal (18, figure 1) and garter spring (19).

DEPOT MAINTENANCE

CLEANING, INSPECTION, REPAIR, INSTALLATION, AND TEST REQUIREMENTS

FUEL AND AIR HOSE ASSEMBLIES

Reference Material

Aviation Hose and Tube Repair . . . . . NAVAIR 01−1A−20
Hose Assembly, Tetrafluroethylene, High Temperature
Medium Pressure, General Requirements . . . . . MIL−H−25579
Wire Braid Repair . . . . . MIL−S−6872

Alphabetical Index

Subject **Page No.**

Air Hose Assemblies 2
Cleaning 2
Inspection 3
Installation 3
Repair 3
Test Requirements 3
Fuel Hose Assemblies 2
Cleaning 2
Inspection 2
Installation 2
Repair 2
Test Requirements 2
Introduction 2

Record of Applicable Technical Directives

None

1. **INTRODUCTION.**

2. This work package (WP) provides the instructions for cleaning, inspection, repair, installation, and test requirements of the fuel and air hose assemblies used in the T56−A−427 turboprop engine.

3. **FUEL HOSE ASSEMBLIES.**

4. FUEL HOSE ASSEMBLIES − CLEANING.

Materials Required

Specification No./Part No.	Nomenclature
MIL−C−85043	Cloth, low lint
MIL−PRF−680, Type II	Solvent, dry cleaning

Dry Cleaning Solvent
MIL−PRF−680, Type II **3**

a. Do not immerse hose assemblies in any cleaning solvent.

b. Clean externally with a low lint cloth, dampened with MIL−PRF−680, type II dry cleaning solvent.

c. Flush hose assemblies internally with MIL−PRF−680, type II dry cleaning solvent and air dry.

5. FUEL HOSE ASSEMBLIES − INSPECTION.

a. Visually inspect both hose and fittings for damage. If any damage or deterioration is found, condemn fuel hose assembly.

6. FUEL HOSE ASSEMBLIES − REPAIR. Refer to NAVAIR 01−1A−20 for repair of fuel hose assemblies.

7. FUEL HOSE ASSEMBLIES − INSTALLATION.

a. Fuel hose assemblies shall not be installed with bend radii smaller than minimum bend radii specified in table 1. Hose shall be installed properly to ensure against chafing adjacent parts. Tighten coupling nuts so that hose will not be twisted.

8. FUEL HOSE ASSEMBLIES − TEST REQUIREMENTS.

a. Hydrostatically pressure test all fuel hoses per table 1 and MIL−H−25579.

Table 1. Pressure Test and Bend Radii Limits

Dash No. Size	Min Proof Pressure	Min Bend Radius
3	3000	2 in.
4	3000	2 in.
5	3000	2 in.
6	3000	4 in.
8	3000	4 5/8 in.
10	3000	5 1/2 in.
12	2000	6 1/2 in.
16	2500	7 3/8 in.
20	2000	11 in.
24	2000	13 1/4 in.

9. **AIR HOSE ASSEMBLIES.**

10. AIR HOSE ASSEMBLIES − CLEANING.

Materials Required

Specification No./Part No.	Nomenclature
MIL−C−85043	Cloth, low lint
MIL−PRF−680, Type II	Solvent, dry cleaning

Dry Cleaning Solvent
MIL−PRF−680, Type II **3**

a. Do not immerse hose assemblies in any cleaning solvent.

b. Clean externally with a low lint cloth, dampened with MIL−PRF−680, type II dry cleaning solvent.

c. Flush hose assemblies internally with MIL−PRF−680, type II dry cleaning solvent and air dry.

11. AIR HOSE ASSEMBLIES − INSPECTION.

a. Inspect wire braid covering for broken wires. Random breaks in wire braid are acceptable provided break in any one location does not exceed three wires per braid plait. Bends, kinks and minor separation on individual plaits are acceptable.

12. AIR HOSE ASSEMBLIES − REPAIR.

Materials Required

Specification No./Part No.	Nomenclature
QQ−S−571C	Solder, silver (composition AG 5.5, 2.5 or 1.5, Type AC, form W)

CAUTION

Use care during soldering to prevent damage to inner hose wall.

a. Repair all broken wires by trimming loose ends and soldering them to remaining plait per MIL−S−6872. Use Fed. Spec QQ−S−571C, Composition Ag 5.5, Ag 2.5 or Ag 1.5, Type AC, Form W solder.

b. Where major wire separation has occurred, solder wires together per step a. Not more than six soldered areas should be accepted per linear foot of braided length.

13. AIR HOSE ASSEMBLIES − INSTALLATION.

a. Reassemble hose assembly in a manner to prevent damaged area from rubbing against nearby objects when installed on engine.

14. AIR HOSE ASSEMBLIES − TEST REQUIREMENTS.

a. Pressure test air hose assemblies at 250 psi.

DEPOT MAINTENANCE

DISASSEMBLY, INSPECTION, REPAIR, ASSEMBLY, AND TESTING

DOUBLE PAPER ELEMENT FUEL FILTER ASSEMBLY

Reference Material

Magnetic Particle and Fluorescent Penetrant Inspection − Procedures . . . . . WP 017 00
Chemical Treatment for Aluminum Alloys, General Purpose Coating . . . . . AMS 2473

Alphabetical Index

Subject **Page No.**

Double Paper Element Fuel Filter Assembly 2
- Assembly 6
- Disassembly 2
- Inspection 2
- Nick and Gouge Repair 5
- Repair 2
- Safety Wire Clip Repair 6
- Scratch Repair 5
- Test Requirements 7
- Valve Seat Damage Repair 5

Introduction 2

Record of Applicable Technical Directives

None

1. **INTRODUCTION.**

2. This work package (WP) provides the instructions for disassembly, inspection, repair, assembly, and testing of the double paper element fuel filter assembly used on the T56−A−427 turboprop engine.

3. **DOUBLE PAPER ELEMENT FUEL FILTER ASSEMBLY.**

4. DOUBLE PAPER ELEMENT FUEL FILTER ASSEMBLY − DISASSEMBLY.

Support Equipment Required

Part No./Type Designation	Nomenclature
6796974	Pliers, removal and installation, low pressure fuel filter retaining ring
6796975	Depressor, spring, low pressure fuel filter element support

a. When elements require replacement, remove as follows:

(1) Remove lockwire and drain plug (5, figure 1) and preformed packing (6) from bar (7) and drain fuel. Discard preformed packing.

(2) Remove lockwire securing case (11) to head (1).

(3) Remove lockwire and loosen bar (7) until case and bar assembly (20) can be removed.

(4) Remove two filter elements (3) and element support plate (4) from case (11).

NOTE

Do not discard element support plate (4).

(5) Discard two filter elements (3).

(6) Remove and discard preformed packing (2) from head (1).

b. Disassemble case and bar assembly (20) as follows:

(1) Install 6796975 spring depressor (figure 2) on bar (7, figure 1) and tighten hand knob until element support spring (12) is depressed.

(2) Remove retaining ring (15) using 6796974 pliers (figure 3).

(3) Remove support washer (14, figure 1), element support plate (13), spring (12), and bar (7) from case (11).

(4) Remove and discard preformed packing (9 and 10) from bar.

(5) Remove and discard gasket (8) from bar.

c. Disassemble head assembly (1) as follows:

(1) Remove relief valve plug (19), preformed packing (18), relief valve spring (17), and relief valve piston(16).

(2) Remove vent plug (21) and preformed packing (22). Discard preformed packing.

5. DOUBLE PAPER ELEMENT FUEL FILTER ASSEMBLY − INSPECTION.

Support Equipment Required

Part No./Type Designation	Nomenclature
6799676 or equivalent	Tester, spring

a. Inspect double paper element fuel filter assembly. Refer to table 1.

6. DOUBLE PAPER ELEMENT FUEL FILTER ASSEMBLY − REPAIR.

a. Repair double paper element fuel filter assembly. Refer to Disposition column, table 1.

b. Replace parts in double paper element fuel filter assembly not within serviceable limits after repair.

Table 1. Double Paper Element Fuel Filter − Inspection and Repair

Condition	Serviceable Limits	Repairable Limits	Disposition
Dents in case:			
Affected area less than 1.00 in. (approximate dia.)	Cylinder: 0.037 in. max dent depth. Dome: 0.062 in. max dent depth.	Not repairable.	Condemn case exceeding serviceable limits.
Affected area 1.00 − 2.00 in. (approximate dia.)	Cylinder: 0.075 in max dent depth. Dome: 0.125 in. max dent depth.	Not repairable.	Condemn case exceeding serviceable limits.
Affected area greater than 2.00 in. (approximate dia.)	Cylinder: 0.115 in. max dent depth. Dome: 0.190 in. max dent depth.	Not repairable.	Condemn case exceeding serviceable limits.
Scratches in case (no apparent material removal such as would be caused by a knife edge or similar instrument).	Cylinder: 0.010 in. max depth. Dome: 0.030 in. max depth.	Exceeds serviceable limits.	Repair scratches in case per paragraph 7, this WP.
Valve springs and pistons:	Not serviceable.	Not repairable.	Condemn part exceeding serviceable limits.
Binding.			
Abnormal operation.	Not serviceable.	Not repairable.	Condemn part exceeding serviceable limits.
Excessive wear.	Not serviceable.	Not repairable.	Condemn part exceeding serviceable limits.
Valve seat damage.	Not serviceable.	Exceeds serviceable limits.	Repair valve seat damage per paragraph 8, this WP.
Nicks and gouges in case (material has been removed with burrs raised at edges such as would be caused by a screwdriver or other semi−sharp edge cutting into the canister).	Cylinder: 0.010 max depth, 0.5 in. max length. Dome: 0.030 max depth, 0.5 in. max length.	Exceeds serviceable limits.	Repair nicks and gouges in case per paragraph 9, this WP.
Element support spring damage.	Use 6799676 spring tester (figure 5) or equivalent and compress element support spring to a 1.1875 in. length. The spring pressure at this compressed length shall be 20−30 lb.	Not repairable.	Condemn element support spring exceeding serviceable limits.
Safety wire clip damage.	Not serviceable.	Exceeds serviceable limits.	Repair safety wire clipper paragraph 10, this WP.

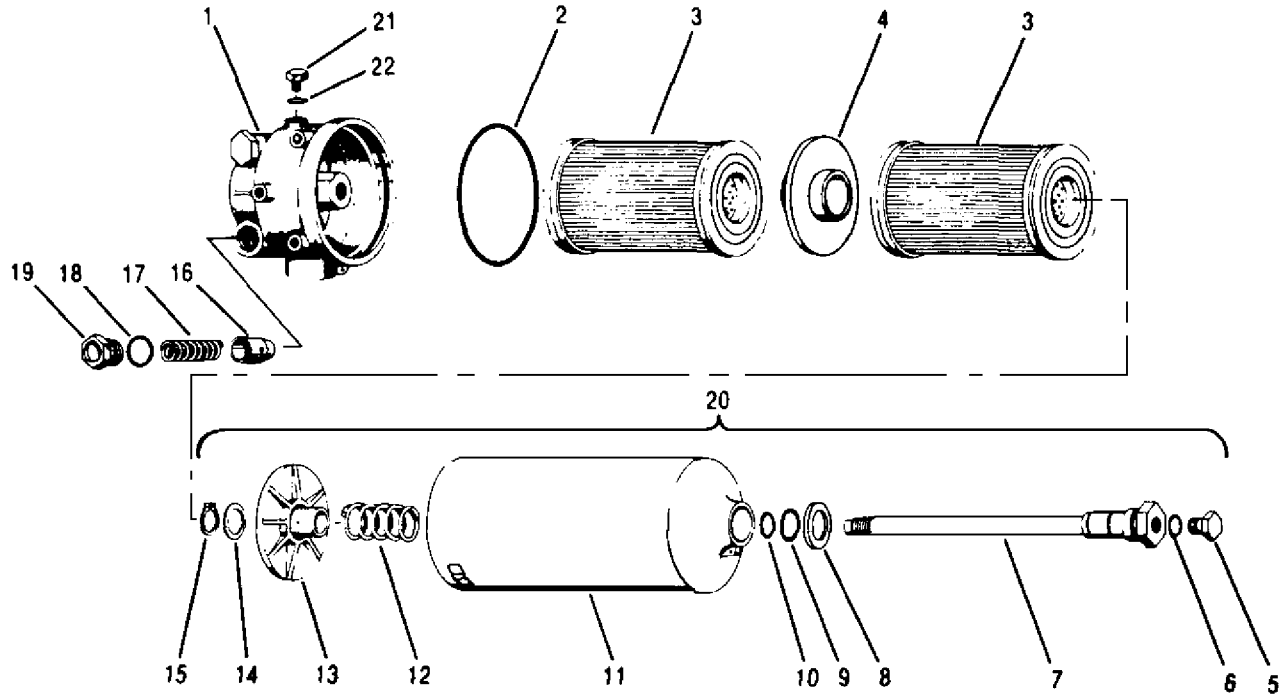

1.	Head Assembly	8.	Gasket	15.	Retaining Ring
2.	Preformed Packing	9.	Preformed Packing	16.	Relief Valve Piston (2)
3.	Element	10.	Preformed Packing	17.	Relief Valve Spring (2)
4.	Element Support Plate	11.	Case	18.	Preformed Packing (2)
5.	Drain Plug	12.	Element Support Spring	19.	Relief Valve Plug (2)
6.	Preformed Packing	13.	Element Support Plate	20.	Case and Bar Assembly
7.	Bar	14.	Support Washer	21.	Vent Plug
				22.	Preformed Packing

Figure 1. Disposable Paper Element Fuel Filter

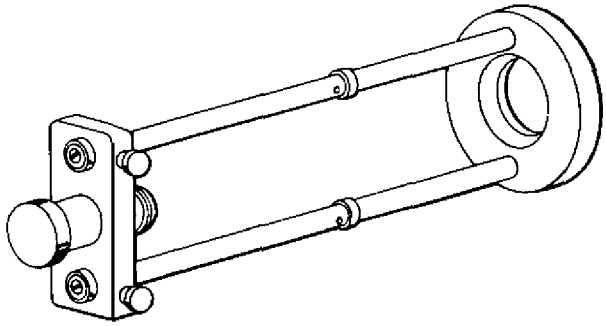

Figure 2. 6796975 Low Pressure Fuel Filter Element Support Spring Depressor

Figure 3. 6796974 Low Pressure Fuel Filter Retaining Ring Removal and Installation Pliers

7. DOUBLE PAPER ELEMENT FUEL FILTER ASSEMBLY − SCRATCH REPAIR.

Materials Required

Specification No./Part No.	Nomenclature
WC 100	Actithane Paint (CAGE 11931)
——	Alodine No. 1200

a. Scratches shall be blended out, but material removal shall not exceed the allowable scratch depth.

b. Fluorescent Penetrant Inspect (FPI) per WP 017 00 following removal of scratches. Any crack indications will be cause for replacement of the case.

c. After FPI, Alodine all reworked areas per AMS 2473.

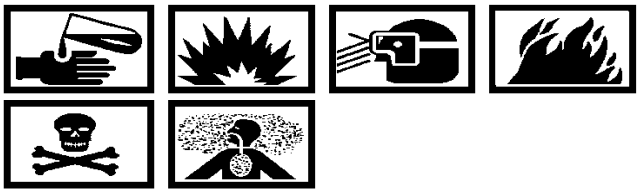

Actithane Paint WC 100 **11**

d. Coat external surface of case with Actithane paint WC 100. Do not coat 0.25 in. from the base of the case.

8. DOUBLE PAPER FUEL FILTER ASSEMBLY − VALVE SEAT DAMAGE REPAIR.

Support Equipment Required

Part No./Type Designation	Nomenclature
6797727	Reamer, fuel filter relief valve seat (60° included angle)
6797728	Reamer, fuel filter relief valve seat (flat bottom)
6797729	Reamer, fuel filter relief valve seat (120° included angle)
——	Gage, feeler (0.032 in.)
——	Gage, feeler (0.001 in.)

a. Inspect head assembly to determine type of valve seat shoulder.

b. If shoulder is flat, insert 6797728 reamer (figure 4), if shoulder is angular, insert 6797729 reamer (figure 4) until it bottoms against shoulder and thread locator into filter head.

c. Insert a 0.001 in. feeler gage between top of locator and stop nut. Tighten and lock stop nuts. Remove gage.

d. Cut a new face on shoulder until stop nut contacts top of locator.

e. Check to ensure surface has been cut all around. Reface if necessary.

f. Remove 6797728 or 6797729 reamer and install 6797727 reamer (figure 4). Be sure it bottoms against shoulder.

g. Insert a 0.032 in. feeler gage between top of locator and stop nut. Tighten lock stop nut. Remove gage.

h. Chamfer seat until nut contacts top of locator.

i. Check to ensure surface has been cut all around. Reface if necessary.

9. DOUBLE PAPER ELEMENT FUEL FILTER ASSEMBLY − NICK AND GOUGE REPAIR.

Materials Required

Specification No./Part No.	Nomenclature
WC 100	Actithane Paint (CAGE 11931)
——	Alodine No. 1200

a. Nicks or gouges within serviceable limits may be blended only to the depth of the nick or gouge, in no case to exceed 0.010 in. in the cylinder or 0.030 in. in the dome.

b. Fluorescent Penetrant Inspect (FPI) per WP 017 00 following removal of nicks and gouges. Any crack indications will be cause for replacement of the case.

c. After FPI, Alodine all reworked areas per AMS 2473.

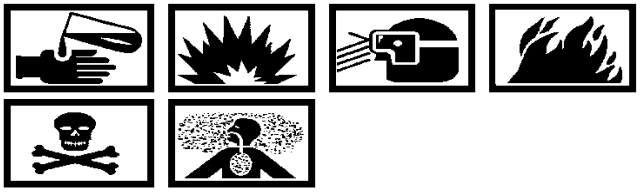

Actithane Paint WC 100 **11**

d. Coat external surface of case with Actithane paint WC 100. Do not coat 0.25 in. from the base of the case.

10. DOUBLE PAPER ELEMENT FUEL FILTER ASSEMBLY − SAFETY WIRE CLIP REPAIR.

CAUTION

Use care to avoid damage to case wall. Reworked area shall have a minimum thickness of 0.060 in.

a. Grind or stone off damaged lockwire clip smooth and flush with parent metal.

b. Locally manufacture clip and spot weld in adjacent location.

11. DOUBLE PAPER ELEMENT FUEL FILTER ASSEMBLY − ASSEMBLY.

Support Equipment Required

Part No./Type Designation	Nomenclature
6796974	Pliers, removal and installation, low pressure fuel filter retaining ring
6796975	Depressor, spring, low pressure fuel filter element support

Materials Required

Specification No./Part No.	Nomenclature
MIL−PRF−6081, grade 1010	Oil, lubricating
MS29512−10	Packing, preformed
MS29512−2	Packing, preformed
MS29513−113	Packing, preformed
MS29513−116	Packing, preformed
30865	Gasket
6808303	Element, filter

NOTE

Double paper element fuel filter assembly will not be completely assembled until all test requirements per paragraph 12, this WP, have been met.

a. Assemble head assembly (1, figure 1) as follows:

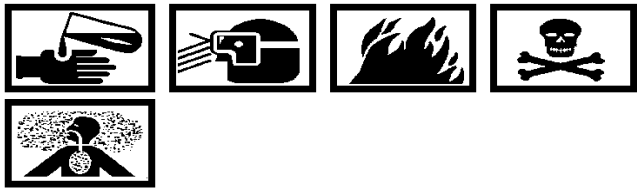

Lubricating Oil, MIL−PRF−6081, (Grade 1010) **7**

(1) Apply a light coat of MIL−PRF−6081, grade 1010, lubricating oil to the threads on vent plug (21) and preformed packing (22).

(2) Install preformed packing and vent plug on head assembly.

(3) Apply a light coat of MIL−PRF−6081, grade 1010 to preformed packing (18) and mating diameters and install relief valve piston (16), relief valve spring (17), preformed packing (18), and relief valve plug (19).

b. Assemble case and bar assembly (20) as follows:

(1) Install gasket (8) on bar (7).

(2) Apply a light coat of MIL−PRF−6081, grade 1010 lubricating oil to the bar threads and preformed packings (9 and 10).

(3) Install preformed packings on bar (7) and insert bar into case (11).

(4) Install element support spring (12), element support plate (13), and support washer (14) on bar.

(5) Install 6796975 spring depressor (figure 2) on bar and tighten hand knob until element support spring is depressed sufficiently to allow installation of retaining ring (15, figure 1).

(6) Install retaining ring in the groove on the bar using 6796974 pliers (figure 3).

c. Test double paper element fuel filter assembly per paragraph 12, this WP, and complete final assembly.

12. DOUBLE PAPER ELEMENT FUEL FILTER ASSEMBLY − TEST REQUIREMENTS.

Support Equipment Required

Part No./Type Designation	Nomenclature
6799201	Fixture, pressure test, disposable paper element fuel filter
6799866	Stand, test, fuel accessories

Materials Required

Specification No./Part No.	Nomenclature
MIL−C−7024 Type II	Fluid, calibrating
MIL−PRF−6081, grade 1010	Oil, lubricating
MS20995C32	Lockwire
MS29512−6	Packing, preformed
MS29513−246	Packing, preformed

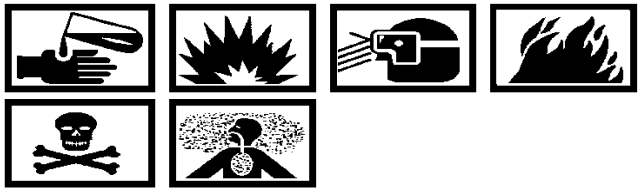

Calibrating Fluid MIL−C−7024, Type II 57

a. Use MIL−C−7024, type II calibrating fluid at 70−90° F (21−32°C) on 6799866 test stand (figure 6).

b. Replace filter paper elements with 6799201 filter assembly pressure test fixture (figure 7) and apply 2 psi inlet pressure. The leakage from outlet shall not exceed 20 cc per minute.

c. With fuel filter assembly pressure test fixture in place, valves shall open when inlet pressure is increased to 10 to 12 psi, and shall flow 100 pounds per hour (minimum) at 12.5 psi inlet pressure. At 16 psi, minimum outlet fluid flow shall be 2200 pounds per hour.

d. Remove 6799201 filter assembly pressure test fixture.

e. Install one element (3, figure 1), support plate (4), and second element (3) on bar (7).

Lubricating Oil, MIL−PRF−6081, (Grade 1010) 7

f. Apply a light coat of MIL−PRF−6081, grade 1010, lubricating oil to preformed packing and mating diameters and install preformed packing (2) in head (1).

NOTE

Assemble case to head so that lockwire will prevent case from turning counterclockwise (viewed from head).

g. Install case to head. Do not lockwire at this time.

h. Secure case and bar assembly (20) to head (1) by turning bar (7). Torque bar to 200−225 lb. in. (QA)

i. Install new preformed packing (6) on drain plug (5) and install plug in bar (7). Torque to 80−120 lb. in. (QA) Do not lockwire at this time.

j. Apply 140 to 150 psi pressure to inlet for at least two minutes with outlet plugged. There shall be no external leakage during this period.

k. Flow test fluid at the rate of 2500 pounds per hour through unit. Pressure drop across assembly shall not exceed 1 1/2 psi.

l. Lockwire case (11) to head assembly (1). (QA)

m. Lockwire plug (5) to bar (7). (QA)

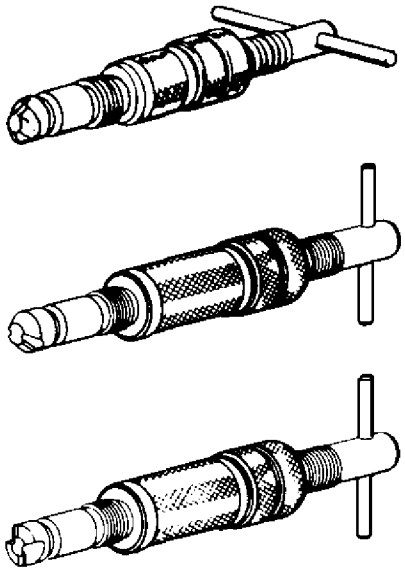

Figure 4. 6797727, 6797728 and 6797729 Fuel Filter Relief Valve Seat Reamers

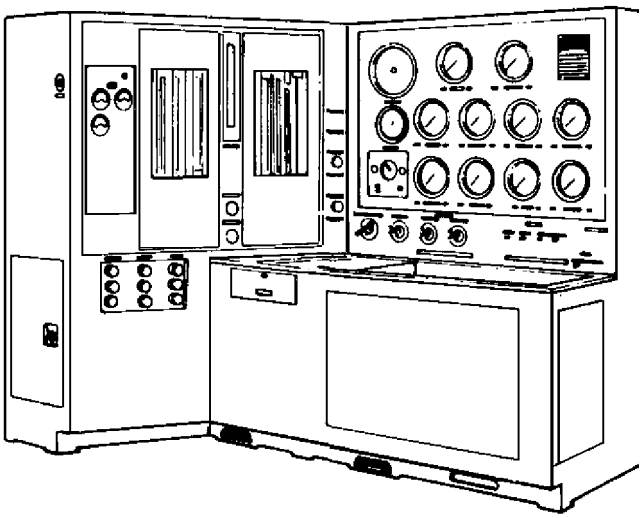

ZZT379X

Figure 6. 6799866 Test Stand

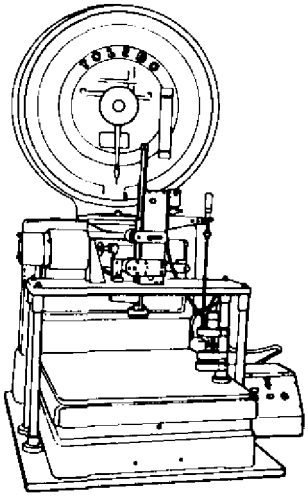

ZZT344XE

Figure 5. 6799676 Spring Tester

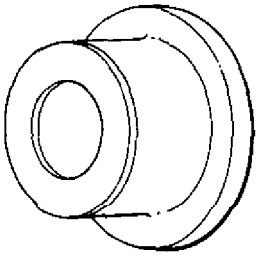

ZZT790XH

Figure 7. 6799201 Pressure Test Fixture

DEPOT MAINTENANCE

CLEANING, DISASSEMBLY, INSPECTION, REPAIR, ASSEMBLY, AND TESTING

SPEED SENSITIVE VALVE

Reference Material

Plating and Surface Treatment of Parts . . . . . WP 018 00
Maintenance of Aeronautical Antifriction Bearings for Organizational
Intermediate, and Depot Maintenance Levels . . . . . NAVAIR 01−1A−503
Plating, Chromium, Hard Deposit . . . . . AMS 2406

Alphabetical Index

Subject **Page No.**

Introduction 2
Speed Sensitive Valve 2
Assembly 9
Cleaning 5
Disassembly 2
Inspection and Repair 6
Testing 11

Record of Applicable Technical Directives

None

1. **INTRODUCTION.**

2. This work package (WP) provides the instructions for disassembly, cleaning, inspection, repair, assembly, and testing of the speed sensitive valve used on the T56−A−427 turboprop engine.

3. **SPEED SENSITIVE VALVE.**

4. SPEED SENSITIVE VALVE − DISASSEMBLY.

Support Equipment Required

Part No./Type Designation	Nomenclature
6795871	Fixture assembly, speed calibration pin, flyweight carrier, speed sensitive valve
6795872	Fixture, installation and removal, flyweight carrier snap ring
6795873	Fixture, installation, roll−pin flyweight carrier, speed sensitive valve
6796249	Support, accessory drive bearing removal
6796589	Plate, puller, speed switch drive shaft bearing
6796590	Drift, speed switch drive shaft bearing
6796591	Holder, speed switch drive shaft assembly
6796592	Wrench, spanner, speed switch drive shaft bearing retaining nut
6799377	Puller, speed sensitive valve plug orifice

NOTE

Presence of a new part in applicable repair kit eliminates necessity of cleaning, inspection, or rework of equivalent used part removed from assembly being repaired. Removed parts in this category shall be administratively condemned.

a. Remove parts, using figure 1 as a guide and the following:

b. Remove screws (56, figure 1) and separate bearing cage (43) from flyweight housing (36).

c. Remove internal retaining ring (54), using 6795872 fixture (figure 2) snap ring guard (53, figure 1), preformed packing (49), flat washer (50) and compression spring (52).

d. Remove carrier flyweight shaft assembly (51) from bearing cage (43). Remove flat washer (50) and preformed packing (49) from speed sensitive valve shaftgear (45).

e. Remove internal retaining ring (55) from bearing cage (43).

f. Remove bearings (46) and speed sensitive valve shaftgear (45) from bearing cage (43).

g. Remove oil seal (44) from bearing cage (43).

h. Install speed sensitive valve shaftgear in 6796591 holder (figure 3). Bend tab on retaining key washer (47, figure 1) with a punch and hammer.

i. Remove spanner nut (48) and washer (47), using 6796592 spanner wrench (figure 4).

j. Install 6796249 support (figure 5) on an arbor press. Position 6796589 plate under bearing ring flange with 6796590 drift placed in speed sensitive valve shaftgear (45, figure 1), remove bearings (46).

CAUTION

All parts of the carrier flyweight−speed sensitive assembly (51, figure 1) shall be suitably identified when disassembled to ensure reassembly into their original position. Do not interchange the details of one carrier flyweight−speed sensitive assembly with those of another. This is to ensure a balanced assembly.

k. Using 6795871 fixture (figure 6) remove pins (22, figure 1), retaining spring plates (19 and 21), and spring (31), from carrier flyweight shaft (23).

NOTE

If valve seat (25, figure 1) and pin (26) are removed from valve arm (27), mark valve seat in such a manner as to ensure reassembly in same position.

l. Remove pin (20) and speed sensitive weight (24) using 6795873 fixture (figure 7).

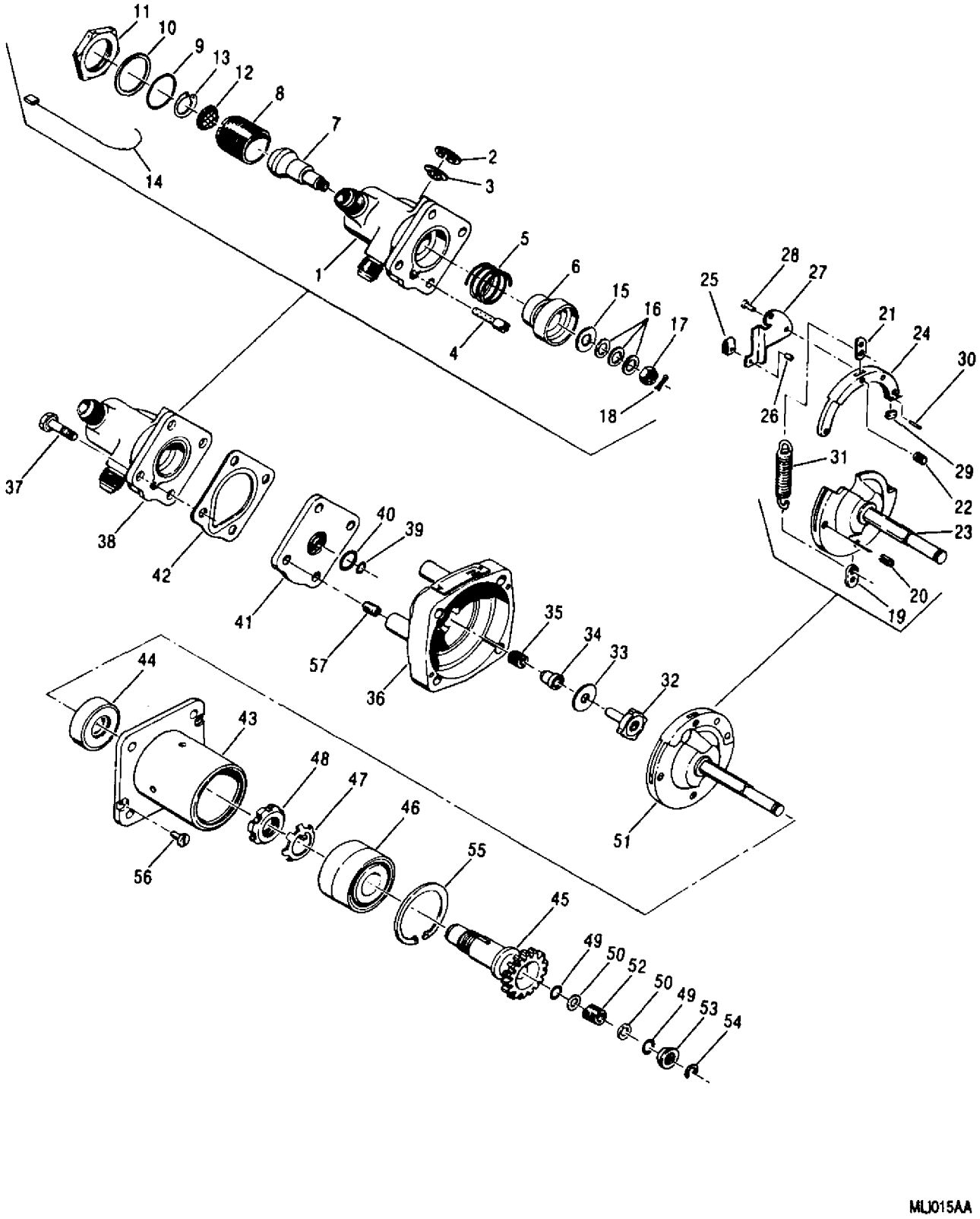

Figure 1. Speed Sensitive Valve (Sheet 1 of 2)

1. Valve Body
2. Internal Retainer Ring
3. Air Screen
4. Orifice Plug
5. Compression Helical Spring
6. Valve Actuating Piston
7. Poppet Valve
8. Adjustable Valve Seat
9. Preformed Packing (663700−14)
10. Washer
11. Nut
12. Air Screen
13. Internal Retainer Ring
14. Seal Wire
15. Washer
16. Washer
17. Nut
18. Cotter Pin
19. Retaining Spring Plate
20. Pin
21. Retaining Spring Plate
22. Pin
23. Carrier Flyweight Shaft
23. Carrier Flyweight Shaft
24. Speed Sensitive Weight
25. Valve Seat
26. Pin
27. Valve Arm
28. Rivet
29. Weight Guide
30. Pin
31. Spring
32. Face Seal
33. Washer
34. Spring Spacer
35. Spring
36. Flyweight Housing
37. Bolt
38. Valve Body Assembly
39. Preformed Packing (6825425)
40. Preformed Packing (AS3084−05)
41. Mounting Plate
42. Gasket (G4MAC58)
43. Bearing Cage
44. Oil Seal
45. Speed Sensitive Valve Shaftgear
46. Bearings
47. Retaining Key Washer
48. Retaining Spanner Nut
49. Preformed Packing (2) (AS3084−02)
50. Flat Washer (2)
51. Carrier Flyweight Speed Sensitive Assembly
52. Compression Spring
53. Snap Ring Guard
54. Internal Retaining Ring
55. Internal Retaining Ring
56. Screw
57. Insert

Figure 1. Speed Sensitive Valve (Sheet 2)

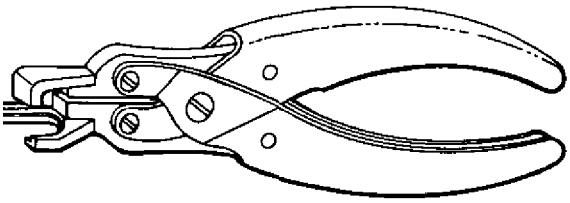

Figure 2. 6795872 Flyweight Carrier Snap Ring Installation and Removal Fixture

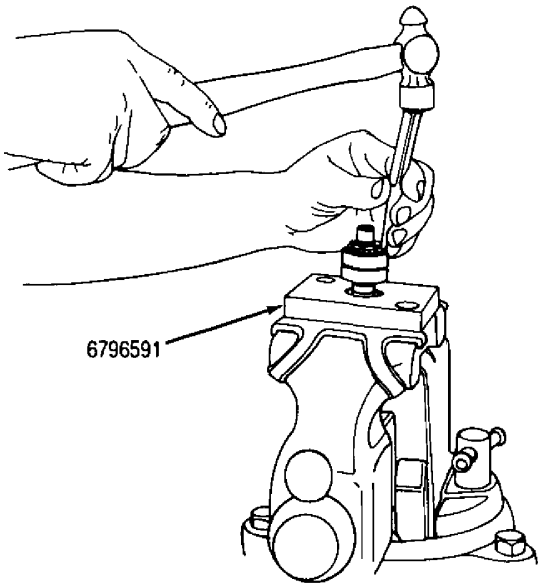

Figure 3. Bending Tab on Retaining Key Washer in 6796591 Holder

m. Remove face seal (32, figure 1), washer (33), spring spacer (34) and spring (35) from flyweight housing (36).

n. Remove bolts (37) and separate valve body assembly (38), gasket (42) and mounting plate (41) from flyweight housing (36).

o. Remove preformed packing (40) from mounting plate and preformed packing (39) from flyweight housing (36).

p. Remove seal wire (14), nut (11), washer (10), preformed packing (9), internal retaining ring (13), air screen (12) and adjustable valve seat (8) from valve body (1).

q. Remove cotter pin (18), nut (17), washers (15 and 16), poppet valve (7), valve actuating piston (6) and compression helical spring (5) from valve body (1).

r. Remove orifice plug (4) from valve body (1) using 6799377 puller (figure 8).

s. Remove internal retaining ring (2, figure 1) and air screen (3) from valve body (1).

5. SPEED SENSITIVE VALVE − CLEANING.

Materials Required

Specification No./Part No.	Nomenclature
TT−M−261	Methyl Ethyl Ketone
MIL−PRF−680, Type II	Solvent, Dry Cleaning

Dry Cleaning Solvent MIL−PRF−680, Type II **3**

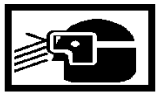

Compressed Air **56**

a. Clean all metallic parts except bearings and dry−film lubricated surfaces in MIL−PRF−680, type II dry cleaning solvent.

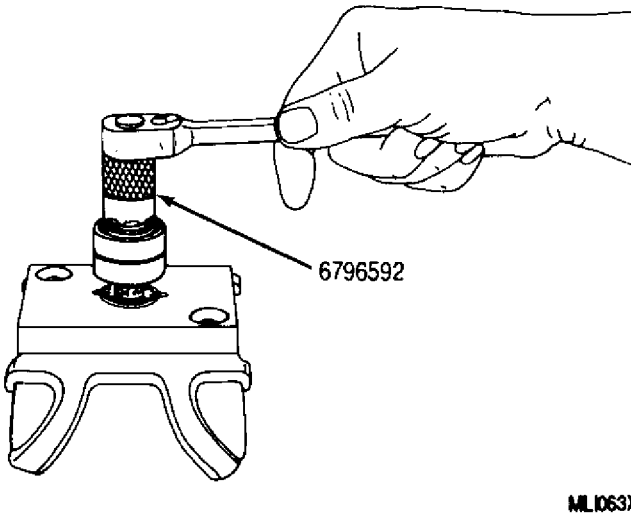

Figure 4. Removing Spanner Nut with 6796592 Spanner Wrench

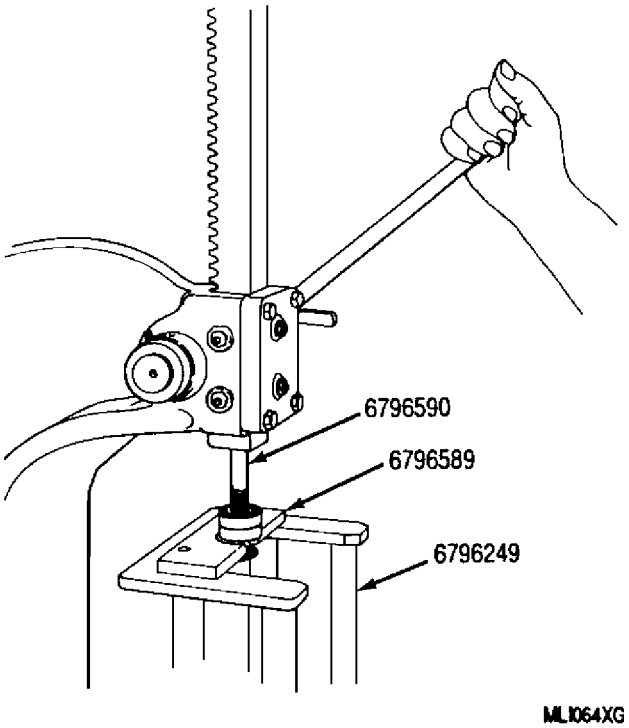

Figure 5. Removing Bearings from Speed Sensitive Valve Shaftgear

b. Clean all air passages with compressed air and make certain all passages are free and clean.

NOTE

Clean orifice plug (4, figure 1) and orifice bore in valve body (1). Remove all contamination from drilled air passages. If necessary, clean orifice throat with a 0.039 in. diameter drill or reamer.

Methyl Ethyl Ketone TT−M−261 27

c. Finish clean parts (except the face seat (32)) just before reassembly, using methyl ethyl ketone (TT−M−261, or equivalent).

6. SPEED SENSITIVE VALVE − INSPECTION AND REPAIR.

Support Equipment Required

Part No./Type Designation	Nomenclature
6799675 or equivalent	Tester, spring
——	Wrench, torque (0−50 lb in.)

Materials Required

Specification No./Part No.	Nomenclature
Electrofilm 4396	Electrofilm Coating A
No. 852−201	Resin, Teflon (clear finish)
No. 851−204	Resin, Teflon (one coat enamel)
Type 1001	Rod, Nylon 1/16 in.
MIL−PRF−680, Type II	Solvent, dry cleaning

a. Inspect bearings. (Refer to NAVAIR 01−1A−503.)

b. Inspect valve seating end of adjustable valve seat (8, figure 1). Valve seat must be a sharp comer with a finish of 32 RMS for 0.020 in. on adjacent surfaces.

c. Inspect poppet valve (7) for condition of seating surfaces. The seating surface finish shall have an arithmetical average of 32 RMS.

(1) When limits are exceeded, grind poppet valve seats. Remove only minimum amount of material to clean up wear ridge.

(2) Surface finish is 32 RMS minimum.

(3) Seat angle−to−shaft centerline is 45 degrees plus/minus 30 minutes.

(4) Radius at seat/shaft is 0.010 in. maximum. (Do not exceed 0.340 in. minimum diameter at hex end of seat.)

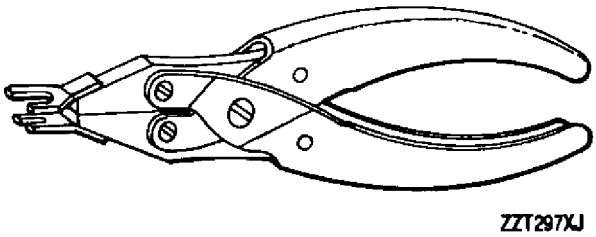

Figure 6. 6795871 Flyweight Carrier Speed Calibration Pin Fixture

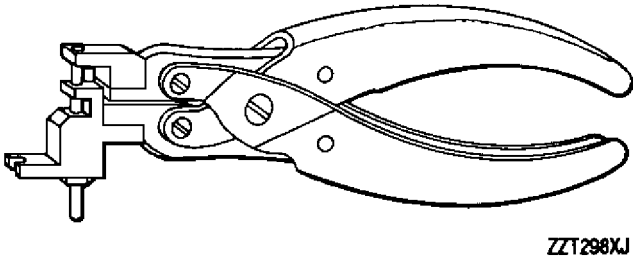

Figure 7. 6795873 Flyweight Carrier Roll−pin Installation Fixture

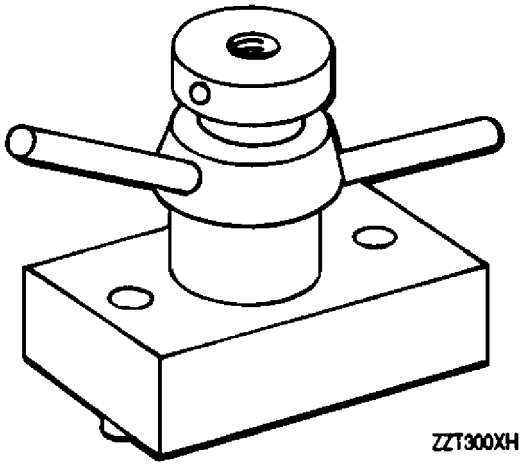

Figure 8. 6799377 Speed Sensitive Valve Plug Orifice Puller

d. Inspect valve seat of body (1). Seat shall be a sharp corner with a finish of 32 RMS for 0.020 in. on adjacent surfaces. Major bore shall not exceed 1.0003 in. and with a finish of 16 RMS. Minor bore of body shall not exceed 0.6873 in. and shall have a finish of 16 RMS.

e. Inspect valve actuating piston (6) for wear. If dry−film lubricant is worn through, reapply or replace piston.

(1) Major diameter shall not be less than 0.9982 in.

(2) Minor diameter shall not be less than 0.6855 in.

f. Dry film is applied 0.0001 − 0.0002 in. thick, using electrofilm coating A (Electrofilm 4396) or equivalent.

g. After applying dry−film lubricant, major diameter shall be 0.9984 − 0.9988 in. and minor diameter shall be 0.6857 − 0.6861 in.

h. Inspect weight guide (29) and pins (30) for wear. Replace weight guide (29) and pins (30) if wear is present.

i. Inspect valve seat (25) for wear. Maximum wear shall not exceed 0.002 in. When anvil of carrier flyweight shaft (23) is reworked, replace valve seat.

j. Inspect anvil on carrier flyweight shaft (23) for wear.

k. Maximum wear shall not exceed 0.005 in. Refer to figure 9 for repair.

l. Inspect carrier flyweight shaft for loose nylon plugs (figure 9).

m. Looseness is permitted provided there is an interference between the orifice plug (4) and bore of the speed sensitive valve shaftgear (45).

n. When it is necessary to replace the orifice plug (4), use a 1/16 in. nylon rod, type 1001.

o. Inspect speed sensitive weight (24, figure 1) and carrier flyweight shaft (23) mating surfaces for wear of Teflon coating. If any metal shows through, recoat with Teflon as follows:

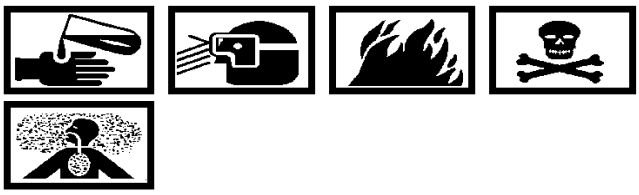

Dry Cleaning Solvent
MIL−PRF−680, Type II **3**

WARNING

Provide adequate ventilation, for any operation where temperatures of 600°F or above may be attained, due to the release of small quantities of toxic gases. Observe normal precautions associated with spray painting for spray application of these compounds.

(1) Mask off area to be Teflon coated. Clean surfaces by vapor blast or light sand blast, followed by degreasing or washing in MIL−PRF−680, type II dry cleaning solvent and air dry.

NOTE

Do not handle parts with bare hands or dirty gloves after cleaning. Keep time interval between cleaning and application of paint to a practicable minimum.

(2) Apply primary coating of Teflon resin, No. 851−204).

(3) Apply finish coating of Teflon resin (No. 852−201).

(4) Apply paint to part, preferably by spraying of a single coat, to a finish film thickness of approximately 0.7 mil. When spraying is impractical, brushing or dipping is permissible providing all requirements are met.

(5) Control application so that coating will be continuous, uniform, and free of bubbles, pin holes, or runs.

(6) Cure coated parts by air drying for not less than 30 minutes and then fused by oven baking at 700 − 750°F (371 − 399°C) for 15 minutes.

(7) When heavier films are required, additional finish coatings shall be applied only after each previous coat has been thoroughly dried and fused.

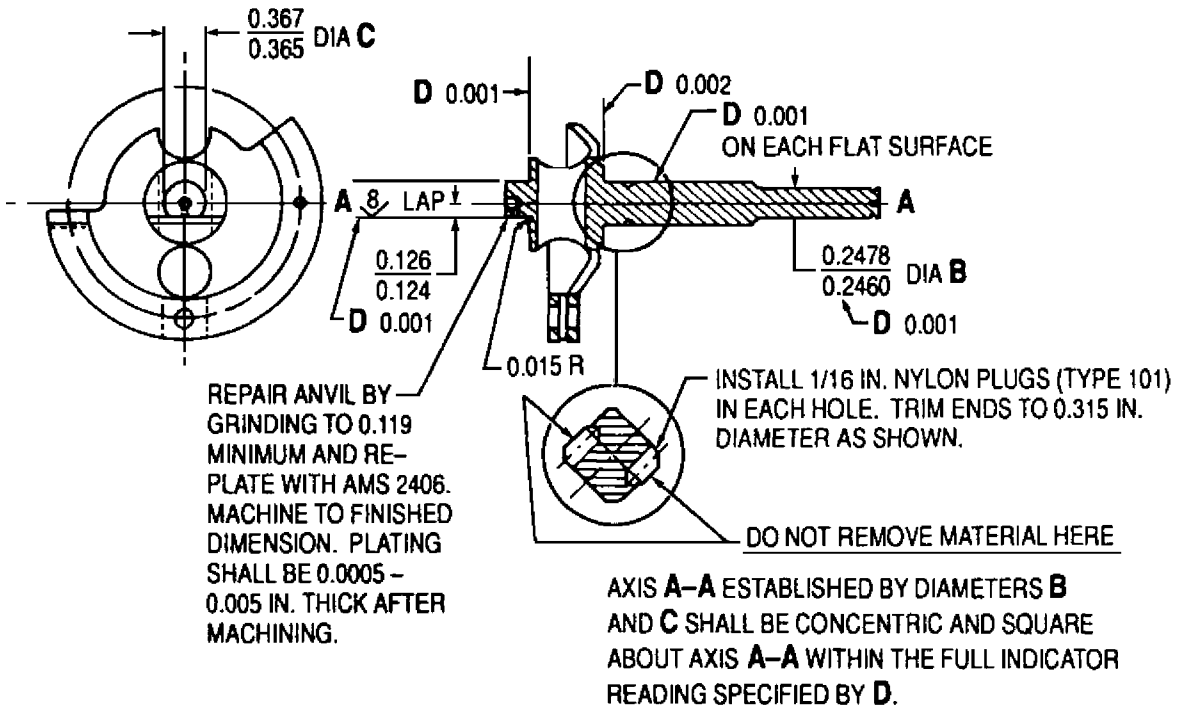

Figure 9. Carrier Flyweight Shaft Rework Limits

(8) Spotting may be done when baked film is damaged by abrasion caused by handling. Dress damaged area with sandpaper to a feather edge and apply and fuse as many 1.0 mil coats as necessary to build up film to its original thickness. After air drying, such spotted area may be fused by means of an open flame providing bright glowing spots in film being fused are avoided. Flame fusing shall be done under a hood or forced draft ventilation.

(9) Remove mask in a manner to avoid damage to Teflon coating.

p. Inspect bearing parts. Refer to table 1.

Table 1. Bearing Inspection Wear Limits

Location	Min.	Max.
Bearing to shaftgear	0.0005T	0.0005L
Bearing to cage	0.0001T	0.0014L

q. Inspect face seal (32) for wear. Discard if wear exceeds 0.020 in.

r. Inspect speed sensitive valve shaftgear (45) for wear or grooving on end diameter (0.500 − 0.499 in.) that contacts oil seal (44).

(1) If depth of this wear is less than 0.001 in. the part is serviceable.

(2) If wear is between 0.001 − 0.0050 in., grind diameter as required to clean up wear. Heat treat, chrome plate (AMS 2406), and finish grind per WP 018 00.

(3) Thickness of plating shall not exceed 0.0050 in. after grinding. If wear exceeds 0.0050 in., scrap the part.

s. Using 6799675 spring tester (figure 10) check springs as follows:

(1) Compress spring (35, figure 1) to a length of 0.250 in. Spring pressure at this compressed length shall be 1.25 − 1.50 lbs.

(2) Compress spring (52) to a length of 0.300 in. Spring pressure at this compressed length shall be 11.7 −14.3 lbs.

(3) Spring (31), part No. 6819284, shall support 18 −19 lbs at 1.440 in. length. Extension spring (31), part No. 6889841, shall support 16.75 − 17.75 lbs at 1.3900 in. length.

(4) Compress compression helical spring (5) to a length of 0.156 in. The spring pressure at this compressed length shall be 0.45 − 0.55 lbs.

7. SPEED SENSITIVE VALVE − ASSEMBLY.

Support Equipment Required

Part No./Type Designation	Nomenclature
23002984	Drift, seal installation, speed sensitive valve drive shaft
281184	Wrench, spanner
6795871	Fixture, assembly, speed calibration pin, flyweight carrier. speed sensitive valve
6795872	Fixture, installation and removal, flyweight carrier snap ring
6795873	Fixture, installation, roll−pin, flyweight carrier, speed sensitive valve
6796211	Installation Plate, accessories bearings
6796588	Expander, drive shaft seal
6796590	Drift, speed switch drive shaft bearing
6796591	Holder, speed switch drive shaft assembly
6796592	Wrench, spanner, speed switch drive shaft bearing retaining nut
——	Wrench, torque (0−100 lb in.)

Materials Required

Specification No./Part No.	Nomenclature
AS3084−02	Packing, preformed (2)
AS3084−05	Packing, preformed
G4MAC58	Gasket
MIL−PRF−23699	Oil, lubricating
TT−A−580D	Antiseize compound
663700−14	Packing, preformed
6825425	Packing, preformed

a. Assemble valve, using figure 1 as a guide and the following:

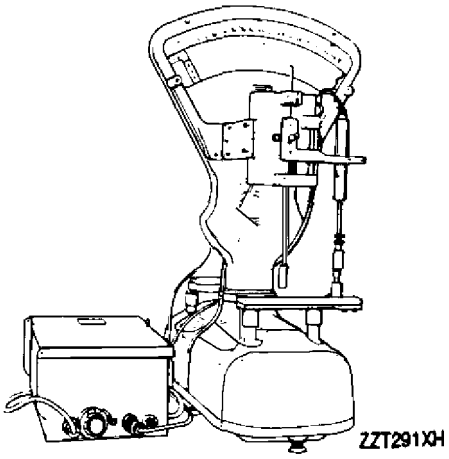

Figure 10. 6799675 Spring Tester

CAUTION

These bearings are manufactured as a matched set. Both bearings must have a set serial number with the same base number.

b. Press bearings (46) on shaft of speed sensitive valve shaftgear (45), using 6796211 installation plate (figure 11) and 6796590 drift. Position bearings with trade marks facing front and rear of shaft.

Lubricating Oil, MIL−PRF−23699 2

c. Install retaining key washer (47) and apply TT−A−580D antiseize compound or MIL−PRF−23699 lubricating oil to threads of speed sensitive valve shaftgear. Install retaining spanner nut (48) on shaft, using 6796592 retaining nut spanner wrench and 6796591 holder. Torque nut to 40 − 70 lb in. (figure 12). (QA)

CAUTION

Install oil seal (44, figure 1) with garter spring towards valve assembly drive shaft−end. Top of seal is to be flush with bottom of 1.500 dia. counterbore in bearing cage.

d. Inspect outside diameter of oil seal (44), clean off rough or sharp spots with crocus cloth as required and then lubricate the outside diameter with MIL−PRF−23699 lubricating oil. Install oil seal in bearing cage (43) with 23002984 drift.

e. Insert speed sensitive valve shaftgear (45) and bearings (46) in bearing cage (43). Use 6796588 expander to expand oil seal for insertion of shaft. Insert internal retaining ring (55) in bearing cage. Face beveled side away from bearing (figure 13).

f. Check valve actuating piston (6, figure 1) in valve body (1) for free fit.

(1) Major diametrical clearance 0.0016 − 0.0021 in.

(2) Minor diametrical clearance 0.0013 − 0.0018 in.

g. Install poppet valve (7), compression helical spring (5), valve actuating piston (6), washers (15 and 16) and secure with nut (17). Torque nut to 25−35 lb in. and install cotter pin (18). Use washers to align slot in nut and hole in poppet valve. (QA)

h. Install orifice plug (4) in valve body (1). Use care to avoid damaging the orifice or orifice bore. Fit shall be a thumb press (0.0001T − 0.0007L in.).

i. Install air screen (3) and internal retaining ring (2) in valve body (1).

NOTE

Do not tighten nut (11) until adjustable valve seat (8) is positioned per testing.

j. Install air screen (12) and internal retaining ring (13) in adjustable valve seat (8). Install preformed packing (9), washer (10) and nut (11) on adjustable valve seat and install in valve body (1).

k. Assemble carrier flyweight speed sensitive assembly (51) as follows:

(1) Install weight guide (29) and pins (30), if removed at disassembly.

(2) Install valve seat (25) and pin (26) to valve arm (27) and assemble valve arm to speed sensitive weight (24), using rivets (28), if removed at disassembly.

(3) Install speed sensitive weight (24) to carrier flyweight shaft (23) and secure with pin (20), using 6795873 fixture. Check for free fall of weight prior to further assembly.

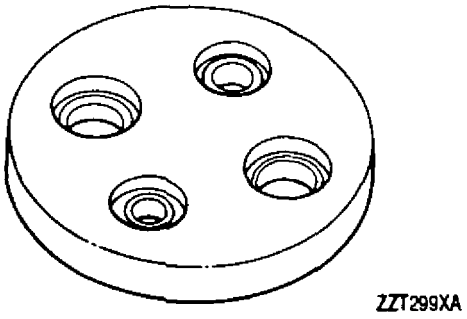

Figure 11. 6796211 Accessories Bearings Installation Plate

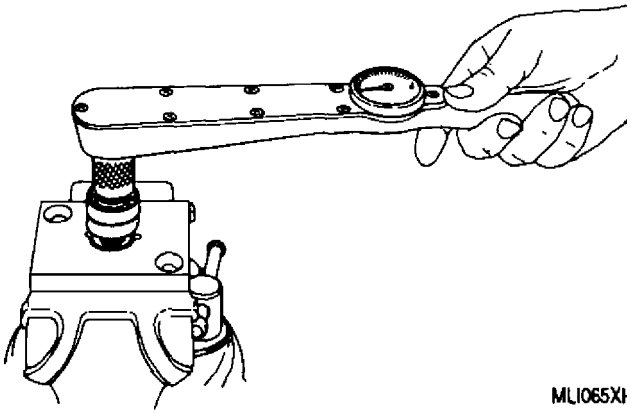

Figure 12. Installing the Speed Sensitive Valve Shaftgear Retaining Nut

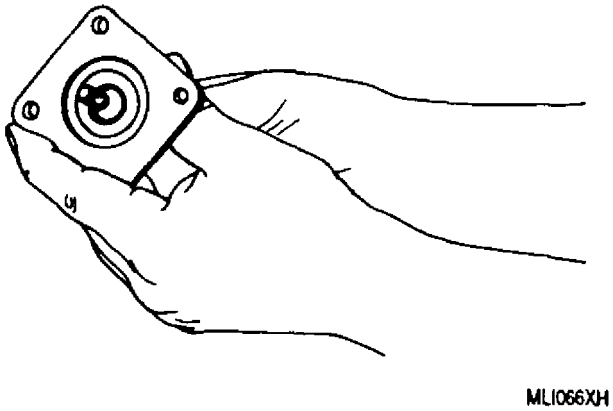

Figure 13. Installing the Speed Sensitive Valve Shaftgear and Bearing into the Bearing Cage

(4) Install retaining spring plates (19 and 21), pins (22) and spring (31) to carrier flyweight shaft (23) and speed sensitive weight (24), using 6795871 fixture and 6795873 fixture. Clearance of tang of speed sensitive weight and yoke of carrier flyweight shaft shall be 0.001 in. on each side.

(5) Maintain clearance of figure 14 after assembly of carrier flyweight shaft (23).

l. Install preformed packing (49, figure 1) and flat washer (50) in speed sensitive valve shaftgear (45).

m. Install carrier flyweight−speed sensitive assembly (51) into speed sensitive valve shaftgear (45).

n. Install compression spring (52), flat washer (50), preformed packing (49), snap ring guard (53), and internal retaining ring (54) on carrier flyweight−speed sensitive assembly.

o. Use 6795872 fixture to install retaining ring.

p. Install preformed packing (40) in mounting plate (41).

q. Install preformed packing (39) in flyweight housing (36).

r. Assemble valve body assembly (38), gasket (42) and mounting plate (41) to flyweight housing with bolts (37). Torque bolts to 35−40 lb in. (QA)

CAUTION

Washer (33) must have an interference fit when installed in flyweight housing (36).

s. Install spring (35), spring spacer (34), washer (33) and face seal (32) in flyweight housing (36).

t. Assemble flyweight housing (36) and bearing cage (43) using two screws (56).

u. Align flyweight housing with bearing cage using two bolts through stud holes.

v. Install seal wire (14) securing nut (11) after completion of testing.

8. SPEED SENSITIVE VALVE − TESTING. (figure 1)

Support Equipment Required

Part No./Type Designation	Nomenclature
281184	Wrench, spanner
——	Wrench, torque (0−300 lb in.)

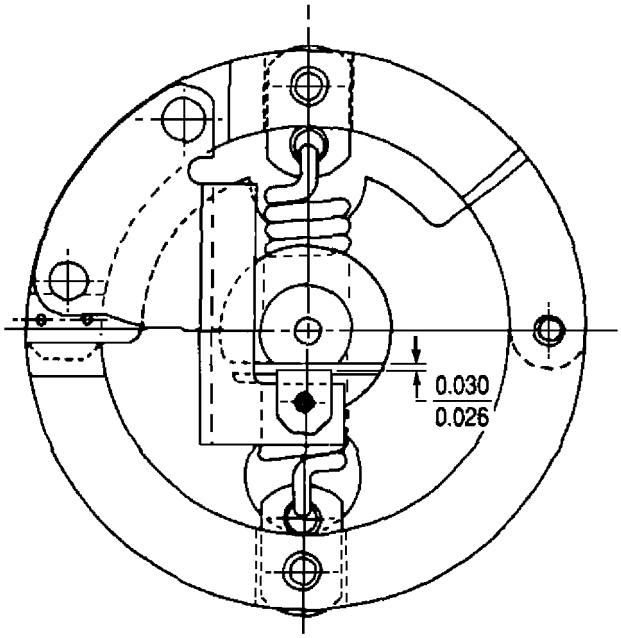

Figure 14. Carrier Flyweight Shaft Clearance Limit

a. Position adjustable valve seat (8, figure 1) on two−way poppet valve (7) as follows:

(1) Stabilize unit at 4500 rpm and apply an inlet air pressure of 95 − 105 psi at 65 − 95°F (18−35°C).

CAUTION

Do not turn adjustable valve seat while pressure is in valve.

(2) Position adjustable valve seat (8) so that contact is made with poppet valve (7).

(3) Reduce speed until poppet valve (7) closes and then turn adjustable valve seat 1/16 of a turn more. Hold this position, shut off air pressure, then tighten locknut (11) to 200 − 250 lb in. with 281184 spanner wrench.

b. Perform a calibration test with speed settings as follows:

(1) Acceleration 0−4500 rpm, (uniform acceleration of 400 ± 50 rpm per second) air flow through valve, “OUT” to “VENT,” 0 − 3940 ± 30 rpm, “IN” to “OUT,” 3940 ± 30 to 4500 rpm.

(2) Deceleration 4500 − 0 rpm, (uniform deceleration of 600 ± 100 rpm per second) air flow through valve, “IN” to “OUT,” 4500 − 3940 ± 30 rpm, “OUT” to “VENT,” 3940 ± 30 to 0 rpm.

(3) When unit does not open and close as specified, change the adjustment pins (22) as necessary. Select pins to increase or to decrease speed (figure 15).

c. Perform a leakage test with air at 95 − 105 psi applied at ”IN” port and control rotated at 3880 − 3870 rpm. Leakage through “IN” port shall not exceed 4.5 cfm of standard air. With air at 95 − 105 psi applied to “IN” port, “OUT” port sealed, and with control rotated at 3970 − 3980 rpm, leakage through “IN” port shall not exceed 4.5 cfm of standard air.

d. Control rotation speed shall be set by decelerating from approximately 4200 rpm.

NOTE

The “OUT” port tank shall not be connected during the flow check.

e. Perform a flow check with 10 psi air applied at “IN” port, and with control rotated at 3970 − 3980 rpm, flow of air through “OUT” port shall be at least 0.6 pound per minute. With 10 psi air applied at “OUT” port, and with control rotated at 3870 − 3880 rpm, flow of air through vent port shall be at least 1.0 pound per minute.

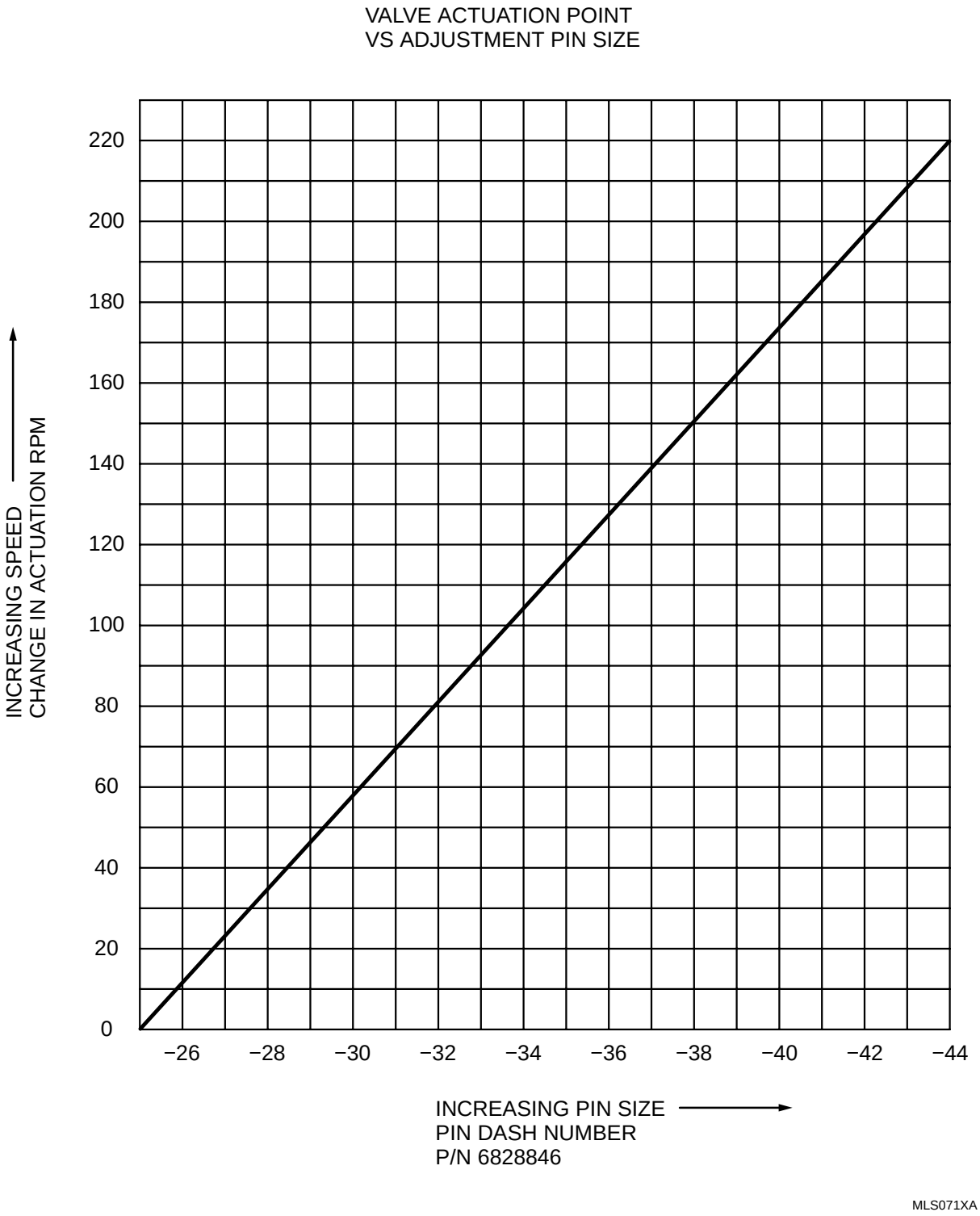

Figure 15. Valve Actuation Point vs Adjustment Pin Size

DEPOT MAINTENANCE

REMOVAL, DISASSEMBLY, CLEANING, INSPECTION, AND REPAIR

ANTI−FRICTION BEARINGS

Reference Material

Plating and Surface Treatment . . . . . WP 018 00
Maintenance of Aeronautical Antifriction Bearings . . . . . NAVAIR 01−1A−503
Plating, Copper . . . . . AMS 2418

Alphabetical Index

Subject **Page No.**

Anti−friction Bearings 3
Cleaning 7
Definitions 3
Demagnetization 7
Inspection 7
Bearing Cage (Separator) Inspection 8
Inspection Criteria 9
Planet Gear Bearing Inspection 8
Use of Scribe 7
Visual Inspection Procedures 7
Internal Clearance Limits 19
Compressor Extension Shaft Bearing 19
Compressor Front Bearing 19
Compressor Rear Bearing 19
Main Drive Gear Bearing 23
Pinion Gear Front Bearing 22
Pinion Gear Rear Bearing 22
Planet Gear and Bearing Assembly 21

Alphabetical Index (contd)

Subject **Page No.**

Propeller Shaft Bearing 20
Rear Carrier Bearing 21
Torquemeter Mid−Bearing 23
Turbine Front Bearing 20
Turbine Rear Bearing 20
Internal Diametral Clearance Measurement 23
Pinion Gear Front and Rear Bearing Inspection 7
Removal and Disassembly 6
Repair 9
Copper Plated Bearing Inner Ring Repair 9
Introduction 3
General 3

Record of Applicable Technical Directives

None

1. **INTRODUCTION.**

2. This work package (WP) provides the instructions for removal, disassembly, cleaning, inspection, and repair of the anti−friction bearings used in the T56−A−427 turboprop engine. For clarity of text, all tool illustrations appear in numeric order at the end of the WP.

3. **GENERAL.**

CAUTION

To prevent damage when removing bearings from shafts, pull or press on inner ring only.

4. General bearing handling and rework requirements of Maintenance of Aeronautical Antifriction Bearings NAVAIR 01−1A−503 shall apply unless otherwise specified herein.

5. Bearing components which have the same serial number shall be kept together as a matched assembly during disassembly, cleaning, and reassembly. These components shall not be intermixed with other bearing components.

6. **ANTI−FRICTION BEARINGS.**

7. ANTI−FRICTION BEARINGS − DEFINITIONS.

a. Bearings:

(1) Balls — Rotating spheres of a ball bearing assembly.

(2) Rollers — Rolling cylinders of a bearing assembly.

(3) Cage (Separator) — Retainer for bearing balls or rollers.

(4) Inner Raceway — Inner ring surface upon which the balls or rollers rotate.

(5) Inner Ring — Innermost member of a bearing assembly. The inner ring is sometimes split into two halves.

(6) Inner Diameter — Innermost surface of the inner ring.

(7) Bore — Innermost surface of the inner ring of a bearing assembly.

(8) Outer Raceway — Outer ring surface upon which balls or rollers rotate.

(9) Outer Ring — Outermost member of a bearing assembly.

(10) Outer Diameter — Outermost surface of the outer ring.

b. Surfaces (figure 1):

(1) Functional — All active surfaces of a bearing.

(a) Rolling elements — All surfaces (except roller corners for bearings under Grade C visual inspection).

(b) Rings — Raceway surfaces; Guide rib adjacent to raceway (roller bearings).

(c) Cage (Separator) — Entire pocket (except retention features); Piloting (land riding) surfaces.

(2) Nonfunctional — All surfaces other than those defined as functional including faces, outside diameters, inside diameters, slots, corners, flanges, etc.

c. Limits on size, spacing, and number of imperfections:

(1) Individual — Figures 2, 3, and 4 give the limit dimension for any one imperfection of the same type. This is the maximum acceptable size of the imperfection. (A lower size limit may apply if there is a cluster of imperfections of the same type.) If not specified as length or width, it is the largest dimension of the imperfection in any direction.

(2) Cluster — Figures 2, 3, and 4 also give the maximum limits on size and number applying to two or more imperfections of the same type, clearly separated, which can be contained within an area of the maximum size as specified. (Imperfections lying outside the area are treated as individual when they lie at least the specified distance apart from each other.)

d. Imperfections:

(1) Banding — Circumferential superficial grooves on balls or rollers and raceway surfaces caused by loading or debris during rotation. It is a wear condition but often has microspalling associated with it.

(2) Blistering (of plating) — Raised areas of plating caused by low adhesion between plating and base metal or overheating above the melting temperature of the plating material.

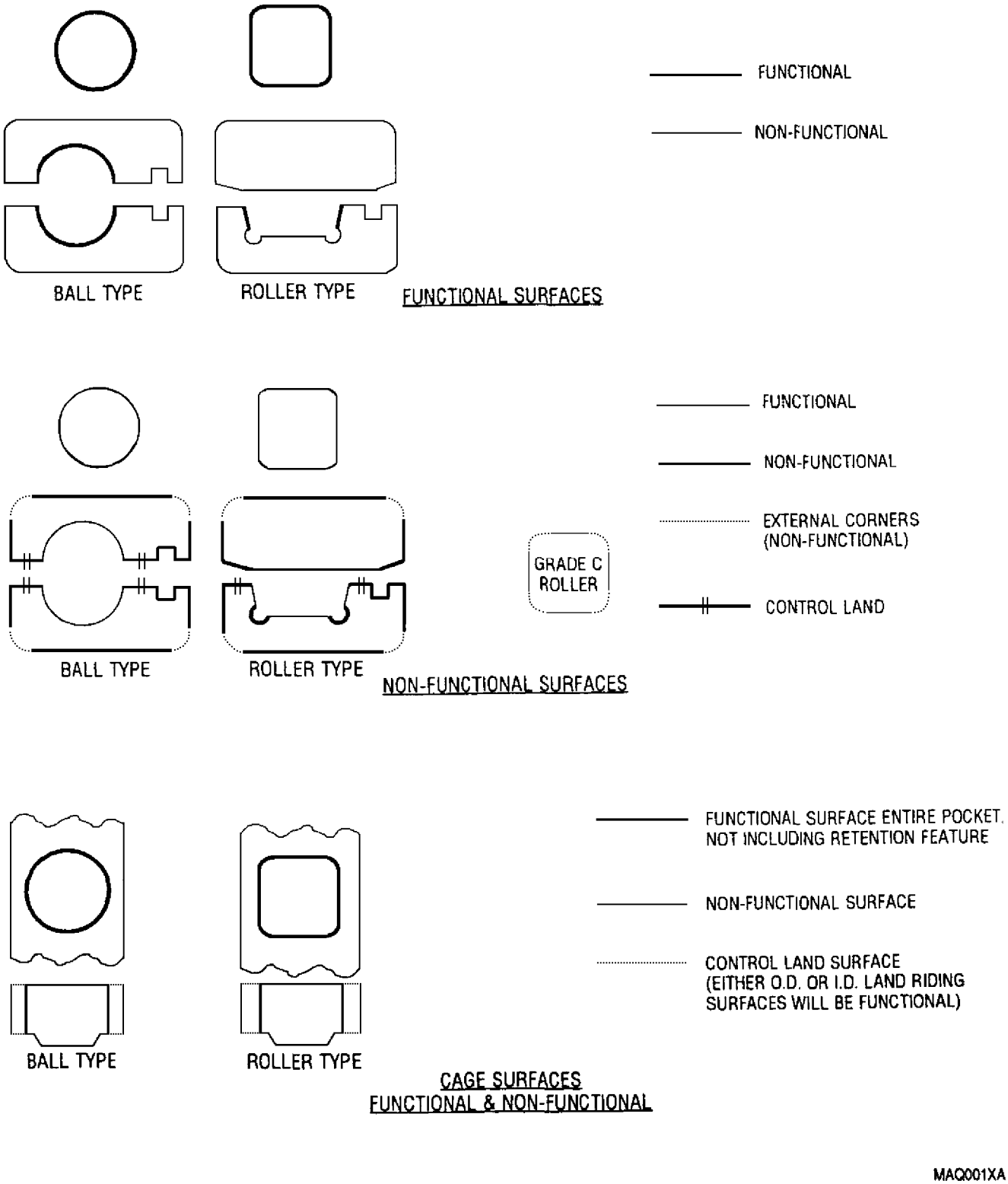

Figure 1. Bearing Surface Identification

(3) Brinelling:

(a) False brinelling — Surface marks on balls, rollers, and raceways that normally have a polished or satin finish appearance. These marks usually appear at the rolling element spacing on the raceways. The original surface finish lines are removed in these areas. This is a wear condition that occurs when the bearing is stationary in the presence of a vibratory load.

(b) True brinelling — Shallow, smooth indentations on balls, rollers, and raceways that have the original surface finish lines at the bottom of the depressions. Indentations in the surface have the same contour as the ball or roller. True brinelling is usually caused by a high load or impact load.

(4) Bulges (Bends) — Swelling or protrusions caused by deformation of the part. Intentional deformation required for rolling element retention is acceptable.

(5) Burnishing — Mechanical smoothing of a surface by rolling the rough places over during running. The contact area is sometimes discolored, but there is no actual wear. The cage will sometimes burnish the inner or outer ring land guiding surface due to marginal lubrication.

(6) Burrs — Flakes of metal or roughness (feather−edge) found at intersecting surfaces such as corners, drilled holes, milled slots, grooves, and identification stamps.

(7) Comet Head and Tail — See Tears, this paragraph.

(8) Corrosion (Rust) — Reddish−brown surface discoloration with or without pitting which appears to be an iron oxide (excluding heat treat discoloration) is “active” corrosion. All other corrosion discoloration or corrosion staining is “inactive” corrosion. The condition of corrosion pitting, whether single or in clusters, is to be considered under the definition for Pits, this paragraph.

(9) Cracks — A separation or rupture characterized by sharp edges and/or sharp changes in direction.

(10) Current Erosion — See Electrical Erosion, this paragraph.

(11) Dents — See Indentations, this paragraph.

(12) Electrical Arcing — See Electrical Erosion, this paragraph.

(13) Electrical Current Damage — See Electrical Erosion, this paragraph.

(14) Electrical Erosion — Damage to the raceway surfaces caused by the passage of electrical current. It is also referred to as Electrical Arcing, Electrical Pitting, Electrical Current Damage, Current Erosion, and Spark Erosion.

(a) Electrical Pitting — This imperfection differs from other pitting in that the surfaces appear melted under a microscope.

(b) Fluting — Periodically spaced depressions in the raceway surface in a transverse pattern producing a fluted or washboard appearance.

(15) Electrical Pitting — See Electrical Erosion, this paragraph.

(16) Flaking (of plating) — Pieces of metal plate breaking away from a plated surface.

(17) Fracture — A break through the entire thickness of the material.

(18) Fretting Corrosion — Rapid oxidation of metal surfaces caused by cyclic movement of closely fitted parts in the presence of oxygen. Surfaces are rusty and range from black (well bonded) to bright brick red (often loosely bonded or even free particles).

(19) Frosting — A slight dulling of the original shiny surface.

(20) Galling — Transfer of metal from one surface to another by welding and breakaway of particles during sliding friction contact. It is severe wear.

(21) Healing — Mechanical smoothing or blending of the raised edges of a scratch or other imperfection.

(22) Heat Discoloration— Discolorations due to the effects of heat in the presence of oxygen. Surface colors may range from light straw to dark grey depending on the environment temperature. The light colors of heat discoloration are very similar to the colors of lubrication and other staining and can easily be confused. (See Staining, this paragraph.) The difference is that heat discoloration is a change in the color of the metal itself while staining is a surface coating. Heat discoloration cannot be removed by light polishing.

(23) Heat Treat Scale — Loosely adherent surface oxides formed during heat treatment which can be removed with a hand probe.

(24) Inclusion — Foreign material (metallic or nonmetallic) enclosed in the bearing steel irregular in shape and dark colored in contrast to the normal metallic, shiny surface.

(25) Indentations (Dents, Nicks) — Shallow depressions in the surface where metal has been displaced but not removed. These can be caused by the pressure of a rolling element rolling over debris or from blows by hard objects. They generally have a smooth shape and are bright bottomed.

(26) Lap (Seam) — A surface imperfection appearing as a seam, caused by folding over hot metal or sharp corners and then rolling them into the surface, sometimes appearing as a crack.

(27) Microspalling — Shallow, very fine surface spalling often caused by an oil film too thin for the loading. Also found around other surface imperfections due to stress risers and/or oil film interruption.

(28) Nicks — See Indentations, this paragraph.

(29) Peeling (of plating) — Strips of plating lifting away from the base metal.

(30) Pits — Small, irregularly shaped cavities in the surface, with or without discoloration around the edges, from which material has been removed by corrosion or chemical attack. The bottoms of the cavities are usually dark. They do not include electrical pitting. (See Electrical Erosion.)

(31) Process Marks (Finish Marks) — Surface abrasions or imperfections caused by machining operations but which are not a part of the characteristic matte of these operations.

(32) Raised Metal — See Burrs, this paragraph.

(33) Roughness — A definite catch or jerkiness when holding one of the bearing rings and slowly rotating the other.

(34) Rust — See Corrosion, this paragraph.

(35) Scratch — Linear depressions caused by the movement of a sharp object or particle across the surface.

(36) Scoring — Deep, multiple scratches usually formed by sharp edges or foreign particles.

(37) Scuffing — A series of small abrasions caused by rubbing of two hard surfaces.

(38) Seam — See Lap, this paragraph.

(39) Skidding — Circumferential dulling of the raceway in an irregular streak or across the width of the raceway. Skidding occurs when the load on the balls or rollers is insufficient to keep them rolling in the raceways. Skidding can result in damage to the raceways or rolling elements that may include wear, scuffing, smearing, or galling.

(40) Smearing — Removal and transfer of metal from one surface to another as a result of sliding contact.

(41) Spalling — Breakdown of a functional surface due to fatigue in the form of irregularly shaped pits and flaking. The edges of the pits often have indications of cracking and further progression.

(42) Spark Erosion — See Electrical Erosion, this paragraph.

(43) Staining — Surface discolorations, with no broken surface, other than those associated with corrosion, rust, or heat treat scale. Must be removable by light polishing that will not adversely affect the surface. This includes lubrication staining and tarnishes. Stains do not need to be removed.

(44) Tears (Comet Head and Tail) — A deep, narrow scratch, sometimes with a hole at one end, parallel to the lay of the surface, resulting from material being pulled during a grinding or honing operation.

(45) Wear — Removal of material from a surface due to relative motion at that surface, usually due to fine debris or inadequate lubricant film.

8. ANTI−FRICTION BEARINGS − REMOVAL AND DISASSEMBLY.

a. Accessory drive ball bearings with pressed steel separators are non−separable. They may be inspected, visually and by feel, without removal from the gear or shaft.

b. All bearings which are removed from gears or shafts (because of damage or as a disassembly requirement) shall be removed by inner ring pulling. Even non−separable accessory drive ball bearings (which appear rough) should be removed by inner ring pulling.

c. In some instances it is not possible to remove the roller bearing from the accessory drive shaft by pulling on the outer side of the lip of the inner ring. Removal, therefore, may be facilitated by pulling against the inner side of the lip of the inner ring race, using the appropriate puller. Since this method requires priorremoval of rollers and separator from the bearing, use care to avoid dropping these components.

d. When a ball bearing is removed by outer ring pulling, the bearing is acceptable for continued use if it is acceptable by a visual inspection and by the use of a bearing noise detector. When a roller bearing is removed by outer ring pulling, the bearing is acceptable for continued use if the detail parts pass magnetic and visual inspection.

9. ANTI−FRICTION BEARINGS − DEMAGNET−IZATION.

a. Inspect bearing assemblies for magnetization. Magnetization shall not exceed 5 gauss pole strength.

NOTE

Since level of magnetization is sometimes difficult to determine with certainty, routine demagnetization is recommended for all assemblies and components.

b. Demagnetize bearing assemblies exceeding 5 gauss pole strength by passing through a demagnetizing coil close to its inner wall and removing at least five feet away before the current is broken.

10. ANTI−FRICTION BEARINGS − CLEANING.

a. Clean the bearings per NAVAIR 01−1A−503.

11. ANTI−FRICTION BEARINGS − INSPECTION.

12. Visual Inspection Procedures.

Support Equipment Required

Part No./Type Designation	Nomenclature
——	Glass, magnifying (7X)
——	Glass, magnifying (3X)

a. Table 1 defines the grade of visual inspection required for each bearing in the engine.

b. Visual inspection of functional surfaces shall be performed using maximum magnification per table 2. Visual inspection of nonfunctional surfaces does not require magnification.

c. Illumination at the surface to be inspected shall be no less than 100 ft−candles.

d. Higher magnification maybe used to determine the type and size of imperfections at the inspector's option. However, imperfections are subject to rejection only if visible at the stated magnification. 1X is defined as 16−18 in. from the surface.

13. ANTI−FRICTION BEARINGS − PINION GEAR FRONT AND REAR BEARING INSPECTION.

a. Visually inspect pinion gear front and rear bearings during disassembly as follows:

(1) Pinion gear journal and bearing shall have a snug fit when light hand pressure is applied to opposite end of gear shaft. Slight radial movement between pinion gear journal and inner or outer ring will be visually observed. A loose fit between pinion gear journal and bearing (inner and outer ring) requires replacement of pinion bearing and main drive gear.

(2) Noticeable pinion bearing roughness of rotation requires bearing and main drive gear replacement.

(3) Pinion bearing frozen to gear shaft or missing rollers requires replacement of pinion bearing and main drive gear.

14. Use of Scribe.

Support Equipment Required

Part No./Type Designation	Nomenclature
——	Scribe (0.030 in. tip radius)
——	Scribe (0.060 in. tip radius)
——	Scribe (0.080 in. tip radius)

a. A scribe of a designated tip radius shall be used to determine if certain imperfections are acceptable.

b. Refer to table 3 to determine the size of scribe to use when making inspections.

NOTE

Perpendicularity and "30 degrees from perpendicular" are as determined by eye and may be adjusted by the inspector to accommodate the size or configuration of the part.

Imperfections which cannot be felt do not count towards any spacing or quantity limits for those which can be felt.

c. When using the scribe, hold it 30 degrees from perpendicular to the surface in question, and guide it with the fingers and thumb. Do not firmly grasp the scribe or push it towards the surface. Allow the scribe to float between fingers and thumb, applying only the weight of the scribe against the surface. Guide the scribe in a direction perpendicular to the general lay of the imperfection. If the tip hesitates, or catches, at any one spot, the surface imperfection has been felt.

Table 1. Bearing Visual Inspection Grades.

Bearing Position	Visual Inspection Grade
Power Section Bearings:	
Extension Shaft	A
Front Compressor	A
Rear Compressor	A
Front Turbine	B
Rear Turbine	B
Accessory Gearbox Bearings:	
Side Gear	B
All Others	C
Torquemeter Bearings:	
Mid Torquemeter	A
Reduction Gearbox Bearings:	
Alternator	A
Hydraulic Pump	A
Prop Shaft Roller	B
Prop Shaft Ball	B
Planet Gear and Bearing	A
Rear Carrier	B
Main Drive Gear	A
Front Pinion	A
Rear Pinion	A
Starter Shaft	A
Tach Drive	A
Tach Idler	A
All Other Accessories	C

Table 2. Magnification Level Requirements for Each Visual Inspection Grade.

Rolling Element Diameter	Magnification Grade A	Grade B	Grade C
Less than 1/2 in.	7X	3X	1X
1/2 − 1 in.	3X	1X	1X
Greater than 1 in.	1X	1X	1X

Table 3. Scribe Size Requirements for Each Inspection Grade.

Rolling Element Diameter	Scribe Size Grade A	Grade B	Grade C
Less than 1/2 in.	0.030	0.030	0.060
1/2 − 1 in.	0.060	0.060	0.080
Greater than 1 in.	0.080	0.080	0.080

15. Planet Gear Bearing Inspection.

Materials Required

Specification No./Part No.	Nomenclature
MIL−PRF−6081, Grade 1010	Oil, lubricating
VV−L−800	Oil, lubricating

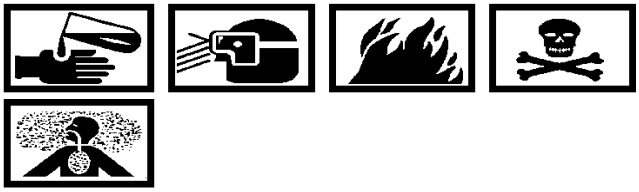

Lubricating Oil, MIL−PRF−6081, (Grade 1010) **7**

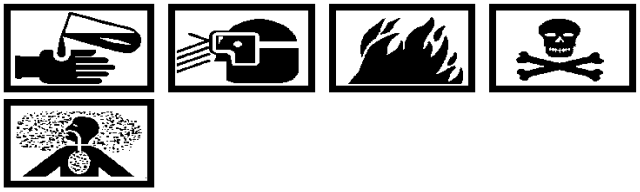

Preservative Oil VV−L−800 **66**

a. Planet gear and bearing assemblies are to be disassembled, demagnetized, and lightly oiled with lubricating oil (MIL−PRF−6081, Grade 1010) or preservative oil (VV−L−800) before inspection. Latest time code is to be marked on planet gear prior to inspection.

b. Identify roller sets as front and rear. Rollers shall not be intermixed during reassembly of the bearing.

c. Gears and journals free from spalling or other obvious defects, are to be reinspected per bearing criteria.

d. If the black oxide is worn, the part is serviceable if it meets all other inspection criteria.

e. A raceway surface treated with thin, dense, chrome (TDC) coating is acceptable with a polished area in the functional surface, but must still meet all other inspection criteria. If the raceway is worn through the TDC coating, the entire bearing shall be rejected.

16. Bearing Cage (Separator) Inspection.

a. A bearing assembly with the cage worn beyond limits or defective per figure 4 is serviceable if a new cage is used.

b. Cages with base metal exposed on cross bars and control surfaces may be stripped and silver plated per applicable specifications.

17. Inspection Criteria.

a. The maximum acceptable limits for visual imperfections are specified in the following figures:

Figure	Inspection Criteria
2	Functional Surfaces
3	Non−functional Surfaces
4	Cage Surfaces

b. Roller corners are nonfunctional surfaces for bearings under Grade C visual inspection or when the corner runout requirements are greater than 0.001 in. or are not specified.

c. Corners at the point of intersection with functional surfaces are functional.

d. Maximum imperfection sizes given in the figures refer to the largest surface dimension that can be measured in any direction, unless otherwise specified. The dimensions do not refer to depth unless depth is specifically called out.

e. All parts exceeding the limits of figures 2, 3, and 4 are not serviceable.

f. A non−serviceable part may be reworked by approved methods to bring the part back to serviceable limits. If, after rework, the part does not meet serviceable limits, the part shall be condemned.

18. ANTI−FRICTION BEARINGS − REPAIR.

a. For functional surfaces, rework is not permitted.

b. For nonfunctional surfaces, hand rework is permitted.

19. Copper Plated Bearing Inner Ring Repair.

a. Repair damaged copper plating on inner ring bore per step c.

b. Inspect inner ring for wear per Table 4. Repair worn copper plating on inner ring bore per step c.

c. Repair damaged or worn copper plating as follows:

(1) Strip old plating and buff or chemically clean any remaining fretting or corrosion.

(2) Copperplate the inner rings per AMS 2418.

(3) Inspect I.D. of inner rings per Table 5. Coating shall be smooth, adherent, and free of blisters.

Table 4. Maximum Serviceable Diameter of Copper Plated Bearing Inner Ring Bore Diameters.

Bearing	Maximum Serviceable Inner Ring Bore Diameter (In.)
Pinion Front	2.9522
Pinion Rear	2.1652
Compressor Front	2.3616
Compressor Rear	2.3616
Main Drive Gear	6.2990
Planet Rear Carrier	6.2990

Table 5. Bore Diameter and Plating Thickness Dimensions for Copper Plated Inner Rings.

Bearing	ID After Plating (In.)	Plating Thickness (In.)
Pinion Front	2.9522−2.9512	0.0003−0.0005
Pinion Rear	2.1652−2.1647	0.0001−0.0002
Compressor Front	2.3616−2.3609	0.0003−0.0005
Compressor Rear	2.3616−2.3609	0.0003−0.0005
Main Drive Gear	6.2990−6.2982	0.0001−0.0003
Rear Carrier	6.2990−6.2982	0.0001−0.0003

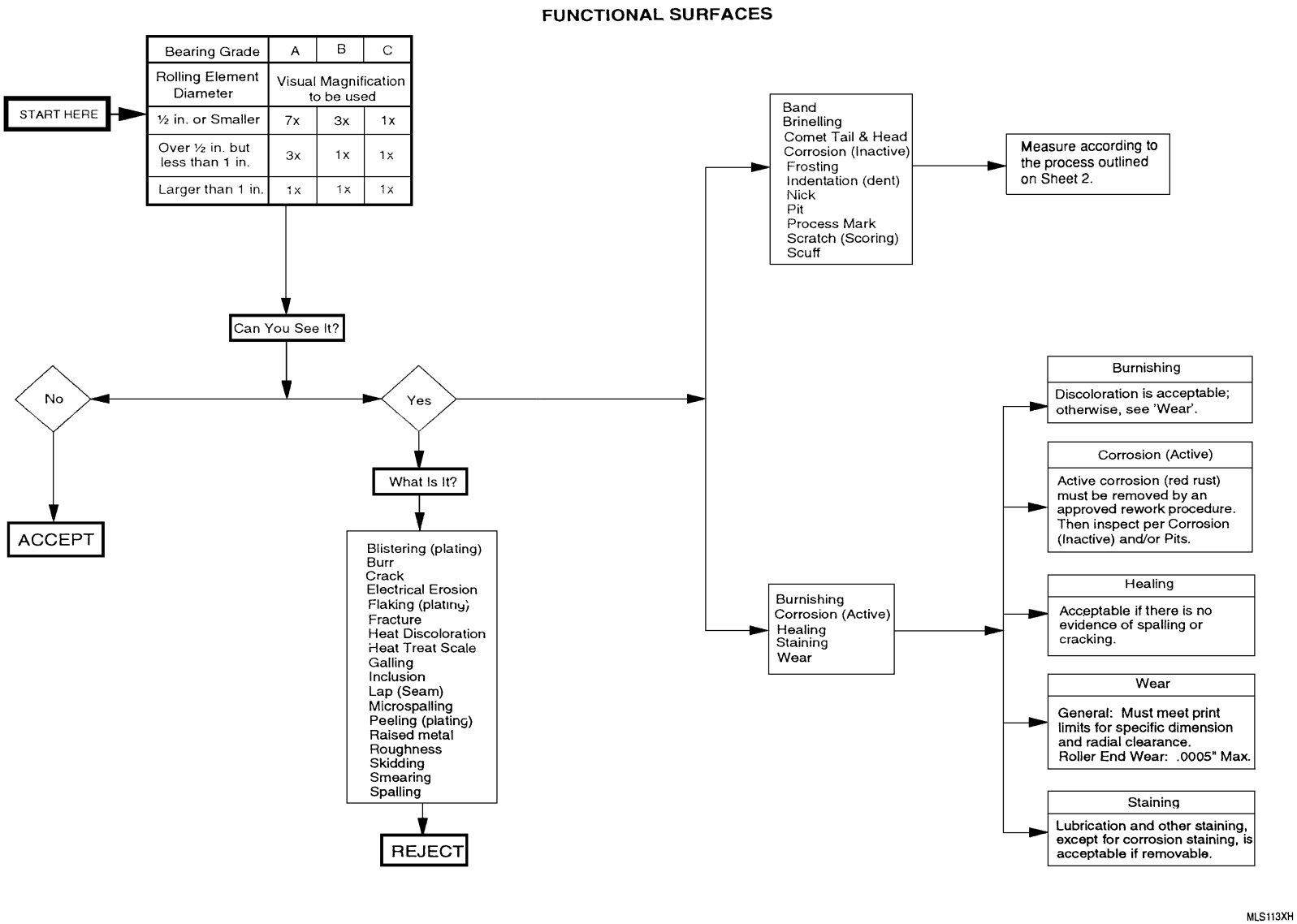

Figure 2. Bearing Functional Surfaces Insepction (Sheet 1 of 2)

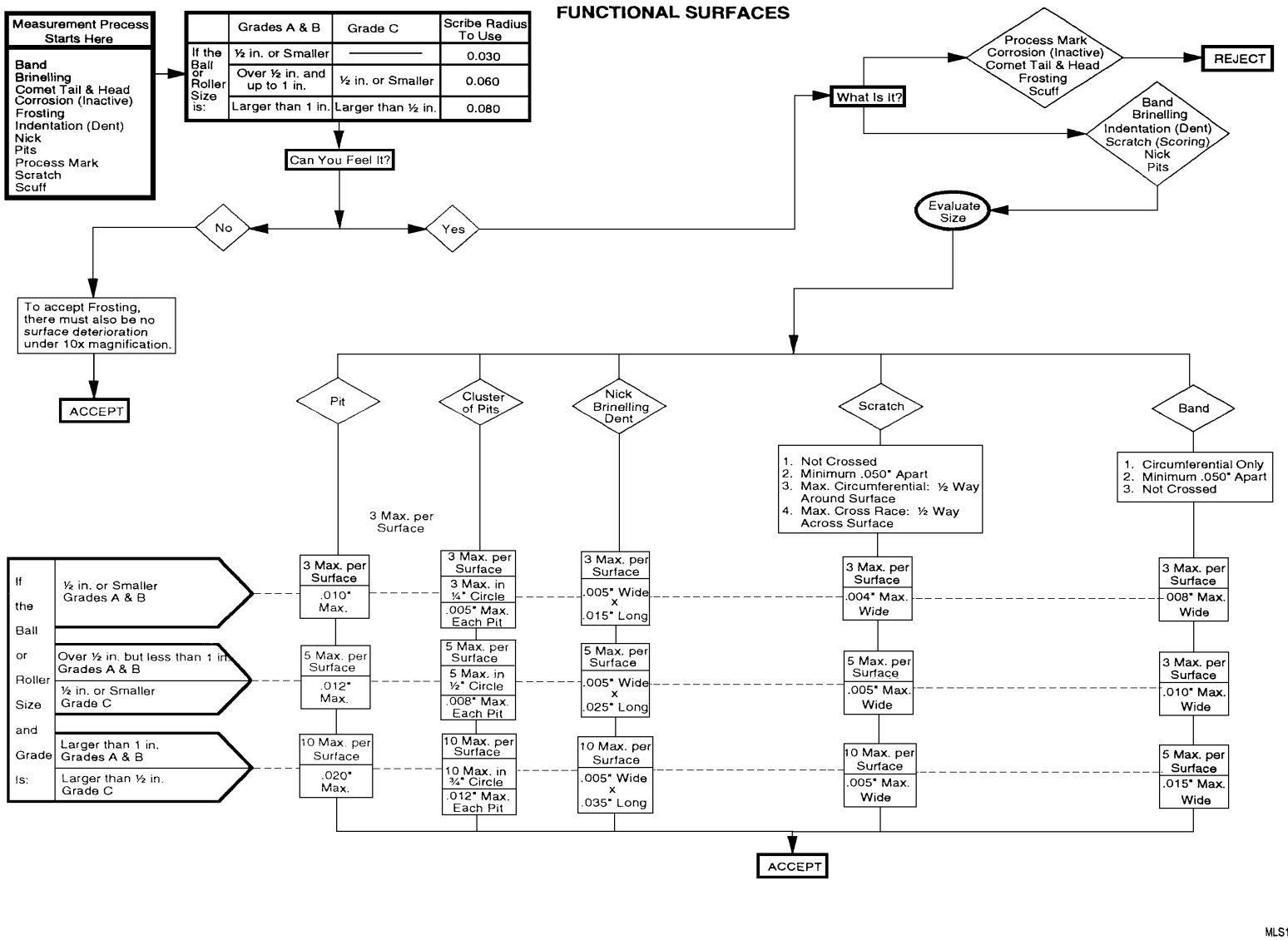

Figure 2. Bearing Functional Surfaces Inspection (Sheet 2)

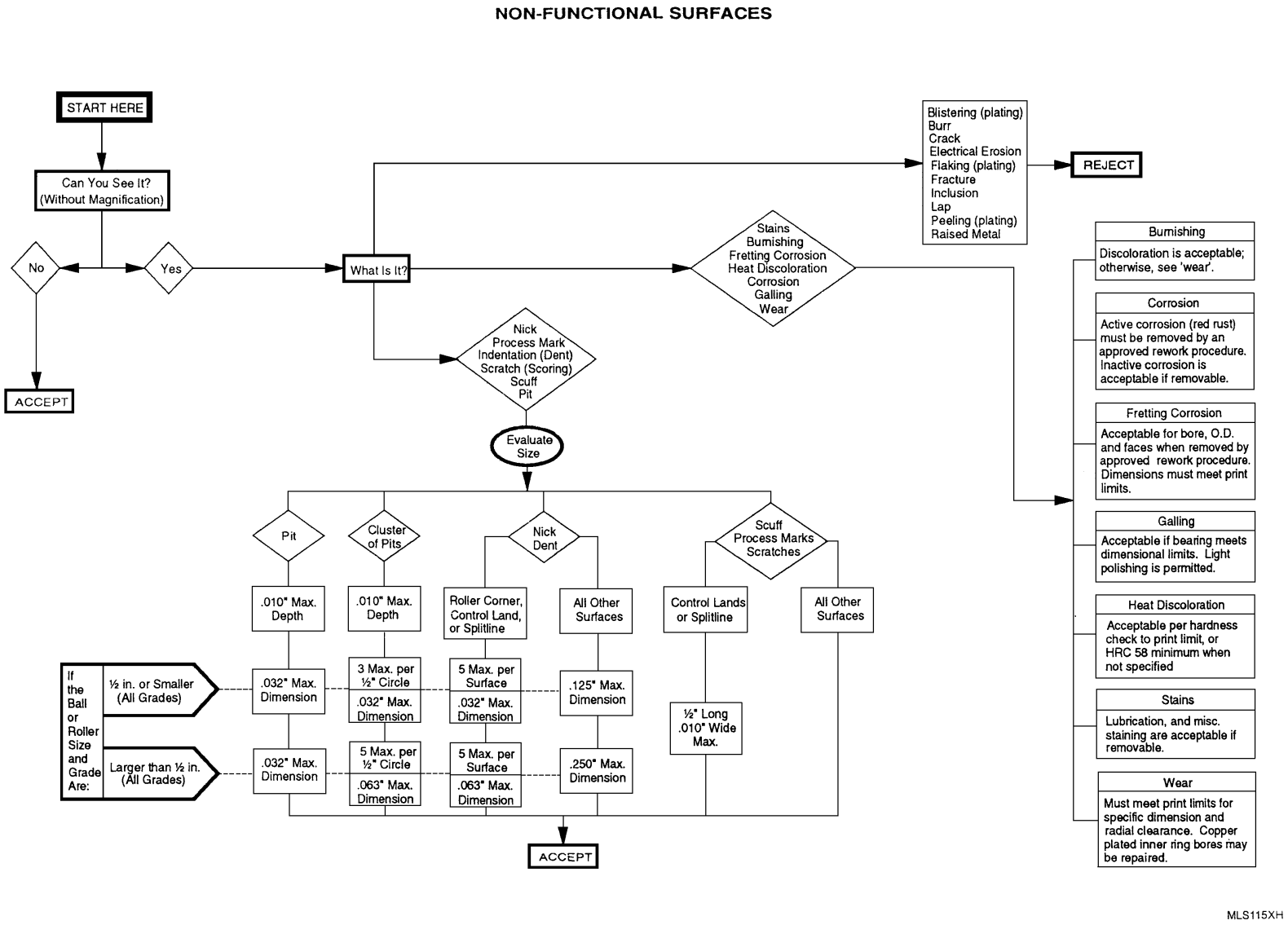

Figure 3. Bearing Non−functional Surfaces Inspection

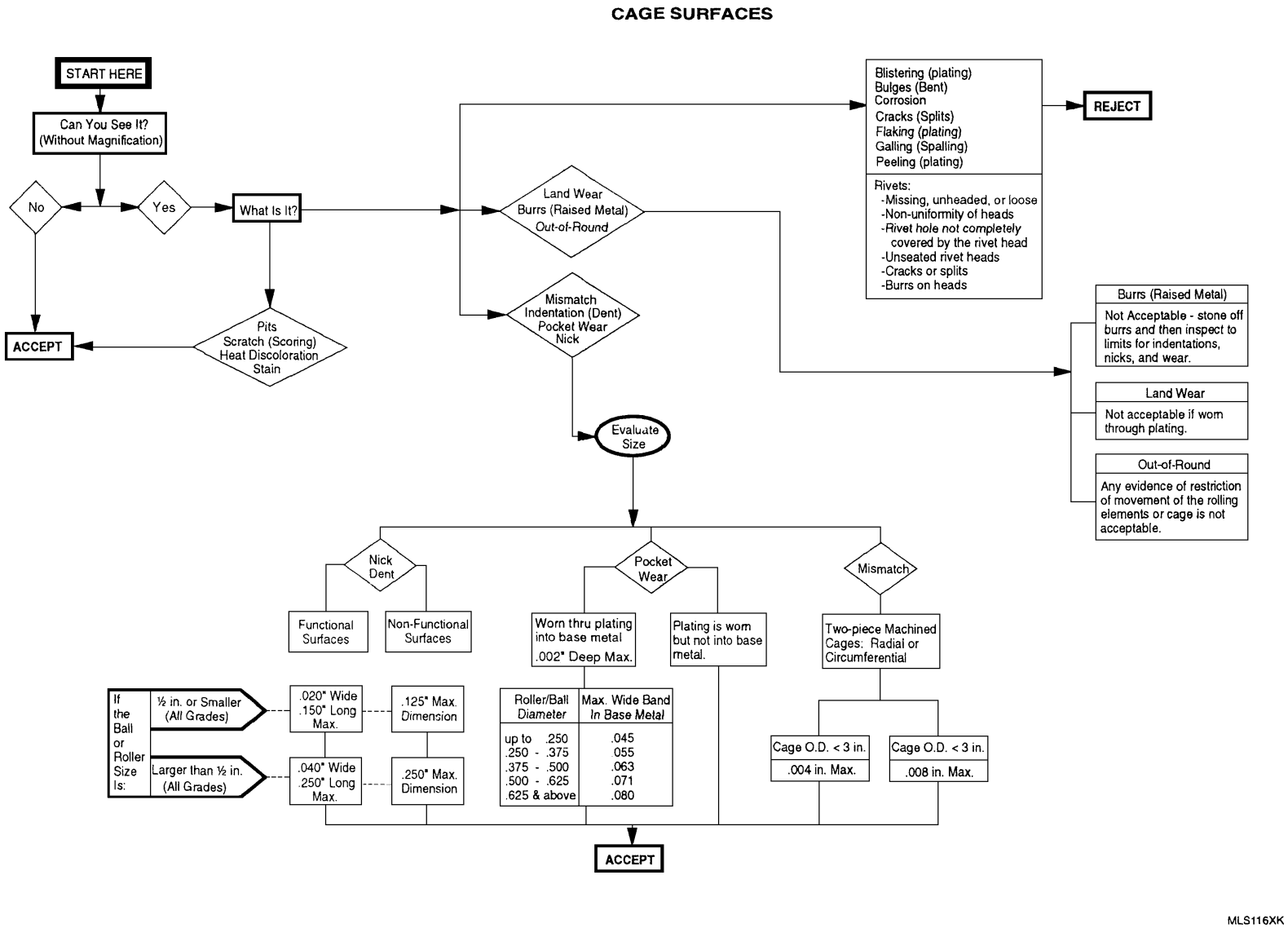

Figure 4. Bearing Cage Surfaces Inspection

20. ANTI−FRICTION BEARINGS − INTERNAL CLEARANCE LIMITS.

NOTE

Ball bearings with two−piece inner rings shall have inner rings securely clamped together during measurement. Use applicable tools for the following.

21. Compressor Extension Shaft Bearing.

Support Equipment Required

Part No./Type Designation	Nomenclature
6796964	Fixture, internal clearance check
6797602	Plate, clamp
6797603	Plate, roller bearing guide
6797656	Adapter, ring, compressor external shaft ball bearing internal radial clearance checking

a. Check internal diametral clearance as follows:

	Print Max (in.)	Overhaul Replace (in.)
NDH	0.0023	0.0023
SKF/MRC	0.0025	0.0025
MPB	0.0025	0.0025

(1) Reject bearings which will not meet the above overhaul limits.

22. Compressor Front Bearing.

Support Equipment Required

Part No./Type Designation	Nomenclature
6796940	Gage, compressor front bearing ring (SKF/MRC)
6796945	Fixture, inspection, out−of round bearing outer ring
6796964	Fixture, internal clearance check
6797602	Plate, clamp
6797603	Plate, roller bearing guide
6797604	Gage, compressor front bearing (NDH)
6897862	Gage, compressor front bearing ring (HYATT)

a. Check internal diametral clearance as follows:

	Print When rounded up	
	Min	Max
NDH (out of round)	0.0017	0.0021
SKF/MRC (out of round)	0.0017	0.0021

	Overhaul When rounded up	
	Min	Max
NDH (out of round)	0.0015	0.0023
SKF/MRC (out of round)	0.0015	0.0023

(1) Reject bearings which will not meet above overhaul limits.

23. Compressor Rear Bearing.

Support Equipment Required

Part No./Type Designation	Nomenclature
6796964	Fixture, internal clearance check
6797602	Plate, clamp
6797603	Plate, roller bearing guide
6797609	Ring, roller bearing internal clearance checking

a. Check internal diametral clearance as follows:

	Print	
	Min	Max
NDH (out of round)	0.0048	0.0055
SKF/MRC (out of round)	0.0029	0.0041
Barden	0.0035	0.0041

	Overhaul	
	Min	Max
NDH (out of round)	0.0044	0.0055
SKF/MRC (out of round)	0.0025	0.0041
Barden	0.0031	0.005

(1) Reject bearings which will not meet the above overhaul limit.

24. Turbine Front Bearing.

Support Equipment Required

Part No./Type Designation	Nomenclature
6796964	Fixture, internal clearance check
6799755	Plate, turbine front roller bearing guide
6799756	Adapter, turbine front roller bearing checking ring
6799757	Plate, clamp, turbine front bearing roller

a. Check internal diametral clearance as follows:

	Print		Overhaul	
	Min	Max	Min	Max
SKF/MRC	0.0017	0.0022	0.0017	0.0025
NDH	0.0017	0.0021	0.0017	0.0024

(1) Reject bearings which will not meet the above overhaul limits.

25. Turbine Rear Bearing.

Support Equipment Required

Part No./Type Designation	Nomenclature
6796964	Fixture, internal clearance check
6797602	Plate, clamp
6797603	Plate, roller bearing guide
6797609	Ring, roller bearing internal clearance checking

a. Check internal diametral clearance as follows:

	Print		Overhaul	
	Min	Max	Min	Max
SKF/MRC	0.0017	0.0022	0.0017	0.0025
NDH	0.0017	0.0022	0.0017	0.0025

(1) Reject bearings which will not meet the above overhaul limits.

26. Propeller Shaft Bearing.

Support Equipment Required

Part No./Type Designation	Nomenclature
6796964	Fixture, internal clearance check
6797651	Plate, propeller shaft bearing inspection clamp
6797652	Plate, propeller shaft roller bearing inspection guide
6797654	Adapter, propeller shaft roller bearing internal clearance checking ring
6797657	Plate, propeller shaft ball bearing inspection guide

a. Check clearance as follows:

(1) Ball Bearing.

	Print End Play	
	Min	Max
NDH (with 15 lb load)		
Part No. 6849405	0.0024	0.0031
Part No. 6870981	0.0014	0.0033
SKF/MRC		
Part No. 6849406	0.0014	0.0033
Part No. 23031572	0.0014	0.0033

	Overhaul End Play	
	Min	Max
NDH (with 15 lb load)		
Part No. 6849405	0.0024	0.0034
Part No. 6870981	0.0014	0.0036
SKF/MRC		
Part No. 6849406	0.0014	0.0036
Part No. 23031572	0.0014	0.0036

(2) Roller Bearing.

	Print Radial Clearance	
	Min	Max
NDH	0.0015	0.0031
SKF/MRC	0.0015	0.0031
MPB	0.0015	0.0031
NW	0.0040	0.0050

	Overhaul Radial Clearance	
	Min	Max
NDH	0.0015	0.0034
SKF/MRC	0.0015	0.0034
MPB	0.0015	0.0034
NW	0.0040	0.0053

b. Reject bearings which will not meet the above overhaul limits.

27. Planet Gear and Bearing Assembly.

Support Equipment Required

Part No./Type Designation	Nomenclature
6796964	Fixture, internal clearance check
6797926	Adapter, planetary gear bearing internal clearance checking

a. Check the total internal radial clearance as follows:

	Print	
	Min	Max
Part No. 6849917	0.0010	0.0022
Part No. 6894130	0.0010	0.0022
Part No. 23003547	0.0010	0.0022
Part No. 23003546	0.0010	0.0022

	Overhaul	
	Min	Max
Part No. 6849917	0.0010	0.0022
Part No. 6894130	0.0010	0.0022
Part No. 23003547	0.0010	0.0022
Part No. 23003546	0.0010	0.0022

(1) Reject bearings which will not meet the above overhaul limits.

28. Rear Carrier Bearing.

Support Equipment Required

Part No./Type Designation	Nomenclature
6796964	Fixture, internal clearance check
6797642	Plate, roller or ball bearing inspection guide
6797643	Plate, roller bearing inspection guide
6797658	Adapter, roller bearing internal clearance checking ring

a. Check internal diametral clearance as follows:

	Print	
	Min	Max
NDH	0.0020	0.0030
SKF/MRC	0.0020	0.0030

	Overhaul	
	Min	Max
NDH	0.0020	0.0033
SKF/MRC	0.0020	0.0033

(1) Reject bearings which will not meet the above overhaul limits.

29. Pinion Gear Front Bearing.

Support Equipment Required

Part No./Type Designation	Nomenclature
23034330	Gage, pinion gear front bearing (SKF/MRC) ring
6796945	Fixture, inspection, out−of−round bearing outer ring
6796964	Fixture, internal clearance check
6796989	Gage, pinion gear front bearing (SKF/MRC) ring
6797646	Plate, pinion gear front roller bearing clamp
6797647	Plate, pinion gear front bearing guide
6797648	Gage, pinion gear front bearing ring (Hyatt)

a. Check internal diametral clearance when measured per paragraph 35.

	Print When rounded up	
	Min	Max
SKF/MRC (out−of−round) . . .	0.0024	0.0032
NDH (out−of−round)		
6871647	0.0024	0.0032
6899694	0.0024	0.0032

	Overhaul When rounded up	
	Min	Max
SKF/MRC (out−of−round) . . .	0.0024	0.0035
NDH (out−of−round)		
6871647	0.0024	0.0035
6899694	0.0024	0.0035

(1) Reject bearings which will not meet the above overhaul limits.

30. Pinion Gear Rear Bearing.

Support Equipment Required

Part No./Type Designation	Nomenclature
23034331	Adapter, roller bearing internal clearance checking ring
6796964	Fixture, internal clearance check
6796978	Adapter, pinion gear rear bearing roller bearing internal clearance checking ring
6797602	Plate, clamp
6797649	Plate, roller bearing inspection guide

a. Check internal diametral clearance as follows:

	Print		Overhaul	
	Min	Max	Min	Max
NDH	0.0022	0.0032	0.0022	0.0035
SKF/MRC	0.0022	0.0032	0.0022	0.0035
MPB	0.0022	0.0032	0.0022	0.0035

(1) Reject bearings which will not meet the above overhaul limits.

31. Main Drive Gear Bearing.

Support Equipment Required

Part No./Type Designation	Nomenclature
6796945	Fixture, inspection, out−of−round bearing outer ring
6796964	Fixture, internal clearance check
6797642	Plate, roller or ball bearing inspection guide
6797643	Plate, roller bearing inspection guide
6797645	Gage, main drive gear bearing (Hyatt) ring
6799795	Gage, main drive gear bearing (SKF/MRC) ring

a. Check internal diametral clearance as follows:

	Print When rounded up	
	Min	Max
NDH	0.0020	0.0030
SKF/MRC	0.0020	0.0030

	Overhaul When rounded up	
	Min	Max
NDH (out−of−round)	0.0020	0.0033
SKF/MRC (out−of−round) . . .	0.0020	0.0033

(1) Reject bearings which will not meet the above overhaul limits.

32. Torquemeter Mid−bearing.

Support Equipment Required

Part No./Type Designation	Nomenclature
6796945	Fixture, inspection, out−of−round bearing outer ring
6796964	Fixture, internal clearance check
6797602	Plate, clamp
6797649	Plate, roller bearing inspection guide
6799821	Gage, torquemeter mid−bearing ring

a. Check internal diametral clearance as follows:

	Print When rounded up	
	Min	Max
NDH (out−of−round)	0.0018	0.0022
SKF/MRC(out−of−round) . . .	0.0016	0.0022

	Overhaul When rounded up	
	Min	Max
NDH (out−of−round)	0.0018	0.0024
SKF/MRC (out−of−round) . . .	0.0016	0.0024

(1) Reject bearings which will not meet the above overhaul limits.

33. ANTI−FRICTION BEARINGS − INTERNAL DIAMETRAL CLEARANCE MEASUREMENT. The following procedure will be used to obtain the internal diametral clearance for pinion gear “out−of−round” bearings. All “out−of−round” bearings shall be checked in a similar manner.

Support Equipment Required

Part No./Type Designation	Nomenclature
23034330	Gage, pinion gear front bearing (SKF/MRC) ring
6796945	Fixture, inspection, out−of−round bearing outer ring
6796964	Fixture, internal clearance check
6796989	Gage, pinion gear front bearing (SKF/MRC) ring
6797646	Plate, pinion gear front roller bearing clamp
6797647	Plate, pinion gear front bearing guide
6797648	Gage, pinion gear front bearing (Hyatt) ring
6797926	Adapter, planetary gear bearing internal clearance checking

NOTE

Measurements are to be made within a temperature range of 65−75°F (18−24°C).

a. Install 6797647 bearing guide plate onto 6796964 internal clearance check fixture. Assemble the inner ring, rollers and cage onto the 6797647 guide plate. Clamp inner ring in a fixed position with 6797646 clamp plate. Install 23034330, 6797648 or 6796989 ring gage over the rollers and connect it to 6796964 check fixture.

b. Actuate 6796964 check fixture to apply 5−15 lbs of force against the bearing. Zero the dial indicator and then reverse the direction of forces against the bearing.

c. Record the indicator reading to the nearest 0.0001 in.

NOTE

Mark bearing inner ring and roller cage so a relative position, between parts, can be maintained.

d. Measure three additional locations, 45°, 90°, and 135° from the first location. Record each indicator reading.

e. Average the four measurements to the nearest 0.0001 in. This is the ring gage−to−inner ring clearance.

NOTE

This value is always a positive (+) value.

f. Position 6797648 or 6796989 ring gage on 6796945 outer ring inspection fixture (comparator). Adjust fixture contact points until they contact the ring gage ID and then zero the fixture dial indicator.

g. Position on bearing outer ring on 6796945 inspection fixture (comparator). Measure and record maximum and minimum indicator readings. Add these readings and then average the sum to nearest 0.0001 in. This average is the amount of variation between bearing outer ring race and ring gage ID. This average may be either a positive or negative value.

h. Calculate the internal diametral clearance by adding the ring gage to inner ring clearance, step e, and the outer ring to ring gage variation, step g.

i. Refer to table 6 for examples of typical “out−of−round” bearing measurements.

Table 6. Internal Diametral Clearance Measurements

	EXAMPLE No. 1		
Internal Diametral Clearance	From		0.002
Drawing Limits	To		0.003
Ring Gage−to−Inner Ring		0.0027	
Clearance		0.0028	
		0.0028	
		0.0028	
	Total	0.0111	
	Average		0.0028
Outer Ring Race−to−Ring	Max	+0.0037	
Gage Variation	Min	−0.0045	
		−0.0008	
	Average		−0.0004
Internal Diametral Clearance	Total		0.0024

	EXAMPLE No. 2		
Internal Diametral Clearance	From		0.002
Drawing Limits	To		0.003
Ring Gage−to−Inner Ring		0.0025	
Clearance		0.0024	
		0.0027	
		0.0026	
	Total	0.0102	
	Average		0.0025
Outer Ring Race−to−Ring	Max	+0.0045	
Gage Variation	Min	−0.0037	
		+0.0008	
	Average		+0.0004
Internal Diametral Clearance	Total		0.0029

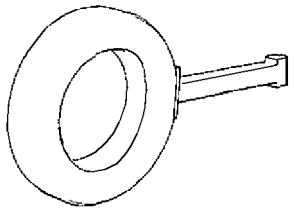

ZZT801XJ

Figure 5. 6796940 Compressor Front Bearing Ring Gage

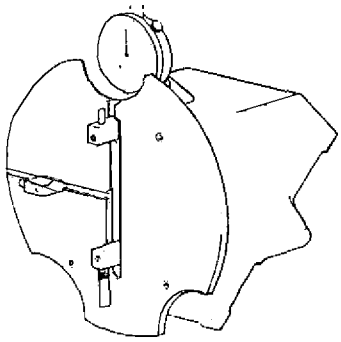

ZZT802XH

Figure 6. 6796945 Out−of−Round Bearing Outer Ring Inspection Fixture

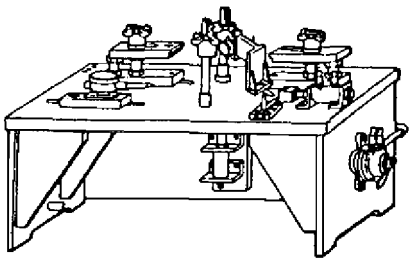

ZZT803XH

Figure 7. 6796964 Internal Clearance Check Fixture

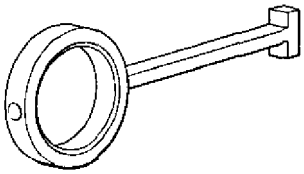

ZZT804XJ

Figure 8. 6796978 Pinion Gear Rear Bearing Roller Bearing Internal Clearance Checking Ring Adapter

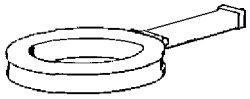

ZZT805XJ

Figure 9. 6796989 Pinion Gear Front Bearing (SKF/MRC) Ring Gage

ZZT806XJ

Figure 10. 6797602 Clamp Plate

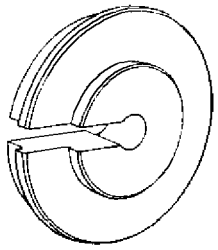

ZZT807XJ

Figure 11. 6797603 Roller Bearing Guide Plate

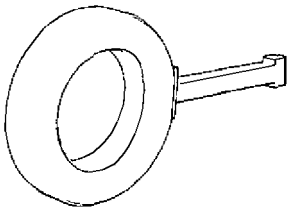

ZZT801XJ

Figure 12. 6797604 Compressor Front Bearing (NDH) Ring Gage

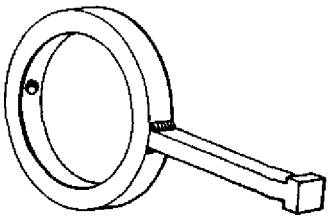

ZZT809XJ

Figure 13. 6797609 Roller Bearing Internal Clearance Checking Ring

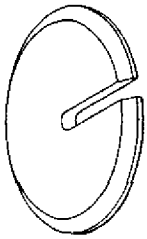

ZZT810XJ

Figure 14. 6797642 Roller or Ball Bearing Inspection Guide Plate

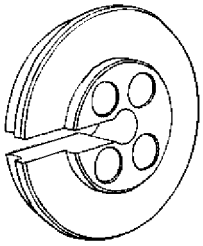

ZZT811XJ

Figure 15. 6797643 Roller or Ball Bearing Inspection Guide Plate

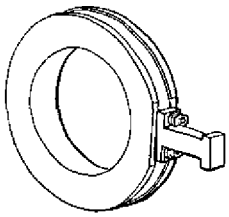

ZZT812XJ

Figure 16. 6797645 Main Drive Gear Bearing (Hyatt) Ring Gage

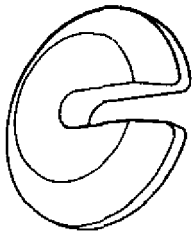

ZZT813XJ

Figure 17. 6797646 Pinion Gear Front Roller Bearing Clamp Plate

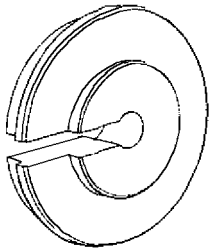

ZZT807XJ

Figure 18. 6797647 Pinion Gear Front Bearing Guide Plate

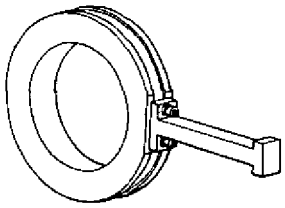

ZZT815XJ

Figure 19. 6797648 Pinion Gear Front Bearing (Hyatt) Ring Gage

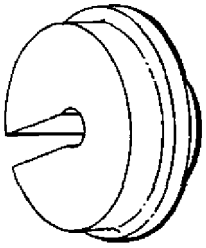

ZZT816XJ

Figure 20. 6797649 Roller Bearing Inspection Guide Plate

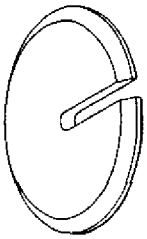

ZZT810XJ

Figure 21. 6797651 Propeller Shaft Bearing Inspection Clamp Plate

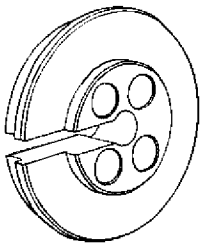

ZZT811XJ

Figure 22. 6797652 Propeller Shaft Bearing Roller Bearing Inspection Guide Plate

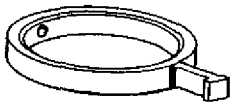

ZZT819XJ

Figure 23. 6797654 Propeller Shaft Roller Bearing Internal Clearance Checking Ring Adapter

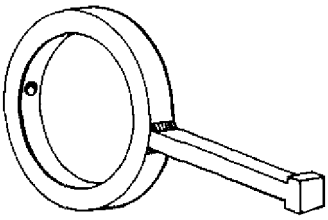

ZZT809XJ

Figure 24. 6797656 Compressor External Shaft Ball Bearing Internal Radial Clearance Checking Ring Adapter

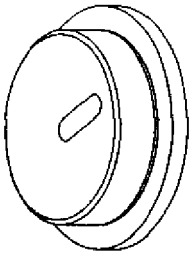

ZZT821XJ

Figure 25. 6797657 Propeller Shaft Ball Bearing Inspection Guide Plate

ZZT819XJ

Figure 26. 6797658 Roller Bearing Internal Ring Adapter

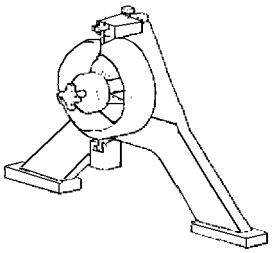

ZZT823XJ

Figure 27. 6797926 Planetary Gear Bearing Internal Clearance Checking Adapter

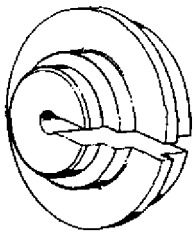

ZZT824XJ

Figure 28. 6799755 Turbine Front Roller Bearing Guide Plate

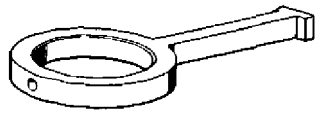

ZZT825XJ

Figure 29. 6799756 Turbine Front Roller Bearing Checking Ring Adapter

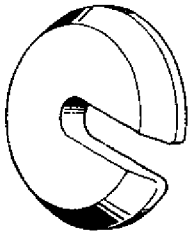

ZZT826XJ

Figure 30. 6799757 Turbine Front Bearing Roller Clamp Plate

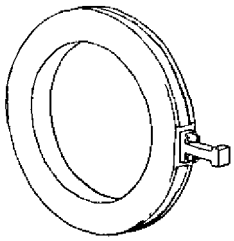

ZZT827XJ

Figure 31. 6799795 Main Drive Gear Bearing (SKF/MRC) Ring Gage

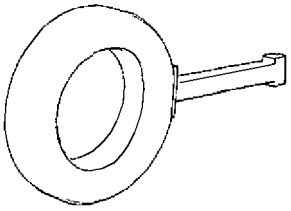

ZZT801XJ

Figure 32. 6799821 Torquemeter Mid−Bearing Ring Gage

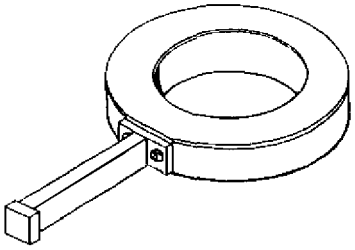

ZZT829XJ

Figure 33. 6897862 Compressor Front Bearing Ring Gage

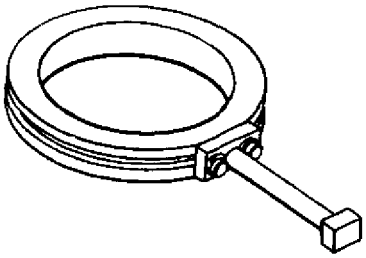

Figure 34. 23034330 Pinion Gear Front Bearing (SKF/MRC) Ring Gage

DEPOT MAINTENANCE

CLEANING, INSPECTION, AND LUBRICATION

LINKAGE ROD−END BEARINGS

Reference Material

None

Alphabetical Index

Subject **Page No.**

Introduction 2
Linkage Rod−End Bearings 2
Cleaning 2
Inspection 2
Lubrication 2

Record of Applicable Technical Directives

None

1. **INTRODUCTION.**

2. This work package (WP) provides the instructions for cleaning, inspection, and lubrication of the linkage rod−end bearings used on the T56−A−427 turboprop engine.

3. **LINKAGE ROD−END BEARINGS.**

4. LINKAGE ROD−END BEARINGS − CLEANING.

Materials Required

Specification No./Part No.	Nomenclature
MIL−PRF−680, Type II	Solvent, Dry Cleaning

Dry Cleaning Solvent MIL−PRF−680, Type II **3**

CAUTION

Do not magnetic particle inspect rod ends.
Do not wash Fafnir bearings.

a. Fafnir bearings will merely be wiped clean. Roll the ball of the rod end to check for free rotation.

b. Clean HeimCo bearing in MIL−PRF−680, Type II dry cleaning solvent. Rod ends should be moved vigorously through solvent and the ball rolled by hand to remove any foreign material on bearing surface.

c. Dry bearing thoroughly before lubricating.

5. LINKAGE ROD−END BEARINGS − INSPECTION.

Support Equipment Required

Part No./Type Designation	Nomenclature
6796889	Fixture, rod−end internal clearance checking
——	Scribe, 0.030 in. radius

a. Inspect bearing surface visually for pitting, flaking of plating, corrosion, or wear as defined below:

(1) Pitting: A pit (for the purpose of this inspection) is a small irregular cavity which can be felt with a 0.030 in. radius scribe. Pits are acceptable when not exceeding 0.010 in. deep or 0.020 in. wide and there are not more than three pits in an area of 3/4 in. diameter.

(2) Flaking of plating: Flaking of plating sufficient to cause a loss of more than 10% of the area of contact on the surface of the ball is cause for rejection.

(3) Corrosion: Rust will be removed from all load carrying surfaces. Buff, polish, or clean chemically. In the advanced stages of pit corrosion, no correction is possible.

(4) Wear: Mount the rod end in the 6796889 internal clearance checking fixture (figure 1). Check the movement of the rod end in a direction perpendicular to the axis of the bolt. Reject rod ends exceeding 0.003 in. movement.

6. LINKAGE ROD−END BEARINGS − LUBRICATION.

Materials Required

Specification No./Part No.	Nomenclature
MIL−PRF−23827	Grease, lubricating

CAUTION

Fafnir rod ends (ball bearing type) with bonded neoprene seals must not be washed or relubricated. An attempt to lubricate may burst the seals. Merely wipe clean prior to assembling.

Some female fittings do not have a lubricant reservoir and the blind hole fittings can be damaged by excessive pressure.

General Purpose Grease MIL−PRF−23827 20

a. HeimCo, type I, has a lubricant reservoir formed by an extension of the tapped hole of the female fitting. Lubricate it by placing grease, MIL−PRF−23827 in the tapped hole and running in the mating piece to force the lubricant through the reservoir into the lubrication groove. As the grease is forced into the bearing, the ball should be rolled until it is apparent that lubrication is sufficient.

b. HeimCo, type II, has a lubricant reservoir formed by an extension of the tapped hole of the female fitting. Lubricate it by turning the ball at an angle that permits the grease, MIL−PRF−23827 to be forced between the ball and retainer into the lubricant groove. The ball should be turned and grease added until new grease is observed on the side opposite the application. Care should be taken to ensure even distribution of the lubricant.

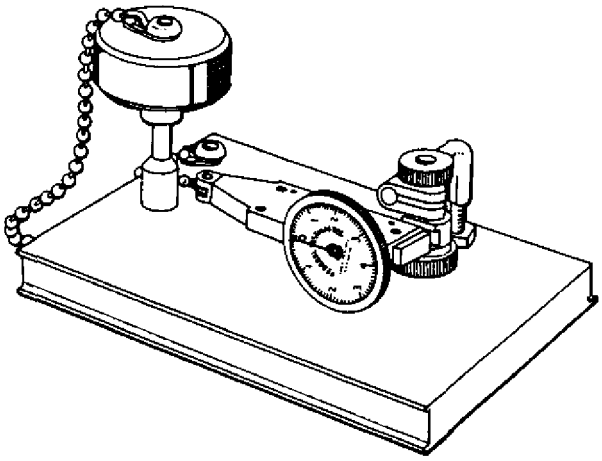

Figure 1. 6796889 Rod−End Internal Clearance Checking Fixture

DEPOT MAINTENANCE

TESTING

COIL SPRINGS

Reference Material

None

Alphabetical Index

Subject **Page No.**

Coil Springs 2
Testing 2
Introduction 2

Record of Applicable Technical Directives

None

1. **INTRODUCTION.**

2. This work package (WP) provides the instructions for testing of the coil springs used on the T56−A−427 turboprop engine.

3. **COIL SPRINGS.**

4. COIL SPRINGS − TESTING.

Support Equipment Required

Part No./Type Designation	Nomenclature
6799676 or equivalent	Tester, spring, 0−150 pound range, 1/4 pound graduations

a. Springs shall be tested for spring force with the 6799676, 0 − 150 pound range, spring tester (figure 1). Use the operating procedure included with spring tester and check springs to limits in table 1.

Table 1. Coil Spring Test Limits

Part No.	Compressed Height (in.)	Load (pound)
6737122: Check in a 1.50 in. by 0.882 bore. Invert spring and repeat check	2.350	60.5 − 64.0
6784206	2.0625	14 − 16
6784334	0.625	27.6 − 29.6
6784708	0.890	29.7 − 32.7

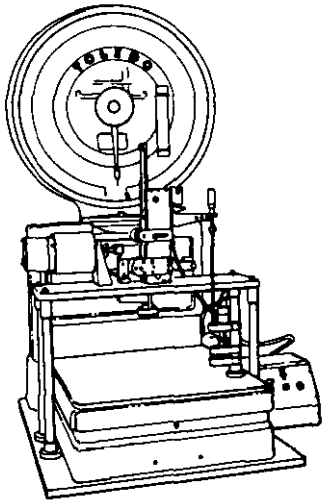

ZZT344XE

Figure 1. 6799676 Spring Tester