NAVAIR 02B-5DG-6–1–1
15 November 2004
Change 2 - 1 February 2010

SUPPLEMENT

TECHNICAL MANUAL

INTERMEDIATE MAINTENANCE

EXTERNAL TUBING, CABLING AND CLAMPING

TURBOPROP ENGINE

NAVY MODEL
T56–A–427

This manual supplements NAVAIR 02B–5DG–6–1.

DISTRIBUTION STATEMENT C. Distribution authorized to U.S. Government agencies only and their contractors to protect publications required for official use or for administrative or operational purposes only (30 October 1998). Other requests for this document shall be referred to Commander, Naval Air Systems Command (PMA–231), 47123 Buse Rd, Bldg 2272, Patuxent River, MD 20670–1547.

DESTRUCTION NOTICE – For unclassified, limited documents, destroy by any method that will prevent disclosure of contents or reconstruction of the document.

PUBLISHED BY DIRECTION OF
COMMANDER, NAVAL AIR SYSTEMS COMMAND

0802LP1099239

NUMERICAL INDEX OF EFFECTIVE WORK PACKAGES/PAGES

List of Current Changes

Original 0 . . . . . 15 November 2004
Original 1 . . . . . 1 December 2008
Change 2 . . . . . 1 February 2010

Only those work packages assigned to the manual are listed in this index. Dispose of superseded work packages. If changed pages are issued to a work package, insert the changed pages in the applicable work package. The portion of text affected in a changed or revised work package is indicated by change bars in the outer margin of each column of text. Changes to illustrations are indicated by pointing hands or change bars, as applicable.

Total number of pages in this manual is 88 consisting of the following:

WP/ Page No.	Change No.	WP/ Page No.	Change No.	WP/ Page No.	Change No.
Title	2	WP 004 00		7	0
A	2	1	1	8 (blank)	0
TPDR-1	2	2 thru 7	0	9 thru 11	0
TPDR-2 (blank)	2	8	1	12 (blank)	0
HMWS-1 thru HMWS-2	0	9 thru 16	0	13	0
WP 001 00		WP 005 00		14 (blank)	0
1 thru 2	0	1	0	15 thru 16	0
WP 002 00		2 (blank)	0	17	0
1 thru 2	0	WP 006 00		18 (blank)	0
WP 003 00		1	1	19 thru 25	0
1 thru 3	0	2 thru 5	0	26	1
4 (blank)	0	6 (blank)	0	27 thru 56	0

LIST OF TECHNICAL PUBLICATIONS DEFICIENCY REPORTS INCORPORATED

INTERMEDIATE MAINTENANCE

EXTERNAL TUBING, CABLING AND CLAMPING TURBOPROP ENGINE

MODEL T56-A-427

The List of Technical Publications Deficiency Reports (TPDR) is not cumulative. At each change to the manual, the list is revised to delete previous entries. If no TPDR data is applicable to the current change, the word "None" is entered in the Identification No./QA Sequence No. column.

Valid TPDR data incorporated in the current change will be entered by reporting activity TPDR file number (Identification No.) and corresponding NATEC QA file number (QA Sequence No.) in the Identification No./QA Sequence No. column and the location of the data in the Location column. Incorporated data is identified by work package number (WP), page number (Pg), paragraph number (P), figure number (F) and table number (T) as appropriate.

Identification No./QA Sequence No.	Location
None	

WARNINGS APPLICABLE TO HAZARDOUS MATERIALS

Warnings in this manual alert personnel to hazards associated with the use of hazardous materials. Additional information related to hazardous materials is provided in OPNAVINST 5100.23, Navy Occupational Safety and Health (NAVOSH) program manual, NAVSUPINST 5100.27, Navy Hazardous Material Control Program, and the DOD 6050.5, Hazardous Materials Information System (HMIS) series publications. For each hazardous material used within the Navy, a Material Safety Data Sheet (MSDS) must be provided and available for review by users. Consult your local safety and health staff concerning any questions regarding hazardous materials, MSDS, personal protective equipment requirements, appropriate handling and emergency procedures, and disposal guidance.

Under the heading **HAZARDOUS MATERIALS WARNINGS**, complete warnings, including related icon(s) and a numeric identifier, are provided for hazardous materials used in this manual. Each hazardous material is assigned only one numeric identifier. Since only those hazardous materials addressed in this manual will be listed, the numeric identifiers may not appear in sequential order.

In the text of the manual, the caption **WARNING** is not used for hazardous material warnings. Hazards are cited with appropriate icon(s), the nomenclature of the hazardous material, and the numeric identifier that relates to the complete warning. Users of hazardous materials shall refer to the complete warnings, as necessary.

EXPLANATION OF HAZARDOUS MATERIALS ICONS

Biological

The abstract symbol bug shows that a material may contain bacteria or viruses that present a danger to life or health.

Chemical

The symbol of a drop of a liquid burning a hand shows a material that causes burns to human skin or tissue.

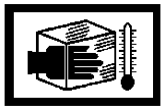

Cryogenic

The symbol of a hand in a block of ice shows that the material is extremely cold and can injure human skin or tissue.

Explosion

This rapidly expanding symbol shows that the material may explode if subjected to high temperature, sources of ignition, or high pressure.

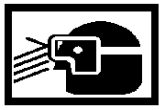

Eye Protection

The symbol of a person wearing goggles shows a material that can injure your eyes.

Fire

The symbol of a fire shows that a material can ignite and burn you.

Poison

The symbol of skull and crossbones shows that a material is poisonous or is a danger to life.

Radiation

The symbol of a human figure in a cloud shows that material vapors present a danger to life or health.

Vapor Hazard

The symbol of a human figure in a cloud shows that breathing this material can present a health hazard.

HAZARDOUS MATERIALS WARNINGS

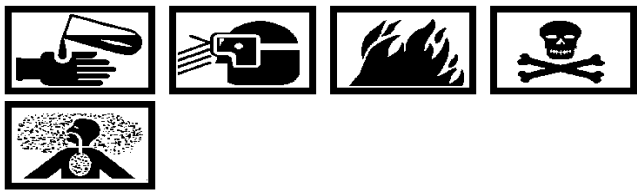

Nickel Antiseize Compound, NS165 (Never Seez) **1**

Antiseize compound, NS165, is somewhat flammable, toxic and an irritant. Keep away from heat, sparks and open flames. Use in well–ventilated area. Eye contact: Flush with water; get medical attention. Skin contact: Wash with soap and water. Ingestion: Do not induce vomiting; get medical attention. Wash hands with soap and water after use and before eating, drinking or smoking.

Adhesive/Sealant 222, or 42540 (Loctite) **2**

Loctite 222, or 42540 excessive or repeated skin contact with anaerobic adhesive/sealants may cause skin irritation in sensitive persons. In case of contact with sensitive skin, remove promptly by washing with soap and water. In case of skin reaction, discontinue contact with product. If skin reaction persists, get medical attention. To avoid skin contact, use the applicator nozzle provided.

Dye Layout (Dykem Blue), 80600 **3**

Dye Layout (Dykem Blue), 80600, is flammable, toxic and an irritant. Keep away from heat, sparks and open flames. Use in well–ventilated area. Eye contact: Flush with cold water; get medical attention. Skin contact: Wash with soap and water. Inhalation: Remove to fresh air; get medical attention. Ingestion: Do not induce vomiting; get medical attention. Wash hands with soap and water after use and before eating, drinking or smoking.

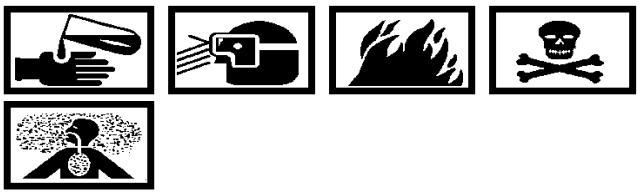

Lubricating Oil, MIL–PRF–6081 (Grade 1010) **4**

Lubricating Oil MIL–PRF–6081 Grade 1010, is flammable, toxic and an irritant. Keep away from heat, sparks and open flames. Use in well–ventilated area, especially when exposure to hot oil or mist is possible. Eye contact: Flush with water for 15 minutes; get medical attention. Skin contact: Wash with soap and water. Inhalation: Remove to fresh air; get medical attention. Ingestion: Do not induce vomiting; get medical attention. Wash hands with soap and water after use and before eating, drinking or smoking.

Engine Lubricating Oil, MIL–PRF–23699 **5**

If lubricating oil MIL–PRF–23699, is decomposed by heat, toxic gases are released. Prolonged contact with liquid or mist may cause dermatitis and irritation. The tri–cresyl–phosphate additive of synthetic oil conforming to Spec MIL–PRF–23699 is readily absorbed by the skin and is highly toxic. Any part of the body that comes in contact with the oil shall be cleaned immediately. In case of prolonged contact with skin, wash with soap and water. Remove saturated clothing. Eye contact: Flush with water immediately. Ingestion: Do not induce vomiting; get medical attention. When handling liquid, wear rubber gloves. If prolonged contact with mist is likely, wear approved respirator.

ALPHABETICAL INDEX

INTERMEDIATE MAINTENANCE

EXTERNAL TUBING, CABLING AND CLAMPING

TURBOPROP ENGINE

MODEL T56–A–427

Title	Work Package Number Maintenance Allocation 1st	2nd	3rd
Brackets and Keys			
Installation	004 00	004 00	004 00
Cabling (Refer to Harness Assemblies, Electrical; Harness Assemblies, Thermocouple; or Lead Assemblies, Igniter)	–––	–––	–––
Components, External Engine			
Installation	005 00	005 00	005 00
Electrical Harnesses (Refer to Harness Assemblies, Electrical)	–––	–––	–––
Engine Illustrations			
Complete Views (Sequence Numbers)	006 00	006 00	006 00
Engine Zones Location	006 00	006 00	006 00
Splitline (Flange) Locations	006 00	006 00	006 00
Splitline Views, Individual	004 00	004 00	004 00
Zone Detail Views	006 00	006 00	006 00
External Engine Components (Refer to Components, External Engine)	–––	–––	–––
Harness Assemblies, Electrical			
Installation	006 00	006 00	006 00
Harness Assemblies, Thermocouple			
Installation	006 00	006 00	006 00
Hose and Tubing Installation			
Air System	006 00	006 00	006 00

Title	Work Package Number Maintenance Allocation 1st	2nd	3rd
Fuel System	006 00	006 00	006 00
Oil System	006 00	006 00	006 00
Igniter Leads (Refer to Lead Assemblies, Igniter)	---	---	---
Illustrations, Engine (Refer to Engine Illustrations)	---	---	---
Introduction	003 00	003 00	003 00
Keys and Brackets Installation	004 00	004 00	004 00
Lead Assemblies, Igniter Installation	006 00	006 00	006 00
Lockwire and Torque Requirements	004 00 004 00	004 00 004 00	004 00 004 00
Materials Required, Consolidated List	003 00	003 00	003 00
Numerical Index, Part Number to Installation Sequence Number	002 00	002 00	002 00
Quality Assurance Requirements	003 00 004 00 006 00	003 00 004 00 006 00	003 00 004 00 006 00
Reference Material, Consolidated List	003 00	003 00	003 00
Support Equipment Required, Consolidated List	003 00	003 00	003 00
Thermocouple Assemblies Installation	006 00	006 00	006 00
Thermocouple Harness (Refer to Harness Assemblies, Thermocouple)	---	---	---
Torque and Lockwire Requirements	004 00 006 00	004 00 006 00	004 00 006 00
Tubing and Hose Installation			
Air System	006 00	006 00	006 00
Fuel System	006 00	006 00	006 00
Oil System	006 00	006 00	006 00

NUMERICAL INDEX OF PART NUMBERS TO INSTALLATION SEQUENCE NUMBERS

INTERMEDIATE MAINTENANCE

EXTERNAL TUBING, CABLING AND CLAMPING

TURBOPROP ENGINE

MODEL T56–A–427

1. **INTRODUCTION**

2. This work package (WP) contains a numerical index table of part numbers to installation sequence numbers. Table 1 is the numerical index.

3. When the same part number has reference to two different installation sequence numbers, the part is used at two locations. When different part numbers have reference to the same installation sequence number, the parts are alternates at one location.

4. Once an installation sequence number is known, refer to the EXTERNAL TUBING AND CABLING INSTALLATION WP applicable to engine model being assembled for installation of the part.

Table 1. Numerical Index of Part Numbers to Installation Sequence Numbers

Part No.	Sequence No.
AE3663661H472	2
23006292 (ignition relay)	12
23007473	10
23007929	5
23007930	38
23007934	71
23007944	8
23007948	9
23008233	3 39
23009750	34
23031840	11
23032654	72
23032680 (air distribution tee)	4
23032685	70
23032692	46
23032694	47
23033772	37
23035452	69
23035489	51
23037389	40
23038786	24
23038801	16
23052046	41
23052049	13
23052052 (Al solenoid valve)	65
23056918	51
23060836	67
23060837	68
6782647 (ignition relay)	12
6827810	63

Part No.	Sequence No.
6827811	64
6829298	67
6829299	68
6843446	7
6844333-041132	44
6844335-061171	43
6844335-069171	43
6844335-081472	2
6844335-089472	2
6844336-041114	48
6844336-061126	50
6844337-041085	42
6844338-061140	35
6844702-061171	43
6844703-043114	48
6844703-063126	50
6844704-043085	42
6844744-061171	43
6844746-041114	48
6844746-061126	50
6844747-041085	42
6844749-061140	35
6844813-061171	43

Part No.	Sequence No.
6844815-041114	48
6844815-043114	48
6844815-061126	50
6844815-063126	50
6846454-061140	35
6846454-063140	35
6846460-041132	44
6847553-043132	44
6847554-043085	42
6876645	66
6877213	59
6877214	60
6877217	62
6877218	61
6879880G095E255	55
6879880H167F267	6
6879880J100A	58
6886430E064B	14
6886430E084F244	1
6886430E100C	36
6886430E274C	15
6886430G127B	49 45

INTRODUCTION

INTERMEDIATE MAINTENANCE

EXTERNAL TUBING, CABLING AND CLAMPING

TURBOPROP ENGINE

MODEL T56–A–427

5. INTRODUCTION.

6. This work package (WP) contains the purpose and scope of the manual supplement and related instructions to install the external engine parts on the T56–A–427 Turboprop engine.

7. PURPOSE.

8. This manual provides supplemental instructions to NAVAIR 02B–5DG–6–1 Intermediate Maintenance Manual. The following external engine part installation functions are included.

a. Installation of brackets and attaching hardware on engine splitlines (flanges) and case assemblies.

b. Installation of external tubes, hoses and electrical harnesses (tubing and cabling) and attaching hardware (clamping) on the engine.

9. SCOPE.

10. This manual is prepared in WP format to provide the user with numerical indexes of part numbers to installation sequence numbers (WP 002 00) and instructions for installation of external engine parts by engine model.

11. MANUAL USE.

12. RECORD OF APPLICABLE TECHNICAL DIRECTIVES ON WORK PACKAGE TITLE PAGE. When applicable, technical directives (TD) are incorporated into the affected WP to cover the Before and After configurations resulting from the TD retrofit. Date entries in TD record will be either of the following:

13. When an issued TD is incorporated, the issue date of the TD is entered in the “Date” column and the date (manual change date) TD data was incorporated into the manual will be entered in the “Date Inc” column.

14. When an engineering change proposal (ECP) is approved and a TD number has been assigned, but not yet prepared, the ECP data is incorporated into the manual. The date entries will be a dash (–) in the “Date” column and the date (manual change date) ECP data was incorporated into manual in the “Date Inc” column. Also, the notation “ECP coverage only” will be entered in the “Remarks” column. When the TD is issued, the issue date will be entered in the “Date” column. The notation “ECP coverage only” is deleted and a dash (–) is entered.

Table 1. Historical Record of Applicable Technical Directives

Type/No.	Date	Title and Ecp No.	Date Inc.	Remarks
PPC–110	12/31/99	Fuel Enrichment System Removal (ECP 2104)	7/15/04	—

15. QUALITY ASSURANCE. The method for indicating Quality Assurance (QA) requirements in this manual is contained in the QUALITY ASSURANCE REQUIREMENTS paragraph of each affected technical WP. Normally all torque and lockwire procedures are required to be witnessed by QA personnel. Therefore, to reduce QA man–hours the activity QA organization should be authorized to identify, by a QA authorized maintenance instruction, those procedures which will be witnessed by QA personnel and those procedures which will be witnessed by CDI/experienced maintenance personnel.

16. CONSOLIDATED LIST OF SUPPORT EQUIPMENT REQUIRED. Table 2 contains the consolidated list of support equipment required to accomplish the tasks detailed in this manual.

17. CONSOLIDATED LIST OF MATERIAL REQUIRED. Table 3 contains the consolidated list of materials required to accomplish the tasks detailed in this manual.

Table 2. Consolidated List of Support Equipment Required

Part No./Type Designation	Nomenclature	WP Application
–––	Torque Wrench (0–150 lb–in.)	006 00
–––	Torque Wrench (0–300 lb–in.)	004 00
–––	Torque Wrench (0–500 lb–in.)	006 00
MS90387–1	Tool, Strap Installation	006 00

Table 3. Consolidated List of Materials Required

Specification/ Part No.	Nomenclature	WP Application
AS3085–113	Packing, Preformed	006 00
MIL–PRF–23699	Oil, Lubricating	006 00
MIL–PRF–6081 Grade 1010	Oil, Lubricating	006 00
MS20995C20	Lockwire (0.020 in. dia)	006 00
MS20995C32	Lockwire (0.032 in. dia)	004 00, 006 00
MS3367–1–9	Strap, Plastic	006 00
NS165	Antiseize Compound (Never Seez)	004 00
222, or 42540	Adhesive/Sealant (Loctite)	004 00
23001146–3	Gasket, Metallic C–ring	006 00
23008234	Ring Assembly, Piston	006 00
23032357	Gasket, Metallic Thermocouple	006 00
6738108	Gasket, Metallic O–ring	006 00
6784418–056	Seal, Metallic O–ring	006 00
6784418–062	Seal, Metallic O–ring	006 00
6784419–4	Seal, Metallic O–ring	006 00
80600	Dye Layout (Dykem Blue)	004 00

18. WARNINGS AND CAUTIONS APPLICABLE TO HAZARDOUS MATERIALS.

19. Warnings and cautions for hazardous materials listed in this manual are designed to apprise personnel of hazards associated with such items when they come in contact with them by actual use. Additional information related to hazardous materials is provided in OPNAVINST 5100.23 Navy Occupational Safety and Health (NAVOSH) Program Manual and the DOD 6050.5 Hazardous Materials Infromation System (HIMS) series publications. Consult your local safety and health staff concerning specific personnel protective requirements and appropriate handling and emergency procedures.

20. ABBREVIATIONS. The following is a list of all abbreviations used in this manual. The list includes abbreviations listed in ASME Y14.38M and abbreviations not listed in ASME Y14.38M.

Abbreviations	Term
AI	anti–icing
CDI	collateral duty inspector (QA)
DEC	digital electronic control
ECP	engineering change proposal
FWD	forward
INC	incorporated
lb–in	pound–inches
LH	left hand
NINC	not incorporated
PN	part number
QA	quality assurance
RH	right hand
Seq	sequence
TD	technical directive
WP	work package

21. REFERENCE MATERIAL. The following is a consolidated list of reference material cited in each WP.

Title	Publication No.
Illustrated Parts Breakdown	NAVAIR 02B–5DG–4
Intermediate Maintenance	NAVAIR 02B–5DG–6–1

22. COPY FREEZE DATE.

23. The copy freeze date is the date established by the procuring activity after which the preparing activity will not insert further additions, deletions, and changes to the publication material. This does not include last–minute corrections of obvious errors that are essential to safety or equipment performance. Additions, deletions, and changes accumulated after the copy freeze date shall be held for insertion in the next change to the publication.

24. MANUAL DISTRIBUTION.

25. Procedures to be used by naval activities and other Department of Defense activities requiring NAVAIR technical manuals are defined in NAVAIR 00–25–100 and NAVAIRINST 5605.5.4A.

26. To automatically receive future changes and revisions to NAVAIR technical manuals, an activity must be established on the Automatic Distribution Requirements List (ADRL) maintained by the Naval Air Technical Data and Engineering Services Command (NATEC). To become established on the ADRL, notify your activity central technical publications librarian. If your activity does not have a library, you may establish your automatic distribution requirements by contacting the Commanding Officer, NATEC, Attn: Distribution, NAS North Island, Bldg. 90, P.O. Box 357031, San Diego, CA 92135–7031. Annual reconfirmation of these requirements is necessary to remain on automatic distribution. Please use your NATEC assigned account number whenever referring to automatic distribution requirements.

27. If additional or replacement copies of this manual are required with no attendant changes in the ADRL, they may be ordered by submitting requisition to Commanding Officer, Navy Aviation Supply Office, Naval Publications and Forms Directorate, 5801 Tabor Avenue, Philadelphia, PA 19120–5099.

INTERMEDIATE MAINTENANCE

BRACKET INSTALLATION

TURBOPROP ENGINE

MODEL T56–A–427

Reference Material

External Engine Component Installation . . . . . WP 005 00

Alphabetical Index

Subject	Page No.
Aft Flange of Rear Turbine Bearing Support Ring – Figure 3	5
Bracket and Key Installation	2
Installation Figure Description	2
Torque and Lockwire Requirements	2
Brackets Installed on External Engine Components	2
Installation Figures	
Aft Flange of Rear Turbine Bearing Support Stiffener – Figure 3	5
Combustion Chamber Outer Case Bottom View – Figure 7	9
Complete Engine Assembly Splitline Locations and Identification – Figure 1	3
Engine Side Mount Piloted Bolt Installation – Figure 9	11
Splitline A (Turbine Vane Case and Rear Turbine Bearing Support) – Figure 2	4
Splitline B (Turbine Inlet and Turbine Vane Case) – Figure 4	6
Splitline C (Combustion Chamber Outer Case and Turbine Inlet Vane Case) – Figure 5	7
Splitline D (Combustion Chamber Outer Case and Compressor Diffuser) – Figure 6	8
Splitline E (Compressor Diffuser and Compressor Case) – Figure 8	10
Splitline G (Compressor Case and Compressor Air Inlet Housing) – Figure 10	12
Splitline F1 and Left Side of Compressor Case – Figure 11	13
Splitline F2 and Right Side of Compressor Case – Figure 12	15
Introduction	2
Quality Assurance	2

Record of Applicable Technical Directives
None

28. **INTRODUCTION.**

29. This work package (WP) contains instructions for installation of keys and brackets on the vertical splitlines (flanges), horizontal splitlines (including compressor case assembly studs) and combustion chamber outer case assembly. Refer to figure 1 for locations and identification of the splitlines.

30. **BRACKETS INSTALLED ON EXTERNAL ENGINE COMPONENTS.**

31. Installation of brackets installed on external engine components (WP 005 00) is not covered in this WP. Instructions for installation of these brackets are contained in the maintenance WP applicable to the component.

32. **QUALITY ASSURANCE REQUIREMENTS**

33. The torque and lockwire requirements called out in the individual splitline and case illustrations (figures 2 and 12) shall be witnessed by Quality Assurance as directed by local instructions. If no local instructions are in place, all torque and lockwire procedures shall be witnessed.

34. **BRACKET AND KEY INSTALLATION.**

35. INSTALLATION FIGURE DESCRIPTION (figures 2 through 12). The necessary information and requirements for installation of brackets/keys are provided in the applicable figure of each splitline and case assembly. The following data is included.

a. Illustration portion of a figure provides:

(1) Splitline identification (letter)

(2) Viewing direction

(3) Bracket/key location by item number and bolthole numbers.

(4) Bolt thread and nut face lubricant

(5) Bolt head location

(6) Nut/bolt torque values

b. Table portion of a figure provides:

(1) 1st column – Key/bracket item number corresponding to item number in illustration portion

(2) 2nd column – Part number of the item

(3) 3rd column – Direction to orient the angled portion of bracket/key for proper installation on the splitline or case assembly

(4) 4th column – Bolt/nut part numbers, applicable bolthole numbers, and related requirements

(5) Notes – Provides the pertinent related installation requirements not covered in 4th column remarks

36. TORQUE AND LOCKWIRE REQUIREMENTS. (Figures 2 through 12.)

Support Equipment Required

Part No./Type Designation	Nomenclature
---	Torque Wrench (0–300 lb–in.)
---	Torque Wrench (0–1000 lb–in.)

Materials Required

Specification No./Part No.	Nomenclature
NS165	Anti–seize Compound (Never–Seez)
222 or 42540	Adhesive/Sealant (Loctite)
80600	Dye Layout (Dyken Blue)
MS20995C32	Lockwire

a. Torque requirements.

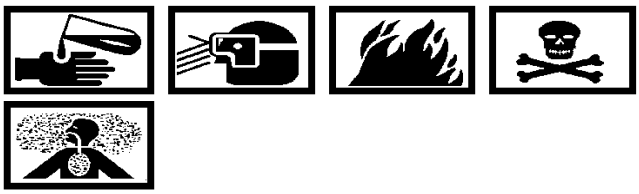

Nickel Antiseize Compound, NS165 (Never Seez) **1**

Adhesive/Sealant 222, or 42540 (Loctite) **2**

(1) Lubricate bolt threads and nut faces with antiseize compound or Loctite as specified in the illustration/table portion of figure applicable to the splitline/case assembly being assembled.

(2) Use current calibrated torque wrenches to torque all nuts and bolts.

b. Lockwire bolts as specified in the table portion of figure applicable to the splitline/case assembly being assembled.

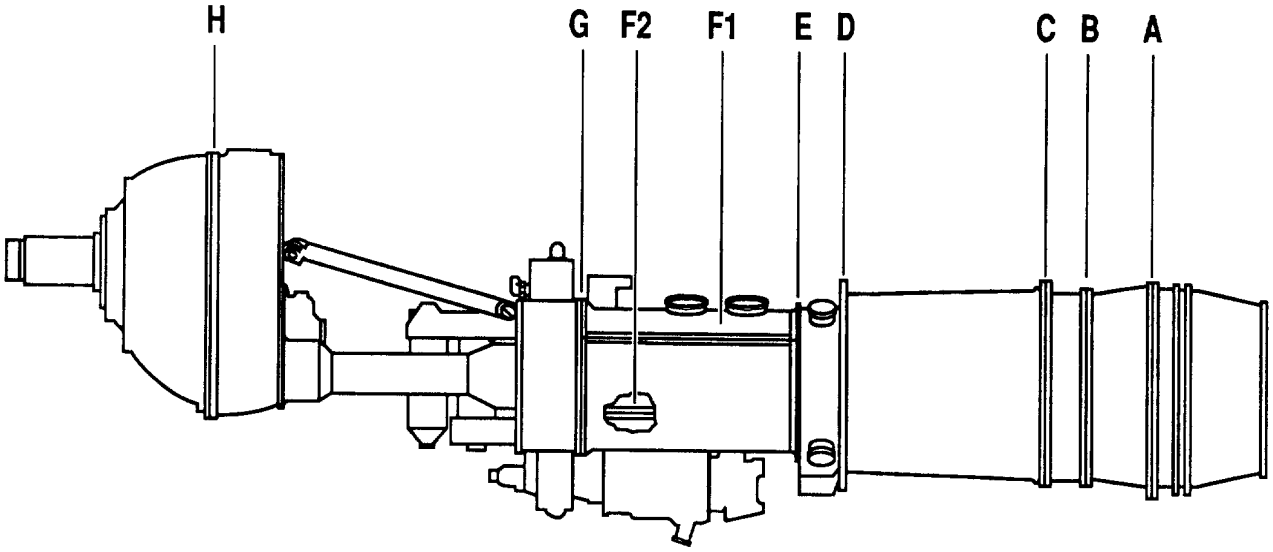

Figure 1. Complete Engine Assembly Splitline Locations and Identification

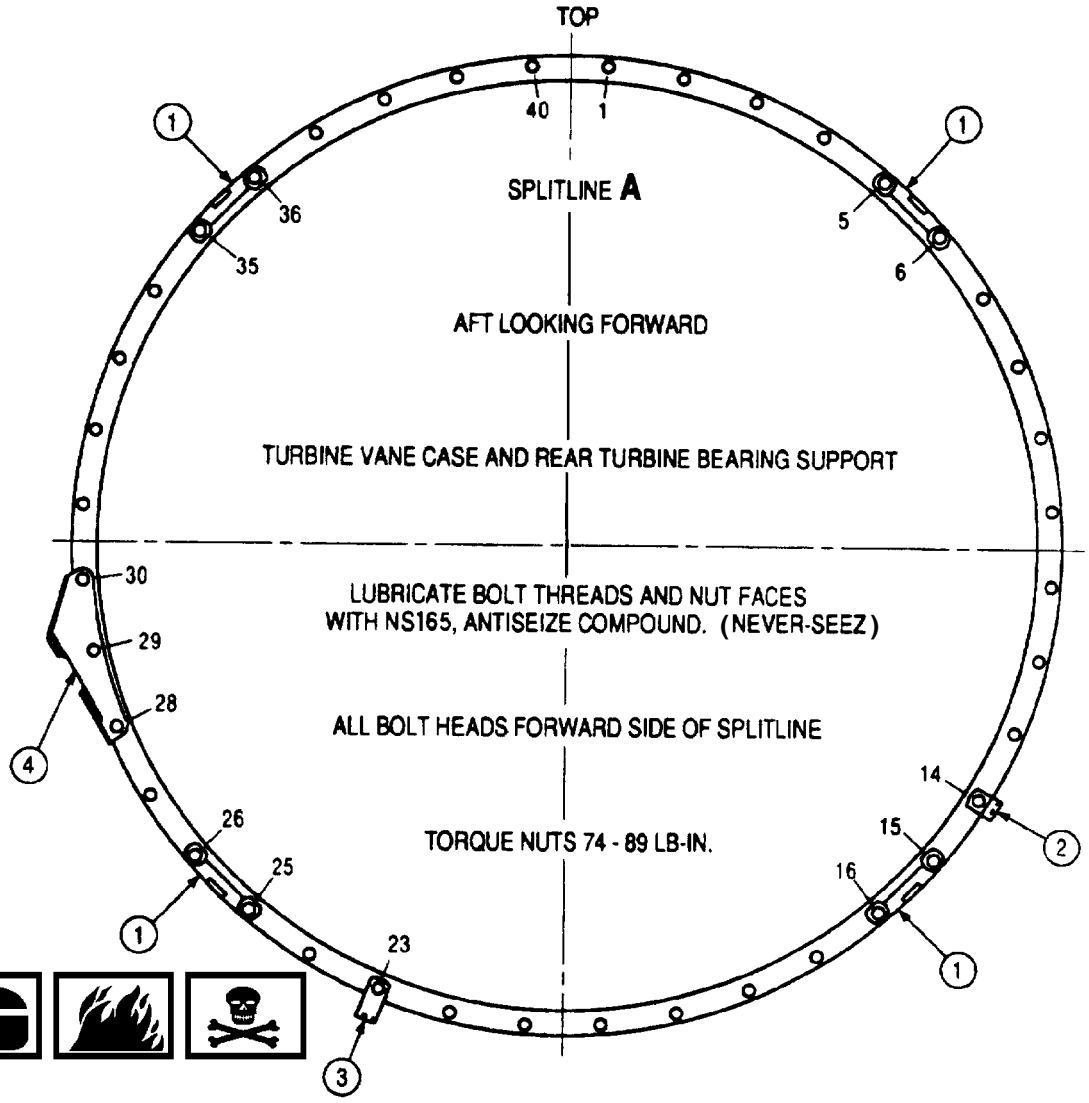

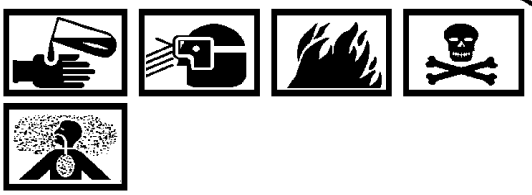

Nickel Antiseize Compound, NS165 (Never Seez) 1

KEY/BRACKET ITEM	PART NUMBER	ANGLE DIRECTION	REMARKS
1	23007557	FWD	PN 23034162-2 BOLT IN HOLES 5, 6, 15, 16, 25, 26, 35 AND 36.
2	MS9601-018	FWD	PN 23034162-2 BOLT IN HOLE 14.
3	MS9601-172	FWD	PN 23034162-2 BOLT IN HOLE 23.
4	23052026	AFT	PN 23034162-2 BOLT IN HOLES 28, 29, AND 30.

NOTES:
1. USE PN 23034162-1 BOLT AT ALL OTHER LOCATIONS.
2. USE PN 6846184-428 OR 6848403-428 NUT AT ALL LOCATIONS.

Figure 2. Splitline A

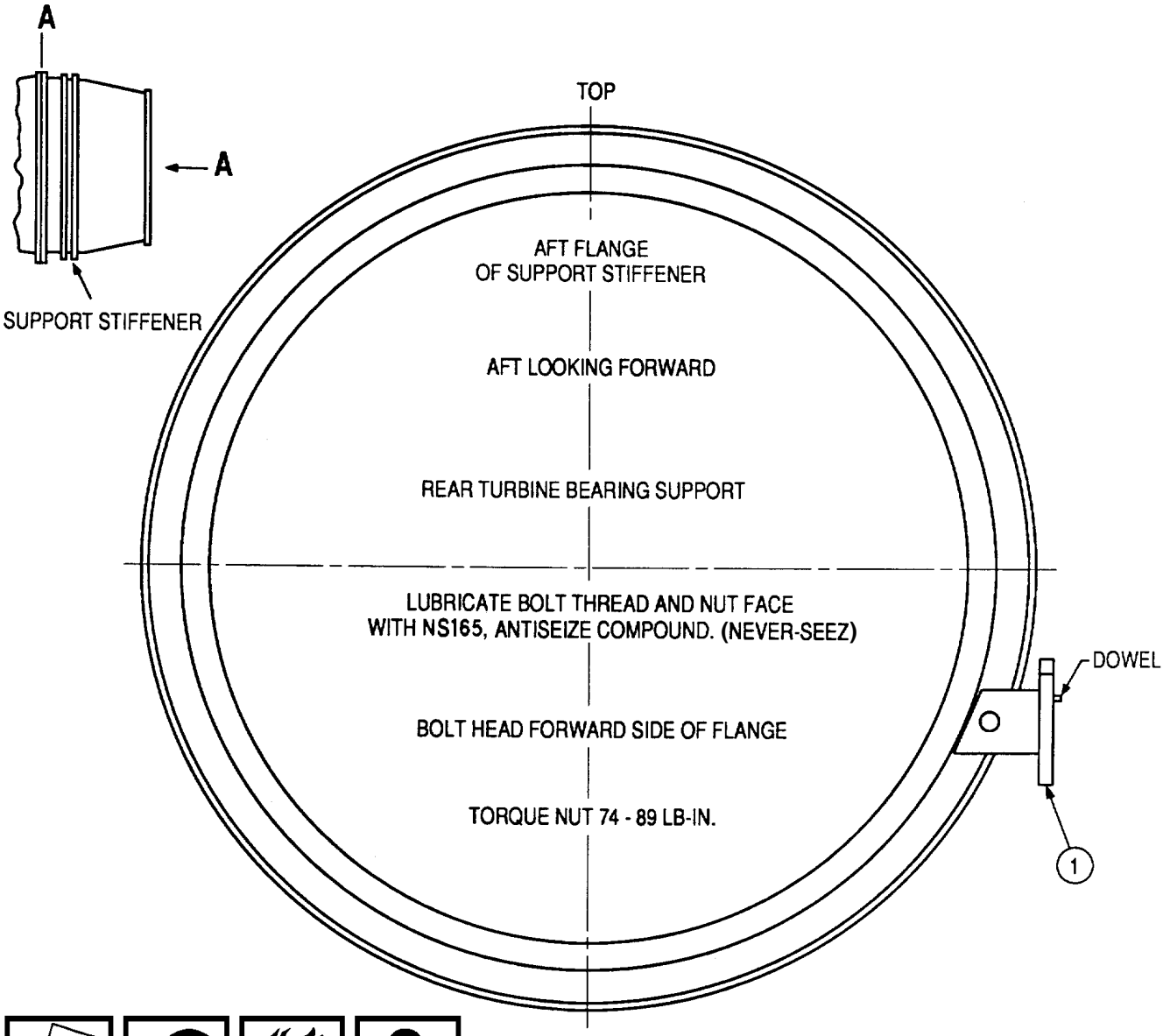

Nickel Antiseize Compound, NS165 (Never Seez) 1

BRACKET ITEM	PART NUMBER	ANGLE DIRECTION	REMARKS
1	23032682	DOWEL UP	PN 6840383-13 BOLT AND PN 6846184-428 OR 6848403-428 NUT.

Figure 3. Aft Flange of Rear Turbine Bearing Support Stiffener

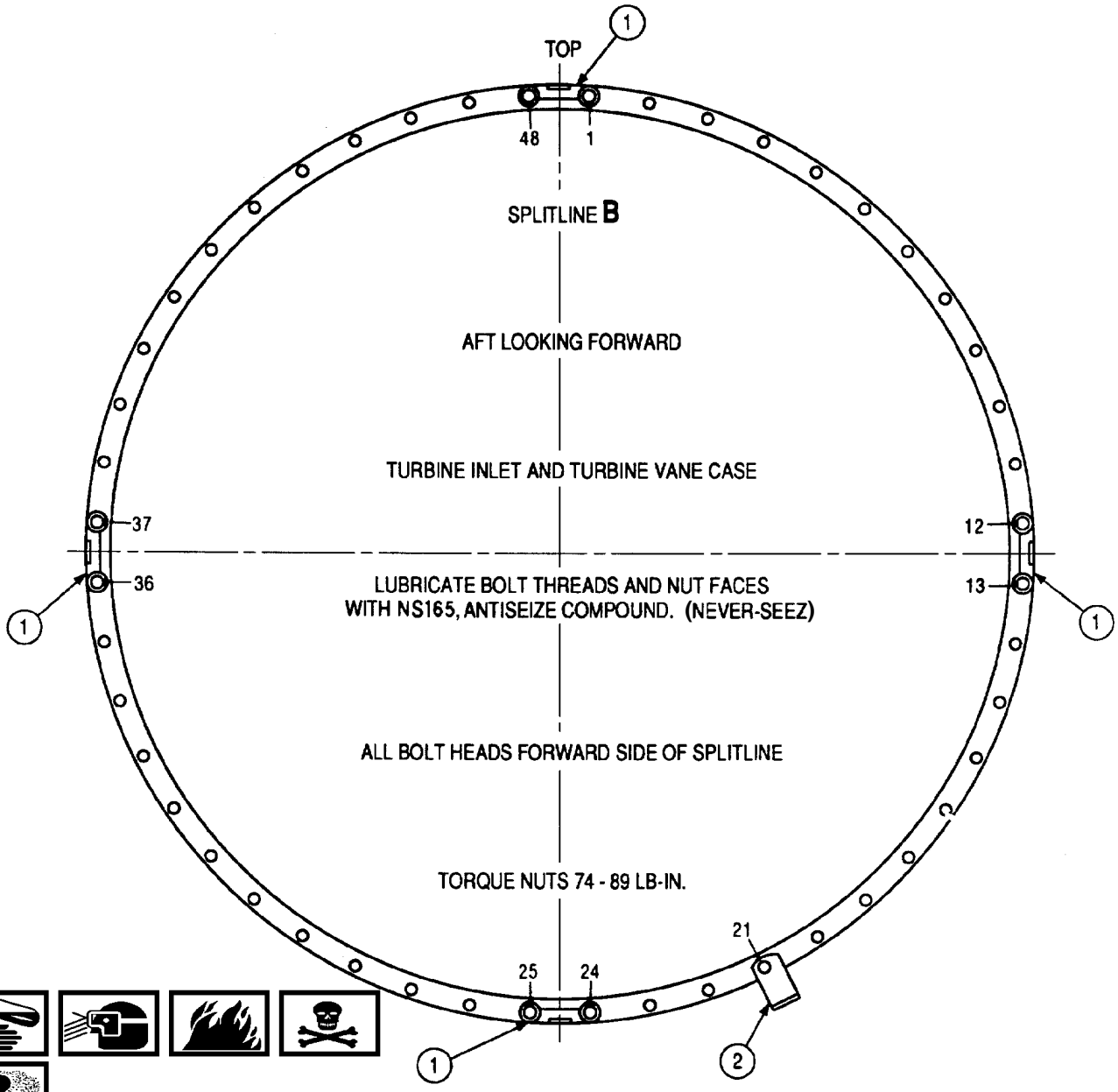

Nickel Antiseize Compound, NS165 (Never Seez) 1

KEY/BRACKET ITEM	PART NUMBER	ANGLE DIRECTION	REMARKS
1	6859014	FWD	PN 6840383-16 BOLT IN HOLES 1, 12, 13, 24, 25, 36, 37, AND 48.
2	23032695	AFT	PN 6840383-16 BOLT IN HOLE 21.

NOTES :
1. USE PN 6840383-13 BOLT AT ALL OTHER LOCATIONS.
2. USE PN 6846184-428 OR 6848403-428 NUT AT ALL LOCATIONS.

Figure 4. Splitline B

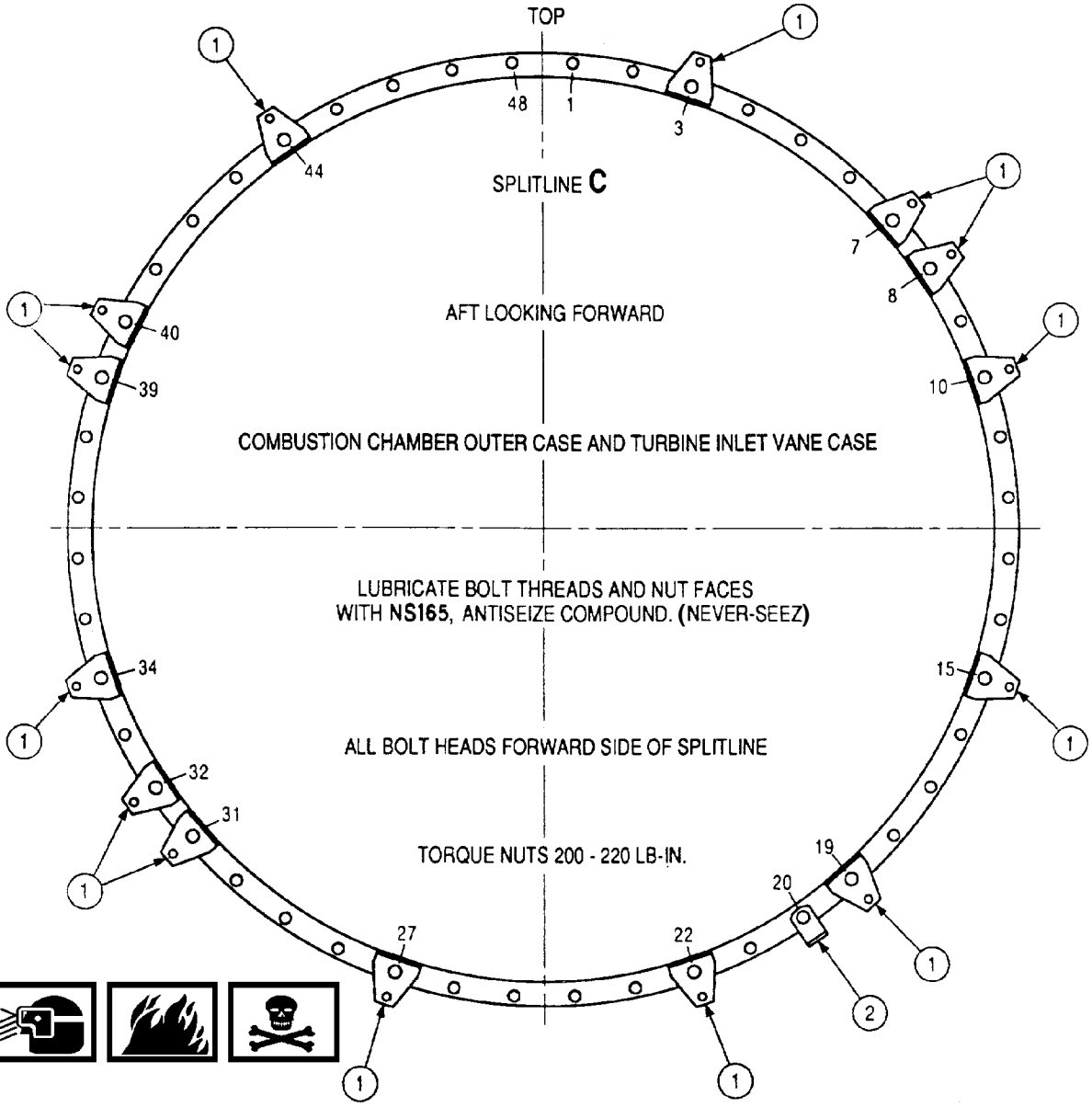

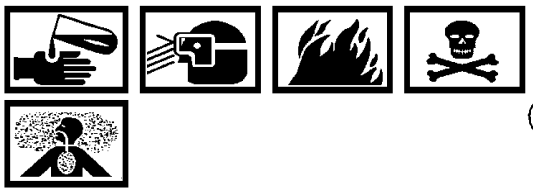

Nickel Antiseize Compound, NS165 (Never Seez) **1**

BRACKET ITEM	PART NUMBER	ANGLE DIRECTION	REMARKS
1	23032693	AFT	PN 23007595-17 BOLT IN HOLES 3, 7, 8, 10, 15, 19, 22, 27, 31, 32, 34, 39, 40 AND 44.
2	MS9602-134	AFT	PN 23007595-17 BOLT IN HOLE 20.

NOTES :
1. USE PN 23007595-16 BOLT AT ALL OTHER LOCATIONS.
2. USE PN 6843618-054, 6828831-524 OR 6859746-524 NUT AT ALL LOCATIONS.

Figure 5. Splitline C

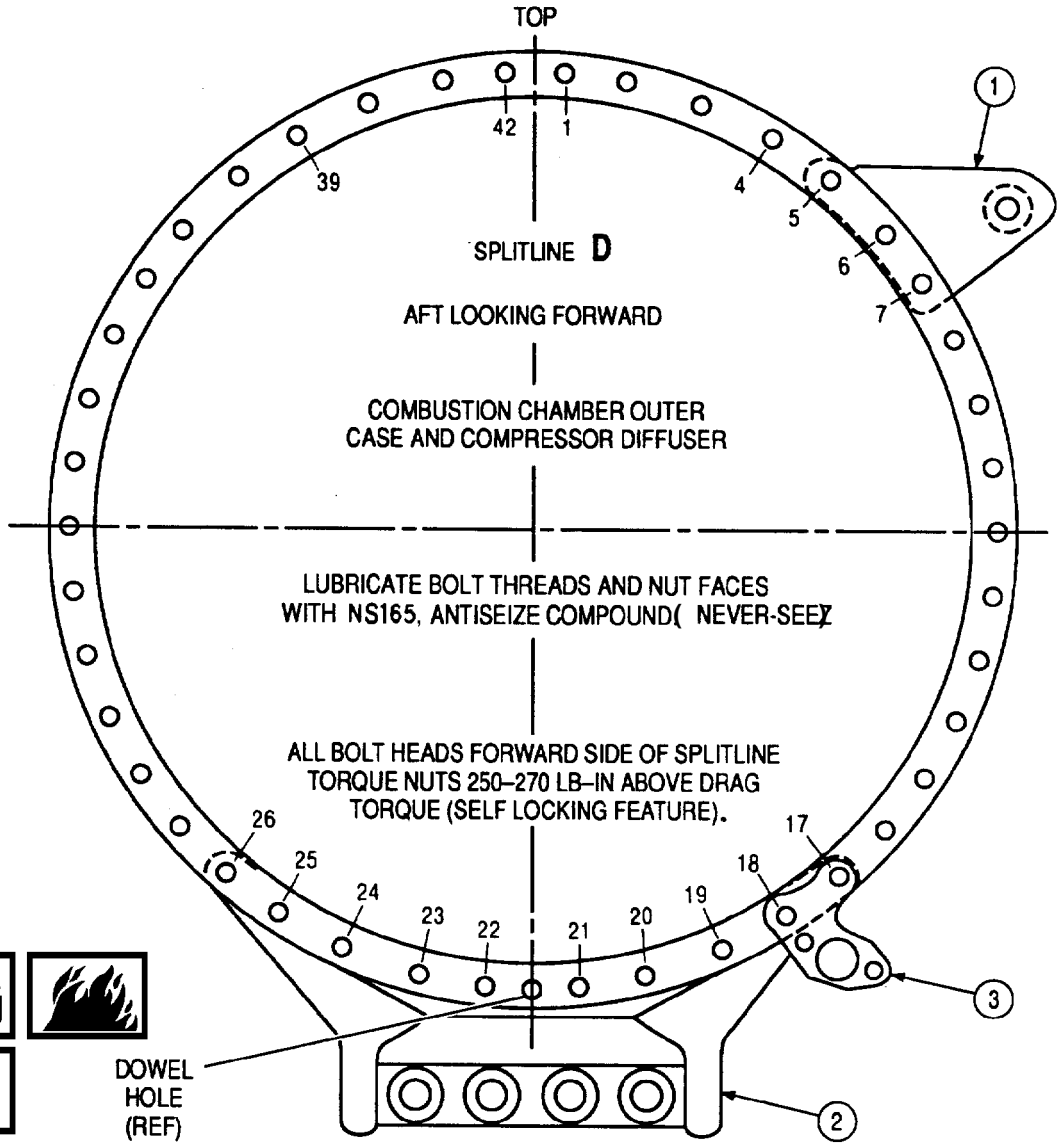

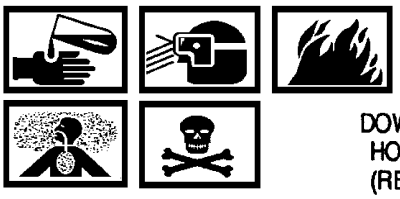

Nickel Antiseize Compound, NS165 (Never Seez) 1

BRACKET ITEM	PART NUMBER	ANGLE DIRECTION	REMARKS
1	23035936	FWD	PN 23007593-1418 BOLT IN HOLES 5, 6, AND 7. LEAVE BOLTS LOOSE FOR ALIGNMENT OF PILOTED BOLT.
2	6829890	FWD	PN 23007593-1418 BOLT IN HOLES 19, 20, 23, 24, AND 26. PN 23007594-1418 BOLT IN HOLES 21, 22, AND 25.
3	23032690	FWD	PN 23007594-1420 BOLT IN HOLES 17 AND 18. THESE BOLTS PASS THROUGH BRACKET 2.

NOTES :
1. USE PN 23007594-1414 BOLT IN HOLES 4 AND 39.
2. USE PN 23007593-1414 BOLT AT ALL OTHER LOCATIONS.
3. USE PN 6843618-054, 6828831-524, OR 6859746-524 NUT AT ALL LOCATIONS.

Figure 6. Splitline D

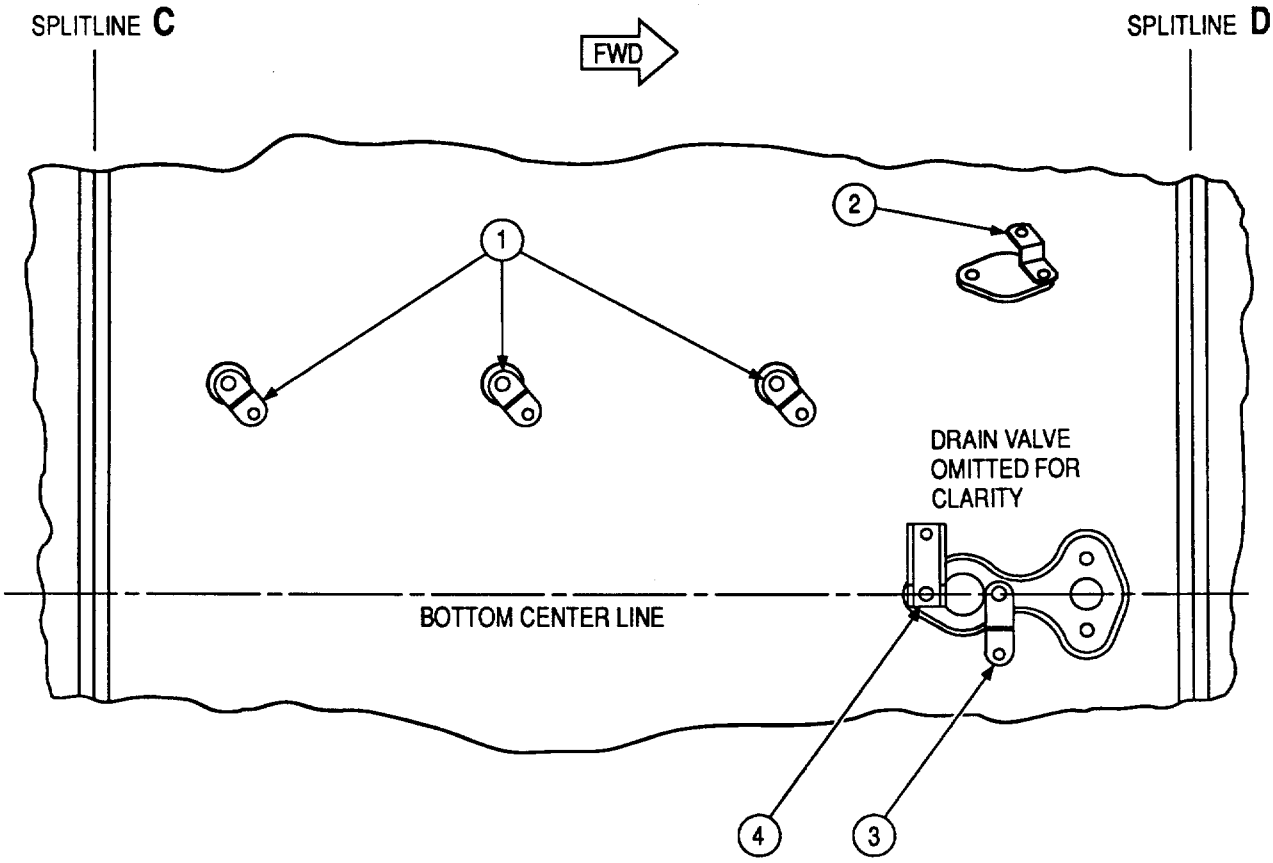

BRACKET ITEM	PART NUMBER	ANGLE DIRECTION	REMARKS
1	23032672	DOWN/INBD 40° FWD	PN 6871603-05 BOLT.
2	6747015	DOWN/OUTBD 40° AFT	PN 6871603-09 BOLT.
3	6747015	DOWN	PN 6871603-09 BOLT.
4	6846904	DOWN	PN 6871603-09 BOLT.

NOTES :
1. LUBRICATE BOLT THREADS WITH NS165 ANTISEIZE COMPOUND. (NEVER-SEEZ)
2. ANGLES ARE APPROXIMATE; ADJUST AS NECESSARY.
3. TORQUE BOLTS 70-85 LB-IN.
4. LOCKWIRE BOLTS WITH PN MS20995C32 WIRE.

Nickel Antiseize Compound, NS165 (Never Seez) 1

Figure 7. Combustion Chamber Outer Case Bottom View

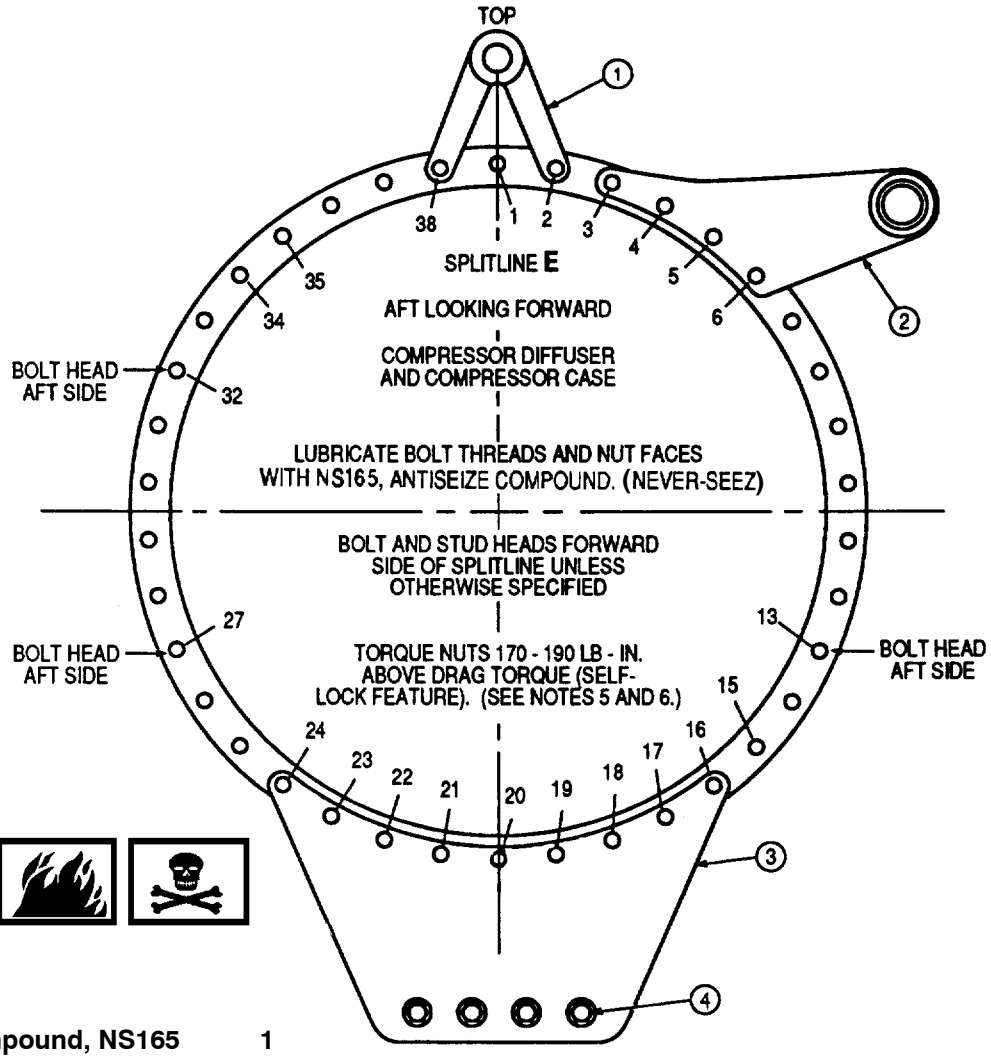

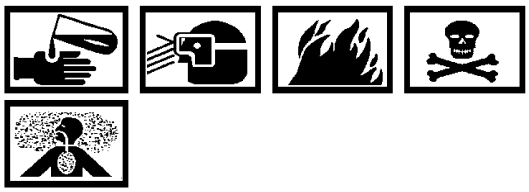

Nickel Antiseize Compound, NS165 (Never Seez) 1

BRACKET ITEM	PART NUMBER	ANGLE DIRECTION	REMARKS
1	23007940		PN 6871521-13 BOLT IN HOLES 2 AND 38.
2	23035935	AFT	PN 6871521-14 BOLT IN HOLE 3 AND PN 6871521-13 BOLT IN HOLES 4, 5, AND 6.
3	6829546	—	PN 6871526-13 BOLT IN HOLE 16. PN 6871521-13 BOLT IN HOLES 17, 18, 21, 23, AND 24. PN 6871548 SHOULDER STUD IN HOLES 19, 20, AND 22.
4	—	—	PN 6828763 BOLTS, 6706277 WASHERS, 6828769 OR 6818682-624 NUTS. LOCATE BOLT HEADS AFT SIDE

NOTES :
1. USE PN 6871521-11 BOLT IN HOLES 13, 27, AND 32. LOCATE HEADS AS SPECIFIED.
2. USE PN 6871527 BOLT IN HOLES 15, 34, AND 35.
3. USE PN 6871521-11 BOLT IN REMAINING HOLES (17 PLACES).
4. USE PN 6784457-054 OR 6749294-524 NUT AT ALL LOCATIONS.
5. USE PN MS21043-4 NUT ON STUDS AT HOLES 19 AND 20. TORQUE NUTS 74 - 89 LB-IN.
6. TORQUE PN 6828769 OR 6818682-624 NUT 265 - 300 LB-IN. (4 PLACES).

Figure 8. Splitline E

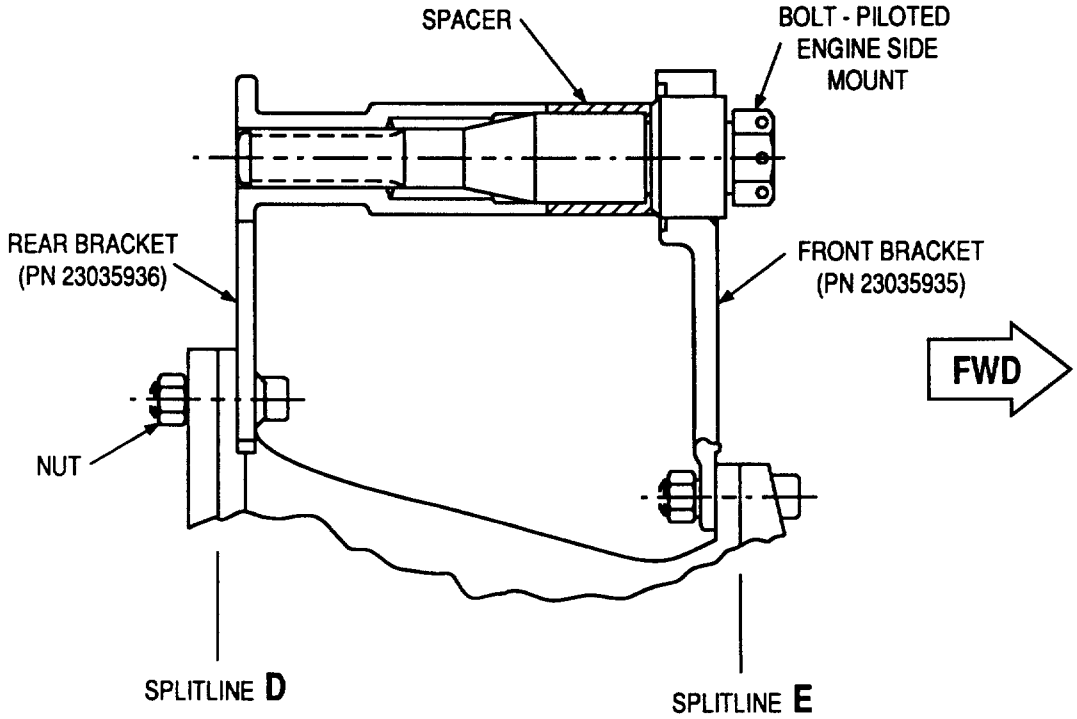

1. INSTALL PILOTED BOLT AND VERIFY REAR BRACKET ALIGNMENT AS FOLLOWS :

   A. IF NECESSARY, LOOSEN NUTS AT REAR BRACKET 1 - 1 1/2 TURNS. REAR BRACKET MUST BE LOOSE.

   Nickel Antiseize Compound, NS165 (Never Seez) **1**

   B. APPLY A COMPLETE UNIFORM COATING OF NS165 ANTI-SEIZE COMPOUND (NEVER-SEEZ) TO FOLLOWING SURFACES.
      (1) THREADS AND BORE OF REAR BRACKET
      (2) BORE OF FRONT BRACKET
      (3) THREADS, SHANK AND SHOULDER OF PILOTED BOLT.

   C. WITHOUT SPACER; INSTALL AND THREAD PILOTED BOLT INTO REAR BRACKET UNTIL FULLY SEATED (END IS VISIBLE AT FACE OF BRACKET).

   D. TORQUE REAR BRACKET NUTS 250–270 LB–IN ABOVE DRAG TORQUE (SELF LOCKING FEATURE).

   E. LOOSEN AND REMOVE PILOTED BOLT. BOLT SHALL BACK OUT FREELY.

   NOTE:

   THE TORQUE VALUE IN FOLLOWING STEP APPLIES ONLY TO ENGINE ASSEMBLY.

   F. IF BOLT BACKED OUT FREELY, INSTALL SPACER AND BOLT. TORQUE BOLT 480 – 720 LB – IN. AND LOCKWIRE WITH PN MS20995C32 WIRE.

   G. IF BOLT DOES NOT BACK OUT FREELY, LOOSEN REAR BRACKET AND REMOVE BOLT. CHECK FOR GALLING AND LUBRICATION OF SURFACES PER STEP B.

   H. REPEAT STEPS C., D., E., AND F.

Figure 9. Engine Side Mount Piloted Bolt Installation

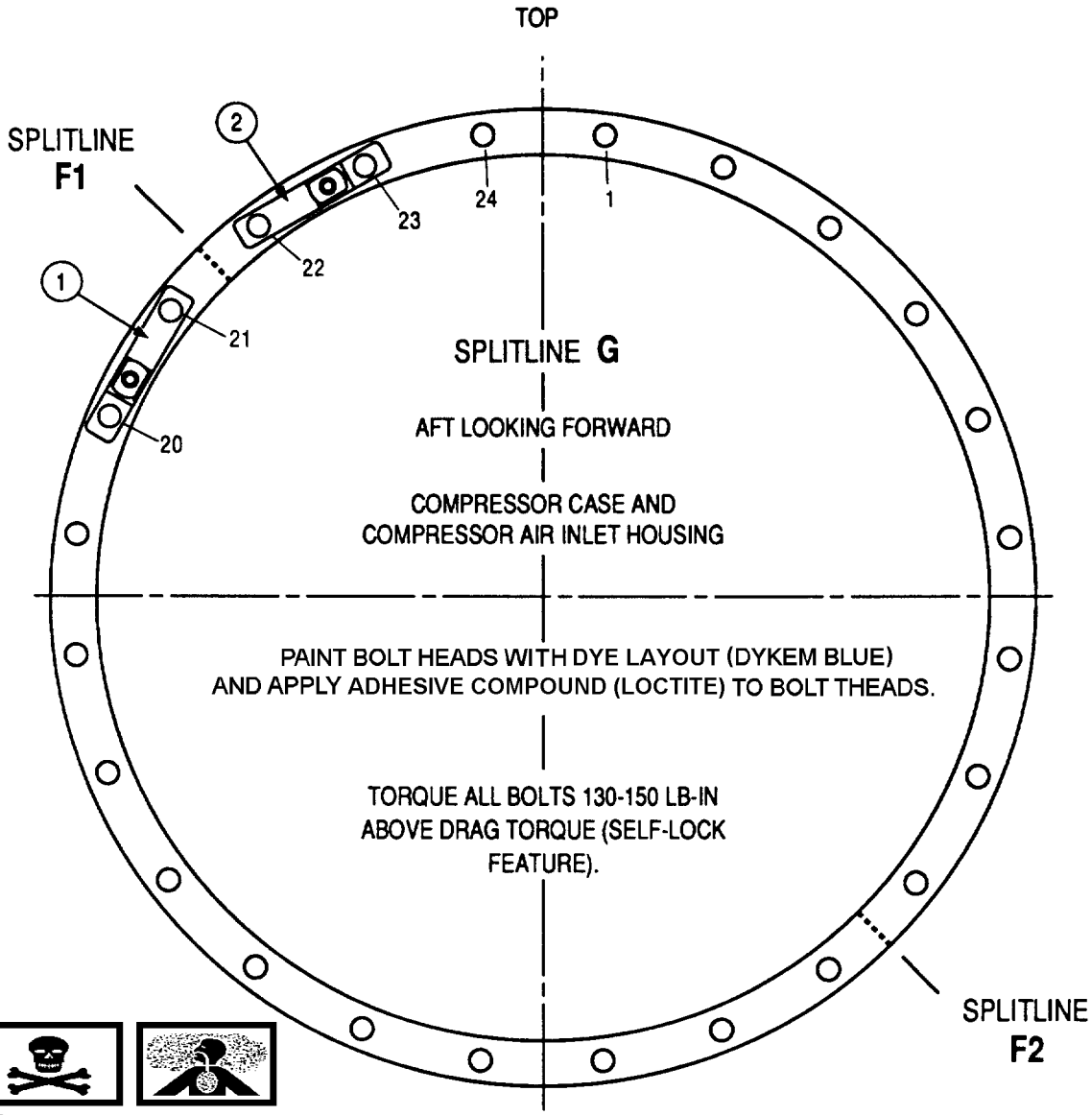

Adhesive/Sealant 2
222, or 42540 (Loctite)

Dye Layout (Dykem Blue) 3

ADAPTER ITEM	PART NUMBER	ANGLE DIRECTION	REMARKS
1	23031164	—	PN MS9210-13 BOLT IN HOLES 20 AND 21. LOCATE ADAPTER WITH STUD TOWARD HOLE 20.
2	23031164	—	PN MS9210-13 BOLT IN HOLES 22 AND 23. LOCATE ADAPTER WITH STUD TOWARD HOLE 23.
NOTES : 1. USE PN MS9210-08 BOLT IN REMAINING HOLES.			

Figure 10. Splitline G

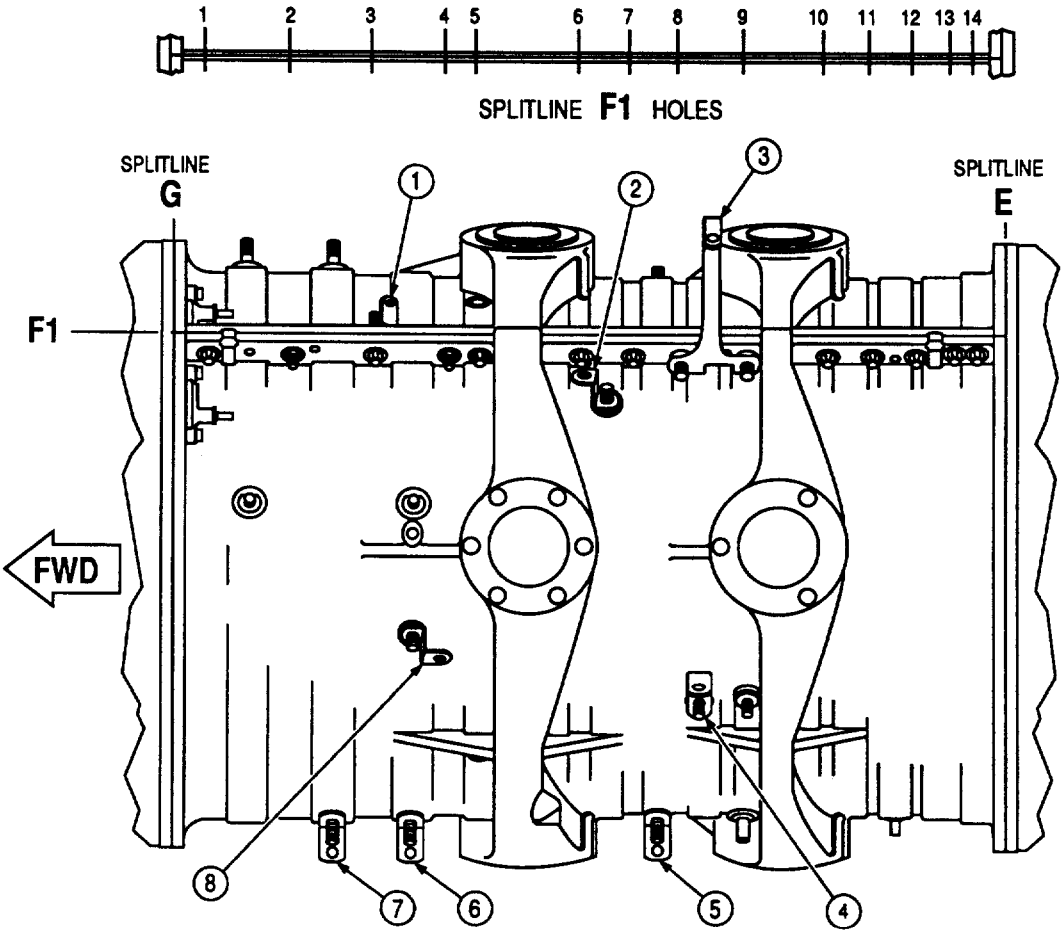

BRACKET ITEM	PART NUMBER	ANGLE DIRECTION	REMARKS
1	MS9593-068	UP/45° AFT	
2	23033321	UP/FWD	
3	23032681	UP/OUTBD	USE 6782262-428 OR 6782886-428 OR 6782887-428 NUTS.
4	MS9601-010	DOWN/OUTBD	LEAVE NUT LOOSE. COORDINATOR CONTROL SUPPORT LOCATES UNDER THIS BRACKET.
5	MS9601-307	DOWN/INBD	
6	MS9601-216	DOWN/INBD	
7	MS9601-305	DOWN/INBD	
8	23033321	OUTBD/AFT	

NOTES :
1. LUBRICATE STUD THREADS AND NUT FACES WITH NS165 ANTISEIZE COMPOUND. (NEVER-SEEZ)
2. USE MS21043-4 NUT UNLESS OTHERWISE SPECIFIED.
3. ANGLE IS APPROXIMATE; ADJUST AS NECESSARY.
4. TORQUE ALL NUTS 74 - 89 LB-IN.

Nickel Antiseize Compound, NS165 (Never Seez) 1

Figure 11. Splitline F1 and Left Side of Compressor Case (Sheet 1 of 2)

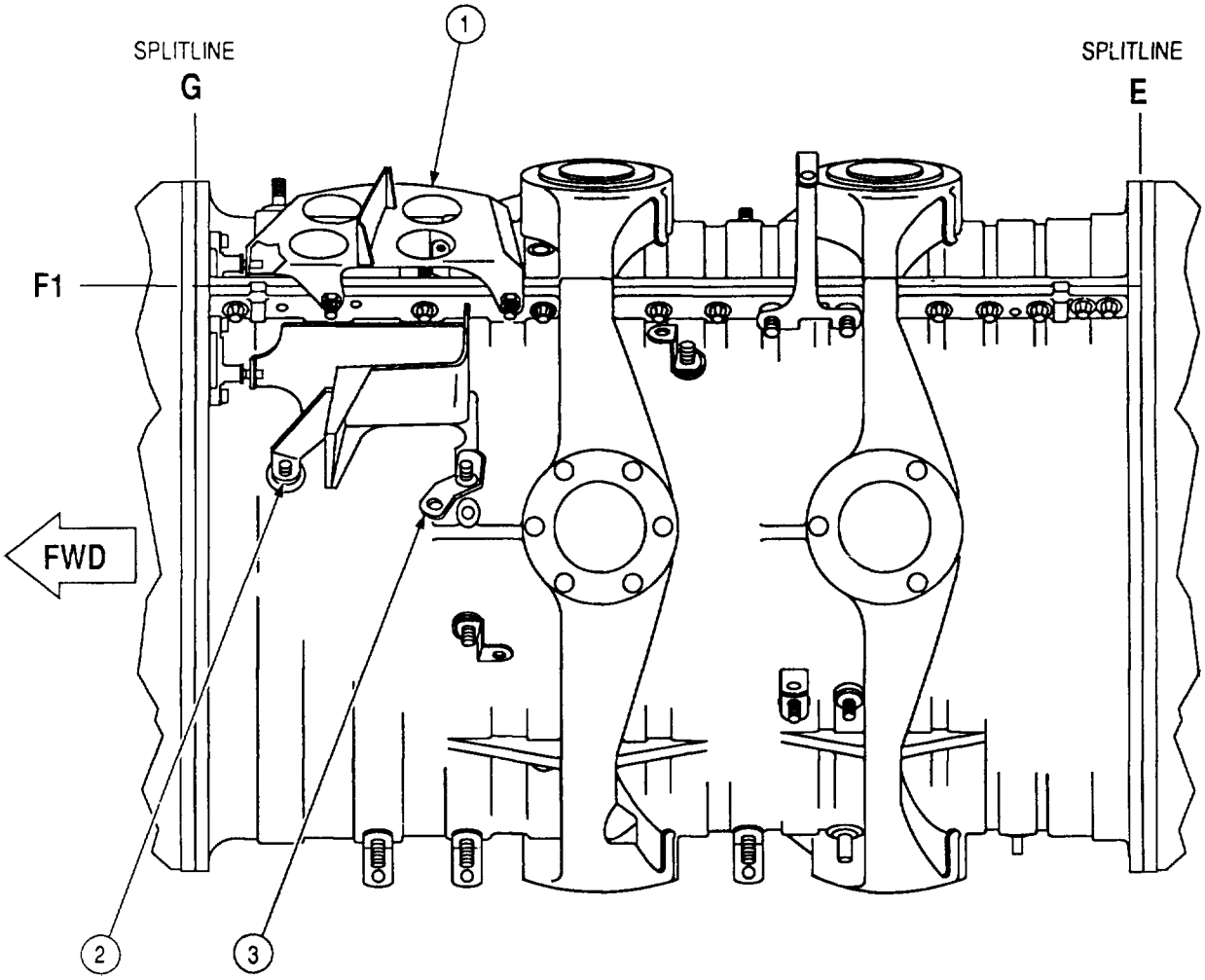

BRACKET ITEM	PART NUMBER	ANGLE DIRECTION	REMARKS
1	23007473	—	INSTALL AFTER COMPRESSOR PRESSURE OIL TUBE IS INSTALLED.
2	23031840	—	INSTALL AFTER SPEED SENSING VALVE HOSE AND ANTI-ICING AIR TUBE ARE INSTALLED.
3	6747015	OUTBD/30° FWD	INSTALL OVER LEG OF BRACKET 2.

NOTES :
1. LUBRICATE STUD THREADS AND NUT FACES WITH **NS165** ANTISEIZE COMPOUND. (NEVER-SEEZ)
2. ANGLE IS APPROXIMATE; ADJUST AS NECESSARY.
3. USE MS21043-4 NUTS.
4. TORQUE ALL NUTS 74 - 89 LB-IN.

Nickel Antiseize Compound, NS165 (Never Seez) 1

Figure 11. Splitline F1 and Left Side of Compressor Case (Sheet 2)

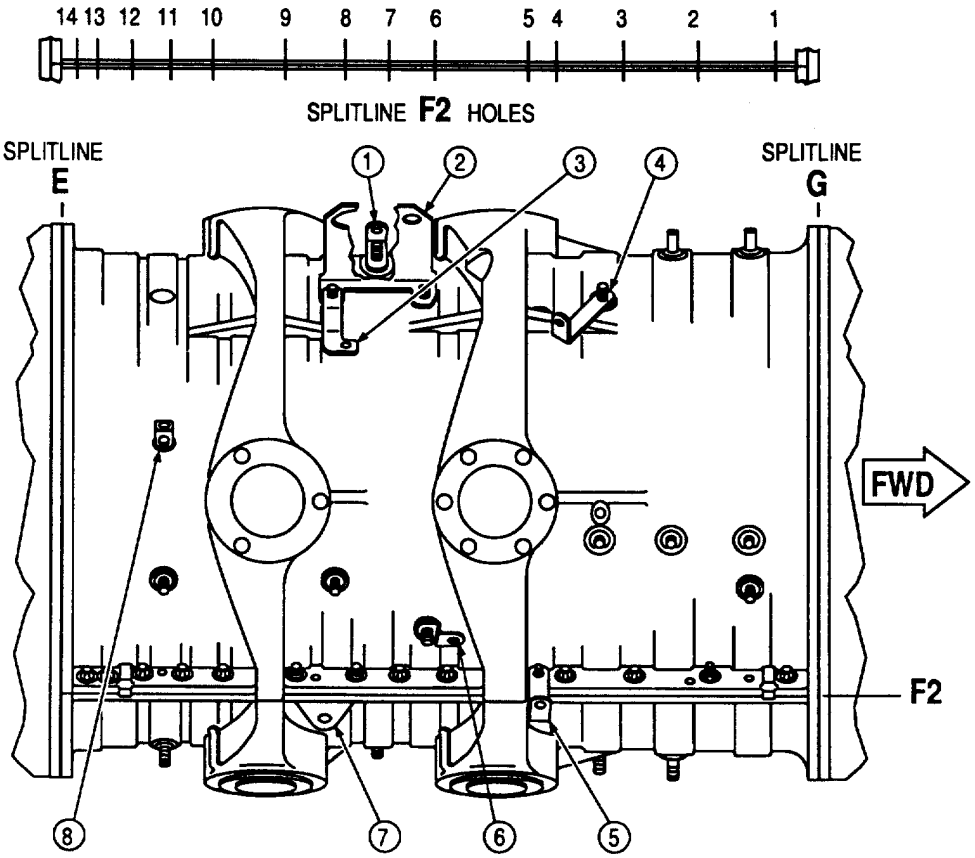

BRACKET ITEM	PART NUMBER	ANGLE DIRECTION	REMARKS
1	MS9601-219	UP/INBD	
2	23032660	UP/INBD	
3	23037374	UP/FWD	INSTALL OVER LEG OF BRACKET 2.
4	MS9601-430	UP/30° AFT	
5	MS9601-368	UP	
6	23033321	OUTBD/FWD	USE PN 6784457-048 OR 6749294-428 NUT.
7	23031968	—	
8	MS9601-219	UP/OUTBD	

NOTES :
1. LUBRICATE STUD THREADS AND NUT FACES WITH NS165 ANTISEIZE COMPOUND. (NEVER-SEEZ)
2. ANGLE IS APPROXIMATE; ADJUST AS NECESSARY.
3. USE PN MS21043-4 NUT UNLESS OTHERWISE SPECIFIED.
4. TORQUE ALL NUTS 74 - 89 LB-IN.

Nickel Antiseize Compound, NS165 (Never Seez) 1

Figure 12. Splitline F2 and Right Side of Compressor Case (Sheet 1 of 2)

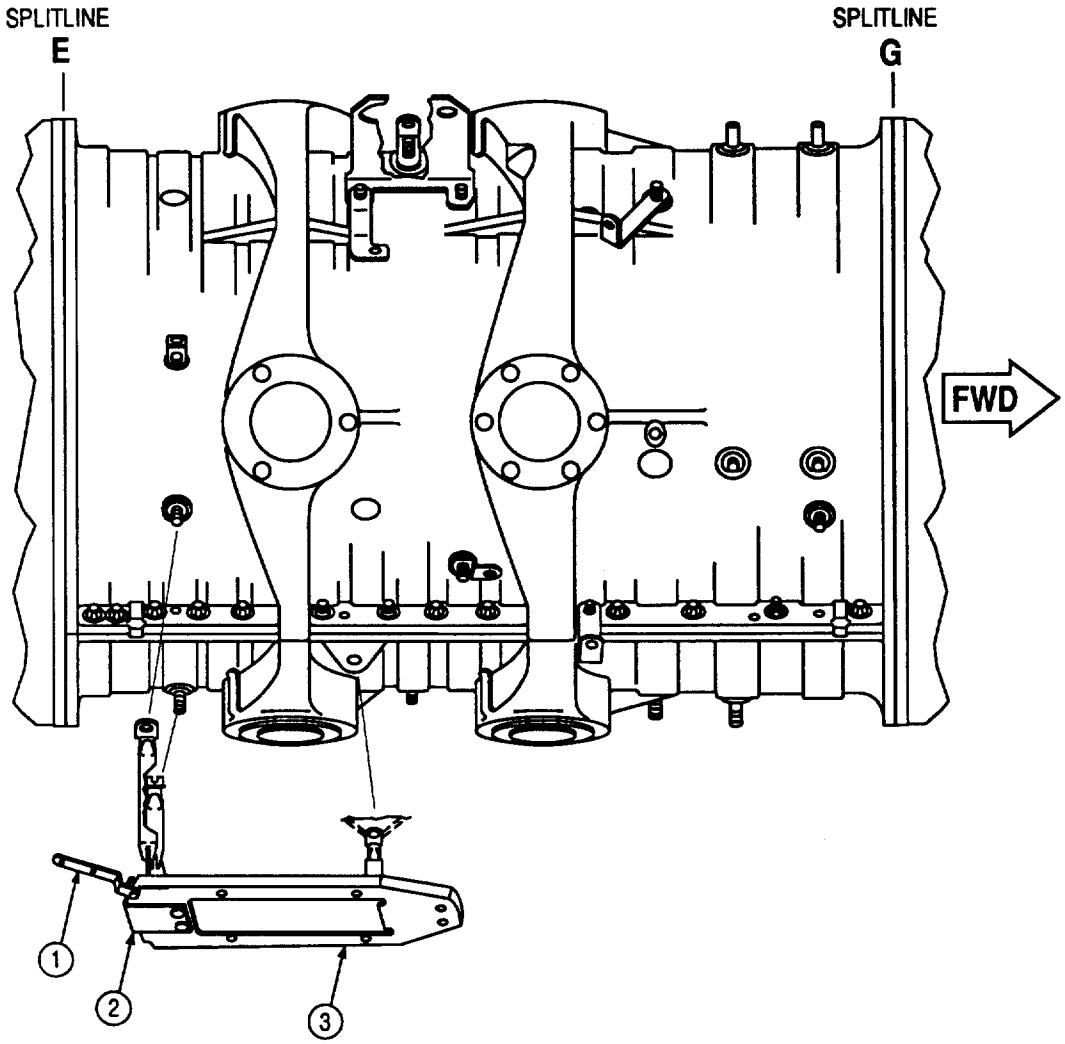

BRACKET ITEM	PART NUMBER	ANGLE DIRECTION	REMARKS
1	6827081	INBD/AFT	USE A TEMPORARY 5/16 X 24 BOLT. TORQUE BOLT 140 - 170 LB-IN. APPROPRIATE BOLT FOR THIS LOCATION IS QEC DETAIL.
2	23033774	INBD	USE PN MS9490-07 BOLT. TORQUE BOLTS 74 - 89 LB-IN.
3	23037379	—	USE PN MS9209-07 BOLT AND PN 6784457-048 OR 6749294-428 NUT AT FORWARD LEG. USE PN MS9320-10 WASHER AND PN 6784457-048 OR 6749294-428 NUT AT LOWER AFT LEG. USE 6784457-048 OR 6749294-428 NUT AT UPPER AFT LEG. TORQUE NUTS 74 - 89 LB-IN.

NOTE: 1. LUBRICATE BOLT AND STUD THREADS AND NUT FACES WITH NS165 ANTISEIZE COMPOUND. (NEVER-SEEZ)

Nickel Antiseize Compound, NS165 (Never Seez) 1

Figure 12. Splitline F2 and Right Side of Compressor Case (Sheet 2)

INTERMEDIATE MAINTENANCE

EXTERNAL ENGINE COMPONENT INSTALLATION

TURBOPROP ENGINE

MODEL T56–A–427

Reference Material

Intermediate Maintenance . . . . . NAVAIR 02B–5DG–6–1

Alphabetical Index

Subject	Page No.
External Engine Components	1
Introduction	1

37. INTRODUCTION.

38. This work package (WP) provides the list of external engine components (accessories, valves, gearbox, etc) that must be installed before the installation of external engine tubing and cabling.

39. EXTERNAL ENGINE COMPONENTS.

40. For installation of components, refer to NAVAIR 02B–5DG–6–1 and the applicable maintenance WP. The following components are included.

- Accessory drive housing (gearbox)
- Anti–icing air valves
- Compressor bleed air collectors
- Compressor bleed air valves
- Compressor bleed air filter
- Coordinator Control
- Cyclone breather
- Electric piezo accelerometers
- Fuel control
- Fuel flow limiting valve
- Fuel nozzles
- Fuel Pump
- Ignition exciter
- Low pressure fuel filters
- Manifold drain valve
- Spark igniters
- Turbine interstage thermocouples

INTERMEDIATE MAINTENANCE

EXTERNAL TUBING AND CABLING INSTALLATION

TURBOPROP ENGINE

MODEL T56–A–427

Reference Material

Bracket Installation . . . . . WP 004 00
External Engine Component Installation . . . . . WP 005 00

Alphabetical Index

Subject	Page No.
Engine Zones Figure (Description)	2
External Engine Components (Installation)	2
Figures	
Engine Left Side View (Sequence Numbers) – Figure 2	7
Engine Right Side View (Sequence Numbers) – Figure 3	13
Engine Bottom View (Sequence Numbers) – Figure 4	17
Engine Zones – Figure 5	21
Example of Index Codes – Figure 1	4
Zone 1 Detail View – Figure 6	22
Zone 2 Detail View – Figure 7	24
Zone 3 Detail View – Figure 8	26
Zone 4 Detail View – Figure 9	28
Zone 5 Detail View (Complete Zone) – Figure 10, Sheet 1	30
Zone 5 Detail View (Upper Half) – Figure 10, Sheet 2	31
Zone 5 Detail View (Lower Half) – Figure 10, Sheet 3	33
Zone 6 Detail View – Figure 11	35
Zone 7 Detail View – Figure 12	37
Zone 8 Detail View – Figure 13	39
Zone 9 Detail View – Figure 14	41
Zone 10 Detail View – Figure 15, Sheet 1	43
Zone 10 Detail View – Figure 15, Sheet 2	45
Zone 11 Detail View – Figure 16	47
Zone 12 Detail View – Figure 17	49

Alphabetical Index (contd)

Subject	Page No.
Figures (contd)	
Zone 13 Detail View – Figure 18	51
Zone 14 Detail View – Figure 19	53
Zone 15 Detail View – Figure 20	55
Installation Procedures, Support Equipment and Materials Required	
Installation Procedures	3
Support Equipment and Materials Required	3
Introduction	2
Quality Assurance Requirements	2

Record of Applicable Technical Directives

Type/No.	Date	Title and Ecp No.	Date Inc.	Remarks
PPC–110	12/31/99	Fuel Enrichment System Removal (ECP 2104)	7/15/04	—

41. **INTRODUCTION.**

42. This work package (WP) contains general instructions and specific detailed illustrations for installation of external engine tubing, hoses, electrical harnesses and clamping hardware. There is no procedural text provided to install specific parts, all requirements are provided in the zone detail illustrations.

43. **EXTERNAL ENGINE COMPONENTS.**

44. External engine components (fuel control, fuel pump, anti–icing valves, etc) shall be installed, except the left and right side compressor bleed air collectors, before installation of the external engine tubing, hoses, and electrical harnesses. The air collectors will be installed after the tubing located between the collectors and compressor case are installed. Refer to WP 005 00.

45. Brackets attached to external engine components are not installed in this WP. These brackets however are referenced in the zone detail illustrations to indicate they are part of the clamping arrangement (stackup).

46. **QUALITY ASSURANCE REQUIREMENTS.** (Figures 6 through 20)

47. The torque and lockwire requirements, called out by symbols in the zone detail illustrations (figures 6 through 20) shall be witnessed by Quality Assurance personnel as directed by local instructions. If no local instructions are in place, all torque and lockwire procedures shall be witnessed.

48. **FIGURES.**

49. The figures in this WP provide the sequence numbers for order of installation, location and identity of the engine zones and detailed data in the individual engine zones.

50. SEQUENCE NUMBER FIGURES (Figures 2, 3 and 4). The sequence number figures are illustrations of the complete engine left side (figure 2), complete engine right side (figure 3) and partial engine bottom (figure 4). The bottom view does not include the reduction gear and torquemeter units; there are no installation and clamping requirements in this area of the units. Each figure legend contains only those sequence numbers called out in the illustration, therefore the numbers are not consecutive.

51. ENGINE ZONES FIGURE (Figure 5). The engine zones figure is a multi–view illustration of the complete engine left and right sides depicting the engine zones. The zone areas are outlined and identified by a number. Each zone is covered by a separate zone detail figure.

52. ZONE DETAIL FIGURES (Figures 1, 6 through 20). The zone detail illustration for each figure (6 through 20) provides complete data for installation of the sequence number items shown in the applicable figure. The areas not involved with the parts installation are subdued to emphasize the work area. The attaching hardware, torque and lockwire requirements are identified by index codes (symbols). The following are examples of the symbols used to make up the index codes.

4 – This symbol is used as the Index Code for an item of hardware. In this example, the number 4 represents gasket PN 6738108. This code, for this gasket will remain the same in this WP. Each item of hardware will be assigned its peculiar index code.

A – This symbol is used as the Index Code for a torque requirement. In this example, the letter A represents torque value 8–10 lb–in. This code, for this torque value will remain the same in this WP. Each different torque value will be assigned its peculiar index code.

20 – This symbol is used as the Index Code for a lock–wire requirement. In this example, the number 20 represents lockwire PN MS20995C20. This code, for this lockwire will remain the same in this WP. This symbol, with the number 32 will repre–sent lockwire PN MS20995C32.

These hardware index codes appear in illustrations either single or as a group. A single hardware code indicates an item (normally a clamp) that is loose or installed at that location. A group of hardware codes indicate a stackup of items at that location including the torque requirement code. When a lockwire requirement is applicable the appropriate code will be included. Refer to figure 1 for example of index codes.

53. **INSTALLATION PROCEDURES, SUPPORT EQUIPMENT AND MATERIALS REQUIRED.**

54. SUPPORT EQUIPMENT AND MATERIALS REQUIRED. The following support equipment and materials are required to accomplish the work in this WP.

Support Equipment Required

Part No./Type Designation	Nomenclature
MS90387–1	Tool, Strap Installation
–––––	Wrench, Torque (0–150 lb–in.)
–––––	Wrench, Torque (0–500 lb–in.)

Materials Required

Specification No./Part No.	Nomenclature
AS3085–113	Packing, Preformed (1)
MIL–PRF–23699	Oil, lubricating
MIL–PRF–6081 Grade 1010	Oil, lubricating
MS20995C20	Lockwire (0.020 in. dia)
MS20995C32	Lockwire (0.032 in. dia)
23001146–3	Gasket, Metallic C–ring (1)
23008234	Ring Assembly, Piston (AR)
23032357	Gasket, Metallic Thermocouple (14)
6738108	Gasket, Metallic O–ring (4)
6784418–056	Seal, Metallic O–ring (1)
6784418–062	Seal, Metallic O–ring (1)
6784419–4	Seal, Metallic O–ring (1)

55. INSTALLATION PROCEDURES. Observe the following general procedures and requirements during the installation of tubing, hoses, electrical harnesses, fittings and clamping hardware.

a. Thread lubrication requirements.

Lubricating Oil, MIL–PRF–6081 (Grade 1010) **4**

(1) Air System. Apply light coating of fresh MIL–PRF–6081, Grade 1010 oil to preformed packings, male threads of tubing/hose connections and fittings; do not apply oil to the first two threads.

(2) Fuel System. Apply light coating of fresh MIL–PRF–6081, Grade 1010 oil to male threads of tubing/hose connections; do not apply oil to the first two threads.

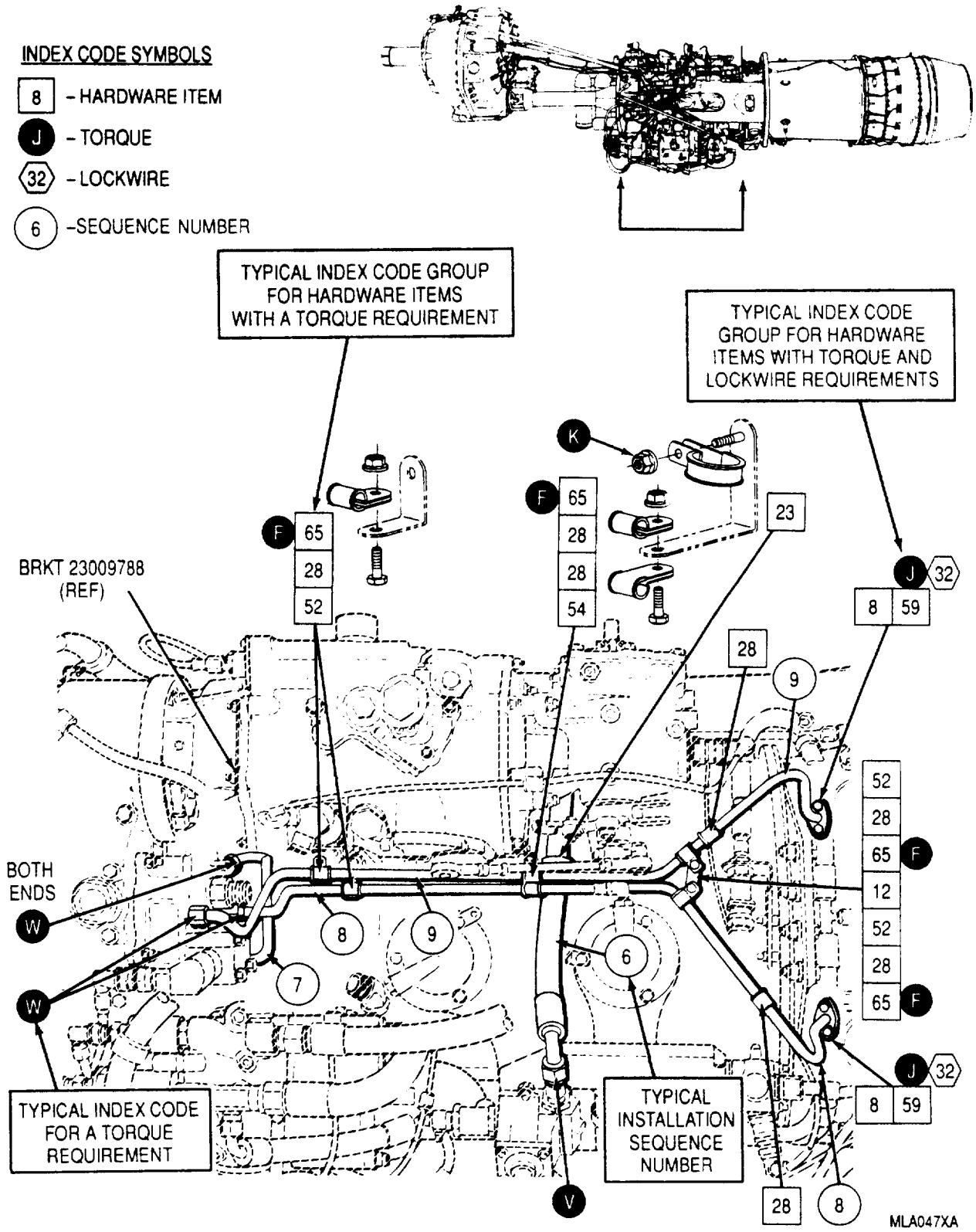

Figure 1. Example of Zone Detail Figure and Typical Index Codes

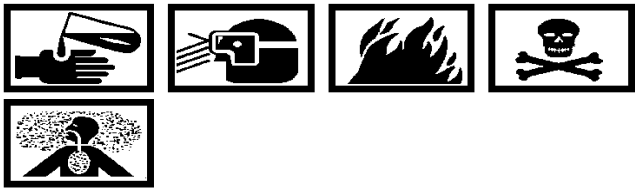

Engine Lubricating Oil, MIL–PRF–23699 5

(3) Oil System. Apply light coating of fresh MIL–PRF–23699 oil to male threads of tubing connections; do not apply oil to the first two threads.

(4) Electrical System. No lubrication is required; all connections are made dry.

(5) Clamping Hardware. Apply a light coating of fresh MIL–PRF–23699 oil to threads of bolts, screws, and bulkhead nuts.

b. Use of torque wrenches.

(1) Use current calibrated torque wrenches to torque all tubing/hose coupling nuts, electrical hex connectors (except knurled), nuts, bolts and screws.

(2) Use standard wrenches to restrain installed fittings from turning when torquing tubing/hose coupling nuts.

(3) Use a standard wrench to restrain the union when torquing tube coupling nuts.

c. Minimum clearances.

(1) Maintain a minimum clearance of 0.098 inch between rigid tubes and all other engine features except anti–icing tubes.

(2) For anti–icing tubes, maintain a minimum clearance of 0.030 inch between the anti–icing tubes, adjacent tubes, hoses and all other engine features.

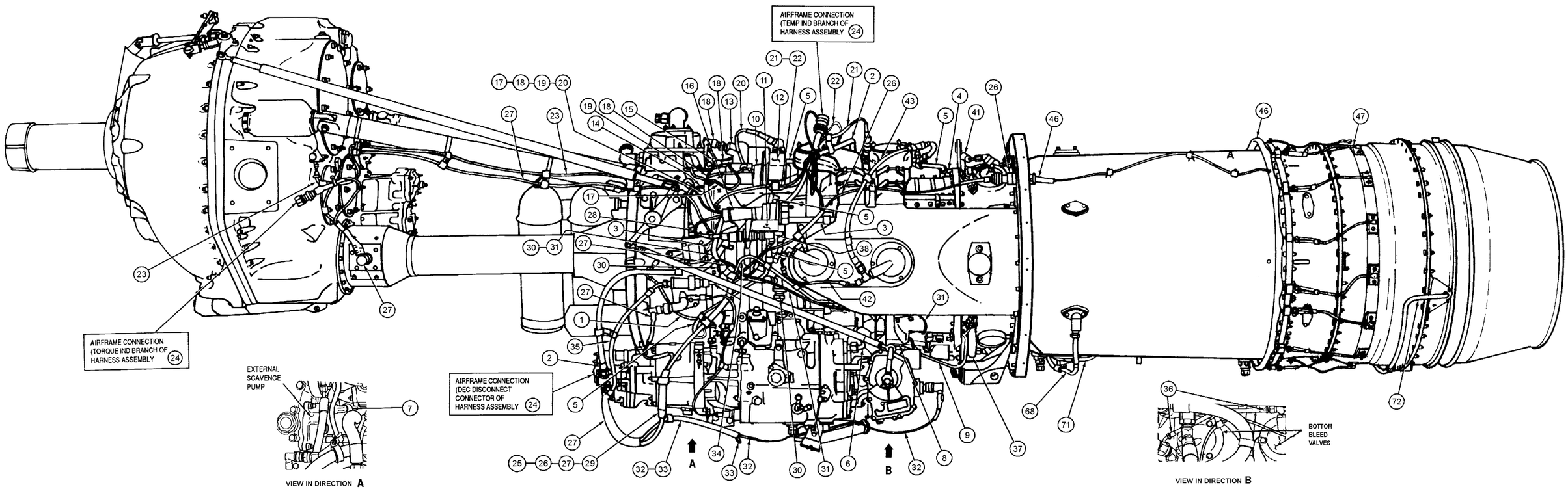

Figure 2. Engine Left Side View

Legend to Figure 2

Seq. No.	Part No.	Nomenclature	Zone Detail Fig. No.
1	6886430E084F244	Hose assembly (inlet air sensing probe fuel control tee)	6
2	6844813–081472 or 6844335–081472 or 6844335–089472 or AE3663661H472	Hose assembly (speed sensing valve to distribution tee)	6, 12
3	23008233	Anti–icing air tube assembly	6, 7
4	23032680	Compressor oil tee	7
5	23007929	Compressor pressure oil tube assembly	6, 7
6	6879880H167F267	Hose assembly (fuel control outlet to fuel flow limiting valve)	7, 8
7	6843446	External scavenge pump out oil tube assembly (view in Direction A)	8
8	23007944	Right–side diffuser to scavenge pump oil tube assembly	8
9	23007948	Left–side diffuser to scavenge pump oil tube assembly	8
10	23007473	Bracket assembly	9
11	23031840	Bracket assembly	9
12	6782647 or 23006292	Ignition relay assembly	9
13	23052049	Anti–icing air solenoid valve assembly	9
14	6886430E064B	Hose assembly (left–hand anti–icing air valve to solenoid valve)	10 (Sheets 1 and 2)
15	6886430E274C	Hose assembly (right–hand anti–icing air valve to solenoid valve)	10 (Sheets 1 and 2), 12
16	23038801	Left–hand branched wiring harness assembly	10 (Sheets 1 and 2)
17	–––	Ground branch of harness 16	10 (Sheets 1 and 2)
18	–––	Ignition exciter branch of harness 16	10 (Sheets 1 and 2)
19	–––	Anti–icing air valve solenoid branch of harness 16	10 (Sheets 1 and 2)
20	–––	Ignition relay branch of harness 16	10 (Sheets 1 and 2)
21	–––	Compressor discharge pressure transducer branch of harness 16	10 (Sheets 1 and 2), 11, 12
22	–––	Compressor discharge temperature transducer branch of harness 16	10 (Sheets 1 and 2), 12

Legend to Figure 2 (contd)

Seq. No.	Part No.	Nomenclature	Zone Detail Fig. No.
23	–––	Gearbox accelerometer branch of harness 16	10 (Sheets 1 and 2), 17
24	23038786	Interconnecting wiring harness assembly (branched)	10 (Sheets 1 and 3)
25	–––	Compressor inlet temperature branch of harness 24	10 (Sheets 1 and 3)
26	–––	Thermocouple pickup branch of harness 24	10 (Sheets 1 and 2), 11, 18
27	–––	Torque pickup branch of harness 24	10 (Sheets 1 and 2), 17
28	–––	Interconnecting harness jumper branch of harness 16	10 (Sheets 1 and 2)
29	–––	Left harness jumper branch of harness 24	10 (Sheets 1 and 2)
30	–––	Fuel valve solenoid branch of harness 16	10 (Sheets 1 and 3)
31	–––	Drain valve solenoid branch of harness 16	10 (Sheets 1 and 3), 11, 15 (Sheet 1)
32	–––	PLA Coordinator potentiometer branch of harness 24	10 (Sheets 1 and 3), 11, 15 (Sheet 1)
33	–––	Fuel trim valve branch of harness 24	10 (Sheets 1 and 2), 15 (Sheet 1)
34	23009750	Compressor bleed air supply tube assembly	10 (Sheets 1 and 3), 11
35	6846454–063140 or 6844338–061140 or 6844749–061140 or 6846454–061140	Hose assembly (speed sensing valve to pressure filter)	10 (Sheets 1 and 3)
36	6886430E100C	Hose assembly (bottom 5th to 10th stage air bleed valves) (View in direction B)	15 (Sheet 1)
37	23033772	Left–hand flexible fuel manifold assembly	11, 13
41	23052046	Right–hand flexible fuel manifold assembly	13, 15 (Sheet 1)
42	6844704–043085 or 6847554–043085 or 6844337–041085 or 6844747–041085	Hose assembly (left 5th to left 10th stage air bleed valves)	10 (Sheets 1 and 3), 11
43	6844702–061171 or 6844813–061171 or 6844335–061171 or 6844744–061171 or 6844335–069171	Hose assembly (top 10th to left 10th stage air bleed valves)	11
46	23032692	Thermocouple wiring harness assembly	18
47	23032694	Turbine interstage thermocouple assembly	18

Legend to Figure 2 (contd)

Seq. No.	Part No.	Nomenclature	Zone Detail Fig. No.
68	6829299 or 23060837	Spark igniter lead assembly (No. 5 liner)	14, 19
71	23007934	Front rear turbine bearing tube assembly	19, 20
72	23032654	Rear turbine bearing pressure oil tube assembly	19, 20

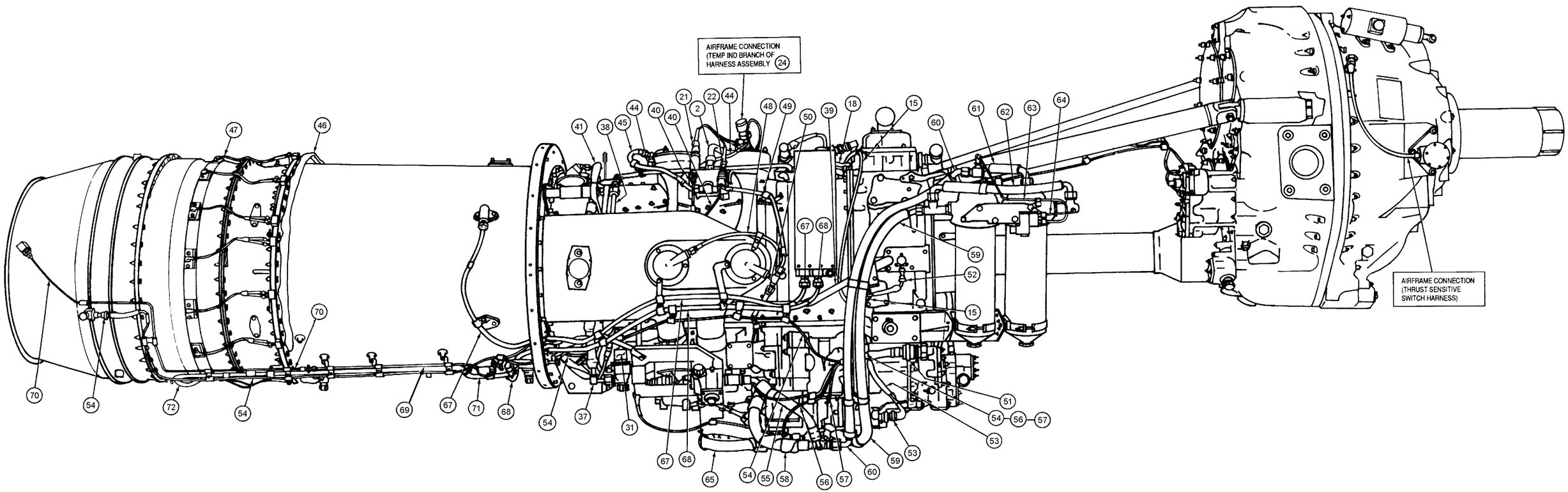

Figure 3. Engine Right Side View

Legend to Figure 3

Seq. No.	Part No.	Nomenclature	Zone Detail Fig. No.
2	6844335–081472 or 6844335–089472 or 6844744–081472 or AE3663661H472	Hose assembly (speed sensing valve to distribution tee)	6, 12
15	6886430E274C	Hose assembly (right–hand anti–icing air valve to solenoid valve)	10 (Sheets 1 and 2), 12
18	–––	Ignition exciter branch of harness 16 (figure 2)	10 (Sheets 1 and 2)
21	–––	Compressor discharge pressure transducer branch of harness 16 (figure 2)	10 (Sheets 1 and 2), 11, 12
22	–––	Compressor discharge temperature transducer branch of harness 16 (figure 2)	10 (Sheets 1 and 2), 12
31	–––	Drain valve solenoid branch of harness 16 (figure 2)	10 (Sheets 1 and 3), 11, 15 (Sheet 1)
37	23033772	Left–hand flexible fuel manifold assembly	11, 13
38	23007930	Pressure oil tee–to–spray shield tube assembly	12, 19
39	23008233	Anti–icing air tube assembly	12
40	23037389	Total temperature/pressure sensor assembly	12
41	23052046	Right–hand flexible fuel manifold assembly	13, 15 (Sheet 1)
44	6847553–043132 or 6844330–041132 or 6846460–041132	Hose assembly (top 5th to top 10th stage air bleed valves)	13
45	6886430G127B	Hose assembly (top 10th stage air bleed valve to distribution tee)	13
46	23032692	Thermocouple wiring harness assembly	18
47	23032694	Turbine interstage thermocouple assembly	18
48	6844703–043114 or 6844815–043114 or 6844336–041114 or 6844746–041114 or 6844815–041114	Hose assembly (right 5th to right 10th stage air bleed valves)	13
49	6886430G127B	Hose assembly (distribution tee to 10th stage air bleed valve)	13
50	6844703–063126 or 6844815–063126 or 6844336–061126 or 6844746–061126 or 6844815–061126	Hose assembly (right 5th to bottom 5th stage air bleed valves)	13, 15 (Sheet 1)

Legend to Figure 3 (contd)

Seq. No.	Part No.	Nomenclature	Zone Detail Fig. No.
51	23035489 or 23056918	Right–hand wiring harness assembly (branched)	14
52	–––	Compressor accelerometer branch of harness 51	14
53	–––	Fuel pump paralleling valve solenoid branch of harness 51	14
54	–––	Turbine accelerometer branch of harness 51	14, 19, 20
55	6879880G095E255	Hose assembly (flow limiting valve bypass port to high pressure filter bypass port)	14
56	–––	Low speed ground idle solenoid branch of harness 51	14, 15 (Sheet 1)
57	–––	Ground branch of harness 51	14, 15 (Sheet 1)
58	6879880J100A	Hose assembly (trim valve bypass port to high pressure bypass port	14, 15 (Sheet 2)
59	6877213	Hose assembly (boost pump outlet to No. 1 filter inlet)	14, 15 (Sheet 2), 16
60	6877214	Hose assembly (high pressure filter by-pass port to No. 1 filter outlet)	14, 15 (Sheet 2, 16
61	6877218	Hose assembly (No. 2 filter outlet to No. 1 filter outlet)	16
62	6877217	Hose assembly (No. 1 filter inlet to No. 2 filter inlet)	16
63	6827810	Fuel filter outlet to pressure switch tube assembly	16
64	6827811	Fuel filter inlet to pressure switch tube as-sembly	16
65	23052052	Hose assembly (high pressure fuel filter outlet port to trim valve inlet port)	15 (Sheet 2)
67	6829298 or 23060836	Spark igniter lead assembly (No. 2 liner)	14, 19
68	6829299 or 23060837	Spark igniter lead assembly (No. 5 liner)	14, 19
69	23035452	Forward PS7 tube assembly	19, 20
70	23032685	Aft PS7 tube assembly	19, 20
71	23007934	Front rear turbine bearing tube assembly	19, 20
72	23032654	Rear turbine bearing pressure oil tube as-sembly	19, 20

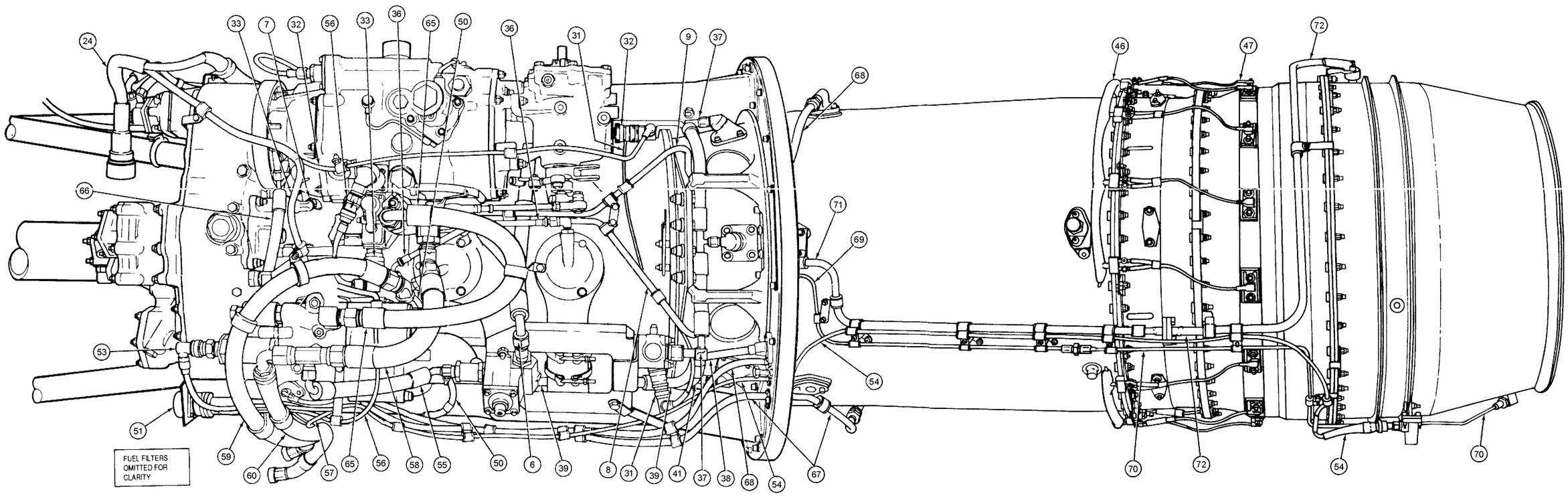

Figure 4. Engine Bottom View

Legend to Figure 4

Seq. No.	Part No.	Nomenclature	Zone Detail Fig. No.
6	6879880H167F267	Hose assembly (fuel control outlet to fuel flow limiting valve)	7, 8
7	6843446	External scavenge pump out oil tube assembly	8
8	23007944	Right–side diffuser to scavenge pump oil tube assembly	8
9	23007948	Left–side diffuser to scavenge pump oil tube assembly	8
24	23038786	Interconnecting wiring harness assembly	10 (Sheets 1 and 3)
31	–––	Drain valve solenoid branch of harness 16 (figure 2)	10 (Sheets 1 and 3), 11, 15 (Sheet 1)
32	–––	PLA coordinator potentiometer branch of harness 24	10 (Sheets 1 and 3), 11, 15 (Sheet 1)
33	–––	Fuel trim valve branch of harness 24	10 (Sheets 1 and 3), 15 (Sheet 1)
36	6886430E100C	Hose assembly (bottom 5th to 10th stage air bleed valves)	15 (Sheet 1)
37	23033772	Left–hand flexible fuel manifold assembly	11, 13
38	23007930	Pressure oil tee–to–spray shield tube assembly	12, 19
39	23008233	Anti–icing air tube assembly	12
41	23052046	Right–hand flexible fuel manifold assembly	13, 15 (Sheet 1)
46	23032692	Thermocouple wiring harness assembly	18
47	23032694	Turbine interstage thermocouple assembly	18
50	6844703–063126 or 6844815–063126 or 6844336–061126 or 6844746–061126 or 6844815–061126	Hose assembly (right 5th to bottom 5th stage air bleed valves)	13, 15 (Sheet 1)

Legend to Figure 4 (contd)

Seq. No.	Part No.	Nomenclature	Zone Detail Fig. No.
51	23035489	Right–hand wiring harness assembly (branched)	14
53	–––	Fuel pump paralleling valve solenoid branch of harness 51	14
54	–––	Turbine accelerometer branch of harness 51	14, 19, 20
55	6879880G095E255	Hose assembly (flow limiting valve bypass port to high pressure filter bypass port)	14
56	–––	Low speed ground idle solenoid branch of harness 51	14, 15 (Sheet 1)
57	–––	Ground branch of harness 51	14, 15 (Sheet 1)
58	6879880J100A	Hose assembly (trim valve bypass port to high pressure bypass port)	14, 15 (Sheet 2)
59	6877213	Hose assembly (boost pump outlet to No. 1 filter inlet)	14, 15 (Sheet 2), 16
60	6877214	Hose assembly (high pressure filter by-pass to No. 1 filter outlet)	14, 15 (Sheet 2), 16
65	23052052	Hose assembly (high pressure fuel filter outlet port to fuel trim valve inlet port)	15 (Sheet 2)
66	6879880H076C	Hose assembly (high pressure fuel filter outlet port to enrichment valve)	15 (Sheet 2)
67	6829298	Spark igniter lead assembly (No. 2 liner)	14, 19
68	6829299	Spark igniter lead assembly (No. 5 liner)	14, 19
69	23035452	Forward PS7 tube assembly	19, 20
70	23032685	Aft PS7 tube assembly	19, 20
71	23007934	Front rear turbine bearing tube assembly	19, 20
72	23032655	Rear turbine bearing pressure oil tube as-sembly	19, 20

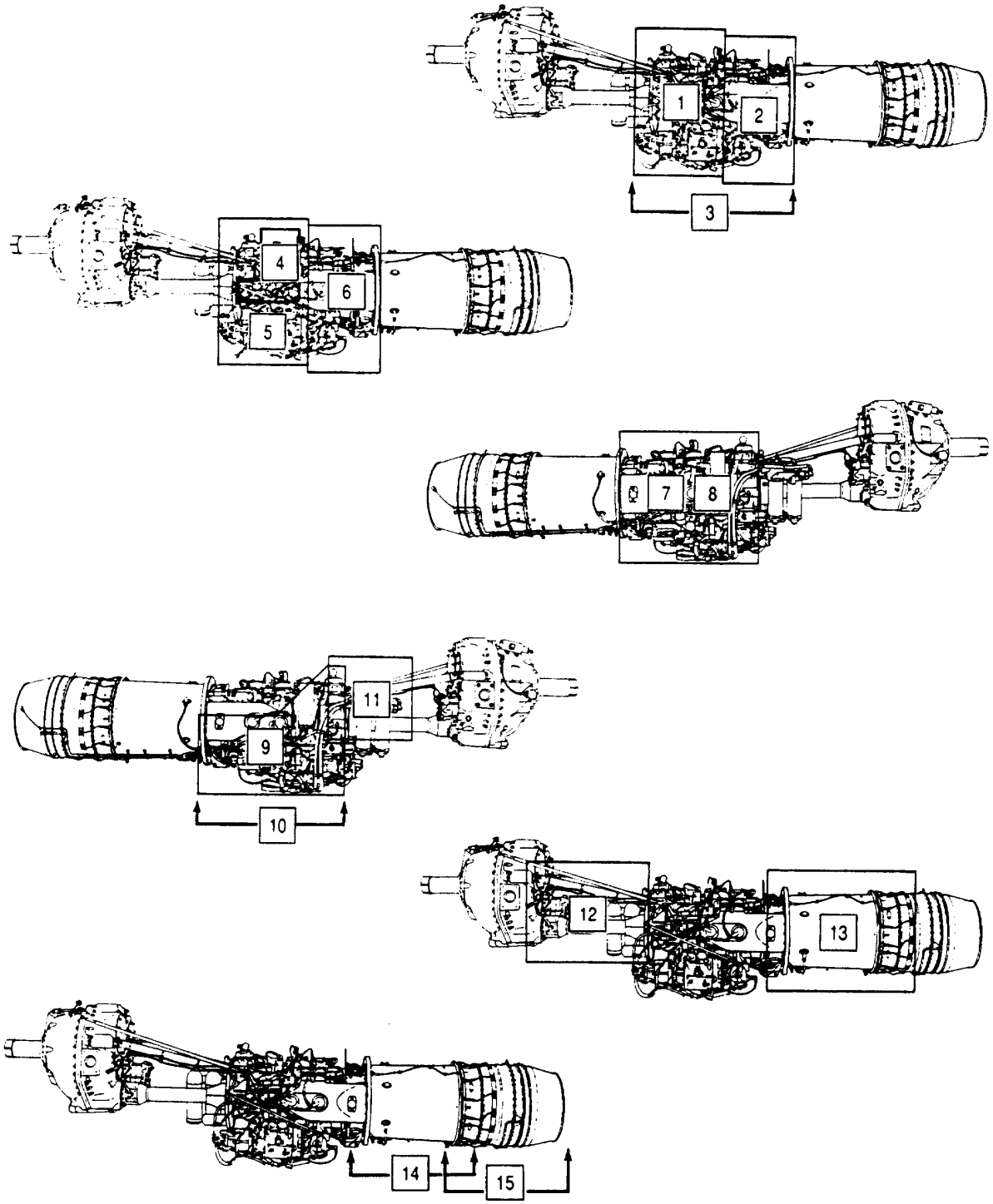

Figure 5. Engine Zones

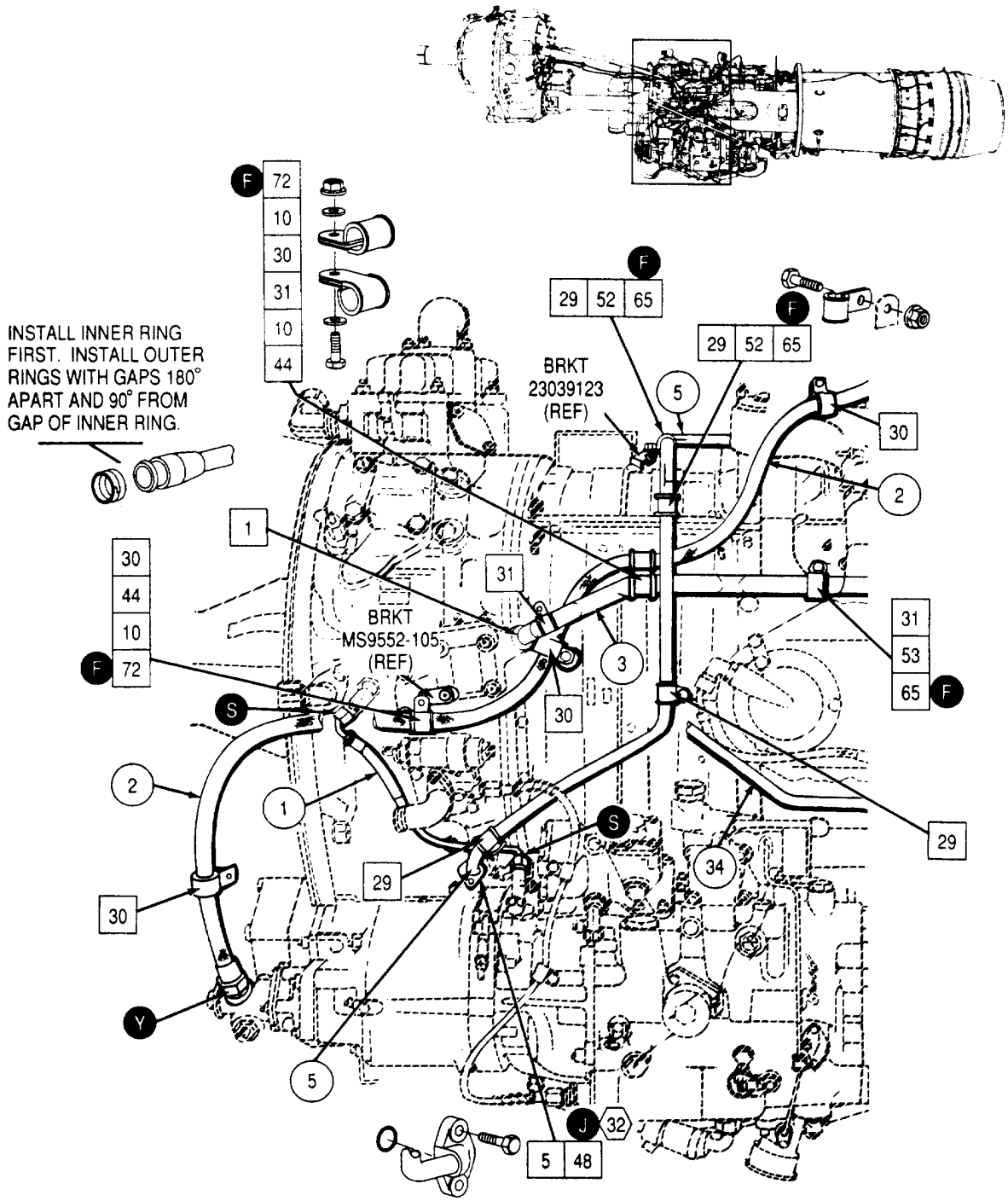

Figure 6. Zone 1 Detail View

Legend to Figure 6

Index Code	Part No.	Nomenclature	Specifications
1	23008234	Ring assembly, piston	
5	AS3085–113	Packing, preformed	
10	AN960–10L	Washer, flat	0.032 in. thick
29	6749387–06	Clamp, loop–type	
30	6749387–08	Clamp, loop–type	
31	6749387–09	Clamp, loop–type	
44	AN101009	Bolt, hex head	0.190–32 x 0.562 in. long
48	AN102908	Bolt, hex head, drilled	0.250–28 x 0.625 in. long
52	MS9489–05	Bolt, hex head	0.190–32 x 0.438 in. long
53	MS9489–06	Bolt, hex head	0.190–32 x 0.500 in. long
65	MS21043–3	Nut, self–locking	10–32
72	6782262–1032 or 6782886–1032 or 6782887–1032	Nut, self–locking	10–32
F	–––	Torque	37–42 lb–in
J	–––	Torque	70–85 lb–in
S	–––	Torque	80–120 lb–in
Y	–––	Torque	325–400 lb–in
32	MS20995C32	Lockwire	0.032 in. dia

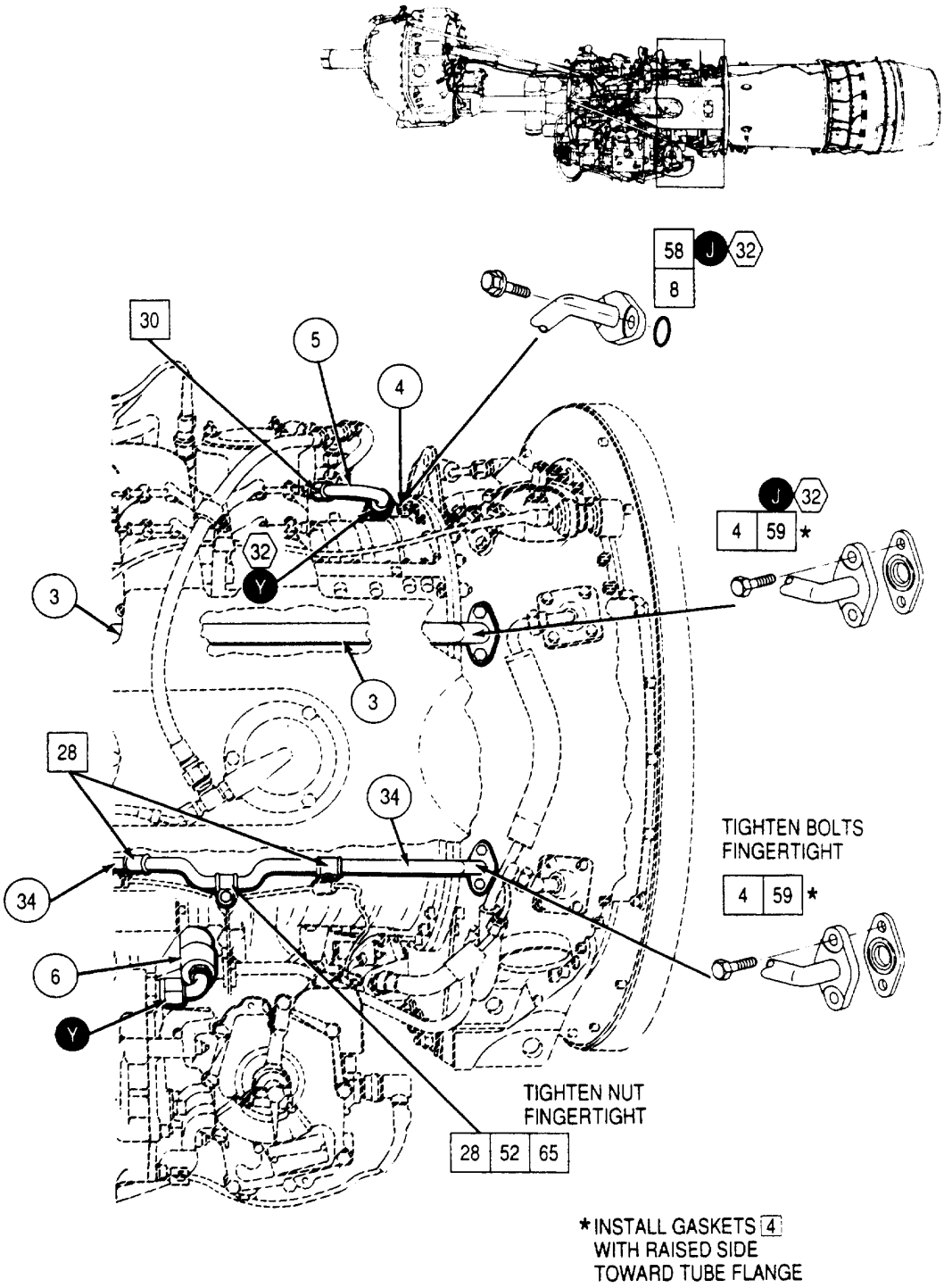

Figure 7. Zone 2 Detail View

Legend to Figure 7

Index Code	Part No.	Nomenclature	Specifications
4	6738108	Gasket, metallic O–ring	
8	6784419–4	Seal, metallic O–ring	0.688 in. OD
28	6749387–05	Clamp, loop–type	
30	6749387–08	Clamp, loop–type	
52	MS9489–05	Bolt, hex head	0.190–32 x 0.438 in. long
58	MS9575–06	Bolt, double hex head, drilled	0.250–28 x 0.500 in. long
59	6784633	Bolt, hex head, drilled	0.250–28 x 0.562 in. long
65	MS21043–3	Nut, self–locking	10–32
J	–––	Torque	70–85 lb–in
Y	–––	Torque	325–400 lb–in
32	MS20995C32	Lockwire	0.032 in. dia

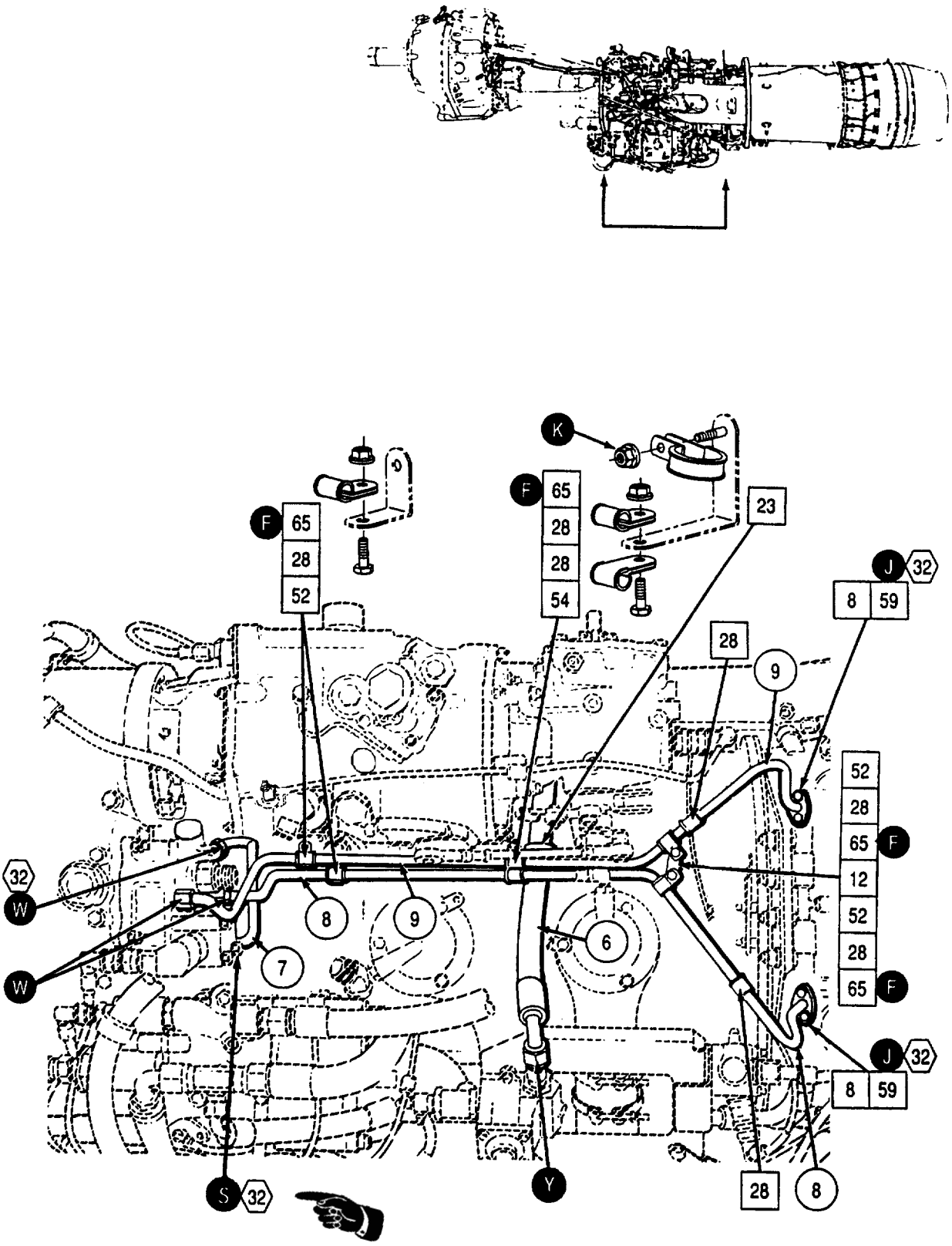

Figure 8. Zone 3 Detail View

Legend to Figure 8

Index Code	Part No.	Nomenclature	Specifications
8	6784419–4	Seal, metallic O–ring	0.688 in. OD
12	MS9552–010	Plate	1.000 in. long
23	MS9352–12	Clamp, loop–type	
28	6749387–05	Clamp, loop–type	
52	MS9489–05	Bolt, hex head	0.190–32 x 0.438 in. long
54	MS9489–07	Bolt, hex head	0.190–32 x 0.562 in. long
59	6784633	Bolt, hex head, drilled	0.250–28 x 0.562 in. long
65	MS21043–3	Nut, self–locking	10–32
F	–––	Torque	37–42 lb–in
J	–––	Torque	70–85 lb–in
K	–––	Torque	74–89 lb–in
S	–––	Torque	80–120 lb–in
V	–––	Torque	150–200 lb–in
W	–––	Torque	200–250 lb–in
Y	–––	Torque	325–400 lb–in
32	MS20995C32	Lockwire	0.032 in. dia

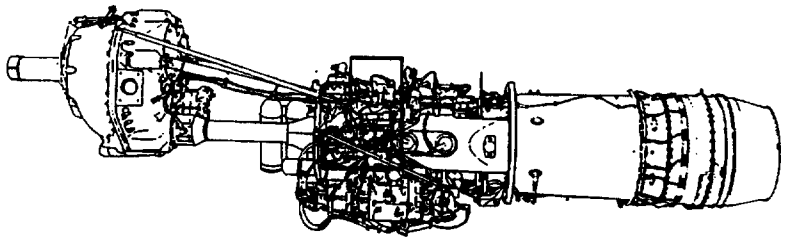

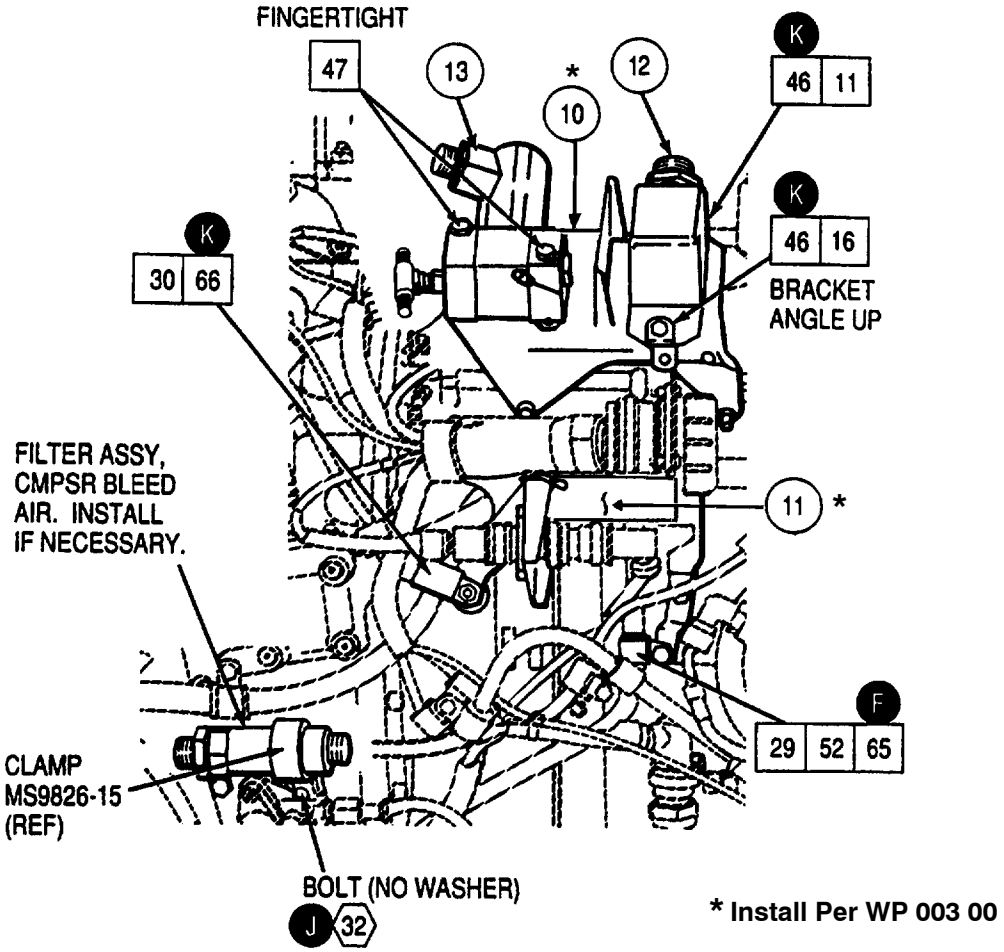

Figure 9. Zone 4 Detail View

Legend to Figure 9

Index Code	Part No.	Nomenclature	Specifications
11	AN960–416L	Washer, flat	0.032 in. thick
16	6737017	Bracket, Z–type	
29	6749387–06	Clamp, loop–type	
30	6749387–08	Clamp, loop–type	
46	AN101106	Bolt, hex head	0.250–28 x 0.500 in. long
47	AN101129	Bolt, hex head	0.250–28 x 2.125 in. long
52	MS9489–05	Bolt, hex head	0.190–32 x 0.438 in. long
65	MS21043–3	Nut, self–locking	10–32
66	MS21043–4	Nut, self–locking	1/4–28
F	–––	Torque	37–42 lb–in
J	–––	Torque	70–85 lb–in
K	–––	Torque	74–89 lb–in
32	MS20995C32	Lockwire	0.032 in. dia

NOTE
SHEET 1 PROVIDES SEQUENCE NUMBERS ONLY FOR ZONE SHOWN. REFER TO SHEET 2 (ZONE UPPER HALF) AND SHEET 3 (ZONE LOWER HALF) FOR INSTALLATION DETAILS.

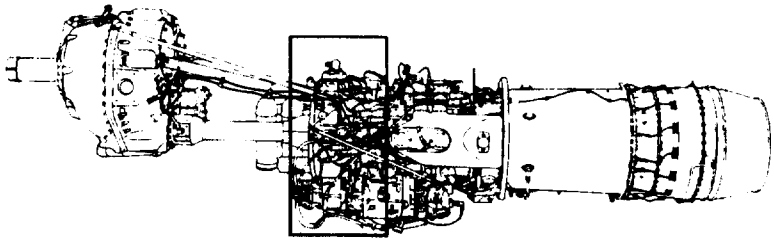

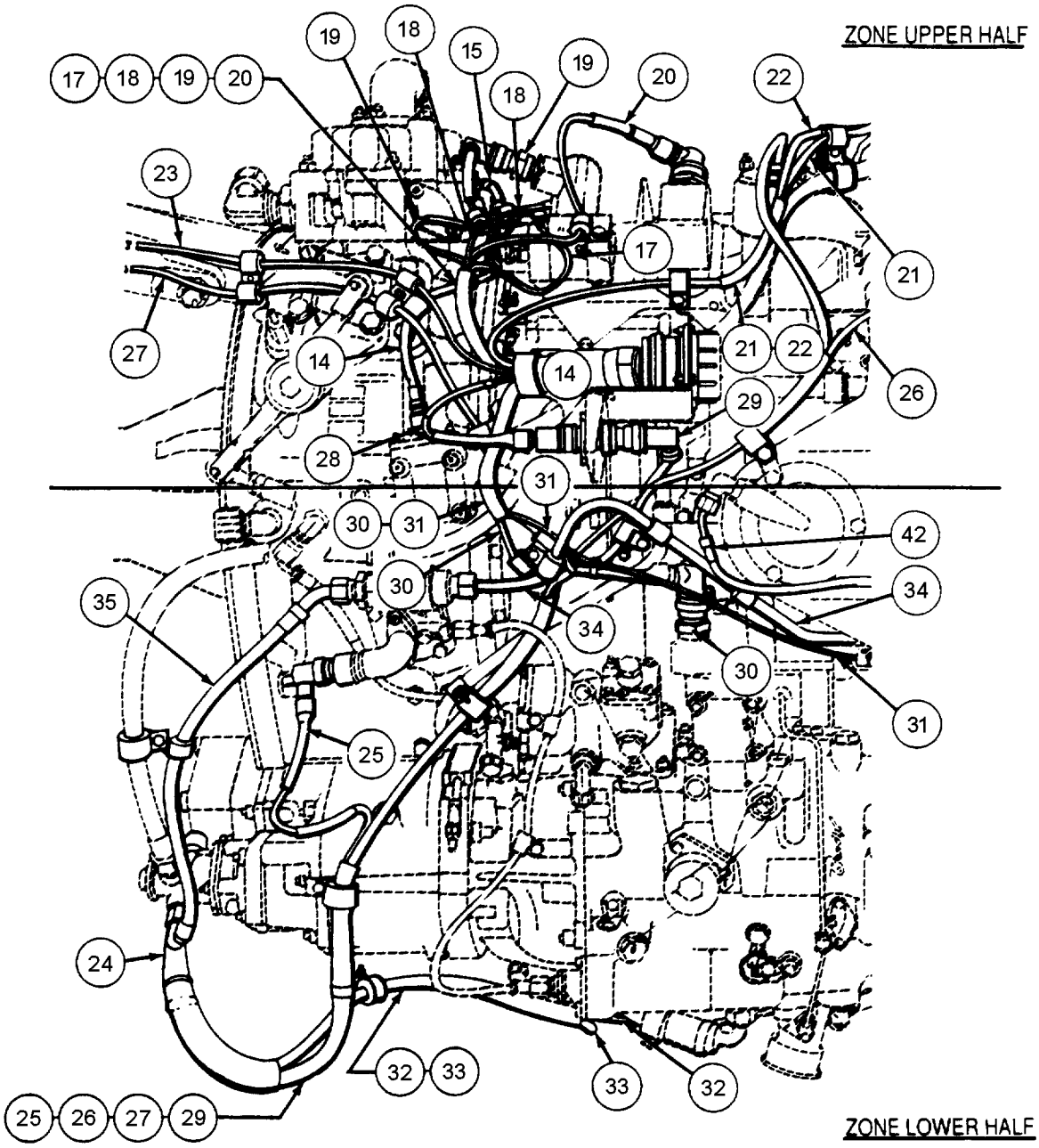

Figure 10. Zone 5 Detail View (Sheet 1 of 3)

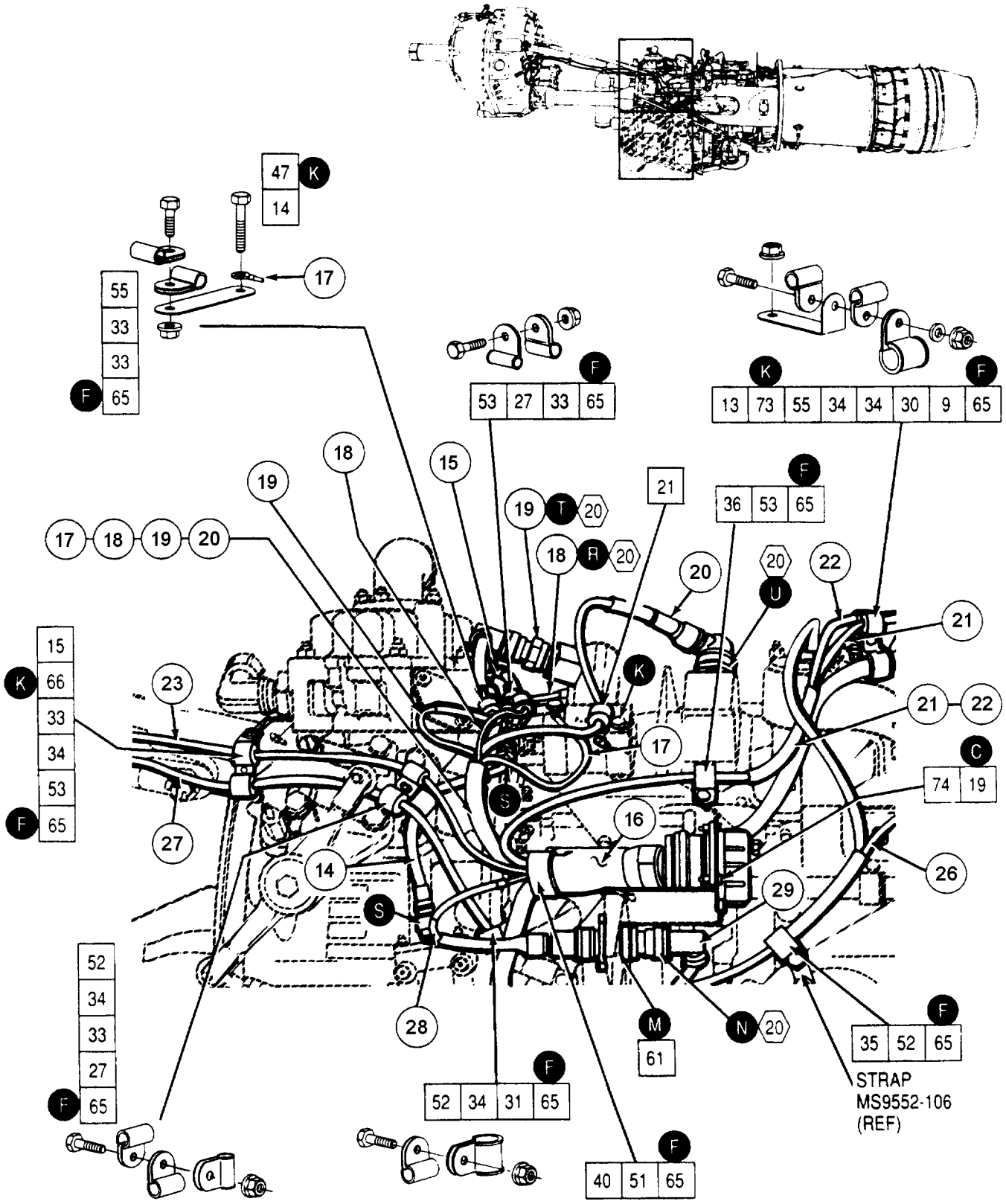

Figure 10. Zone 5 Detail View (Sheet 2)

Legend to Figure 10 (Sheet 2)

Index Code	Part No.	Nomenclature	Specifications
9	AN960–10	Washer, flat	0.063 in. thick
13	MS9602–250	Bracket, 90° angle	
14	6713762	Bracket, straight	1 3/8 in. long
15	6735906	Bracket, straight	1 1/4 in. long
19	MS9488–06	Screw, hex head	0.164–36 x 0.500 in. long
21	MS9352–03	Clamp, loop–type	
27	6749387–04	Clamp, loop–type	
30	6749387–08	Clamp, loop–type	
31	6749387–09	Clamp, loop–type	
33	6739844–5	Clamp, loop–type	
34	6739844–6	Clamp, loop–type	
35	6739844–7	Clamp, loop–type	
36	6739844–8	Clamp, loop–type	
40	6739844–17	Clamp, loop–type	
47	AN101129	Bolt, hex head	0.250–28 x 2.125 in. long
51	MS9488–06	Bolt, hex head	0.164–36 x 0.500 in. long
52	MS9489–05	Bolt, hex head	0.190–32 x 0.438 in. long
53	MS9489–06	Bolt, hex head	0.190–32 x 0.500 in. long
55	MS9489–08	Bolt, hex head	0.190–32 x 0.625 in. long
61	–––	Nut, bulkhead (detail of harness)	0.190–32 x 0.625 in. long
65	MS21043–3	Nut, self–locking	10–32
66	MS21043–4	Nut, self–locking	1/4–28
73	6782262–428 or 6782886–428 or 6782887–428	Nut, self–locking	1/4–28
74	6828832–836	Nut, self–locking	8–36
C	–––	Torque	14–16 lb–in
F	–––	Torque	37–42 lb–in
K	–––	Torque	74–89 lb–in
M	–––	Torque	60–70 lb–in
N	–––	Torque	Tighten fingertight until seated. Plus 20° max angle of turn.
R	–––	Torque	70–90 lb–in
S	–––	Torque	80–120 lb–in
T	–––	Torque	100–120 lb–in
U	–––	Torque	140–160 lb–in
20	MS20995C20	Lockwire	0.020 in. dia

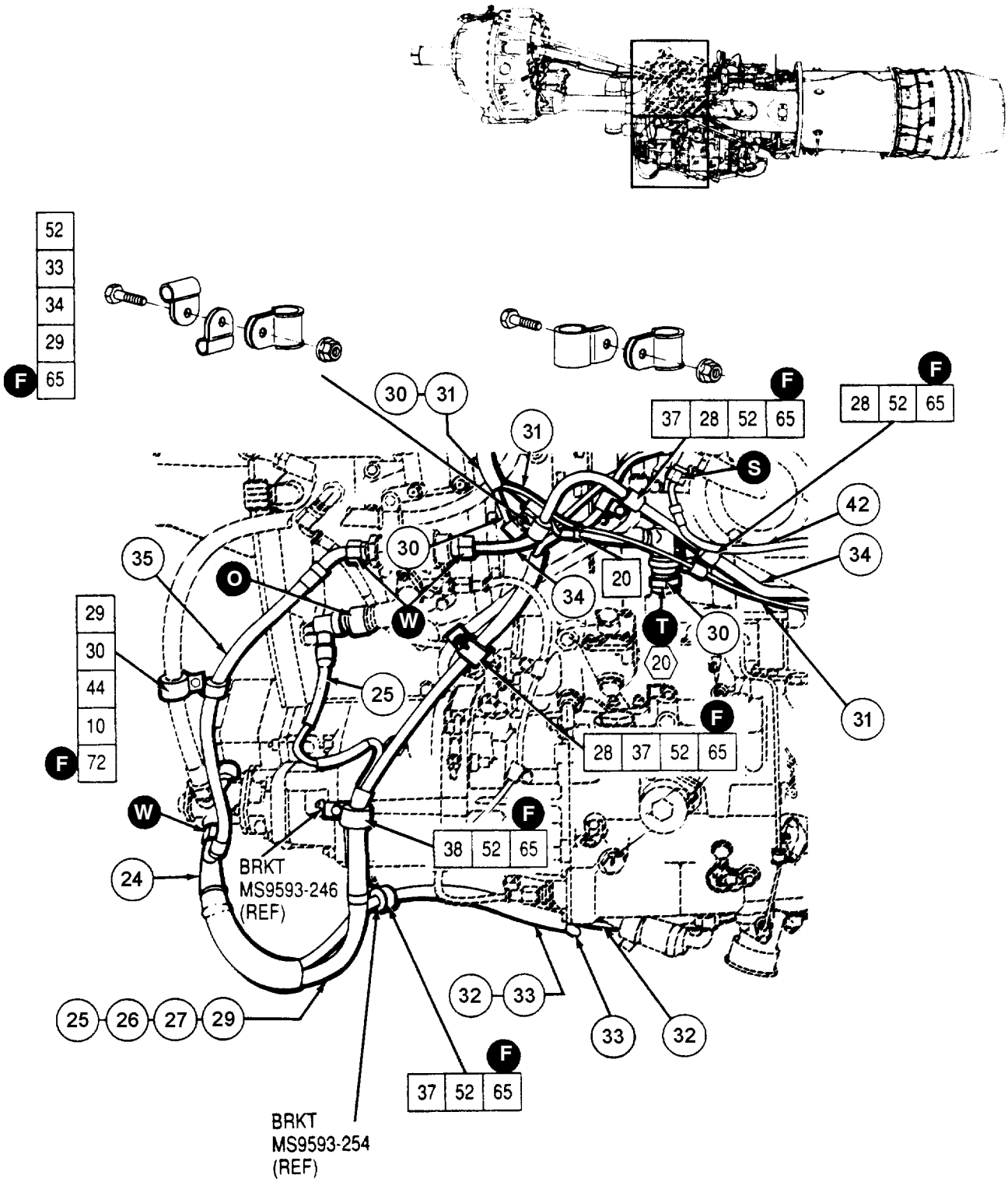

Figure 10. Zone 5 Detail View (Sheet 3)

Legend to Figure 10 (Sheet 3)

Index Code	Part No.	Nomenclature	Specifications
10	AN960–10L	Washer, flat	0.032 in. thick
20	MS3367–1–9	Strap, plastic	Use MS90387–1 installation tool
28	6749387–05	Clamp, loop	
29	6749387–06	Clamp, loop	
30	6749387–08	Clamp, loop	
33	6739844–5	Clamp, loop	
34	6739844–6	Clamp, loop	
37	6739844–9	Clamp, loop	
44	AN101009	Bolt, hex head	0.190–32 x 0.562 in. long
52	MS9489–05	Bolt, hex head	0.190–32 x 0.438 in. long
65	MS21043–3	Nut, self–locking	10–32
72	6782262–1032 or 6782886–1032 or 6782887–1032	Nut, self–locking	10–32
F	–––	Torque	37–42 lb–in
O	–––	Torque	Quick–disconnect. Hand tight until seated.
S	–––	Torque	80–120 lb–in
T	–––	Torque	100–120 lb–in
W	–––	Torque	200–250 lb–in
20	MS20995C20	Lockwire	0.020 in. dia

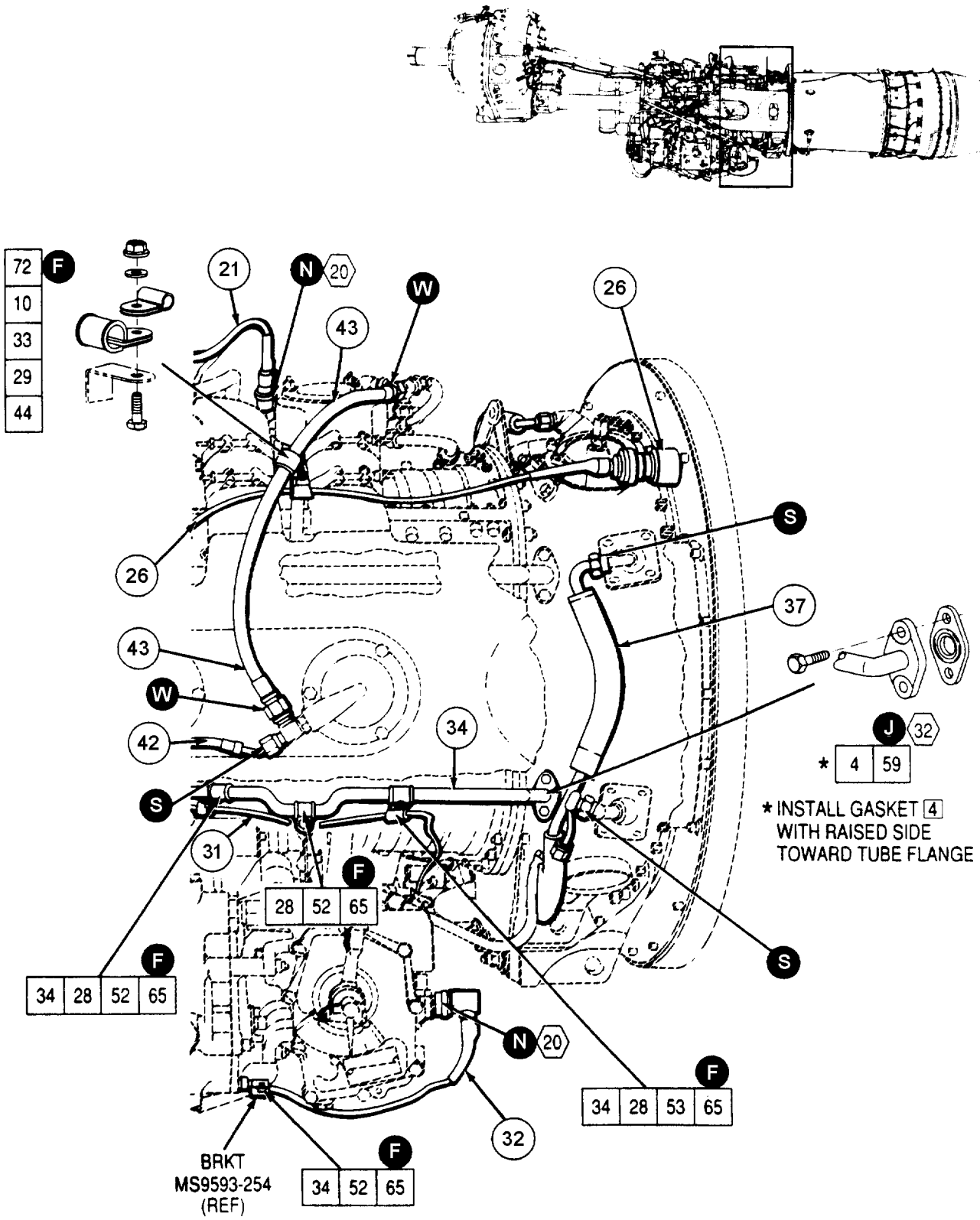

Figure 11. Zone 6 Detail View

Legend to Figure 11

Index Code	Part No.	Nomenclature	Specifications
4	6738108	Gasket, metallic O–ring	
10	AN960–10L	Washer, flat	0.032 in. thick
28	6749387–05	Clamp, loop–type	
29	6749387–06	Clamp, loop–type	
33	6739844–5	Clamp, loop–type	
34	6739844–6	Clamp, loop–type	
44	AN101009	Bolt, hex head	0.190–32 x 0.562 in. long
52	MS9489–05	Bolt, hex head	0.190–32 x 0.438 in. long
53	MS9489–06	Bolt, hex head	0.190–32 x 0.500 in. long
59	6784633	Bolt, hex head, drilled	0.250–28 x 0.562 in. long
65	MS21043–3	Nut, self–locking	10–32
72	6782262–1032 or 6782886–1032 or 6782887–1032	Nut, self–locking	10–32
F	–––	Torque	37–42 lb–in
J	–––	Torque	70–85 lb–in
N	–––	Torque	Tighten fingertight until seated plus 20° max angle of turn.
S	–––	Torque	80–120 lb–in
W	–––	Torque	200–250 lb–in
20	MS20995C20	Lockwire	0.020 in. dia
32	MS20995C32	Lockwire	0.032 in. dia

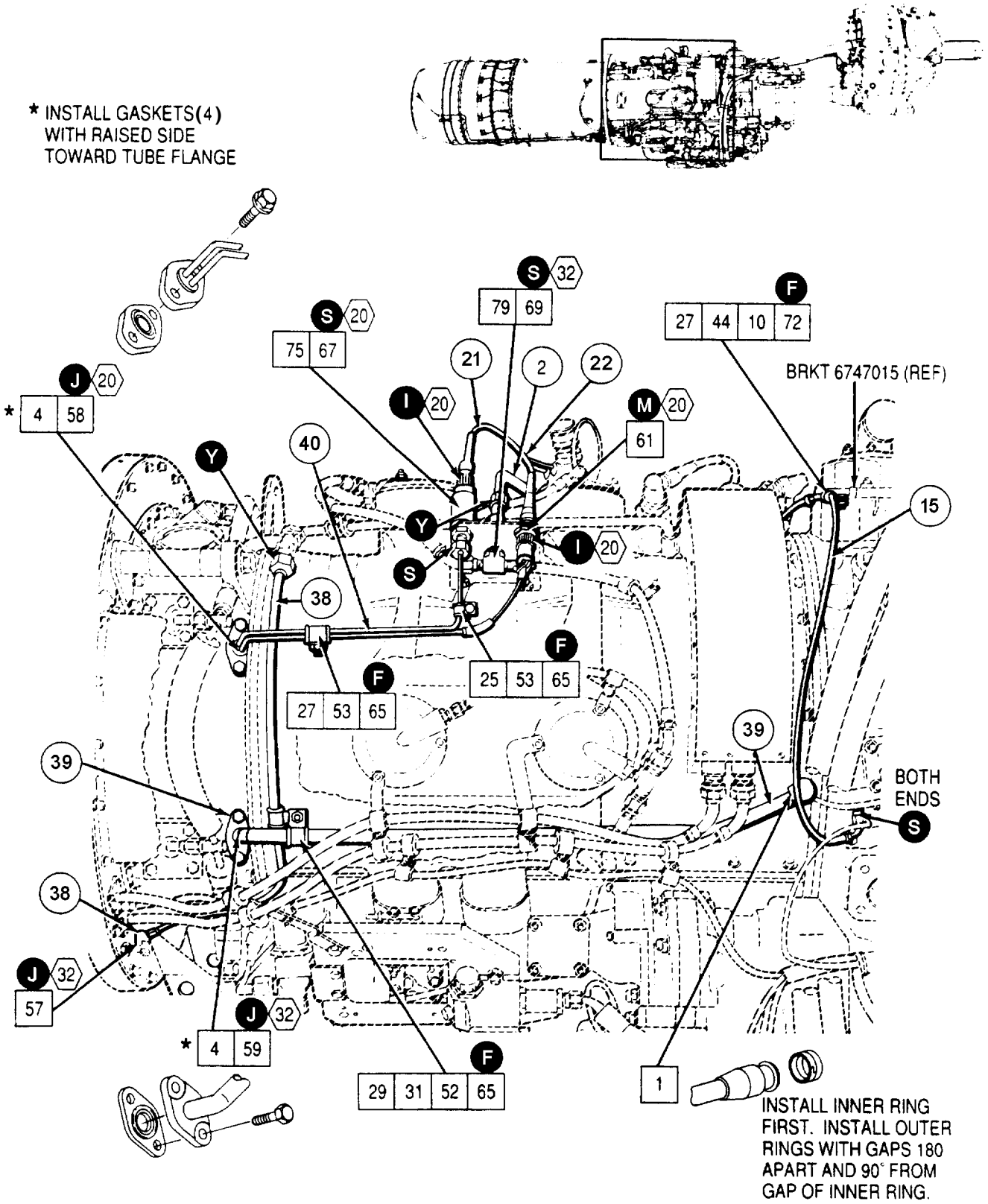

Figure 12. Zone 7 Detail View

Legend to Figure 12

Index Code	Part No.	Nomenclature	Specifications
1	23008234	Ring assembly, piston	
4	6738108	Gasket, metallic O–ring	
10	AN960–10L	Washer, flat	0.032 in. thick
25	6749387–02	Clamp, loop–type	
27	6749387–04	Clamp, loop–type	
29	6749387–06	Clamp, loop–type	
31	6749387–09	Clamp, loop–type	
44	AN101009	Bolt, hex head	0.190–32 x 0.562 in. long
52	MS9489–05	Bolt, hex head	0.190–32 x 0.438 in. long
53	MS9489–06	Bolt, hex head	0.190–32 x 0.500 in. long
57	MS9566–06	Bolt, double hex head, drilled	0.250–28 x 0.500 in. long
58	MS9575–06	Bolt, double hex head, drilled	0.250–28 x 0.500 in. long
59	6784633	Bolt, hex head, drilled	0.250–28 x 0.562 in. long
61	–––	Nut, bulkhead (detail of harness)	
65	MS21043–3	Nut, self–locking	10–32
67	MS9201–04	Nut, plain, drilled	0.4375–20
69	6709944	Nut, special, drilled	3/4–16
72	6782262–1032 or 6782886–1032 or 6782887–1032	Nut, self–locking	10–32
75	23032225 or 23065051	Transducer, absolute pressure	
79	6814159	Fitting, tee	
F	–––	Torque	37–42 lb–in
J	–––	Torque	70–85 lb–in
M	–––	Torque	60–70 lb–in
I	–––	Torque	Quick–disconnect. Tighten fingertight until seated and pin is visible through hole.
S	–––	Torque	80–120 lb–in
Y	–––	Torque	325–400 lb–in
20	MS20995C20	Lockwire	0.020 in. dia
32	MS20995C32	Lockwire	0.032 in. dia

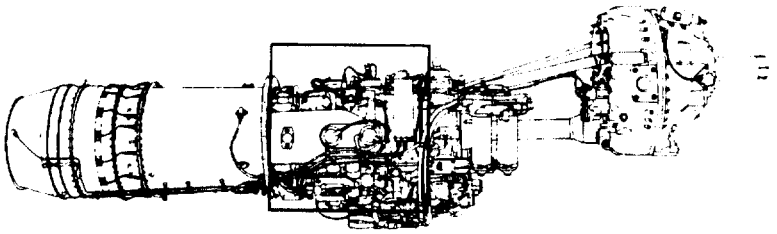

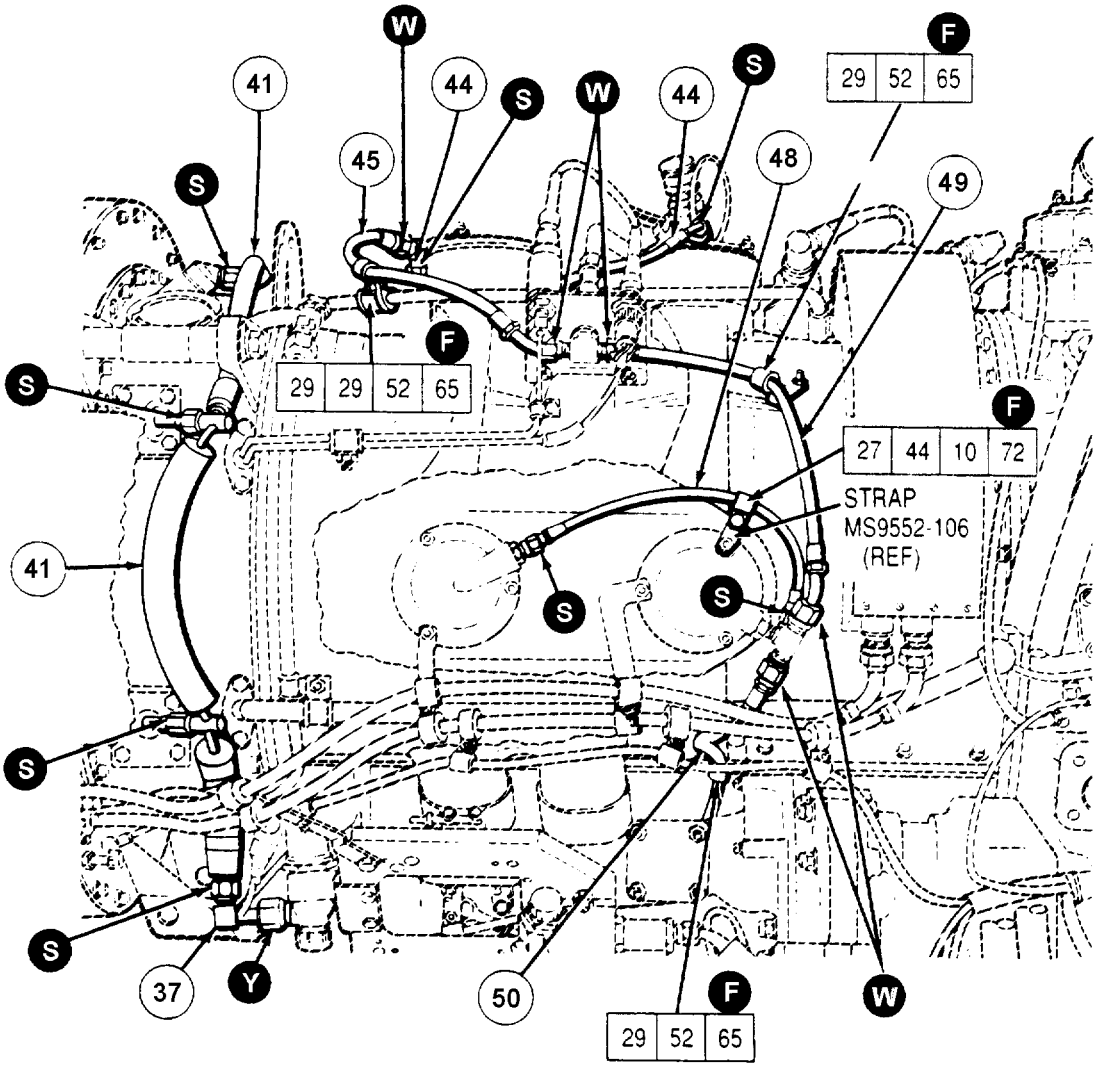

Figure 13. Zone 8 Detail View

Legend to Figure 13

Index Code	Part No.	Nomenclature	Specifications
10	AN960–10L	Washer, flat	0.032 in. thick
27	6749387–04	Clamp, loop–type	
29	6749387–06	Clamp, loop–type	
44	AN101009	Bolt, hex head	0.190–32 x 0.562 in. long
52	MS9489–05	Bolt, hex head	0.190–32 x 0.438 in. long
65	MS21043–3	Nut, self–locking	10–32
72	6782262–1032 or 6782886–1032 or 6782887–1032	Nut, self–locking	10–32
F	–––	Torque	37–42 lb–in
S	–––	Torque	80–120 lb–in
W	–––	Torque	200–250 lb–in
Y	–––	Torque	325–400 lb–in

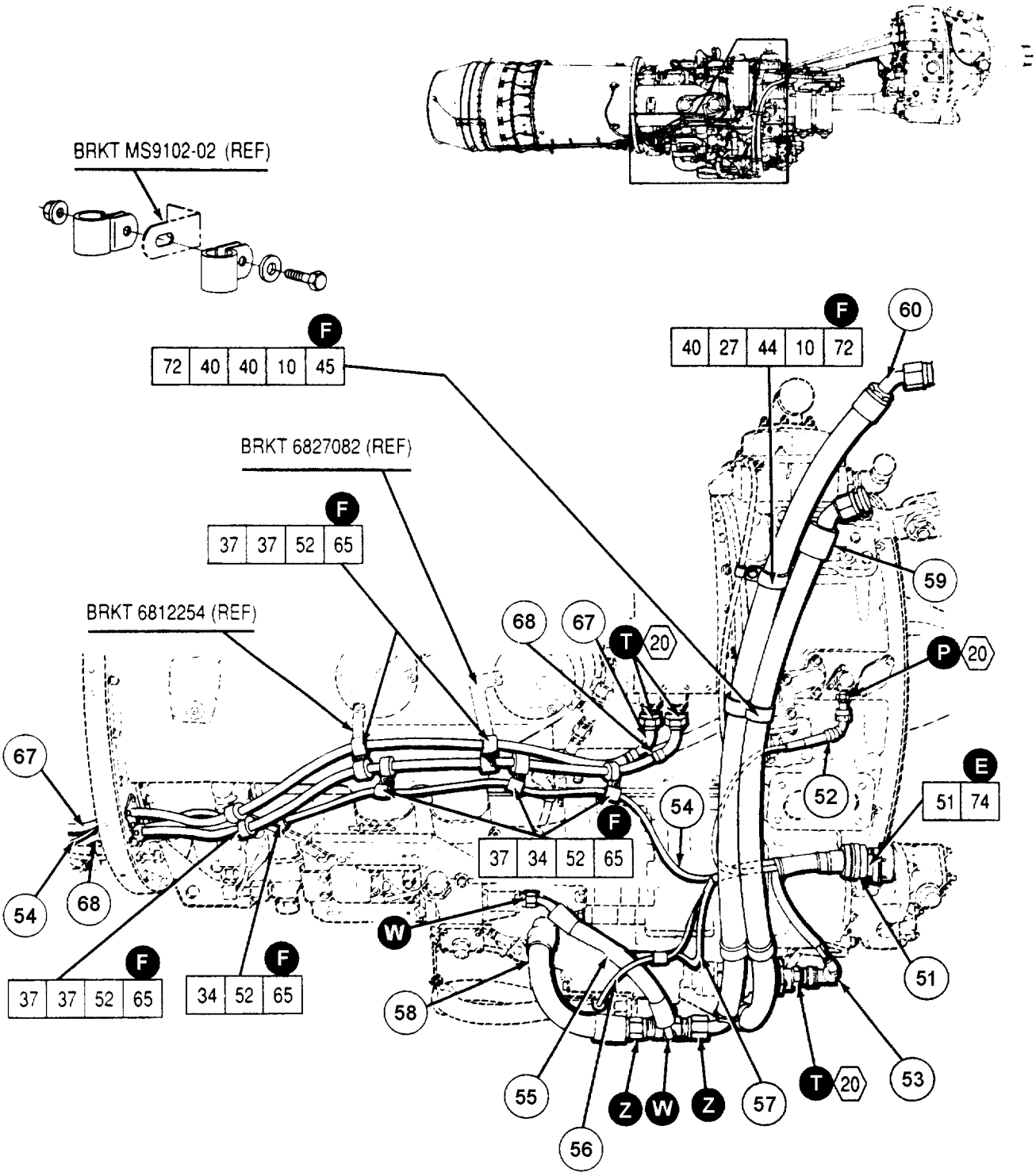

Figure 14. Zone 9 Detail View

Legend to Figure 14

Index Code	Part No.	Nomenclature	Specifications
10	AN960–10L	Washer, flat	0.032 in. thick
27	6749387–04	Clamp, loop–type	
34	6739844–6	Clamp, loop–type	
37	6739844–9	Clamp, loop–type	
40	6739844–17	Clamp, loop–type	
44	AN101009	Bolt, hex head	0.190–32 x 0.562 in. long
45	AN101010	Bolt, hex head	0.190–32 x 0.625 in. long
51	MS9488–06	Screw, hex head	0.164–36 x 0.500 in. long
52	MS9489–05	Bolt, hex head	0.190–32 x 0.438 in. long
65	MS21043–3	Nut, self–locking	10–32
72	6782262–1032 or 6782886–1032 or 6782887–1032	Nut, self–locking	10–32
74	6828832–836	Nut, self–locking	8–36
E	–––	Torque	19–22 lb–in
F	–––	Torque	37–42 lb–in
P	–––	Torque	62–97 lb–in
T	–––	Torque	100–120 lb–in
W	–––	Torque	200–250 lb–in
Z	–––	Torque	475–575 lb–in
20	MS20995C20	Lockwire	0.020 in. dia

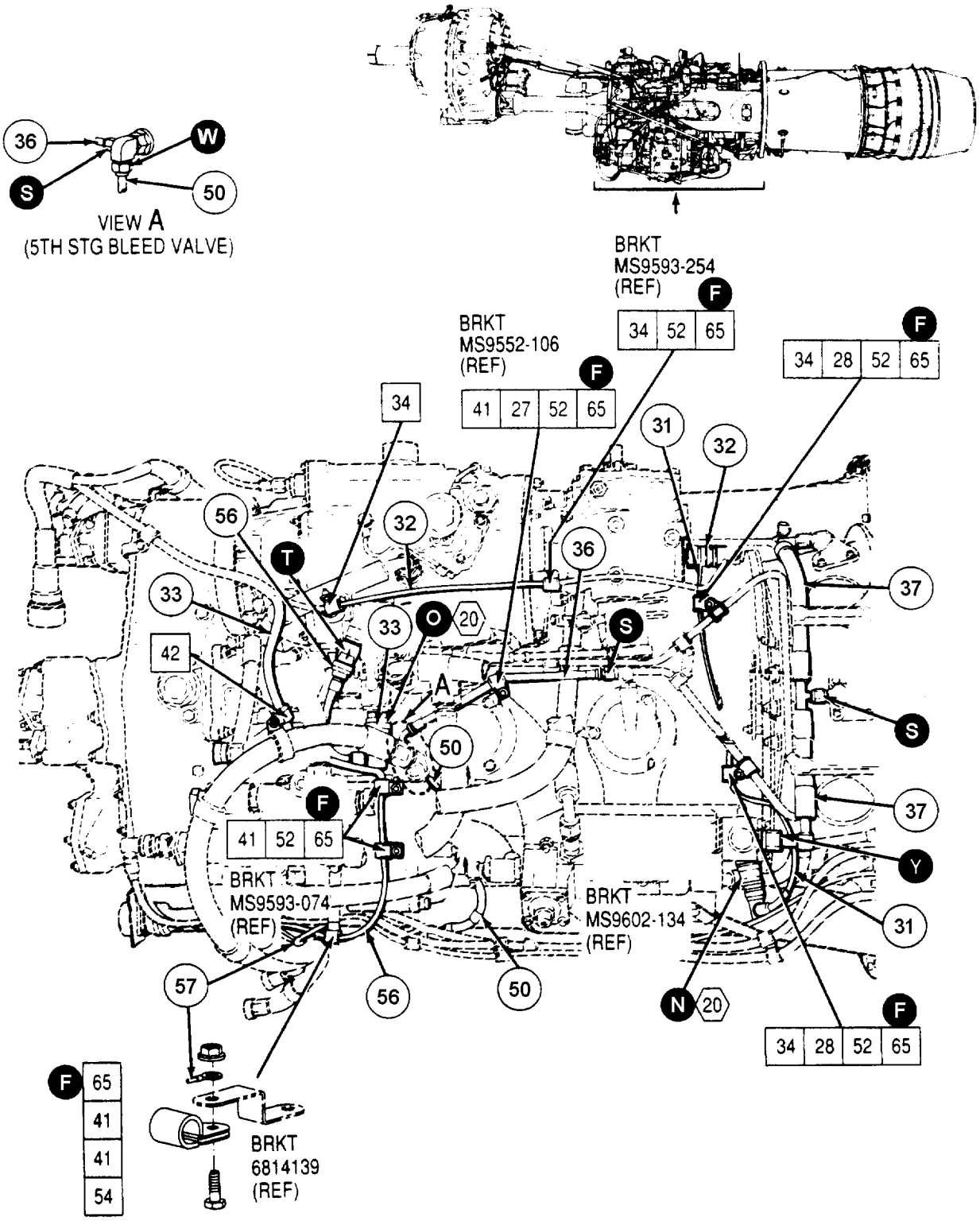

Figure 15. Zone 10 Detail View (Sheet 1 of 2)

Legend to Figure 15 (Sheet 1)

Index Code	Part No.	Nomenclature	Specifications
27	6749387–04	Clamp, loop–type	
28	6749387–05	Clamp, loop–type	
34	6739844–6	Clamp, loop–type	
41	6739844–5 or 6739844–6	Clamp, loop–type	Select best fit
42	6739844–8 or 6739844–9 or 6739844–10	Clamp, loop–type	Select best fit
52	MS9489–05	Bolt, hex head	0.190–32 x 0.438 in. long
54	MS9489–07	Bolt, hex head	0.190–32 x 0.562 in. long
65	MS21043–3	Nut, self–locking	10–32
F	–––	Torque	37–42 lb–in
N	–––	Torque	Tighten fingertight until seated. Plus 20° max angle of turn
O	–––	Torque	Quick–disconnect. Hand-tight until seated.
S	–––	Torque	80–120 lb–in
T	–––	Torque	100–120 lb–in
W	–––	Torque	200–250 lb–in
Y	–––	Torque	325–400 lb–in
20	MS20995C20	Lockwire	0.020 in. dia

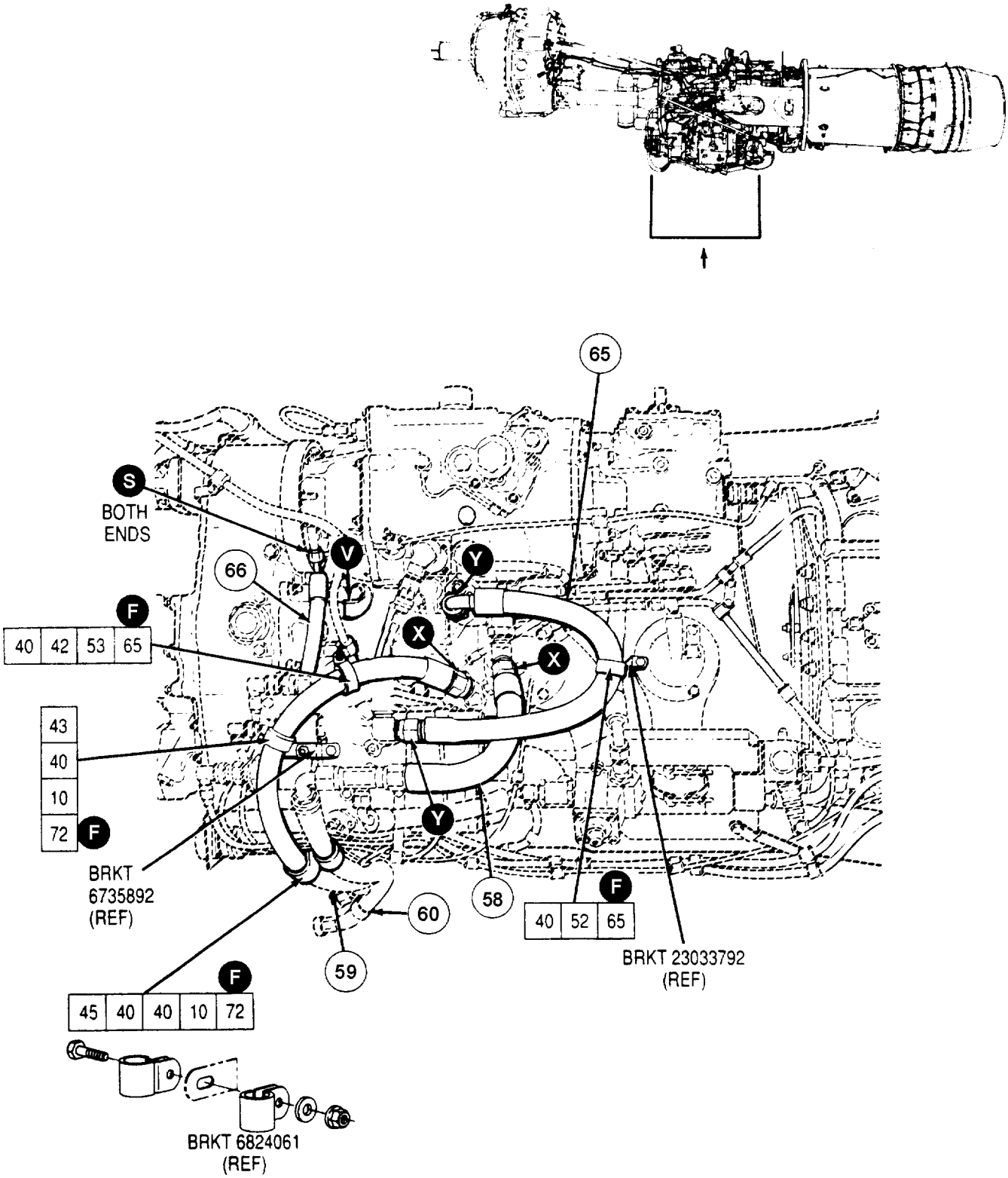

Figure 15. Zone 10 Detail View (Sheet 2)

Legend to Figure 15 (Sheet 2)

Index Code	Part No.	Nomenclature	Specifications
10	AN960–10L	Washer, flat	0.032 in. thick
40	6739844–7	Clamp, loop–type	
42	6739844–8 or 6739844–9 or 6739844–10	Clamp, loop–type	Select best fit
43	AN101008	Bolt, hex head	0.190–32 x 0.500 in. long
45	AN101010	Bolt, hex head	0.190–32 x 0.625 in. long
52	MS9489–05	Bolt, hex head	0.190–32 x 0.438 in. long
53	MS9489–06	Bolt, hex head	0.190–32 x 0.500 in. long
65	MS21043–3	Nut, self–locking	10–32
72	6782262–1032 or 6782886–1032 or 6782887–1032	Nut, self–locking	10–32
F	–––	Torque	37–42 lb–in
S	–––	Torque	80–120 lb–in
V	–––	Torque	150–200 lb–in
X	–––	Torque	200–350 lb–in
Y	–––	Torque	475–575 lb–in

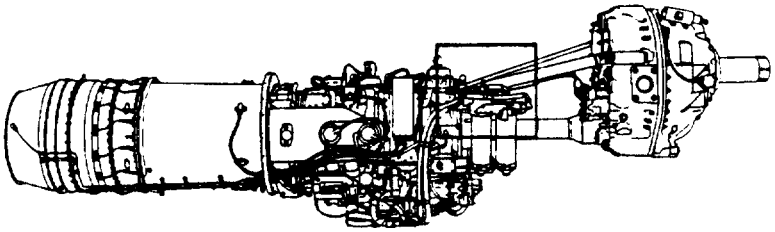

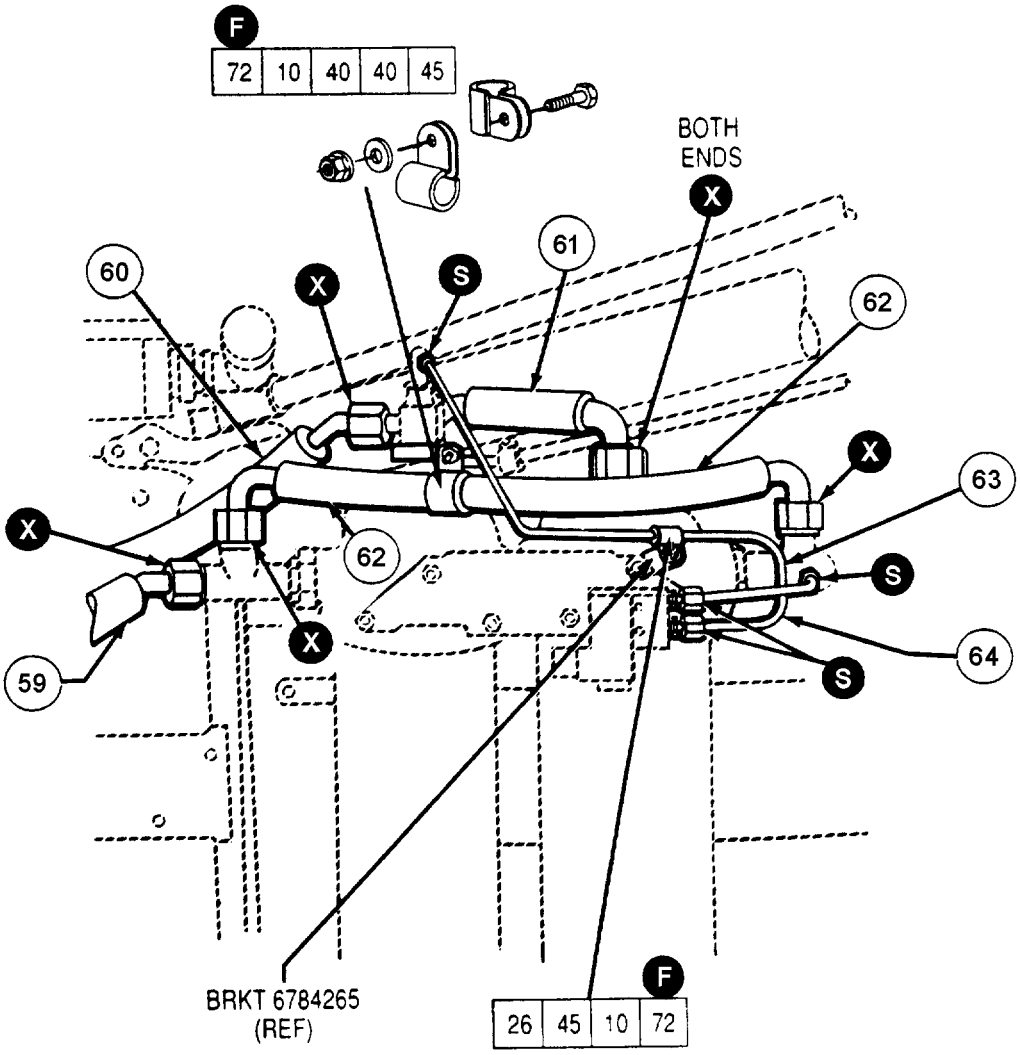

Figure 16. Zone 11 Detail View

Legend to Figure 16

Index Code	Part No.	Nomenclature	Specifications
10	AN960–10L	Washer, flat	0.032 in. thick
26	6749387–03	Clamp, loop–type	
40	6739844–17	Clamp, loop–type	
45	AN101010	Bolt, hex head	0.190–32 x 0.625 in. long
72	6782262–1032 or 6782886–1032 or 6782887–1032	Nut, self–locking	10–32
F	–––	Torque	37–42 lb–in
S	–––	Torque	80–120 lb–in
X	–––	Torque	200–350 lb–in

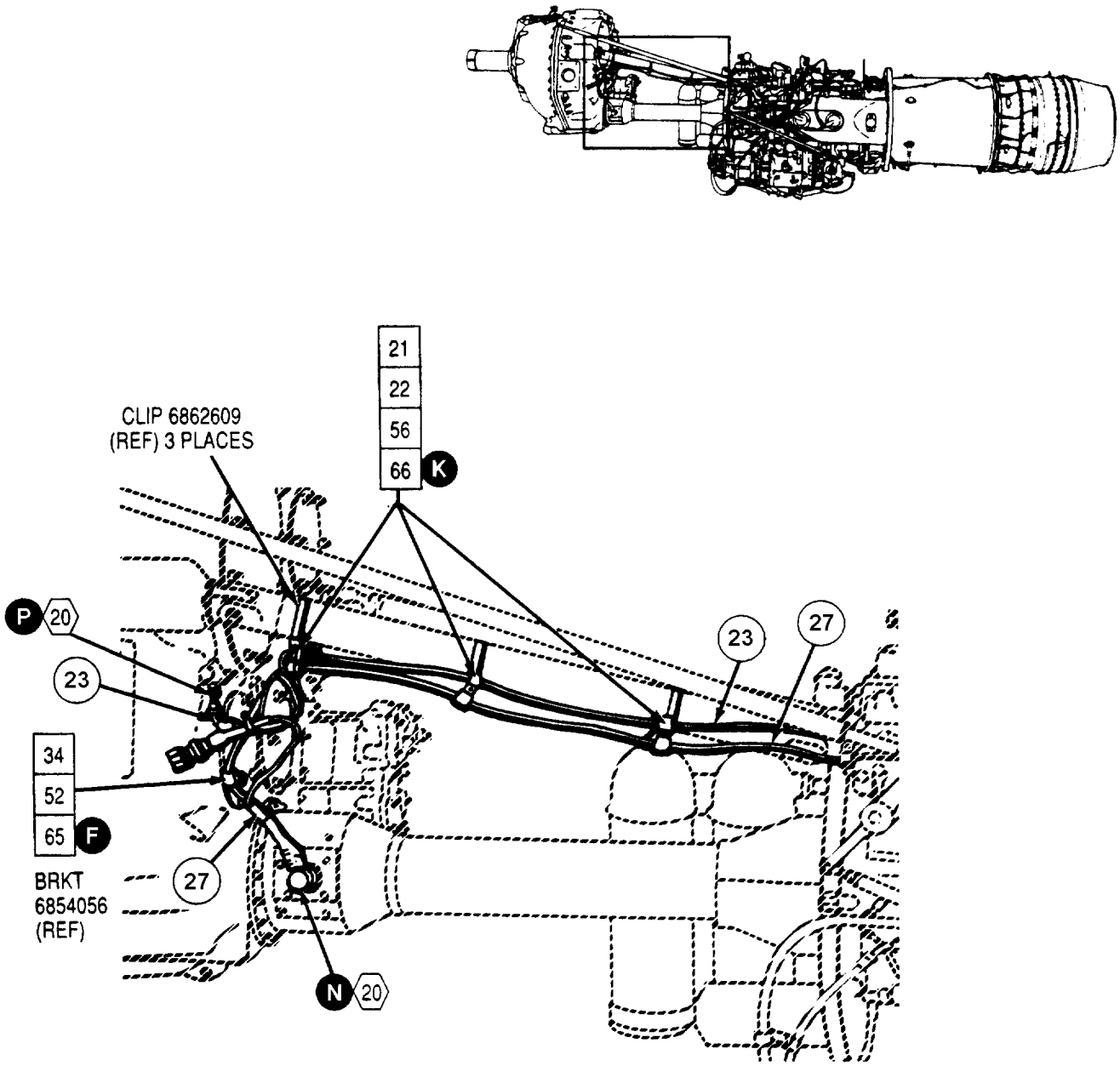

Figure 17. Zone 12 Detail View

Legend to Figure 17

Index Code	Part No.	Nomenclature	Specifications
21	MS9352–03	Clamp, loop–type	
22	MS9352–04	Clamp, loop–type	
34	6739844–6	Clamp, loop–type	
52	MS9489–05	Bolt, hex head	0.190–32 x 0.438 in. long
56	MS9557–10	Bolt, double hex head	0.250–28 x 0.750 in. long
65	MS21043–3	Nut, self–locking	10–32
66	MS21043–4	Nut, self–locking	1/4–28
F	–––	Torque	37–42 lb–in
K	–––	Torque	74–89 lb–in
N	–––	Torque	Tighten fingertight until seated. Plus 20° max angle of turn
P	–––	Torque	62–97 lb–in
20	MS20995C20	Lockwire	0.020 in. dia

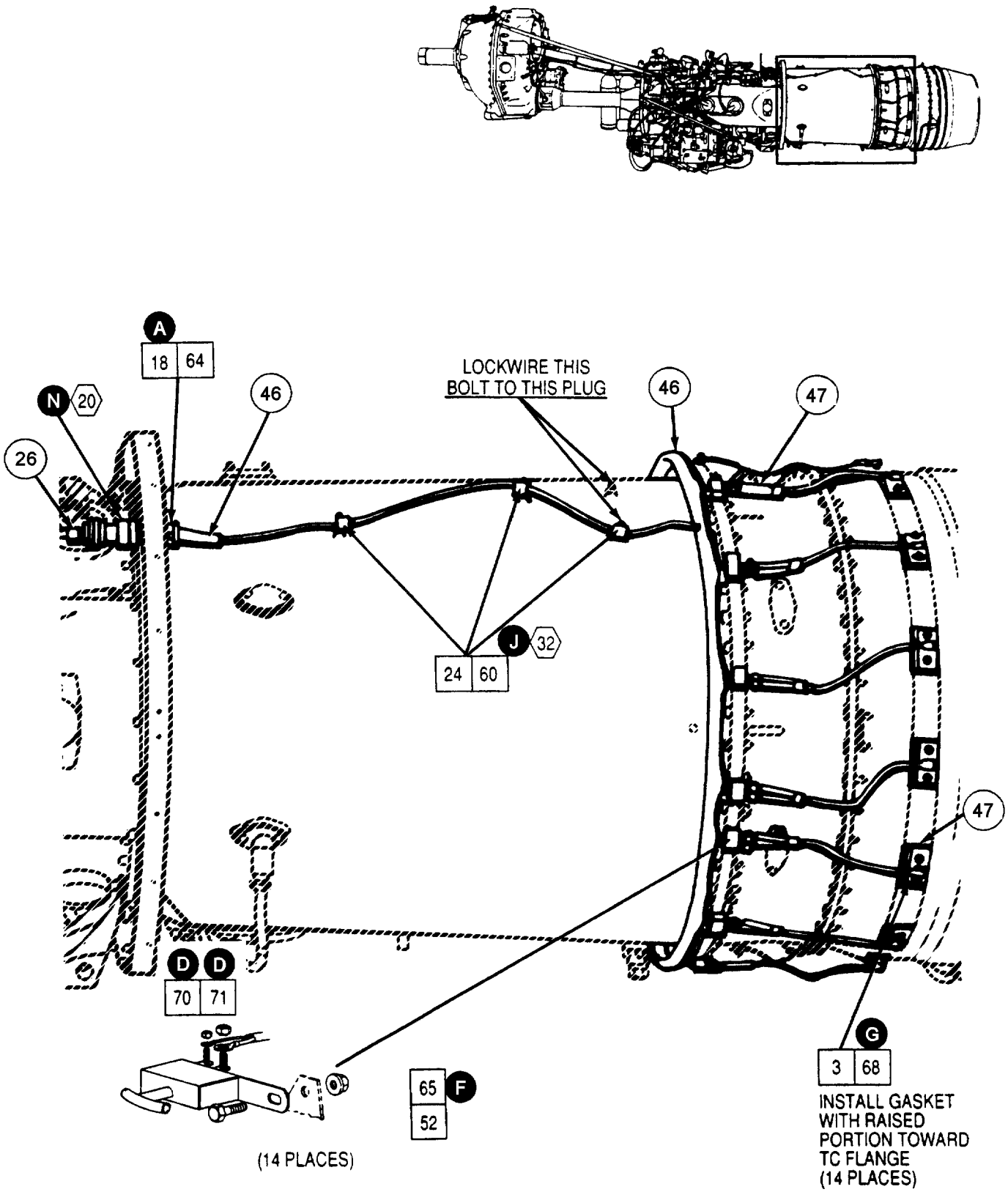

Figure 18. Zone 13 Detail View

Legend to Figure 18

Index Code	Part No.	Nomenclature	Specifications
3	23032357	Gasket, metallic thermocouple	
18	MS35275–228	Screw, fillister head, drilled	6–32 x 3/8 in. long
24	23052974–04 or 23052974–05	Clamp, loop–type	Select best fit
52	MS9489–05	Bolt, hex head	0.190–32 x 0.438 in. long
60	6871603–05	Bolt, double hex head, drilled	0.250–28 x 0.438 in. long
64	MS21043–06	Nut, self–locking	6–32
65	MS21043–3	Nut, self–locking	10–32
68	23009249 or 6848574	Nut, self–locking	1/4–28
70	6746974	Nut, self–locking, Chromel	8–32
71	6746975	Nut, self–locking, Alumel	10–32
A	–––	Torque	8–10 lb–in
D	–––	Torque	17–25 lb–in
F	–––	Torque	37–42 lb–in
G	–––	Torque	40–60 lb–in
J	–––	Torque	75–85 lb–in
N	–––	Torque	Tighten fingertight until seated. Plus 20° max angle of turn.
20	MS20995C20	Lockwire	0.020 in. dia
32	MS20995C32	Lockwire	0.032 in. dia

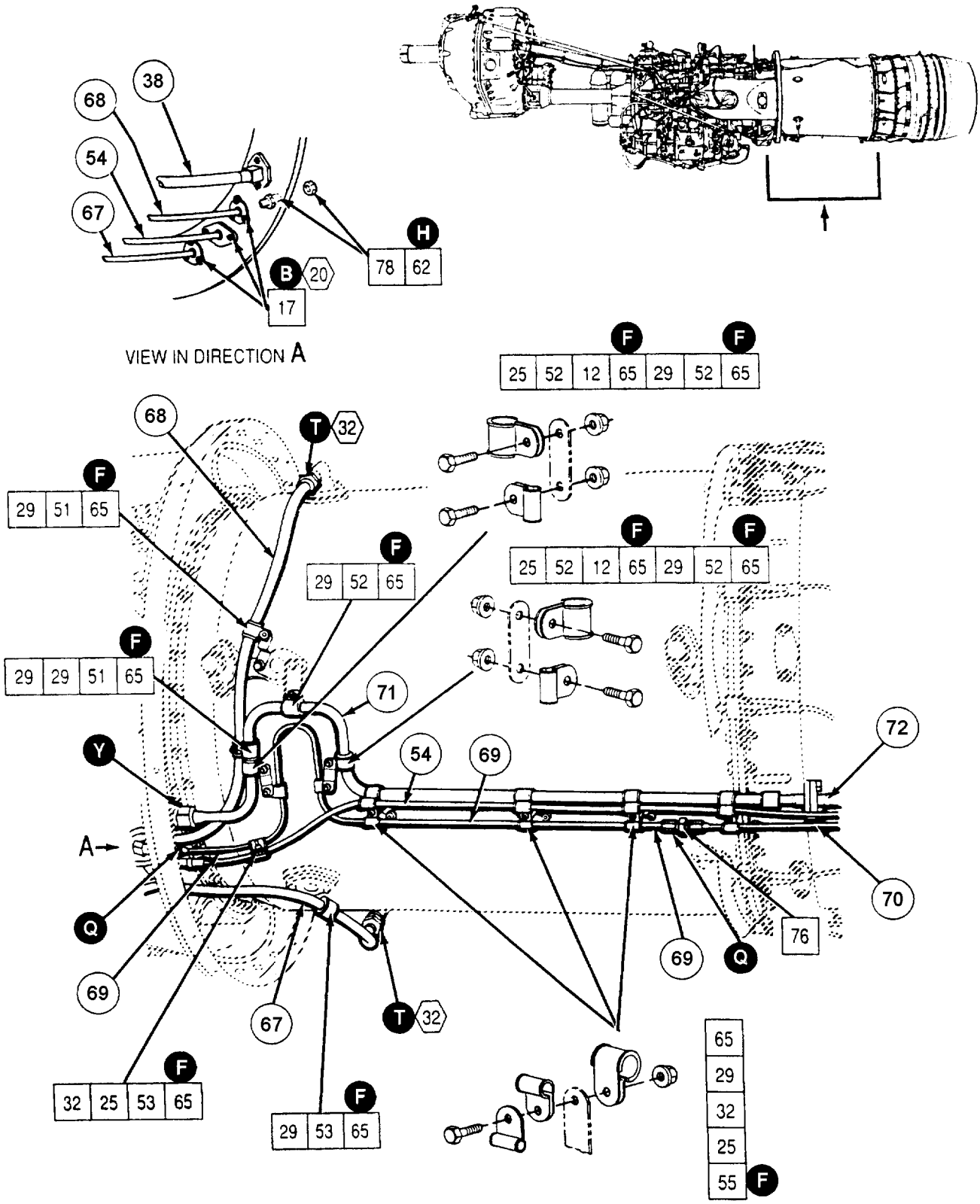

Figure 19. Zone 14 Detail View

Legend to Figure 19

Index Code	Part No.	Nomenclature	Specifications
12	MS9552–010	Plate, mending	1.000 in. long
17	AN500AC8–7	Screw, fillister head, drilled	8–32 x 7/16 in. long
25	6749387–02	Clamp, loop–type	
29	6749387–06	Clamp, loop–type	
32	6749387–03 or 6749387–04	Clamp, loop–type	Select best fit
51	MS9488–06	Bolt, hex head	0.164–36 x 0.500 in. long
52	MS9489–05	Bolt, hex head	0.190–32 x 0.438 in. long
53	MS9489–06	Bolt, hex head	0.190–32 x 0.500 in. long
55	MS9489–08	Bolt, hex head	0.190–32 x 0.625 in. long
62	AN924–3J	Nut, bulkhead	3/8–24
65	MS21043–3	Nut, self–locking	10–32
76	AN815–3J	Union	3/8–24
78	MS24393–3J	Nipple, bulkhead	3/8–24
B	–––	Torque	12–15 lb–in
F	–––	Torque	37–42 lb–in
H	–––	Torque	50–75 lb–in
Q	–––	Torque	65–100 lb–in
T	–––	Torque	100–120 lb–in
Y	–––	Torque	325–400 lb–in
20	MS20995C20	Lockwire	0.020 in. dia
32	MS20995C32	Lockwire	0.032 in. dia

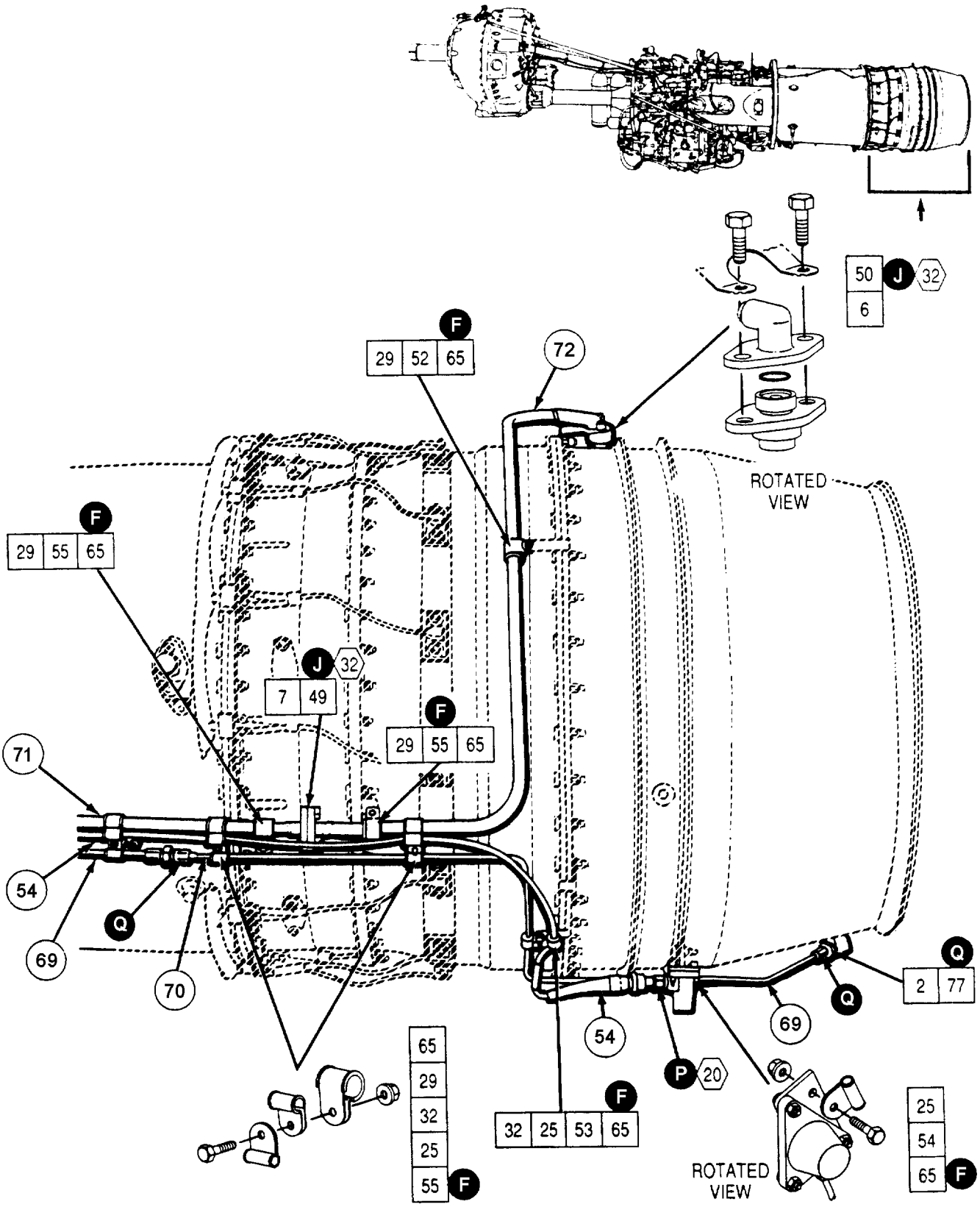

Figure 20. Zone 15 Detail View

Legend to Figure 20

Index Code	Part No.	Nomenclature	Specifications
2	23001146–3	Gasket, metal C–ring	
6	6784418–056	Seal, metallic O–ring	0.562 in. OD
7	6784418–062	Seal, metallic O–ring	0.625 in. OD
25	6749387–02	Clamp, loop–type	
29	6749387–06	Clamp, loop–type	
32	6749387–03 or 6749387–04	Clamp, loop–type	Select best fit
49	AN103807	Bolt, hex head, drilled	0.250–28 x 0.562 in. long
50	MS9061–07	Bolt, hex head, drilled	0.250–28 x 0.562 in. long
52	MS9489–05	Bolt, hex head	0.190–32 x 0.438 in. long
54	MS9489–07	Bolt, hex head	0.190–32 x 0.562 in. long
55	MS9489–08	Bolt, hex head	0.190–32 x 0.625 in. long
65	MS21043–3	Nut, self–locking	10–32
77	AN815–3S	Union	3/8–24
F	---	Torque	37–42 lb–in
J	---	Torque	70–85 lb–in
P	---	Torque	62–97 lb–in
Q	---	Torque	65–100 lb–in
32	MS20995C32	Lockwire	0.032 in. dia