NAVAIR 02B-5DG-6-1
15 November 2004
Change 7 - 1 March 2012

TECHNICAL MANUAL

INTERMEDIATE MAINTENANCE

TURBOPROP ENGINES

NAVY MODEL
T56-A-427

This manual is supplemented by and is incomplete without NAVAIR 02B-5DG-6-1-1 dated 15 November 2004.

DISTRIBUTION STATEMENT C. Distribution authorized to U.S. Government agencies only and their contractors to protect publications required for official use or for administrative or operational purposes only (15 July 2011). Other requests for this document shall be referred to Commander, Naval Air Systems Command (PMA-231), 47123 Buse Rd, Patuxent River, MD 20670-1547.

DESTRUCTION NOTICE - For unclassified, limited documents, destroy by any method that will prevent disclosure of contents or reconstruction of the document.

**PUBLISHED BY DIRECTION OF
COMMANDER, NAVAL AIR SYSTEMS COMMAND**

0802LP1121718

NUMERICAL INDEX OF EFFECTIVE WORK PACKAGES/PAGES

List of Current Changes

Original 0	15 Nov 2004	Change 4	1 May 2009
Change 1	1 July 2006 (incl IRAC 1)	Change 5	1 March 2010
Change 2	1 July 2007	Change 6	15 July 2011
Change 3	1 July 2008	Change 7	1 March 2012 (incl IRAC 2)

Only those work packages assigned to the manual are listed in this index. Dispose of superseded work packages. If changed pages are issued to a work package, insert the changed pages in the applicable work package. The portion of text affected in a changed or revised work package is indicated by change bars in the outer margin of each column of text. Changes to illustrations are indicated by pointing hands or change bars, as applicable.

Total number of pages in this manual is 1032 consisting of the following:

WP/ Page No.	Change No.
Title	7
A - D	7
E (blank)	7
TPDR-1	7
TPDR-2 (blank)	7
HMWS-1	6
HMWS-2	0
HMWS-3 - HMWS-4	6
HMWS-5 - HMWS-7	0
HMWS-8	6
HMWS-9	3
HMWS-10	0
HMWS-11	6
HMWS-12 (blank)	6
WP 001 00	
1 thru 24	1
WP 002 00	
1	3
2 thru 9	0
10	3
WP 003 00	
1	6
2 thru 3	1
4	5
5 thru 7	1
8	6
9 thru 12	1
13	5
14 (blank)	5
WP 004 00	
1 thru 2	6
3	3
4 thru 5	6
6	1
7	4
8 thru 9	1
10 (blank)	1
WP 005 00	
1 thru 14	0
WP 006 00	
1 thru 12	0
WP 007 00	
1 thru 6	0
WP 008 00	
1 thru 3	0
4 (blank)	0
5	0
6 (blank)	0
7 thru 10	0
WP 009 00	
1 thru 9	0
10 (blank)	0
WP 010 00	
1 thru 7	0
8 (blank)	0
WP 011 00	
1 thru 2	0
WP 012 00	
1 thru 4	0
WP 013 00	
1	6
2 thru 4	1
5 thru 8	6
9 thru 10 added	6
WP 014 00	
1 thru 4	0
WP 015 00	
1 thru 2	0
WP 016 00	
1 thru 10	0
WP 017 00	
1 thru 3	0
4 (blank)	0
WP 018 00	
1 thru 2	0
WP 019 00	
1	6
2 thru 9	1
10	6
11 thru 37	1
38 (blank)	1
WP 019 01	
Deleted	3
WP 020 00	
1 thru 5	0
6 (blank)	0
WP 021 00	
1 thru 6	0
WP 022 00	
1 thru 2	2
3 thru 7	1
8 (blank)	1

NUMERICAL INDEX OF EFFECTIVE WORK PACKAGES (CONT)

WP/ Page No.	Change No.
WP 023 00	
1	7
2 thru 19	0
20	3
21 thru 28	0
29 thru 31	7
32 thru 33	0
34	2
35 thru 42	0
43	7
44 thru 45	6
46	7
47 thru 49	6
50 thru 53	0
54	7
55	0
56	6
WP 024 00	
1 thru 4	5
WP 025 00	
1	7
2	0
3	5
4 thru 6	0
7	5
8 thru 33	0
34 thru 35	7
36 thru 55	0
56	5
56A	5
56B (blank)	5
57 thru 80	0
81	4
82	0
83	4
84	0
85	4
86	0
87	4
88 thru 89	0
90	5
91 thru 111	0
112 (blank)	0
113	0
114 (blank)	0
WP 026 00	
1	2
2 thru 5	0
6	2
WP 027 00	
1	2
2 thru 6	0
7 thru 8	2
9	0
10	2
11 thru 16	0
WP 028 00	
1	2
2 thru 9	1
10	2
11 thru 12	1
WP 029 00	
1 thru 7	0
8 (blank)	0
WP 030 00	
1	6
2 thru 5	1
6 thru 11	6
12 (blank)	6
WP 031 00	
1	6
2 thru 6	0
7	6
8	0
WP 032 00	
1 thru 2	0
WP 033 00	
1 thru 5	0
6 (blank)	0
WP 034 00	
1 thru 7	3
8 (blank)	3
WP 035 00	
1 thru 3	0
4 (blank)	0
WP 036 00	
1 thru 3	0
4 (blank)	0
WP 037 00	
1	2
2	0
3	2
4 thru 5	0
6 (blank)	0
WP 038 00	
1 thru 2	6
3 thru 17	0
18 thru 25	3
26 (blank)	3
WP 039 00	
1	6
2	3
3 thru 4	6
5	5
6 thru 7	3
8	5
9 thru 13	3
14	6
15 thru 20	3
WP 040 00	
1	2
2 thru 32	1
33	2
34	1
35	2
36	1
37	2
38 thru 42	1
WP 041 00	
1 thru 8	0
WP 042 00	
1 thru 10	0
WP 043 00	
1 thru 3	0
4 (blank)	0
WP 044 00	
1 thru 10	0
WP 045 00	
1 thru 11	0
12 (blank)	0
WP 046 00	
1	4
2 thru 7	0
8	3
9	4
10	2

NUMERICAL INDEX OF EFFECTIVE WORK PACKAGES (CONT)

WP/ Page No.	Change No.
WP 047 00	
1 thru 14	0
WP 048 00	
1	6
2 thru 3	1
4 thru 12	6
13 Added	6
14 (blank) Added	6
WP 049 00	
1	6
2 thru 11	0
12	2
13 thru 22	0
23	2
24 thru 25	0
26	6
27	0
28 (blank)	0
WP 050 00	
1 thru 2	0
WP 051 00	
1 thru 2	3
3 thru 4	0
WP 052 00	
1 thru 3	0
4 (blank)	0
WP 053 00	
1 thru 11	1
12 (blank)	1
WP 054 00	
1	3
2 thru 6	0
7	3
8 thru 10	0
11	3
12 thru 13	0
14 thru 15	3
16 thru 17	0
18 thru 27	3
28 (blank)	3
WP 055 00	
1	6
2	3
3 thru 9	1
10	3
11	1
12	3
13 thru 15	1
16 thru 20	6
WP 056 00	
1 thru 4	0
WP 057 00	
1 thru 4	0
WP 058 00	
1 thru 5	0
6 (blank)	0
WP 059 00	
1 thru 5	0
6 (blank)	0
WP 060 00	
1 thru 4	0
WP 061 00	
1 thru 7	0
8 (blank)	0
WP 062 00	
1 thru 3	0
4 (blank)	0
WP 063 00	
1 thru 2	0
WP 064 00	
1 thru 11	0
12 (blank)	0
WP 065 00	
1	3
2	0
3	3
4	0
5	3
6	0
WP 066 00	
1 thru 4	0
WP 067 00	
1 thru 3	0
4 (blank)	0
WP 068 00	
1 thru 3	3
4 (blank)	3
WP 069 00	
1 thru 2	0
WP 070 00	
1	3
2 thru 4	0
5	3
6 (blank)	3
WP 071 00	
1 thru 3	3
4 (blank)	3
WP 072 00	
1 thru 5	0
6 (blank)	0
WP 073 00	
1 thru 3	0
4 (blank)	0
WP 074 00	
1 thru 3	0
4 (blank)	0
WP 075 00	
1 thru 3	0
4 (blank)	0
WP 076 00	
1 thru 3	0
4 (blank)	0
WP 077 00	
1 thru 3	3
4 (blank)	3
WP 078 00	
1 thru 3	3
4	0
WP 079 00	
1 thru 4	0
WP 080 00	
1 thru 3	0
4 (blank)	0
WP 081 00	
1 thru 6	0
WP 082 00	
1 thru 4	0

NUMERICAL INDEX OF EFFECTIVE WORK PACKAGES (CONT)

WP/ Page No.	Change No.
WP 083 00	
1 thru 4	0
WP 084 00	
1 thru 3	0
4 (blank)	0
WP 085 00	
1 thru 5	0
6 (blank)	0
WP 086 00	
1 thru 3	0
4 (blank)	0
WP 087 00	
1 thru 4	0
WP 088 00	
1 thru 3	0
4 (blank)	0
WP 089 00	
1 thru 4	0
WP 090 00	
1 thru 4	0
WP 091 00	
1 thru 3	0
4 (blank)	0
WP 092 00	
1 thru 4	0
WP 093 00	
1 thru 4	0
WP 094 00	
1	6
2 thru 6	1
7 thru 8	3
9 thru 14	1
15 thru 17	3
18	2
19 thru 25	1
26	2
27 thru 40	1
41	6
42 thru 44	1
45 thru 46	6
47 thru 88	1

LIST OF TECHNICAL PUBLICATIONS DEFICIENCY REPORTS INCORPORATED

INTERMEDIATE MAINTENANCE

TURBOPROP ENGINE

MODEL T56-A-427

The List of Technical Publications Deficiency Reports (TPDR) is not cumulative. At each change to the manual, the list is revised to delete previous entries. If no TPDR data is applicable to the current change, the word “None” is entered in the report control number column.

Valid TPDR data incorporated in the current change will be entered by reporting activity TPDR originator report control number in the Report Control Number column and the location of the data in the Location column. Incorporated data is identified by work package number (WP), page number (Pg), paragraph number (P), figure number (F) and table number (T) as appropriate.

Report Control Number	Location
N44328-11-0126	WP 023 00 Pgs 29, 30, 31
N65886-12-7817	WP 023 00 Pgs 43, 46, 54
N65886-12-7819	WP 025 00 Pgs 34, 35

WARNINGS APPLICABLE TO HAZARDOUS MATERIALS

Warnings in this manual alert personnel to hazards associated with the use of hazardous materials. Additional information related to hazardous materials is provided in OPNAVINST 5100.23, Navy Occupational Safety and Health (NAVOSH) program manual, NAVSUPINST 5100.27, Navy Hazardous Material Control Program, and the DOD 6050.5, Hazardous Materials Information System (HMIS) series publications. For each hazardous material used within the Navy, a Material Safety Data Sheet (MSDS) must be provided and available for review by users. Consult your local safety and health staff concerning any questions regarding hazardous materials, MSDS, personal protective equipment requirements, appropriate handling and emergency procedures, and disposal guidance.

Under the heading **HAZARDOUS MATERIALS WARNINGS**, complete warnings, including related icon(s) and a numeric identifier, are provided for hazardous materials used in this manual. Each hazardous material is assigned only one numeric identifier. Since only those hazardous materials addressed in this manual will be listed, the numeric identifiers may not appear in sequential order.

In the text of the manual, the caption **WARNING** is not used for hazardous material warnings. Hazards are cited with appropriate icon(s), the nomenclature of the hazardous material, and the numeric identifier that relates to the complete warning. Users of hazardous materials shall refer to the complete warnings, as necessary.

EXPLANATION OF HAZARDOUS MATERIALS ICONS

Biological

The abstract symbol bug shows that a material may contain bacteria or viruses that present a danger to life or health.

Chemical

The symbol of a drop of a liquid burning a hand shows a material that causes burns to human skin or tissue.

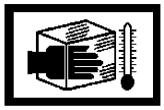

Cryogenic

The symbol of a hand in a block of ice shows that the material is extremely cold and can injure human skin or tissue.

Explosion

This rapidly expanding symbol shows that the material may explode if subjected to high temperature, sources of ignition, or high pressure.

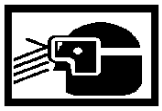

Eye Protection

The symbol of a person wearing goggles shows a material that can injure your eyes.

Fire

The symbol of a fire shows that a material can ignite and burn you.

Poison

The symbol of skull and crossbones shows that a material is poisonous or is a danger to life.

Radiation

The symbol of three circular wedges shows that the material emits radioactive energy and can injure human tissue or organs.

Vapor Hazard

The symbol of a human figure in a cloud shows that breathing this material can present a health hazard.

HAZARDOUS MATERIALS WARNINGS

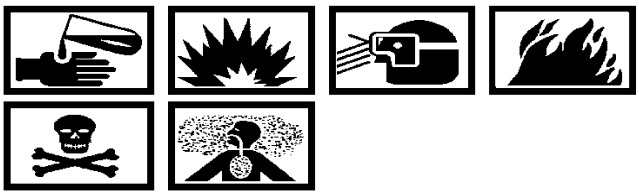

Carbon Removing Compound
MIL-C-25107 **1**

Carbon Removing Compound MIL-C-25107, is flammable, toxic and has harmful vapor. Keep container tightly closed when not in use. Keep away from heat, sparks and open flames. Use in well-ventilated area. Wear chemical splashproof goggles and gloves. Avoid contact with clothing, eyes and skin. Wash hands thoroughly with soap and water after use.

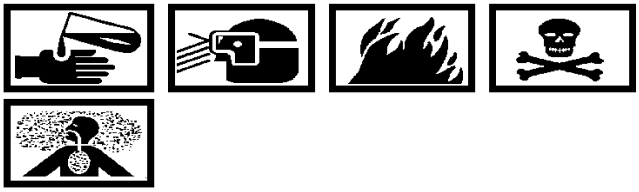

Lubricating Oil, MIL-PRF-23699 **2**

Lubricating Oil MIL-PRF-23699, if decomposed by heat, releases toxic gases. Prolonged contact with liquid or mist may cause dermatitis and irritation. The tri-cresyl-phosphate additive of synthetic oil conforming to Spec MIL-PRF-23699 is readily absorbed by the skin and is highly toxic. Any part of the body that comes in contact with the oil shall be cleaned immediately. In case of prolonged contact with skin, wash with soap and water. Remove saturated clothing. Eye contact: Flush with water immediately. Ingestion: Do not induce vomiting; get medical attention. When handling liquid, wear rubber gloves. If prolonged contact with mist is likely, wear approved respirator.

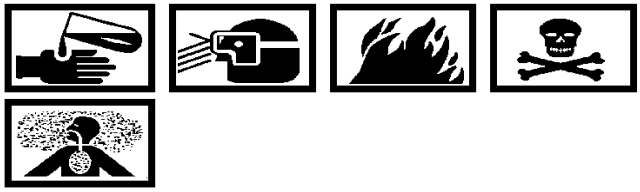

Dry Cleaning Solvent
MIL-PRF-680, Type II **3**

Dry Cleaning Solvent MIL-PRF-680, Type II, is flammable, toxic, a skin irritant and an inhalation hazard. Keep away from heat, sparks and open flames. Do not use synthetic cloth for wiping with dry cleaning solvent. Metal containers of solvent shall be grounded to prevent sparking and fires. Do not smoke, eat or drink when using solvent. Use in well-ventilated area. Avoid prolonged breathing of vapor and skin contact, which can cause dermatitis, irritated nose and throat, and dizziness. Ingestion will cause gastrointestinal irritation. Wear approved gloves, goggles, coveralls and respirator. Inhalation: Remove to fresh air if vapor causes dizziness. Skin contact: Flush with water; remove solvent-saturated clothing. Get medical attention.

Paint Thinner TT-T-291 **4**

Paint Thinner TT-T-291, is toxic and combustible. Overexposure may produce headache, dizziness, nausea, and severe skin and eye irritation. Protection: Chemical splashproof goggles, gloves, and good ventilation. Keep container closed. Keep sparks, flames, and heat away. Keep off skin, eyes, and clothes. Do not breathe vapors. Respiratory protection may be required depending on work task(s) and location. Insure good personal hygiene prior to eating, drinking, or smoking.

Dry Cleaning Solvent Envirosolv
CRX-2-5313 **5**

Dry Cleaning Solvent Envirosolv CRX-2-5313, is toxic, a skin irritant and an inhalation hazard. Keep away from heat, sparks and open flames. Do not smoke, eat or drink when using solvent. Use in well-ventilated area. Avoid prolonged breathing of vapor and skin contact. Skin contact may cause defatting and irritation of eyes, nose, throat and skin. Inhalation of high concentration of vapor may cause drowsiness and irritation of respiratory tract, which can cause dermatitis, irritated nose and throat and dizziness. Ingestion will cause gastrointestinal irritation. Wear approved gloves, goggles, coveralls and respirator. Inhalation: Remove to fresh air if vapor causes drowsiness. Skin contact: Flush with water; remove solvent-saturated clothing. Get medical attention.

Corrosion Preventive Compound MIL-C-6529 **6**

Corrosion Preventive Compound MIL-C-6529, is flammable, toxic and has harmful vapor. Keep container tightly closed when not in use. Keep away from heat, sparks and open flames. Use in well-ventilated area. Wear chemical splashproof goggles and gloves. Avoid contact with clothing, eyes and skin. Wash hands thoroughly with soap and water after use.

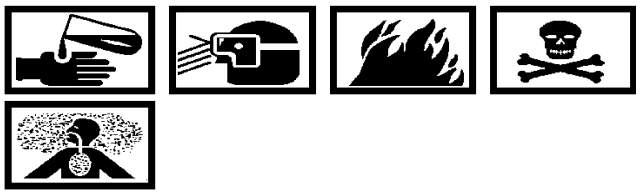

Lubricating Oil, MIL-PRF-6081, (Grade 1010) **7**

Lubricating Oil MIL-PRF-6081 Grade 1010, is flammable, toxic and an irritant. Keep away from heat, sparks and open flames. Use in well-ventilated area, especially when exposure to hot oil or mist is possible. Eye contact: Flush with water for 15 minutes; get medical attention. Skin contact: Wash with soap and water. Inhalation: Remove to fresh air; get medical attention. Ingestion: Do not induce vomiting; get medical attention. Wash hands with soap and water after use and before eating, drinking or smoking.

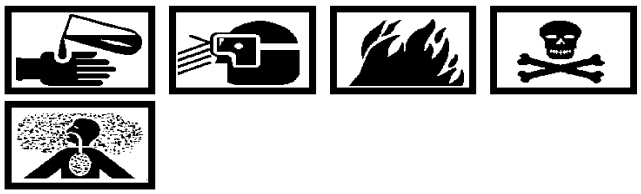

Dry Cleaning Solvent (Isoprep) **8**

Solvent, Cleaning, Trichloroethane MIL-T-81533 **9**

Solvent, Cleaning, Trichloroethane MIL-T-81533, is not flammable, but is corrosive to aluminum and magnesium in the presence of water, heat and small metallic particles such as vapor degreasers. Do not atomize. Use only as wipe or dip solvent in cold or ambient conditions or in authorized vapor degreasers. Use in well-ventilated area. Avoid breathing vapor and eye and skin contact. Eye or skin contact: Flush with water; get medical attention.

DELETED **10**

DELETED **11**

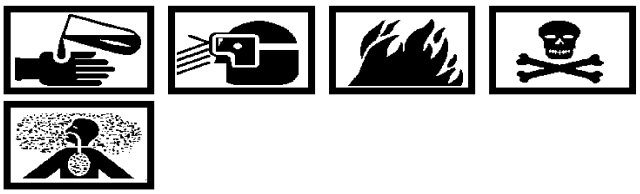

Sodium Dichromate Magnesium Treatment (Chrome Pickle) AMS-M-3171, Type VI (Dow 19) **12**

Sodium Dichromate Magnesium Treatment (Chrome Pickle) AMS-M-3171, Type IV (Dow 19), is a strong oxidizer which supports combustion to skin, eyes and mucous membranes. It can also cause irritation and ulcers of the nasal septum as well as irritation and damage to the respiratory system. Wear neoprene gloves, chemical goggles and rubber apron during magnesium treatment operation. Wear respirator when handling the material in powder form and during spraying operations.

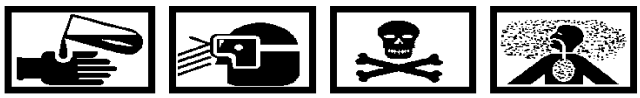

Silicone Resin R-671 (DOW) **13**

Silicone Resin R-671 (DOW), is toxic and is an inhalation hazard. Avoid prolonged breathing of vapor. Excessive or repeated skin contact can cause toxic effects, dermatitis and eye and throat irritation. Skin or eye contact: Flush with water. Inhalation: Remove to fresh air if vapor causes dizziness.

DELETED **14**

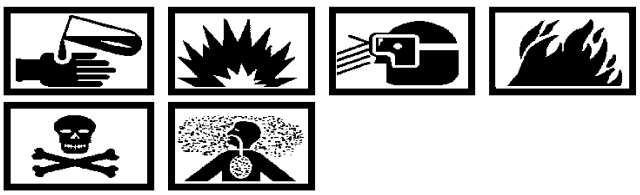

High Solids Epoxy Primer MIL-PRF-23377 **15**

High Solids Epoxy Primer MIL-PRF-23377, is toxic and flammable. Contains chromium compounds which may cause cancer and is irritating to eyes and skin. Overexposure may cause lightheadedness, nausea, narcosis, etc. Protection: Chemical splashproof goggles, gloves, and good ventilation (or respirator). Keep container closed. Keep sparks, flames and heat away. Keep primer off skin, eyes and clothes. Do not breathe vapors. Insure good personal hygiene prior to eating, drinking, or smoking.

Chromic Acid O-C-303 **16**

Chromic Acid O-C-303, is highly reactive - do not mix with combustible organics or other oxidizable materials such as wood, paper and cloth. When heated, toxic gases are released. Contact of skin with liquid or inhalation of mist can cause severe burns, respiratory tract irritation and chronic bronchitis. When handling solution or concentrated liquid in open tank, wear approved respirator, full-body clothing, gloves and goggles.

Fluorescent Dye Penetrant ZA-43 **17**

Fluorescent Dye Penetrant ZA-43, is flammable, toxic and an irritant. Keep away from heat, sparks and open flames. Use in well-ventilated area. Eye contact: Flush with cold water; get medical attention. Skin contact: Wash with soap and water. Inhalation: Remove to fresh air; get medical attention. Ingestion: Do not induce vomiting; get medical attention. Wash hands with soap and water after use and before eating, drinking or smoking.

General Purpose Grease MIL–PRF–23827 18

General Purpose Grease MIL–PRF–23827, is toxic and is an irritant to the eyes and skin. Protection: Safety glasses, oil–resistant gloves, and good ventilation. Keep sparks, flames, and heat away. Keep off skin, eyes, and clothes. Do not breathe vapors. Insure good personal hygiene prior to eating, drinking, or smoking.

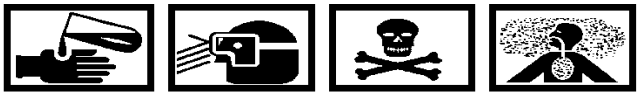

Molybdenum Disulfide Lubricant SAE–AMS–M–7866 19

Molybdenum Disulfide Lubricant SAE–AMS–M–7866, is toxic and an irritant. Avoid skin and eye contact, do not breathe dust or swallow. Eye contact: Flush with water for 15 minutes; get medical attention. Inhalation: Remove to fresh air; get medical attention. Skin contact: Wash with soap and water, remove contaminated clothing; get medical attention if irritation persists. Ingestion: Do not induce vomiting; get medical attention. Wash hands with soap and water after use and before eating, drinking or smoking.

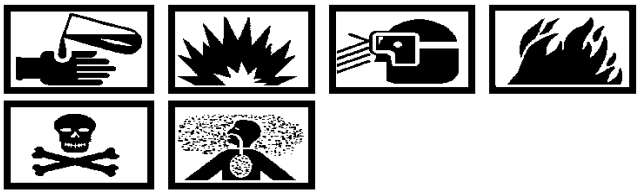

Zinc Chromate Primer TT–P–1757 20

Zinc Chromate Primer TT–P–1757, is flammable, toxic and an inhalation hazard. Keep away from heat, sparks and open flames. Wear goggles or face shield, air–supplied or cartridge respirator, rubber gloves and coveralls during all primer mixing and spraying operations. Primer contains zinc chromate corrosion inhibiting pigments. Airborne mist is toxic. Avoid prolonged breathing of vapor. Prolonged or repeated skin contact can have a toxic effect on affected skin areas.

Corrosion Preventative Compound MIL–C–16173 Grade 1 (Hard Film) 21

Corrosion Preventative Compound MIL–C–16173 Grade 1, is flammable, toxic and has harmful vapor. Keep container tightly closed when not in use. Keep away from heat, sparks and open flames. Use in well–ventilated area. Wear chemical splashproof goggles and gloves. Avoid contact with clothing, eyes and skin. Wash hands thoroughly with soap and water after use.

Corrosion Preventative Compound MIL–C–16173 Grade 2 (Soft Film) 22

Corrosion Preventative Compound MIL–C–16173 Grade 2, is toxic and combustible. May cause skin and eye irritation. Overexposure may cause dizziness and narcosis. Protection: Chemical splashproof goggles, gloves, and good ventilation. Keep container closed. Keep compound off skin, eyes, and clothes. Do not breathe vapors. Insure good personal hygiene prior to eating, drinking, or smoking.

Dry Nitrogen A–A–59503 Type I Grade A or B Class 1 23

Dry Nitrogen A–A–59503 Type I Grade A or B Class 1, can displace air, causing asphyxiation, and pressurized nitrogen can accelerate particles which can cause injury if they strike eyes. Use in well–ventilated area. Wear eye protection if nitrogen is under pressure.

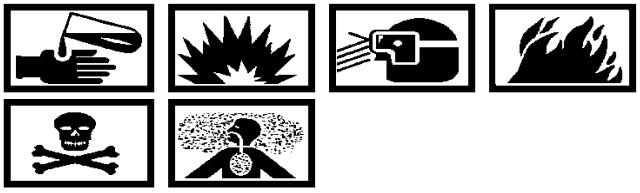

Aviation Turbine Fuel MIL–T–5624 (Grade JP–4, JP–5) 24

Aviation Turbine Fuel MIL–T–5624 (Grade JP–4, JP–5) MIL–T–83133A (Grade JP–8), is flammable, toxic and an irritant. Vapor can form explosive mixture with air. Keep away from heat, sparks and open flames. Dispose of saturated rags or paper properly to avoid spontaneous combustion. Use in well–ventilated area. Ingestion: Do not induce vomiting; get medical attention. Eye contact: Flush with water; get medical attention. Skin contact: Wash with soap and water. Remove clothing wet with aviation turbine fuel and launder before reuse. Inhalation: Remove to fresh air; get medical attention. Wash hands with soap and water after use and before eating, drinking or smoking.

Hydraulic Fluid MIL–H–83282 25

Hydraulic Fluid MIL–H–83282, is toxic. Protection: Chemical splashproof goggles and gloves. Keep fluid off skin, eyes and clothes. Wear gloves and oil–impervious apron when feasible. Wash affected area, change clothing if applicable. Avoid prolonged skin exposure. Insure good personal hygiene prior to eating, drinking, or smoking.

Cleaning Compound B & B 3100, TC–100 and ZOC–27 26

Cleaning Compound B & B 3100, TC–100 and ZOC–27, are petroleum distillates containing aromatic and aliphatic hydrocarbons. They are combustible and an inhalation hazard. Keep away from heat, sparks and open flames. Avoid prolonged breathing of vapor and contact with skin because they can cause dermatitis, irritated nose and throat, and dizziness. Wear approved gloves and goggles.

Methyl Ethyl Ketone MIL–M–13999 27

Methyl Ethyl Ketone MIL–M–13999, is flammable and toxic. Keep away from heat, sparks and open flames. Use in well–ventilated area. Wear splashproof goggles, solvent resistant gloves and coveralls. Eye contact: Flush with water; get medical attention.

Methyl Ethyl Ketone TT–M–261 28

Methyl Ethyl Ketone TT–M–261, is toxic, flammable, and irritating to eyes and skin. May cause dizziness, narcosis, nausea and vomiting (overexposure). Do not use in confined areas. Protection: Chemical splashproof goggles, gloves, and good ventilation. Keep container closed. Keep sparks, flames, and heat away. Keep M–E–K off skin, eyes, and clothes. Do not breathe vapors. Use of respiratory protection may be required, depending on work task(s) and location. Insure good personal hygiene prior to eating, drinking, or smoking.

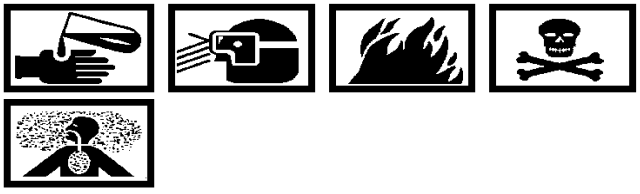

Chemical Conversion Coating MIL–C–5541 29

Chemical Conversion Coating MIL–C–5541, is toxic and flammable. Avoid contact with skin and eyes. Avoid breathing vapors; upper respiratory tract irritation or damage may occur. May be harmful or fatal if swallowed. Contains chromic acid, a systemic poison and may aggravate pre–existing conditions. Wash hands and face with soap and water after use and before smoking or eating. Immediately remove contaminated clothing and launder before reuse. Avoid humidity, strong acids, alkalis, reducing compounds, flammable or combustible material. Store in a dry area in tightly closed containers. Store away from oils, greases, and corrosives. When mixing; add slowly to water while mixing. Protection: rubber gloves, chemical goggles, faceshield, and laboratory apron; respirator with acid/organic vapor cartridge and mist prefilter is required during spray operations or in poorly ventilated areas.

Dry Film Lubricant DOD-L-25681 **30**

Dry Film Lubricant DOD-L-25681, in the liquid or spray as-applied form, is flammable, toxic and contains a solvent whose fumes are toxic. When heated above 700°F, the dried, cured solid film can emit harmful fumes. Keep away from heat, sparks and open flames. Do not machine, abrade or grind solid film in such a way as to put particles into breathing air. Use in well-ventilated area. Avoid contact with skin, eyes and clothing. Avoid breathing vapor. Wear chemical splashproof goggles and gloves. Wash hands with soap and water after use and before eating, drinking or smoking.

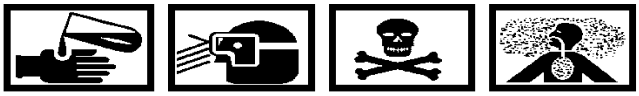

Adhesive Sealant Silicone RTV, MIL-A-46106 **31**

Adhesive Sealant Silicone RTV MIL-A-46106, releases acetic acid vapor. Uncured adhesive/sealant may irritate eyes. Avoid direct contact. Maintain in well-ventilated area during curing period.

Anti-seize Compound (Never Seez) NS165 **32**

Anti-seize Compound (Never Seez) NS165, is somewhat flammable, toxic and an irritant. Keep away from heat, sparks and open flames. Use in well-ventilated area. Eye contact: Flush with water; get medical attention. Skin contact: Wash with soap and water. Ingestion: Do not induce vomiting; get medical attention. Wash hands with soap and water after use and before eating, drinking or smoking.

Petrolatum Lubricant VV-P-236 **33**

Petrolatum Lubricant VV-P-236, is toxic and when heated can emit harmful fumes. Avoid contact with skin, eyes and clothing. Wash hands with soap and water after use.

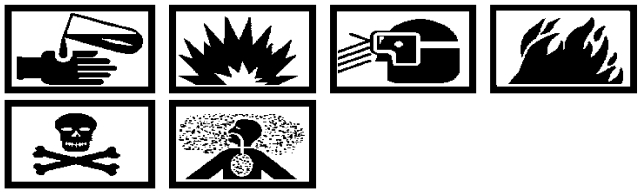

Sealing Compound Permatex No. 1372 or Loctite 30558 **34**

Sealing Compound Permatex No. 1372 or Loctite 30558, is flammable and toxic. Keep product and its vapor away from heat, sparks and open flames. Use in well-ventilated area. Avoid prolonged breathing of vapor. Avoid contact with eyes and skin. Keep container tightly closed when not in use.

Antiseize Thread Compound MIL-A-907 **35**

Antiseize Thread Compound MIL-A-907, is toxic and is an irritant to the eyes and skin. Protection: Safety glasses, oil-resistant gloves, and good ventilation. Keep sparks, flames, and heat away. Keep off skin, eyes, and clothes. Do not breathe vapors. Insure good personal hygiene prior to eating, drinking, or smoking.

Epoxy Resin Armstrong A-2 **36**

Epoxy Resin Armstrong A-2, may cause skin sensitization or other allergic reaction. Use in well-ventilated area. Use personal protective equipment. Skin contact: Wash immediately with soap and water. Get medical attention for any eye or internal contact.

General Purpose Aircraft Grease MIL-PRF-81322 **37**

General Purpose Aircraft Grease MIL-PRF-81322, is combustible. It is an eye irritant and upon prolonged exposure, a skin irritant. Keep away from flames, high temperatures and oxidizing agents. Store in a cool dry place. protection: Neoprene gloves, and chemical goggles. Insure good personal hygiene prior to eating, drinking, or smoking.

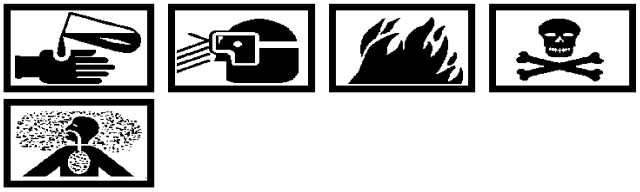

Polyurethane Coating MIL-PRF-85285, **38**

Polyurethane Coating MIL-PRF-81773, is toxic and flammable. Protection: Chemical splashproof goggles, gloves, and good ventilation. Keep container closed. Keep sparks, flames and heat away. Keep compound off skin, eyes, and clothes. Do not breathe vapors. Respiratory protection is required when using this material. Some colors may contain lead. Tyvek - type coveralls or other clothing shall be worn in lieu of street garments or uniforms. Symptoms of overexposure may include severe allergic or asthma-like responses. Prior to spraying, personnel should receive pre-placement isocyanate physicals. Insure good personal hygiene prior to eating, drinking, or smoking.

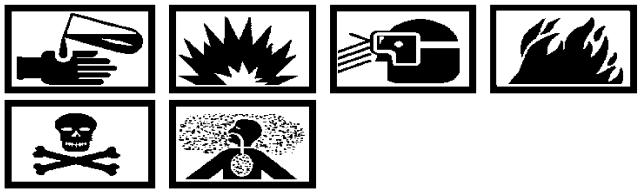

Paint, Aluminum (Polytherm) **39**

Paint, Aluminum (Polytherm), is flammable, toxic and an inhalation hazard. Keep away from heat, sparks and open flames. Wear goggles or face shield, air-supplied or cartridge respirator, rubber gloves and coveralls during all paint mixing and spraying operations. Avoid prolonged breathing of vapor. Prolonged or repeated skin contact can have a toxic effect on affected skin areas.

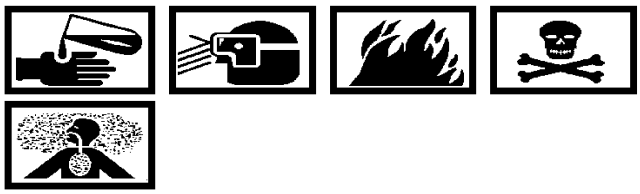

Resin Coating Thermosetting MIL-PRF-3043 **40**

Resin Coating Thermosetting MIL-PRF-3043, is flammable and toxic. Keep away from heat, sparks and open flames. Use in well-ventilated area. Wear solvent-resistant gloves, splashproof goggles and coveralls. Eye contact: Flush with water; get medical attention.

Sealing Compound PL32M (Hylomar) **41**

Sealing Compound PL32M (Hylomar), is flammable and toxic. Keep product and its vapor away from heat, sparks and open flames. Use in well-ventilated area. Avoid prolonged breathing of vapor. Avoid contact with eyes and skin. Keep container tightly closed when not in use.

Dry Cleaning Solvent MIL-C-5546 **42**

Dry Cleaning Solvent MIL-C-5546, is a high flash point dry cleaning solvent and is toxic, a skin irritant and an inhalation hazard. Keep away from heat, sparks and open flames. Do not smoke, eat or drink when using solvent. Use in well-ventilated area. Avoid prolonged breathing of vapor and skin contact. Skin contact may cause defatting and irritation of eyes, nose, throat and skin. Inhalation of high concentration of vapor may cause drowsiness and irritation of respiratory tract, which can cause dermatitis, irritated nose and throat and dizziness. Ingestion will cause gastrointestinal irritation. Wear approved gloves, goggles, coveralls and respirator. Inhalation: Remove to fresh air if vapor causes drowsiness. Skin contact: Flush with water; remove solvent-saturated clothing. Get medical attention.

Denatured Ethyl Alcohol MIL-A-6091 **43**

Denatured Ethyl Alcohol MIL–A–6091 **43**

Denatured Ethyl Alcohol MIL–A–6091, is flammable and toxic. Avoid breathing vapor. Use in well–ventilated area. Keep away from heat, sparks or open flames. Wear splashproof goggles, solvent resistant gloves and other protective gear. Eye contact: Flush with water; get medical attention.

Paint Thinner Actithane H251 **44**

Paint Thinner Actithane H251, is toxic and combustible. Overexposure may produce headache, dizziness, nausea, and severe skin and eye irritation. Protection: Chemical splashproof goggles, gloves, and good ventilation. Keep container closed. Keep sparks, flames, and heat away. Keep off skin, eyes, and clothes. Do not breathe vapors. Respiratory protection may be required depending on work task(s) and location. Insure good personal hygiene prior to eating, drinking, or smoking.

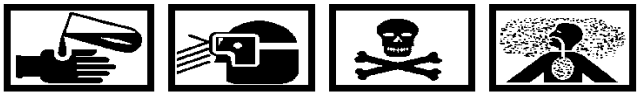

Chemical Conversion Coating MIL–DTL–81706 **45**

Chemical Conversion Coating, MIL–DTL–81706, is a strong oxidizer which supports combustion to skin, eyes and mucous membranes. It can also cause irritation and ulcers of the nasal septum as well as irritation and damage to the respiratory system. Wear neoprene gloves, chemical goggles and rubber apron during conversion coating operation. Wear respirator when handling the material in powder form and during spraying operation.

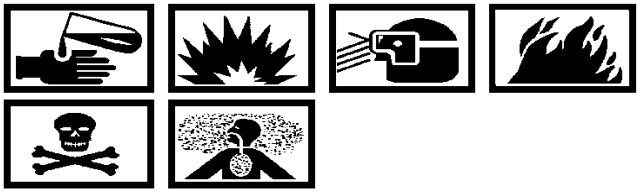

Sealing Compound, (Buna–N) MIL–S–4383 **46**

Sealing Compound, (Buna–N), MIL–S–4383, is flammable and toxic. Keep product and its vapor away from heat, sparks and open flames. Use in well–ventilated area. Avoid prolonged breathing of vapor. Avoid contact with eyes and skin. Keep container tightly closed when not in use.

Elastomeric Sealing Compound MIL–S–8802 Type I Class A **47**

Elastomeric Sealing Compound MIL–S–8802 Type I Class A, contains a chromium compound which is readily absorbed through the skin. The base component contains methyl ethyl ketone and toluene solvents. Keep away from heat, sparks and open flames. Use in well–ventilated area. Avoid repeated or prolonged breathing of vapor and skin contact. Use rubber gloves and goggles. Skin contact: Apply lanolin–base hand cream. Wash hands with soap and water after use and before eating, drinking or smoking. Consult the Material Safety Data Sheet for additional health and safety information.

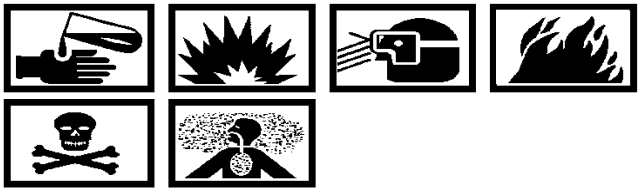

Sealant EC–776 **48**

Sealant EC–776, is toxic and flammable. Keep away from heat, sparks and open flames. Use in well–ventilated area. Avoid prolonged breathing of vapor and eye and skin contact. Keep container tightly closed when not in use.

Dykem Layout Dye (various colors) 49

Dykem Layout Dye (various colors), is flammable, toxic and an irritant. Keep away from heat, sparks and open flames. Use in well–ventilated area. Eye contact: Flush with cold water; get medical attention. Skin contact: Wash with soap and water. Inhalation: Remove to fresh air; get medical attention. Ingestion: Do not induce vomiting; get medical attention. Wash hands with soap and water after use and before eating, drinking or smoking.

Thread Locking Compound MIL–S–46163 Type II Grade M 50

Thread Locking Compound MIL–S–46163 Type II Grade M, may cause dermatitis on prolonged contact. Avoid prolonged skin contact. Protection: rubber gloves, chemical goggles and protective skin compound.

Silicone Compound MIL–S–8660 51

Silicone Compound MIL–S–8660, is a skin and eye irritant and may be combustible. Avoid skin and eye contact. Avoid contact with extreme heat or oxidizing materials. Protection: Chemical splashproof goggles and rubber gloves. Insure good personal hygiene prior to eating, drinking, or smoking.

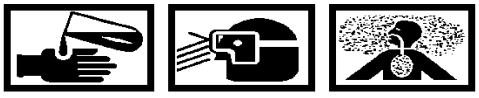

Assembly Fluid 1 52

Assembly Fluid 1, is non–toxic and non–flammable. May cause skin irritation seen as local redness and/or burns. May cause eye irritation seen as excess redness of the conjunctiva and/or burns. Avoid contact with skin and eyes. Avoid inhaling vapors, may cause irritation of the nose and throat, accompanied by cough and chest discomfort. Keep containers closed when not in use. Protection: Chemical splashproof goggles, gloves, and good ventilation. Wash hands thoroughly with soap and water prior to eating, drinking, or smoking.

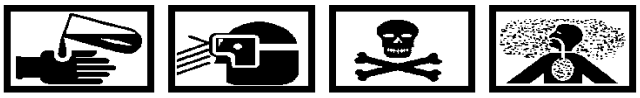

Electronic Solder QQ–S–571 53

Electronic Solder QQ–S–571, contains lead and can be the source of lead oxide that can rub off onto a person's hand from a soldered joint. Lead oxide is a poison that is not thrown off by the body and can therefore accumulate over years. Wash hands with soap and water after use and before eating, drinking or smoking. When soldering the work area should be well ventilated such that the vapors from the rosin are not inhaled. Rosin will irritate the eyes and respiratory track. Rosin is an allergen and may cause rashes and headaches or throat irritation in sensitive persons.

Compound, Anti–seize, High Temperature Lubricating Grease MIL–L–15719 54

Compound, Anti–seize, High Temperature Lubricating Grease MIL–L–15719, is toxic and when heated can emit harmful fumes. Avoid contact with skin, eyes and clothing. Wash hands with soap and water after use.

Penetrating Oil VV–P–216 55

Penetrating Oil VV–P–216, is flammable, toxic and an irritant. Avoid breathing vapor or mist. Avoid contact with skin and eyes. Eye contact: Flush with cold water; get medical attention. Skin contact: Wash with soap and water. Inhalation: Remove to fresh air; get medical attention. Ingestion: Do not induce vomiting; get medical attention. Wash hands with soap and water after use and before eating, drinking or smoking.

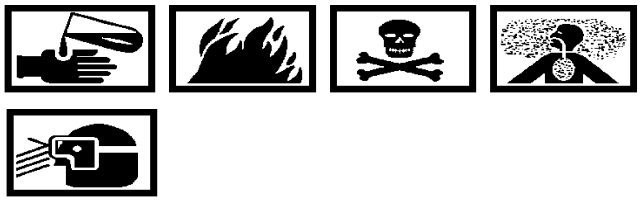

Molybdenum Disulfide Lubricating Oil DOD-L-25681 **57**

Molybdenum Disulfide Lubricating Oil MIL-L-25681, is somewhat flammable, toxic and an irritant. Keep away from heat, sparks and open flames. Use in well-ventilated area. Eye contact: Flush with water; get medical attention. Skin contact: Wash with soap and water. Ingestion: Do not induce vomiting; get medical attention. Wash hands with soap and water after use and before eating, drinking or smoking.

Compressed Air **58**

Compressed Air is used for any cleaning or drying operation. Do not exceed 30 psig at the nozzle. Eyes can be permanently damaged by contact with liquid or large particles propelled by compressed air. Inhalation of air blown particles or solvent vapor can damage lungs. When using air for drying or cleaning at an air-exhausted workbench, wear approved goggles or face shield. When using air for drying or cleaning at an unexhausted workbench, wear approved respirator and goggles.

Dry Ice, BB-C-104 **59**

Dry Ice, BB-C-104, Carbon Dioxide (solid), can cause severe skin burns and frostbite. Do not handle with bare hands. Use in well-ventilated area. Wear cryogenic gloves, chemical goggles and face shield.

Sealing Compound, MIL-PRF-81733 **60**

Sealing Compound MIL-PRF-81733, is toxic and flammable. May cause skin and eye irritation/sensitization. Avoid contact with skin, eyes, and clothes. Avoid inhaling vapors. Contains chromium compounds which may cause cancer. Keep containers closed and away from heat, sparks, flames, and oxidizing materials. Protection: Chemical splashproof goggles, gloves, and good ventilation. Use of respiratory protection may be required. Insure good personal hygiene prior to eating, drinking, or smoking.

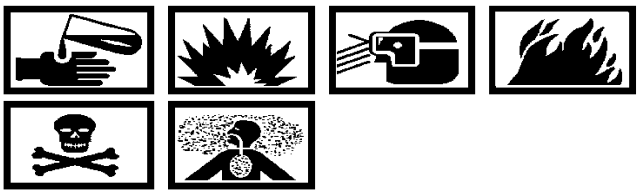

Primer Coating, Epoxy, Waterborne MIL-PRF-85582 **61**

Primer Coating MIL-PRF-85582, is toxic and flammable. Prevent prolonged or repeated breathing of vapors or spray mist. May cause allergic reaction. Avoid contact with skin and eyes. Store tightly closed in a cool, dry, well ventilated area. Launder contaminated clothing before re-use. Protection: full face-piece, forced-air respirator; neoprene gloves; chemical goggles; faceshield; and protective skin compound. Protective clothing is required during spray operations.

INTERMEDIATE MAINTENANCE

ALPHABETICAL INDEX

Title	WP Number Maintenance Allocation 1st	2nd	3rd
Accessory Drive Housing Cover, Gears, Seals, Plugs and Scavenge Pressure Relief Valve Disassembly			
Accessory Drive Housing Cover Removal	042 00	042 00	
Accessory Drive Side Shaftgear Removal	042 00	042 00	
Accessory Idler Gear Removal	042 00	042 00	
Center Accessory Drive and Main Drive Shaft Gear Removal	042 00	042 00	
Disassembly	042 00	042 00	
General	042 00	042 00	
Oil Seal Removal	042 00	042 00	042 00
Side Accessory Drive and Fuel Pump Drive Shaftgear Removal	042 00	042 00	
Tachometer Drive Gear Removal	042 00	042 00	
Accessory Drive Housing Cover, Gears, Seals, Plugs and Scavenge Pressure Relief Valve Assembly			
Accessory Center Drive Gear and Main Drive Shaftgear	044 00	044 00	
Accessory Drive Side Shaftgear Installation	044 00	044 00	
Accessory Drive Housing Cover Installation	044 00	044 00	044 00
Accessory Idler Gear Installation	044 00	044 00	
Accessory Main Drive Shaftgear Installation	044 00	044 00	
Plugs and Valve	044 00	044 00	044 00
Seals Installation	044 00	044 00	
Seals, Plugs, Relief Valve Installation	044 00	044 00	
Side Accessory Drive and Fuel Pump Drive Shaftgear Installation	044 00	044 00	
Speed Sensitive Control Drive Shaft Oil Seal Installation	044 00	044 00	
Tachometer Drive Gear Installation	044 00	044 00	
Accessory Drive Housing Parts, Cleaning, Inspection and Repair			
Cleaning	043 00	043 00	

Title	WP Number Maintenance Allocation 1st	2nd	3rd
Inspection	043 00	043 00	
Repair	043 00	043 00	
Accessory Drive Housing Assembly Removal and Installation			
Installation	029 00	029 00	
Removal	029 00	029 00	
Compressor Bleed Air Valve Assembly Maintenance			
Cleaning	089 00	089 00	089 00
Inspection	089 00	089 00	089 00
Installation	089 00	089 00	089 00
Removal	089 00	089 00	089 00
Repair	089 00	089 00	089 00
Air System Description and Principles of Operation			
Air System Operation and Description	009 00	009 00	009 00
Anti–Icing System	009 00	009 00	009 00
Compressor 5th and 10th Stage Bleed System	009 00	009 00	009 00
Engine Air Flow	009 00	009 00	009 00
Anti–icing Solenoid Valve Assembly Maintenance			
Cleaning	091 00	091 00	091 00
Inspection	091 00	091 00	091 00
Installation	091 00	091 00	091 00
Removal	091 00	091 00	091 00
Repair	091 00	091 00	091 00
Anti–icing Air Tubes Assembly Maintenance			
Cleaning	093 00	093 00	093 00
Inspection	093 00	093 00	093 00
Installation	093 00	093 00	093 00
Removal	093 00	093 00	093 00
Repair	093 00	093 00	093 00
Anti–icing Air Valve Assembly Removal and Installation			
Assembly	092 00	092 00	092 00
Cleaning	092 00	092 00	092 00
Disassembly	092 00	092 00	092 00
Inspection	092 00	092 00	092 00
Installation	092 00	092 00	092 00
Removal	092 00	092 00	092 00

Title	WP Number Maintenance Allocation 1st	2nd	3rd
Repair	092 00	092 00	092 00
Burner Drain Valve Assembly Maintenance			
Cleaning	068 00	068 00	068 00
Inspection	068 00	068 00	068 00
Installation	068 00	068 00	068 00
Removal	068 00	068 00	068 00
Repair	068 00	068 00	068 00
Compressor Bleed Air Filter Assembly Maintenance			
Assembly	090 00	090 00	090 00
Cleaning	090 00	090 00	090 00
Disassembly	090 00	090 00	090 00
Inspection	090 00	090 00	090 00
Installation	090 00	090 00	090 00
Removal	090 00	090 00	090 00
Repair	090 00	090 00	090 00
Combustion Chamber Outer Casing Assembly Cleaning, Inspection and Repair			
Cleaning	050 00	050 00	
Inspection	050 00	050 00	
Repair	050 00	050 00	
Combustion Chamber Outer Casing Assembly, Combustion Liners and Turbine Coupling Shaft Removal and Installation			
Combustion Chamber Outer Casing Installation	031 00	031 00	
Combustion Chamber Outer Casing Removal	031 00	031 00	
Combustion Liners Installation	031 00	031 00	
Combustion Liners Removal	031 00	031 00	
Turbine Coupling Shaft Installation	031 00	031 00	
Turbine Coupling Shaft Removal From Compressor Coupling	031 00	031 00	
Combustion Liners, Liner Supports and Crossover Tubes, Cleaning, Inspection and Repair			
Combustion Liner Assemblies	051 00	051 00	
Combustion Liner Crossover Tubes	051 00	051 00	
Combustion Liner Supports	051 00	051 00	
Compressor Assembly – Assembly			
Air Inlet Housing	049 00	049 00	
Anti–icing Air Distribution Tube Installation	049 00	049 00	
Checking Rotor to Vane Axial Clearance	049 00		

Title	WP Number Maintenance Allocation 1st	2nd	3rd
Compressor Casing Installation	049 00	049 00	
Compressor Coupling Shaft Installation	049 00		
Compressor Rotor Rear Bearing and Seal Installation	049 00	049 00	
Cyclone Breather Installation	049 00	049 00	
Extension Shaft Assembly	049 00		
Extension Shaft Backlash Check	049 00	049 00	
Extension Shaft Installation	049 00	049 00	
External Components Installation	049 00	049 00	
Front Outer Race and Roller Installation	049 00		
Fuel Nozzle Installation	049 00	049 00	049 00
General	049 00	049 00	049 00
Inlet Housing Strut Fittings Installation	049 00	049 00	049 00
Inlet Vane Assembly Into the Air Inlet Housing Installation	049 00	049 00	
Installation of Attachments to the Inlet Housing	049 00	049 00	
Installing Rotor Into Diffuser	049 00		
Installing the Front Seals on the Rotor	049 00	049 00	
Reassembly of the Compressor Case	049 00		
Shim Calculation	049 00		
Side Gear Bearings Installation	049 00		
Torquing the Rear Bearing Retaining Nut	049 00	049 00	
Total Compressor Rotor Axial Clearance Checks	049 00		
Compressor Blades and Vanes Inspection and Repair			
Compressor Case Assembly Measurements	045 00	045 00	
Compressor Case Pilot Diameter Measurements	045 00	045 00	
Compressor Rotor Blades Rework	045 00	045 00	045 00
Compressor Stator Vane Inspection	045 00	045 00	
Compressor Vane Assembly Inspection and Rework	045 00	045 00	
Compressor Diffuser, Rear Bearing and Seal Maintenance			
Compressor Rear Bearing and Seal Inspection	046 00	046 00	
Compressor Rear Bearing Locking Key	046 00	046 00	
Compressor Rear Bearing Oil Jet	046 00	046 00	
Compressor Shaft Coupling	046 00	046 00	
Diffuser Assembly Inspection and Repair	046 00	046 00	
Compressor Assembly – Disassembly			
Compressor Extension Shaft and Housing Removal	047 00	047 00	

Title	WP Number Maintenance Allocation 1st	2nd	3rd
Compressor Front Bearing and Seal Removal	047 00	047 00	
Compressor Casing Removal	047 00	047 00	
Compressor Rotor Removal	047 00		
Disassembly	047 00		
Remove External Components	047 00	047 00	
Compressor Air Inlet Housing, Compressor Case, Compressor Rotor and Diffuser Assemblies Cleaning, Inspection and Repair			
Air Inlet Housing Inspection and Repair	048 00		
Air Inlet Housing Surface Treatment	048 00		
Bearing Servicing	048 00		
Compressor Air Bleed Collectors	048 00		
Compressor Air Inlet Vane Assembly Inspection	048 00		
Compressor Blades and Vanes: Inspection and Repair	048 00		
Compressor Case Inspection and Rework	048 00		
Compressor Case Cleaning	048 00		
Compressor Extension Shaft Bearing Retaining Ring Inspection	048 00		
Compressor Extension Shaft Housing Inspection	048 00		
Compressor Front and Rear Bearing Locking Keys Inspection	048 00		
Compressor Front Bearing Oil Seal Inspection	048 00		
Compressor Outlet Vane Inspection	048 00		
Compressor Rear Bearing and Seal Inspection	048 00		
Compressor Rear Bearing Oil Jet Inspection	048 00		
Compressor Rotor Assembly Cleaning	048 00		
Compressor Shaft Coupling Inspection	048 00		
Compressor Vane Seals	048 00		
Diffuser Cleaning	048 00		
Diffuser Inspection and Repair	048 00		
General	048 00		
Rotor Interstage Seals	048 00		
Control Linkage Rod Ends Maintenance			
Cleaning	069 00	069 00	069 00
Inspection	069 00	069 00	069 00
Repair	069 00	069 00	069 00
Coordinator Control Assembly Maintenance			
Cleaning	065 00	065 00	065 00

Title	WP Number Maintenance Allocation 1st	2nd	3rd
Coordinator to Fuel Control Rigging	065 00	065 00	065 00
Inspection	065 00	065 00	065 00
Installation	065 00	065 00	065 00
Lever Installation	065 00	065 00	065 00
Removal	065 00	065 00	065 00
Repair	065 00	065 00	065 00
Dual Element Fuel Pump Assembly Maintenance			
Cleaning	058 00	058 00	058 00
Inspection	058 00	058 00	058 00
Installation	058 00	058 00	058 00
Removal	058 00	058 00	058 00
Repair	058 00	058 00	058 00
Electrical System Description and Principles of Operation			
Electrical System Schematic	008 00	008 00	008 00
Engine Monitoring System	008 00	008 00	008 00
Ignition System	008 00	008 00	008 00
Power Section Harness	008 00	008 00	008 00
Thermocouples and Thermocouple Harness	008 00	008 00	008 00
Engine Description and Principles of Operation			
Accessories Drive Assembly	005 00	005 00	005 00
Combustion Section	005 00	005 00	005 00
Compressor	005 00	005 00	005 00
Engine Specifications	005 00	005 00	005 00
General	005 00	005 00	005 00
Interconnecting Structure Description	005 00	005 00	005 00
Orientation	005 00	005 00	005 00
Power Section Description	005 00	005 00	005 00
Principles of Operation	005 00	005 00	005 00
Propeller Brake	005 00	005 00	005 00
Reduction Gearbox Assembly	005 00	005 00	005 00
Safety Coupling	005 00	005 00	005 00
Tie Struts	005 00	005 00	005 00
Torquemeter Assembly	005 00	005 00	005 00
Turbine Assembly	005 00	005 00	005 00
Engine Monitoring System Components Maintenance			

Title	WP Number Maintenance Allocation 1st	2nd	3rd
Compensated Turbine Measured Temperature (CTMT) Components Checkout	094 00	094 00	094 00
Compressor Discharge Pressure (CDP) Components	094 00	094 00	094 00
Combination Total Temperature –Pressure Sensor Installation and Removal	094 00	094 00	094 00
Compressor Discharge Temperature (CDT) Components Checkout	094 00	094 00	094 00
Compressor Inlet Pressure (CIP) Components Checkout	094 00	094 00	094 00
Compressor Inlet Temperature (CIT) Components Checkout	094 00	094 00	094 00
Engine Monitoring System (EMS) Checkout	094 00	094 00	094 00
Power Lever Angle (PLA) Components Checkout	094 00	094 00	094 00
RPM Components Checkout	094 00	094 00	094 00
Shaft Horsepower (SHP) Components Checkout	094 00	094 00	094 00
Turbine Exhaust Pressure (PS7) Components Checkout	094 00	094 00	094 00
Vibration Components Checkout	094 00	094 00	094 00
Digital Electronic Trim Control (DETC) Checkout	094 00	094 00	094 00
Engine Analyzer Unit (EAU) Checkout	094 00	094 00	094 00
Handheld Maintenance Terminal (HMT) Checkout	094 00	094 00	094 00
Pilot Record Switch	094 00	094 00	094 00
Warning Lamps	094 00	094 00	094 00
Weight On Wheels Switch	094 00	094 00	094 00
Engine Monitoring System (EMS) Description and Principles of Operation			
Digital Electronic Trim Control (DETC)	010 00	010 00	010 00
Engine Analyzer Unit (EAU)	010 00	010 00	010 00
Engine Hardware	010 00	010 00	010 00
Engine Monitoring System (EMS)	010 00	010 00	010 00
Ground Station	010 00	010 00	010 00
Handheld Maintenance Terminal (HMT)	010 00	010 00	010 00
Tape Transport Cartridge (TTC)	010 00	010 00	010 00
Test Cell Warning Lights	010 00	010 00	010 00
Total Temperature/Pressure Sensor Assembly (CDT/CDP Probe)	010 00	010 00	010 00
Vibration (GVIB, CVIB, TVIB) Sensor	010 00	010 00	010 00
Weight on Wheels (WOW) Switch	010 00	010 00	010 00
Engine Test Preparation			
Digital Electronic Control Calibration	022 00	022 00	
Duel Element Fire Warning System (DEFWS) Check Out	022 00	022 00	

Title	WP Number Maintenance Allocation 1st	2nd	3rd
Engine Analyzer Unit Set Up	022 00	022 00	
Engine Installation	022 00	022 00	
Prestart Checks and Adjustments	022 00	022 00	
Propeller Control Linkage Check	022 00	022 00	
Test Equipment Installation	022 00	022 00	
Torquemeter Runout Test Set Hookup	022 00	022 00	
Turboprop Engine Test System	022 00	022 00	
Engine Test Procedures and Requirements			
Auto Feather (Light) Check	023 00	023 00	
Before Start	023 00	023 00	
Borescope Inspection of Compressor Blades	023 00	023 00	023 00
Borescope Inspection of Turbine First Stage Vanes and Blades	023 00	023 00	023 00
Compressor and Turbine Seal Break–in	023 00	023 00	
Compressor Rotor Blade to Compressor Case Rub	023 00	023 00	
Digital Electronic Control (DEC) Check	023 00	023 00	
Digital Electronic Control (DEC) Torque Calibration	023 00	023 00	
Emergency Shutdown	023 00	023 00	
Engine Monitoring System (EMS) Functional Check	023 00	023 00	
Engine Monitoring System (EMS) Tape Analysis	023 00	023 00	
Engine Performance Calculators	023 00	023 00	
Engine Shutdown Procedures	023 00	023 00	
Engine Start Procedures	023 00	023 00	
Engine Starting	023 00	023 00	
Engine Testing	023 00	023 00	
Final Control Check	023 00	023 00	
Fuel Control Governor Check	023 00	023 00	
Inspection After Test	023 00	023 00	
Magnetic Plugs	023 00	023 00	
Marconi Horsepower Indicator Calibration	023 00	023 00	
Matching Horsepower Indicator to Engine	023 00	023 00	
Mechanical Fuel Shutoff Check	023 00	023 00	
Minimum Power Calculation	023 00	023 00	
Normal Shutdown	023 00	023 00	
Operation Without Propeller	023 00	023 00	
Penalty Check Run of Engine	023 00	023 00	

Title	WP Number Maintenance Allocation 1st	2nd	3rd
Power Section Oil Pressure Adjustment	023 00	023 00	
QEC Storage After Engine Test	023 00	023 00	
Reduction Gear Assembly (RGA) Run–In procedure	023 00	023 00	
Reduction Gear Oil Pressure Adjustment	023 00	023 00	
Reverse Thrust Operational Check	023 00	023 00	
Seal Break–in Run	023 00	023 00	
Shutdown and Negative Torque System Check	023 00	023 00	
Speed Control	023 00	023 00	
Test Limits	023 00	023 00	
Test Log Sheet Requirements	023 00	023 00	
Test Requirements	023 00	023 00	
Test Stand Operating Precautions	023 00	023 00	
Torquemeter Runout Test	023 00	023 00	
Torquemeter Runout Check	023 00	023 00	
Torquemeter Runout Test Set Calibration	023 00	023 00	
Fuel and Air Hoses and Metal Tubing Maintenance			
Air Hose Servicing	057 00	057 00	057 00
Fuel Hose Servicing	057 00	057 00	057 00
Metal Tubing Servicing	057 00	057 00	057 00
Fuel System and Control System Description and Principles of Operation			
Combustion Chamber Drain Valves	006 00	006 00	006 00
Compressor Inlet Pressure Measurement	006 00	006 00	006 00
Compressor Inlet Temperature Measurement	006 00	006 00	006 00
Control System Operation	006 00	006 00	006 00
Coordinator	006 00	006 00	006 00
Digital Electronic Trim Control	006 00	006 00	006 00
Engine Advisory/Caution Annunciation	006 00	006 00	006 00
Exhaust Pressure Measurement	006 00	006 00	006 00
Fuel Control	006 00	006 00	006 00
Fuel Pump	006 00	006 00	006 00
Fuel System	006 00	006 00	006 00
Fuel Trim Valve	006 00	006 00	006 00
Low Pressure Fuel Filter Assemblies	006 00	006 00	006 00
High Pressure Fuel Filter Assemblies	006 00	006 00	006 00
Power Lever and Condition Lever	006 00	006 00	006 00

Title	WP Number Maintenance Allocation 1st	2nd	3rd
Power Lever Rate Servo	006 00	006 00	006 00
Propeller Control Linkage	006 00	006 00	006 00
Speed Sensitive Valve	006 00	006 00	006 00
Starting Fuel Enrichment System	006 00	006 00	006 00
Torque and Speed Measurement System	006 00	006 00	006 00
Turbine Temperature Measurement System	006 00	006 00	006 00
Fuel Control Assembly Maintenance			
Cleaning	064 00	064 00	064 00
Coordinator–to–Fuel Control Rigging	064 00	064 00	064 00
Fuel Control Shutoff Valve Solenoid Assembly	064 00	064 00	064 00
Installation	064 00	064 00	064 00
Inspection	064 00	064 00	064 00
Removal	064 00	064 00	064 00
Repair	064 00	064 00	064 00
Fuel Filter Differential Pressure Indicator Maintenance			
Cleaning	062 00	062 00	062 00
Inspection	062 00	062 00	062 00
Installation	062 00	062 00	062 00
Removal	062 00	062 00	062 00
Repair	062 00	062 00	062 00
Fuel Nozzle Assemblies Maintenance			
Cleaning	067 00	067 00	067 00
Inspection	067 00	067 00	067 00
Installation	067 00	067 00	067 00
Removal	067 00	067 00	067 00
Repair	067 00	067 00	067 00
Fuel Nozzle Inspection Procedures and Requirements			
Fuel Nozzle Inspection	024 00	024 00	024 00
High Pressure Fuel Pump Filter Maintenance			
Assembly	059 00	059 00	059 00
Cleaning	059 00	059 00	059 00
Disassembly	059 00	059 00	059 00
Inspection	059 00	059 00	059 00
Installation	059 00	059 00	059 00
Removal	059 00	059 00	059 00

Title	WP Number Maintenance Allocation 1st	2nd	3rd
Repair	059 00	059 00	059 00
Ignition Exciter Assembly Maintenance			
Cleaning	082 00	082 00	082 00
Inspection	082 00	082 00	082 00
Installation	082 00	082 00	082 00
Removal	082 00	082 00	082 00
Repair	082 00	082 00	082 00
Ignition Relay Maintenance			
Cleaning	084 00	084 00	084 00
Inspection	084 00	084 00	084 00
Installation	084 00	084 00	084 00
Removal	084 00	084 00	084 00
Repair	084 00	084 00	084 00
Inner Rear Exhaust Cone Assembly, Rear Thermal Insulation Blanket, (Rear) Scavenge Oil Pump Assembly and Turbine Scavenge Oil Pump Support Assembly Maintenance			
Cleaning	056 00	056 00	
Inspection	056 00	056 00	
Installation	056 00	056 00	
Removal	056 00	056 00	
Installation of Engine Assembly onto a Maintenance Trailer or Stand Maintenance			
Engine Installation in Overhaul Stand	021 00	021 00	021 00
Engine (with QEC) Installation on ALC 4000A Trailer	021 00	021 00	021 00
Engine Maintenance on Parallel Rail Work Stand	021 00	021 00	021 00
Low Pressure Fuel Filters and Elements Maintenance			
Assembly	061 00	061 00	061 00
Cleaning	061 00	061 00	061 00
Disassembly	061 00	061 00	061 00
Inspection	061 00	061 00	061 00
Installation	061 00	061 00	061 00
Removal	061 00	061 00	061 00
Repair	061 00	061 00	061 00
Oil Seal Plug Replacement			
Alternator Drive Shaft Oil Seal Plug Replacement	017 00	017 00	
Hydraulic Pump and Generator Drive Shaft Oil Seal Plug	017 00	017 00	

Title	WP Number Maintenance Allocation 1st	2nd	3rd
Hydraulic Pump idler Drive Shaftgear Oil Seal Plug	017 00	017 00	
Introduction	017 00	017 00	
Oil Seal Plug	017 00	017 00	
Side Accessory Drive Shaft Oil Seal Plug	017 00	017 00	
Tachometer Drive Gear Oil Seal Plug	017 00	017 00	
Tachometer Drive Shaft Oil Seal Plug	017 00	017 00	
Oil System Description and Principles of Operation			
Introduction	007 00	007 00	007 00
Power Section Oil System Description	007 00	007 00	007 00
Power Section Oil System Principles of Operation	007 00	007 00	007 00
Reduction Gear Oil System Description	007 00	007 00	007 00
Reduction Gear Oil System Principles of Operation	007 00	007 00	007 00
Paralleling Valve Maintenance			
Cleaning	060 00	060 00	060 00
Inspection	060 00	060 00	060 00
Installation	060 00	060 00	060 00
Removal	060 00	060 00	060 00
Repair	060 00	060 00	060 00
Power Section External Scavenge Oil Pump Assembly Maintenance			
Cleaning	078 00	078 00	078 00
Inspection	078 00	078 00	078 00
Installation	078 00	078 00	078 00
Removal	078 00	078 00	078 00
Repair	078 00	078 00	078 00
Power Section Main Pressure and Scavenge Oil Pump Maintenance			
Cleaning	075 00	075 00	075 00
Inspection	075 00	075 00	075 00
Installation	075 00	075 00	075 00
Removal	075 00	075 00	075 00
Repair	075 00	075 00	075 00
Power Section Magnetic Plug Maintenance			
Cleaning	073 00	073 00	073 00
Inspection	073 00	073 00	073 00
Installation	073 00	073 00	073 00
Removal	073 00	073 00	073 00

Title	WP Number Maintenance Allocation 1st	2nd	3rd
Repair	073 00	073 00	073 00
Power Section Oil Filter Maintenance			
Assembly	077 00	077 00	077 00
Disassembly	077 00	077 00	077 00
Inspection	077 00	077 00	077 00
Installation	077 00	077 00	077 00
Removal	077 00	077 00	077 00
Power Section Pressure Regulating Valve Maintenance			
Cleaning	076 00	076 00	076 00
Inspection	076 00	076 00	076 00
Installation	076 00	076 00	076 00
Removal	076 00	076 00	076 00
Repair	076 00	076 00	076 00
Power Section Wiring Harness Removal and Installation			
Installation, Right and Left Side	081 00	081 00	081 00
Installation, Inter–Connecting	081 00	081 00	081 00
Removal, Right and Left Side	081 00	081 00	081 00
Removal, Inter–Connecting	081 00	081 00	081 00
Pre–Induction Inspection	020 00	020 00	020 00
Preparation for Service and Storage			
Depreservation and Initial Run	019 00	019 00	
Digital Electronic Trim Control Installation into Shipping Container	019 00	019 00	019 00
Engine Corrosion Protection	019 00	019 00	019 00
General	019 00	019 00	019 00
Maintenance in Preservation	019 00	019 00	019 00
Pre–Induction Inspection	019 00	019 00	019 00
Power Section Removal from and Installation in Shipping Container	019 00	019 00	019 00
Preservation of Inoperable Engines	019 00	019 00	019 00
Preservation of Operable Engines	019 00	019 00	019 00
Reduction Gear Removal from and Installation in Shipping Container	019 00	019 00	019 00
Shipping Containers	019 00	019 00	019 00
Temperature Datum Control Installation Into Shipping Container	019 00	019 00	019 00
Torquemeter Removal from and Installation in Shipping Container	019 00	019 00	019 00
Pressure Switch Maintenance			

Title	WP Number		
	Maintenance Allocation		
	1st	2nd	3rd
Cleaning	063 00	063 00	063 00
Inspection	063 00	063 00	063 00
Installation	063 00	063 00	063 00
Removal	063 00	063 00	063 00
Repair	063 00	063 00	063 00
Propeller Shaft Oil Seal and Nose Bearing Thrust Plate Removal and Installation			
Oil Seal Installation	034 00	034 00	034 00
Oil Seal Removal	034 00	034 00	034 00
Propeller Shaft Plug Removal and Installation			
Installation	035 00	035 00	035 00
Removal	035 00	035 00	035 00
Reduction Gear Unit Assembly			
Alternator Drive Gear Assembly Installation	040 00	040 00	
Front Housing Outer Component Installation	040 00	040 00	
Front Scavenge Oil Pumps Assembly	040 00	040 00	
General	040 00	040 00	
Generator Shaft and Hydraulic Pump Drive Gear Installation	040 00	040 00	
Handling Heated and Super–Chilled (Frozen) Parts	040 00	040 00	
Hydraulic Pump Idler Gear Installation	040 00	040 00	
Hydraulic Pump Drive Idler Gear Installation	040 00	040 00	
Hydraulic Pump Drive Gear Assembly Installation	040 00	040 00	
Main Diaphragm Assembly	040 00	040 00	
Main Drive Gear and Sun Gear Installation	040 00	040 00	
Oil Pump Idler Gear Installation	040 00	040 00	
Oil Pump Drive Gears Installation	040 00	040 00	
Pinion Gear Installation	040 00	040 00	
Propeller Brake and Inner Diaphragm Installation	040 00	040 00	
Propeller Control Linkage Installation	040 00	040 00	
Propeller Shaft Installation	040 00		
Rear Carrier Bearing Inner Ring Installation	040 00	040 00	
Rear Housing Installation	040 00	040 00	
Rear Housing Outer Components Installation	040 00	040 00	
Reduction Gear Front Housing Assembly	040 00	040 00	
Reduction Gear Plugs	040 00	040 00	
Reduction Gear Stands	040 00	040 00	

Title	WP Number Maintenance Allocation 1st	2nd	3rd
Reduction Gear Strut Installation	040 00	040 00	
Reduction Gear Transportation or Storage	040 00	040 00	
Spanner Nut Face Lapping and Cup Washer Installation	040 00	040 00	
Tachometer Drive Gears Installation	040 00	040 00	
Tachometer Drive Idler Gear Installation	040 00	040 00	
Torquemeter Unit Installation	040 00	040 00	
Reduction Gear Unit Disassembly			
Alternator Drive Gear Assembly	038 00	038 00	
Generator Drive Shaft and Hydraulic Pump Drive Gear Removal	038 00	038 00	
Hydraulic Pump Drive Idler Gear Removal	038 00	038 00	
Hydraulic Pump Drive Shaft, Drive Gear and Tachometer Drive Take–off Gear Removal	038 00	038 00	
Hydraulic Pump Idler Gear Removal	038 00	038 00	
Installation of Reduction Gear Unit in Turnover Stand	038 00	038 00	
Introduction	038 00	038 00	
Loosening of Accessory Drive Spanner Nuts and Removal of Bearing Inner Diaphragm in Rear Housing	038 00	038 00	
Main Diaphragm Removal and Disassembly	038 00	038 00	
Main Drive and Sun Gears Removal	038 00	038 00	
Main Idler Gear Removal	038 00	038 00	
Oil Pump Drive Idler Journal and Pump Drive Idler Gear Removal	038 00	038 00	
Oil Pump Drive Shaft, and Oil Pump Drive Gear Removal	038 00	038 00	
Oil Seals Removal	038 00	038 00	
Parallel Rail Stand	038 00	038 00	
Pinion Gear Removal	038 00	038 00	
Propeller Brake and Starter Gear Removal	038 00	038 00	
Propeller Shaft and Planetary Gears Removal	038 00		
Propeller Shaft Thrust Bearing Nut Removal	038 00	038 00	
Rear Housing Removal	038 00	038 00	
Reduction Gear External Equipment Removal	038 00	038 00	
Reduction Gear Scavenge Oil Pumps Disassembly	038 00	038 00	
Struts and Eyebolts Removal	038 00	038 00	
Tachometer Drive Idler Gear Removal	038 00	038 00	
Tachometer Drive Shaft and Tachometer Drive Gears Removal	038 00	038 00	
Torquemeter Unit Removal	038 00	038 00	
Reduction Gear Drain Plug Inserts Maintenance			

Title	WP Number Maintenance Allocation 1st	2nd	3rd
Reduction Gear Drain Plug Inserts Replacement	032 00	032 00	
Reduction Gear External Oil Pressure Relief Valve Assembly Maintenance			
Assembly	074 00	074 00	074 00
Cleaning	074 00	074 00	074 00
Disassembly	074 00	074 00	074 00
Inspection	074 00	074 00	074 00
Installation	074 00	074 00	074 00
Removal	074 00	074 00	074 00
Repair	074 00	074 00	074 00
Reduction Gear Magnetic Plug and Scavenge Oil Screen Assembly Maintenance			
Cleaning	072 00	072 00	072 00
Inspection	072 00	072 00	072 00
Installation	072 00	072 00	072 00
Removal	072 00	072 00	072 00
Repair	072 00	072 00	072 00
Reduction Gear Oil Filter Assembly Maintenance			
Assembly	071 00	071 00	071 00
Disassembly	071 00	071 00	071 00
Inspection	071 00	071 00	071 00
Installation	071 00	071 00	071 00
Removal	071 00	071 00	071 00
Reduction Gear Oil Pump Assembly Maintenance			
Assembly	070 00	070 00	070 00
Cleaning	070 00	070 00	070 00
Disassembly	070 00	070 00	070 00
Inspection	070 00	070 00	070 00
Installation	070 00	070 00	070 00
Removal	070 00	070 00	070 00
Repair	070 00	070 00	070 00
Replacement	070 00	070 00	070 00
Reduction Gear Unit Parts Cleaning, Inspection, Repair and Replacement			
Accessory Drive Shafts Internal Spline Inspection	039 00	039 00	
Bearings	039 00	039 00	
Bearing Cleaning	039 00	039 00	

Title	WP Number Maintenance Allocation 1st	2nd	3rd
Bearing Inspection	039 00	039 00	
Bearing Removal and Disassembly	039 00	039 00	
Cleaning	039 00	039 00	
Eyebolt Inspection	039 00	039 00	
General	039 00	039 00	
Inspection	039 00	039 00	
Pinion Gear and Main Drive Gear Inspection	039 00	039 00	
Propeller Shaft Cleaning and Inspection	039 00		
Propeller Shaft Threads Inspection and Repair	039 00	039 00	039 00
Propeller Shaft End Play Check	039 00	039 00	039 00
Rear Carrier Bearing Spanner Nut Lockpin Retaining Ring Inspection	039 00	039 00	
Reduction Gear Eyebolts	039 00	039 00	
Reduction Gear Eyebolt Pins	039 00	039 00	
Reduction Gear Inner and Main Diaphragm Inspection	039 00	039 00	
Reduction Gear Inspection Following Sudden Engine Stop by Propeller Object Strike	039 00	039 00	
Reduction Gear Oil Tubes Inspection	039 00	039 00	
Reduction Gear Propeller Brake Inspection	039 00	039 00	
Reduction Gear Rear Case to Inner Diaphragm Bore Alignment Check	039 00	039 00	
Reduction Gear Rear Housing Inspection	039 00	039 00	
Reduction Gear Small Gears and Gear Shafts	039 00	039 00	
Reduction Gear Struts	039 00	039 00	039 00
Reduction Gear Strut Clevis Bolts	039 00	039 00	039 00
Simplex Seals	039 00	039 00	
Starter Pad Cavity Inspection and Rework	039 00	039 00	
Reduction Gear Housing Plugs and Pressure Relief Valve Maintenance			
Cleaning	037 00	037 00	037 00
Inspection	037 00	037 00	037 00
Installation	037 00	037 00	037 00
Removal	037 00	037 00	037 00
Repair	037 00	037 00	037 00
Reduction Gear Prop Feather Solenoid Maintenance			
Cleaning	079 00	079 00	079 00
Inspection	079 00	079 00	079 00
Installation	079 00	079 00	079 00

Title	WP Number Maintenance Allocation 1st	2nd	3rd
Removal	079 00	079 00	079 00
Repair	079 00	079 00	079 00
Reduction Gear Rear Housing Oil Seals Replacement			
Rear Housing Oil Seals Replacement	033 00	033 00	033 00
Reduction Gear Unit Assembly with Safety Coupling Assembly and Torquemeter Unit Removal and Installation			
Installation	027 00	027 00	027 00
Introduction	027 00	027 00	027 000
Propeller Control Linkage Adjustment Procedures (Hamilton Standard 59460 Propeller)	027 00	027 00	027 00
Propeller Control Linkage Installation	027 00	027 00	027 00
Removal	027 00	027 00	027 00
Solenoid–Manifold Drain Valve Assembly Maintenance			
Cleaning	066 00	066 00	066 00
Inspection	066 00	066 00	066 00
Installation	066 00	066 00	066 00
Removal	066 00	066 00	066 00
Repair	066 00	066 00	066 00
Spark Igniters Maintenance			
Cleaning	085 00	085 00	085 00
Inspection	085 00	085 00	085 00
Installation	085 00	085 00	085 00
Removal	085 00	085 00	085 00
Repair	085 00	085 00	085 00
Spark Igniter Leads (LH and RH) Maintenance			
Cleaning	086 00	086 00	086 00
Inspection	086 00	086 00	086 00
Installation	086 00	086 00	086 00
Removal	086 00	086 00	086 00
Repair	086 00	086 00	086 00
Speed Sensitive Valve Assembly Maintenance			
Assembly	088 00	088 00	088 00
Cleaning	088 00	088 00	088 00
Disassembly	088 00	088 00	088 00
Inspection	088 00	088 00	088 00
Installation	088 00	088 00	088 00

Title	WP Number		
	Maintenance Allocation		
	1st	2nd	3rd
Removal	088 00	088 00	088 00
Repair	088 00	088 00	088 00
Standard Practices, Assembly and Disassembly			
Bearing Definitions	016 00	016 00	016 00
Bearing Handling	016 00	016 00	016 00
Bearings	016 00	016 00	016 00
Cotter Pin Installation	016 00	016 00	016 00
Cup Washers Installation	016 00	016 00	016 00
Engine Fit Limits	016 00	016 00	016 00
General	016 00	016 00	016 00
General on Linkage	016 00	016 00	016 00
Heating Bearings	016 00	016 00	016 00
Lockwire Installation	016 00	016 00	016 00
Tightening Procedures	016 00	016 00	016 00
Standard Practices, Cleaning and Corrosion Treatment			
Aluminum Coated Ferrous Parts	013 00	013 00	013 00
Bearing Cleaning	013 00	013 00	013 00
Cleaning After Disassembly	013 00	013 00	013 00
Corrosion Treatment	013 00	013 00	013 00
Ferrous Parts	013 00	013 00	013 00
Magnesium Gearbox Housings	013 00	013 00	013 00
Non–Ferrous Parts	013 00	013 00	013 00
Standard Practices, Component Marking and Time Coding			
Life Limited Parts	012 00	012 00	
Parts Service Time Coding	012 00	012 00	
Standard Practices, Inspection and Non–Destructive Testing (NDT)			
Bearing Inspection	014 00	014 00	014 00
Fluorescent Penetrant Inspection	014 00	014 00	014 00
General Information	014 00	014 00	014 00
General Inspection Instructions	014 00	014 00	014 00
Non–Destructive Testing	014 00	014 00	014 00
Standard Practices, Repair			
Bushing Replacement	015 00	015 00	015 00
Thread Repair	015 00	015 00	015 00
Standard Practices, Safety Precautions			

Title	WP Number Maintenance Allocation 1st	2nd	3rd
Introduction	011 00	011 00	011 00
Safety Precautions–Hazardous Materials	011 00	011 00	011 00
Support Equipment Maintenance			
Care of Tools	018 00	018 00	018 00
General	018 00	018 00	018 00
Inspection and Testing of Tools	018 00	018 00	018 00
Shipment and Storage of Tools	018 00	018 00	018 00
Thermocouple Assembly Maintenance			
Cleaning	083 00	083 00	083 00
Inspection	083 00	083 00	083 00
Installation	083 00	083 00	083 00
Removal	083 00	083 00	083 00
Repair	083 00	083 00	083 00
Thermocouple Harness, Power Section Maintenance			
Cleaning	087 00	087 00	087 00
Inspection	087 00	087 00	087 00
Installation	087 00	087 00	087 00
Removal	087 00	087 00	087 00
Repair	087 00	087 00	087 00
Thrust Sensitive Switch (TSS) Assembly Maintenance			
Cleaning	080 00	080 00	080 00
Inspection	080 00	080 00	080 00
Installation	080 00	080 00	080 00
Removal	080 00	080 00	080 00
Thrust Sensitive Signal System (TSS) Actuator Removal and Installation			
Installation	036 00	036 00	036 00
Removal	036 00	036 00	036 00
Torquemeter Anti–Icing Cowl Assembly Maintenance			
Cleaning	026 00	026 00	026 00
Inspection	026 00	026 00	026 00
Installation	026 00	026 00	026 00
Removal	026 00	026 00	026 00
Repair	026 00	026 00	026 00
Torquemeter Maintenance			
Cleaning	041 00	041 00	041 00

Title	WP Number Maintenance Allocation 1st	2nd	3rd
Inspection	041 00	041 00	041 00
Installation of Inner Ring	041 00	041 00	041 00
Repair	041 00	041 00	041 00
Torquemeter Mid–bearing Installation	041 00	041 00	
Torquemeter Mid–bearing Removal	041 00	041 00	
Torquemeter Unit and Safety Coupling Assembly Removal and Installation			
Torquemeter Housing Assembly Installation	028 00	028 00	028 00
Torquemeter and Safety Coupling Removal	028 00	028 00	028 00
Torquemeter and Safety Coupling Installation	028 00	028 00	028 00
Troubleshooting and Maintenance			
Abnormally Low TMT	025 00	025 00	025 00
Air Leakage at Compressor Casing Splitline	025 00	025 00	025 00
Compressor Air Inlet Blockage Inspection	025 00	025 00	025 00
Compressor Water Wash Cleaning Procedure	025 00	025 00	025 00
Coordinator Static Check	025 00	025 00	025 00
CTMT Check	025 00	025 00	025 00
Differential Pressure Indicator Actuated on Scavenge Oil Filter	025 00	025 00	025 00
Electrical Components Checkout	025 00	025 00	025 00
EMS Confirms Bogdown	025 00	025 00	025 00
EMS Confirms CTMT Above 875°C	025 00	025 00	025 00
EMS Confirms Flameout	025 00	025 00	025 00
EMS Confirms High Vibration or Vibration Sensor Fault	025 00	025 00	025 00
EMS Confirms ISHP Over 5125	025 00	025 00	025 00
EMS Confirms ISHP Over 6000	025 00	025 00	025 00
EMS Confirms Long Start	025 00	025 00	025 00
EMS Confirms Low Engine Power	025 00	025 00	025 00
EMS Confirms RPM Over 103% or 108% (14,666 or 15,378 RPM)	025 00	025 00	025 00
EMS Confirms Surge Detected	025 00	025 00	025 00
EMS Confirms TMT Above 930°C	025 00	025 00	025 00
Engine Does Not Rotate During Start	025 00	025 00	025 00
Engine Inspection Following Sudden Engine Stop By Propeller Object Strike	025 00	025 00	025 00
Engine Lights–off But Will Not Accelerate to Correct Speed	025 00	025 00	025 00
Engine Overspeeds or EMS Confirms RPM Exceeds 14,524	025 00	025 00	025 00
Engine Overtorque	025 00	025 00	025 00

Title	WP Number Maintenance Allocation 1st	2nd	3rd
Engine Removed For Fumes In Cockpit	025 00	025 00	025 00
Engine Rotates But Fails to Light–off During Start	025 00	025 00	025 00
Engine Unable to Reach Maximum Controlled Speed of 100% RPM (14,239 RPM)	025 00	025 00	025 00
Engine Will Not Shut Down Electrically	025 00	025 00	025 00
Engine/Propeller Operated in Wrong Configuration	025 00	025 00	025 00
Excessive Oil Consumption	025 00	025 00	025 00
Excessive Oil Spewing from Diffuser Vents	025 00	025 00	025 00
Excessive TMT with DETC Switch in CONTROL or LIMIT Positions	025 00	025 00	025 00
Ground Idle Speed Does Not Change When Selected	025 00	025 00	025 00
High Horsepower and High Fuel Flow at Normal TMT	025 00	025 00	025 00
Hunting (RPM Fluctuation)	025 00	025 00	025 00
Ignition System Does Not Shut Off Electrically	025 00	025 00	025 00
Low Horsepower and High Fuel Flow at Normal TMT	025 00	025 00	025 00
Low Horsepower and Low Fuel Flow at Normal TMT	025 00	025 00	025 00
Low Horsepower with DETC Switch in CONTROL Position	025 00	025 00	025 00
Low RPM at Ground Idle and/or Flight Idle	025 00	025 00	025 00
Magnetic Plug Chip Detector Light Comes On	025 00	025 00	025 00
No Vibration Indication or Vibration Indication Too Low	025 00	025 00	025 00
Oil Seal Maintenance	025 00	025 00	025 00
Overspeed Inspection	025 00	025 00	025 00
Power Section Oil Pressure Out of Limits at 100% RPM and at Normal TMT	025 00	025 00	025 00
Power Section or Reduction Gear Unit Filled With Oil (Static Oil Leak–down)	025 00	025 00	025 00
Primary Pump Light Does Not Go On Between 15 and 63% (2200–9000 RPM)	025 00	025 00	025 00
Primary Pump Light Does Not Go Out Above 63% (9000 RPM) During Start	025 00	025 00	025 00
Propeller Fails to Rotate by Hand Prior to Start	025 00	025 00	025 00
Propeller Rotates in Reverse Direction in Flight or on Test Stand	025 00	025 00	025 00
Reduction Gear Unit Flushing Procedure	025 00	025 00	025 00
Reduction Gear Unit Oil Pressure Out of Limits at 100% RPM and at Normal TMT	025 00	025 00	025 00
RPM Indicating System Check	025 00	025 00	025 00
Starting Time Limit Exceeded While TMT is Well Below Maximum (Cold Start)	025 00	025 00	025 00

Title	WP Number Maintenance Allocation 1st	2nd	3rd
Tachometer Indicator/Generator Fault Isolation	025 00	025 00	025 00
Tailpipe Torching	025 00	025 00	025 00
Thermocouple System Check	025 00	025 00	025 00
TMT Too High During Acceleration (Hot Start) or EMS Confirms CTMT Exceeds 830°C on Start	025 00	025 00	025 00
Torquemeter Pickup Unit Check	025 00	025 00	025 00
Torquemeter Runout Test	025 00	025 00	025 00
Unable to Obtain Correct Maximum TMT with DETC Switch in CONTROL or LIMIT Positions	025 00	025 00	025 00
Vibration Indication Limits Exceeded	025 00	025 00	025 00
Vibration Indications High	025 00	025 00	025 00
Vibration Indicator Readings Fluctuate	025 00	025 00	025 00
Reduction Gear Unit Assembly With Safety Coupling Assembly and Torquemeter Unit Removal and Installation			
Removal	027 00	027 00	027 00
Turbine Coupling Shaft Cleaning, Inspection and Repair			
Cleaning	052 00	052 00	
Inspection	052 00	052 00	
Repair	052 00	052 00	
Turbine Unit Assembly			
Front Bearing Cage and Bearing Support Assembly	055 00	055 00	
Installation of Inner Combustion Chamber	055 00	055 00	
Rear Turbine Bearing Support Assembly	055 00	055 00	
Rotor Assembly Installation	055 00	055 00	
Turbine Assembly	055 00	055 00	
Turbine Front Bearing Cage Installation	055 00	055 00	
Turbine Inlet Case Installation	055 00	055 00	
Turbine Rear Bearing Clamp Nut Installation	055 00	055 00	
Turbine Rotor and Vane Assembly	055 00	055 00	
Turbine Rotor Axial Clearance Check	055 00	055 00	
Turbine Unit Assembly Removal and Installation			
Cleaning Diffuser Sump Area	030 00	030 00	
Combustion Liners, Inner Casing Installation	030 00	030 00	
Combustion Outer Case Installation	030 00	030 00	
Turbine Axial Clearance Measurement	030 00	030 00	
Turbine Removal	030 00	030 00	

Title	WP Number Maintenance Allocation 1st	2nd	3rd
Turbine Rotor Clearance Adjustments	030 00	030 00	
Turbine Unit Installation	030 00	030 00	
Turbine Unit Disassembly			
Combustion Chamber Inner Casing and Inner Casing Liner Removal	053 00	053 00	
Disassembly	053 00	053 00	
Turbine Front Bearing Outer Ring and Front Support Removal	053 00	053 00	
Turbine Inlet Casing Removal	053 00	053 00	
Turbine Rear Bearing Support Disassembly	053 00	053 00	
Turbine Rotor Assembly Removal	053 00	053 00	
Turbine Rotor Axial Clearance Check	053 00	053 00	
Turbine Unit Parts Cleaning, Inspection and Repair			
Cleaning	054 00	054 00	
Combustion Chamber Inner Casing	054 00	054 00	
Combustion Chamber Inner Casing Liner	054 00	054 00	
First and Fourth Stage Wheel Bearing Journals	054 00	054 00	
First Stage Turbine Vane Saddle Surfaces Repair	054 00		
Inner Rear Exhaust Cone	054 00	054 00	
Inspection and Repair	054 00	054 00	
Turbine Bearings	054 00	054 00	
Turbine Blade Inspection and Rework Limits	054 00	054 00	
Turbine Coupling Shaft	054 00	054 00	
Turbine Front Bearing Cage	054 00	054 00	
Turbine Front Bearing Support	054 00	054 00	
Turbine Front Bearing Vibration Damper	054 00	054 00	
Turbine Guide Vane and Seal Support	054 00	054 00	
Turbine Inlet Casing	054 00	054 00	
Turbine Rear Bearing Cage Cap	054 00	054 00	
Turbine Rear Bearing Support	054 00	054 00	
Turbine to Compressor Tie Bolt	054 00	054 00	
Turbine Unit Oil Passages	054 00	054 00	
Turbine Vane Assemblies	054 00	054 00	
Turbine Vane Casing	054 00	054 00	
Turbine Vane Ceramic Tip Seal and Honeycomb Blade Track	054 00	054 00	
Wear Inspection	054 00	054 00	

INTRODUCTION

INTERMEDIATE MAINTENANCE INSTRUCTIONS

T56–A–427

Turboprop Engine

1. **PURPOSE.**

2. This technical manual details all necessary information required to perform intermediate maintenance on the Allison T56–A–427 turboprop engine.

3. The T56 engine consists of an axial flow, internal combustion, gas turbine power section which is connected to a reduction gear by a torquemeter and two supporting struts.

4. **SCOPE.**

5. INTRODUCTION. This manual is produced to work package (WP) format; each WP contains approved intermediate level maintenance information and instructions. The WPs are arranged in a general workflow sequence and can be grouped into two main categories.

6. Reference Information. This category contains WPs detailing:

a. Support Equipment.

b. Reference Materials.

c. Engine Description and Operation.

d. Standard Practices.

7. Maintenance Information. This category contains WPs detailing:

a. Preparation for Service or Storage.

b. Engine Testing.

c. Pre–induction and Inspection.

d. Removal and Installation.

e. Disassembly, Cleaning, Inspection, Repair and Assembly.

8. ALPHABETICAL INDEX. WP 001 00 contains an alphabetical index of all WP titles and significant paragraph headings contained throughout this manual; in addition, where applicable, titles are repeated listed by significant modifiers. Where WP/paragraph content is peculiar to a specific engine model, the model No. will follow the WP title/paragraph heading in parentheses. The user of this manual shall assume joint applicability to all engine models where this information does not appear.

9. MAINTENANCE ALLOCATION.

10. The Gas Turbine Maintenance Program is based on a three degree concept in which each intermediate level maintenance task is identified as either first degree (I–1), second degree (I–2) or third degree (I–3). The maintenance allocation degree for each WP in this manual is shown against the WP title in the Alphabetical Index (WP 001 00).

11. Maintenance site capability, support equipment provisioning, and spare parts provisioning is determined according to the degree each Intermediate Maintenance Activity (IMA) is capable of supporting; subsequently an I–3 WP may be performed at a higher degree IMA such as I–2 or I–1, but an I–1 WP may not be performed at a lower degree IMA such as I–2 or I–3, unless indicated otherwise in WP 001 00.

12. If an engine is received at a maintenance activity which is not capable of performing the required maintenance task, the engine shall be declared Beyond Capability of Maintenance (BCM) and shall be transferred to a maintenance activity having the required capability in accordance with OPNAVINST 4790.2.

13. SUPPORT EQUIPMENT. WP 003 00 contains a complete alphanumerical listing of all support equipment required in the maintenance tasks detailed throughout this manual. The alphanumerical listing also details the maintenance level and degree at which the support equipment is required.

14. MATERIALS REQUIRED. WP 004 00 contains tabular alphanumerical listings of all consumable materials required in the maintenance tasks detailed throughout this manual. The tabular alphanumerical listings also detail the maintenance level and degree at which the material is required.

15. REFERENCE MATERIAL. Table 1 is a consolidated list of all technical documents required to support specific WPs throughout this manual; these documents are identified as required in the Reference Materials List in each affected WP.

16. COPY FREEZE DATE.

17. The copy freeze date is the date established by the procuring activity after which the preparing activity will not insert further additions, deletions, and changes to the publication material. This does not include last–minute corrections of obvious errors that are essential to safety or equipment performance. Additions, deletions, and changes accumulated after the copy freeze date shall be held for insertion in the next change to the publication.

18. MANUAL DISTRIBUTION.

19. Procedures to be used by naval activities and other Department of Defense activities requiring NAVAIR technical manuals are defined in NAVAIR 00–25–100 and NAVAIRINST 5605.5A.

20. To automatically receive future changes and revisions to NAVAIR technical manuals, an activity must be established on the Automatic Distribution Requirements List (ADRL) maintained by the Naval Air Technical Data and Engineering Service Command (NATEC). To become established on the ADRL, notify your activity Central Technical Publications Librarian. If your activity does not have a library, you may establish your automatic distribution requirements by contacting the Commanding Officer, NATEC, Attn: Distribution, NAS North Island, Bldg. 90, P.O. Box 357031, San Diego, CA 92135–7031. Annual reconfirmation of these requirements is necessary to remain on automatic distribution. Please use your NATEC assigned account number whenever referring to automatic distribution requirements.

21. If additional or replacement copies of the manual are required with no attendant changes in the ADRL, they may be ordered by submitting a MILSTRIP requisition in accordance with NAVSUP 485 to Routing Identifier Code “NFZ”. MILSTRIP requisitions can be submitted through your Supply Office, via Navy message, or SALTS to DAAS (Defense Automated Address System), or through the DAAS or NAVSUP web sites. For assistance with a MILSTRIP requisition, contact the Naval Inventory Control Point (NAVICP) General Customer Service Desk at (877) 418–6824. Qyestions concerning publications can be answered by calling DSN: 442–2626 or (215) 697–2626.

22. **MANUAL USE.**

23. GENERAL. Before performing any task, the user of this manual shall read and understand the relevant WP, and ensure that all support equipment and materials required are available.

24. It is essential that WARNINGS, CAUTIONS and NOTES are understood and applied before, and during all phases of operation and maintenance.

25. WARNINGS AND CAUTIONS APPLICABLE TO HAZARDOUS MATERIALS.

26. Warnings and cautions for hazardous materials listed in this manual are designed to apprise personnel of hazards associated with such items when they come in contact with them by actual use. Additional information related to hazardous materials is provided in OPNAVINST 5100.23 Navy Occupational Safety and Health (NAVOSH) Program Manual and the DOD 6050.5 Hazardous Materials Information System (HMIS) series publications. Consult your local safety and health staff concerning specific personnel protective requirements and appropriate handling and emergency procedures.

27. Each maintenance WP in this manual instructs the minimum maintenance tasks required to perform the general subject of the WP. All tasks within a WP shall be mandatory unless otherwise stated. Non–mandatory tasks are indicated by the words “(If Required)”.

28. ABBREVIATIONS. The first time an abbreviation is used within a WP, it will follow its definition and will be enclosed by parentheses.

EXAMPLE

Work Package (WP)

At all subsequent uses, within the same WP, the abbreviation only is shown without parentheses; refer to Table 2 and ASME Y14.38M for a complete listing of abbreviations and definitions used in this manual.

29. WORK PACKAGE FORMAT. The usability of a WP is the direct result of applying coordinated techniques to improve access of technical information and to simplify presentation methods; this is accomplished through controlled text legibility, highly visible primary and secondary paragraph headings, coordinated and consolidated text and illustrations by task.

30. All WPs numbered 005 00 and above are technical content WPs; the title pages follow a standard format (figure 1).

31. Publication Number – this is the official NAVAIR Identification Number assigned to this publication.

32. Work Package Number – a five digit number, with a space between the third and fourth digits, assigned to each WP task contained in the manual. The WP are arranged in the manual in numerical sequence.

33. Publication Date, Revision Date, or Change Number and Date – the date appearing on the WP title page below the publication number. The dates are defined as follows:

- Publication Date: The issue date of the basic manual. This date will appear only on the title pages of all WPs in the manual.

- Revision Date: The issue date of the revised manual (replaces publication date). This date will appear only on the title pages of all WPs in the manual.

- Change Number and Date: The change number and issue date of the current change to the manual. The change number and date will appear on the title page and text pages of each WP changed in part in the current issue of the manual. When a WP is revised (during the manual change) the change number and date will appear on all pages of the WP and a replacement notice will appear below the Effectivity Notice in the title block.

34. Page Number and Count – indicates individual page number within the WP, and total number of subsequent pages.

Table 1. Consolidated List of Technical Publications

Publication Number	Title
AE–AGT56–SUM–000	T56–A–427 Turboprop Engine Monitoring System (EMS) Ground Station Software User's manual, Organizational and Intermediate Maintenance
A1–E2C2A–QEC–000	Quick Engine Change Manual, Intermediate Maintenance with Illustrated Parts Breakdown
A1–E2C2A–QEC–010	Quick Engine Change Manual, Intermediate Maintenance with Illustrated Parts Breakdown
Cataloging Handbook H4/H8	Commercial and Government Entity (Cage)
MIL–C–5541	Chemical Conversion Coating on Aluminum Alloys
MIL–H–25579	Fuel Hose Pressure Test Requirements
MIL–P–22438	Electrical and Electronic Receptacle Panel
MIL–S–6872	Wire Braid Repair
NAVAIRINST 4423.3	Assignment and Application of Uniform Source Maintenance and Recoverability (SM&R) Codes
NAVWEPS 17–15AC–10	Unitized Torquemeter Indicator Test Set Operation and Service Instructions with Illustrated Parts Breakdown
OPNAV Form 4790/25A	Miscellaneous History
OPNAV Form 4790/29	Aeronautical Equipment System Record
NAVAIR 01–E2AAA–2–1	E–2C, General Aircraft Information, Organizational Maintenance
NAVAIR 01–E2AAA–2–10	E–2C, Power Plant System, Organizational Maintenance
NAVAIR 01–E2IM–6	E–2C, Power Plant Systems, Organizational Maintenance
NAVAIR 01–E2AAA–6	E–2C, Periodic Maintenance Information Cards (PMIC)
NAVAIR 01–1A–8	Aircraft and Missile Repair Structural Hardware, Engineering Manual

Table 1. Consolidated List of Technical Publications (continued)

Publication Number	Title
NAVAIR 01–1A–20	Aviation Hose and Tube Manual, Organization, Intermediate and Depot Maintenance
NAVAIR 01–1A–503	Maintenance of Aeronautical Antifriction Bearings, Organization, Intermediate and Depot Maintenance
NAVAIR 01–1A–509	Aircraft Weapons System Cleaning and Corrosion Control
NAVAIR 02B–5DG–4	Illustrated Parts Breakdown, T56–A–427 Turboprop Engine
NAVAIR 02B–5DG–6–1–1	External Tubing, Cabling and Clamping, T56–A–427 Turboprop Engine, Supplement Manual
NAVAIR 02–1–19	General Installation of Heli–Coil Inserts
NAVAIR 03–20CFA–1	Variable Pitch Aircraft Propeller System (Model No. 54460–1), Intermediate Maintenance with Illustrated Parts Breakdown
NAVAIR 07–1–503	Cleaning Materials
NAVAIR 07–1–504	Turbine Engine Cleaning
NAVAIR 15–01–500	Preservation of Naval Aircraft, Organization, Intermediate and Depot Maintenance
NAVAIR 17–15AC–4	Electrical Components Check–Out Test Set, Operation and Service Instructions with Illustrated Parts Breakdown
NAVAIR 17–15AC–7	High Current Thermocouple, Tester, Operation and Service Instructions with Illustrated Parts Breakdown
NAVAIR 17–15AC–10	Unitized Torquemeter Indicator Test Set, Operation and Service Instructions with Illustrated Parts Breakdown
NAVAIR 17–15AC–12	Thermocouple Resistance, Tester, Operation and Service Instructions with Illustrated Parts Breakdown
NAVAIR 17–15AC–15	Electronic Temperature Datum Control System Test Set, Operations and Service Instructions with Illustrated Parts Breakdown
NAVAIR 17–15AH–5	T56 Mobile Engine Test Stand Operating, Service and Repair Instructions
NAVAIR 17–15AH–28–1/–2	T56 Turboprop Engine Test System, Operation Instructions and Intermediate Maintenance with Illustrated Parts Breakdown
T.O. 33D4–6–188–1	Temperature Trim System Test Set, Operation and Service Instructions

Table 2. Abbreviations

Abbreviation	Term
AGE	Aerospace Ground Equipment
ALT	Alternate
BCM	Beyond Capability of Maintenance
BRG	Bearing
DETC	Digital Electronic Trim Control
DRLD	Drilled
FC	Functional Check
FCF	Functional Check Flight

Table 2. Abbreviations (Continued)

Abbreviation	Term
FPI	Fluorescent Penetrant Inspection
FSC	Federal Supply Classification
GSE	Ground Support Equipment
H TEMP	High Temperature
HSG	Housing
HSGI	High Speed Ground Idle
IAW	In Accordance With
IMA	Intermediate Maintenance Activity/Intermediate Level Maintenance
INC	Incorporated
INS	Insulated
JRN	Journal
MET	Mobile Engine Test
MM	Millimeter
NA	Not Applicable or Not Available
NCW	Not Complied With
NDI	Nondestructive Inspection
NINC	Not Incorporated
OP CK	Operational Check
ORG	Organizational Level Maintenance
OS	Oversize
P/N	Part Number
PE	Periodic
PH	Phased
PMEL	Precision Measurement Equipment Laboratory
PMI	Preventive Maintenance Inspection
PPC	Power Plant Change
QEC	Quick Engine Change
QTY	Quantity
RGA	Reduction Gear Assembly
S	Supersedes
SB	Superceded by
SCE CONT	Source Controlled
SE	Support Equipment
SEC	Section
SLF LKG	Self Locking
SM&R	Source, Maintainability and Recoverability

Table 2. Abbreviations (Continued)

Abbreviation	Term
SN	Serial Number
SWP	Subordinate Work Package
T/M	Torquemeter
TCTO	Time Compliance Technical Order
TD	Temperature Datum
TMDE	Test Measurement and Diagnostic Equipment
TMPI	Torquemeter Power Indication
TSLO	Time Since Last Overhaul
TSO	Time Since Overhaul
TT	Total Time
U/W	Use With
UE	Until Exhausted
WC	Work Center
WEU	When Exhausted Use
WP	Work Package
∞	Dimensions in Free State

35. Maintenance Level – indicates assigned level of maintenance.

36. General Subject – details general tasks contained in the WP.

37. Subject Nomenclature – details title of subject contained in the WP.

38. Effectivity Notice – details engine model(s) WP applies to.

39. Reference Materials List – lists all additional information needed to complete tasks detailed in the WP. Each cross–reference to additional information is repeated at point of requirement within WP. Where no reference material is needed, the word “None” appears.

40. Alphabetical Index of Subjects – lists in alphabetical order tasks detailed in the WP. All primary and secondary paragraph tasks are listed.

41. Record of Applicable Technical Directives – lists approved Engineering Change Proposals (ECP) for which technical directives have been, or are intended to be, issued.

a. The column headings are:

(1) Type/No. – the type and number of the directive, for example, Power Plant Change (PPC) 116.

(2) Date – the date that the directive was issued; a dash (–) indicates that the directive has not yet been issued.

(3) Title and ECP No. – the title of the directive followed by, if applicable, the ECP number in parentheses.

(4) Date Inc. – the date the directive was incorporated in the WP or, if the directive has not yet been issued, the date the ECP was incorporated. In the latter case the words “ECP coverage only” are entered in the Remarks column.

(5) Remarks – contains applicable remarks or, if none, a dash (–).

b. Where there are no applicable technical directives, the word “None” appears under the heading.

42. Support Equipment Required List – lists, in alphanumerical order, nonstandard tools, fixtures, gages, and standard measuring devices complete with part number or type designation, required to complete the task detailed in the paragraph (figure 2). Support equipment required to accomplish tasks referenced out to other WPs are not included. Support Equipment Required Lists are not applicable to Engine Description and Operation WPs.

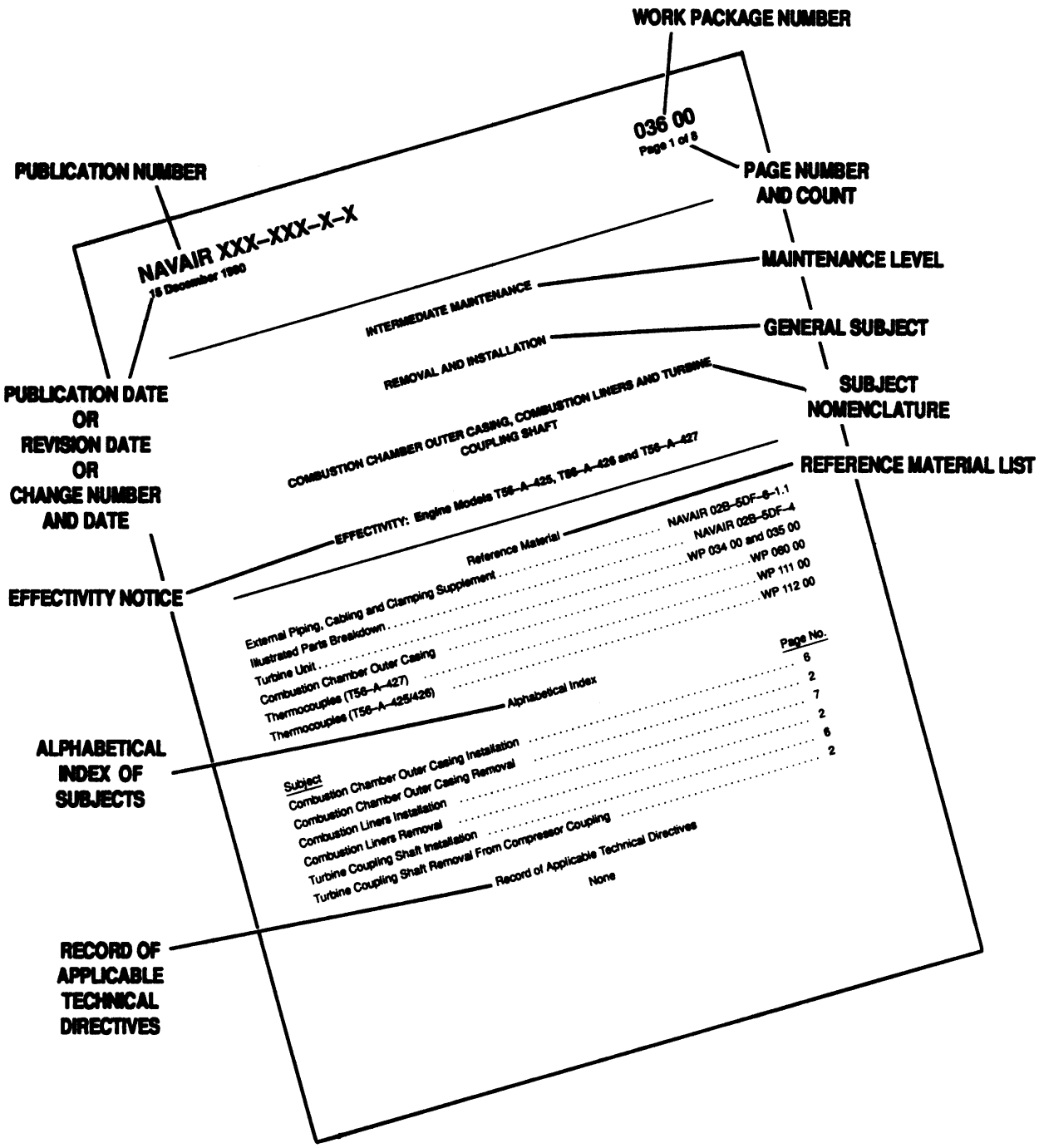

Figure 1. Work Package Title Page–Details of Standard Format

43. Materials Required List – lists, in alphanumerical order, those materials generally of a consumable nature, complete with part or specification number, required to complete the task detailed in the paragraph (figure 2). Materials required to accomplish tasks referenced out to other WPs are not included. Materials Required Lists are not applicable to Engine Description and Operation WPs.

44. Figure References – indicate the illustration in which the component or item of equipment, referred to in the text, is shown in relation to the complete assembly.

45. Index Numbers – indicates components or items of equipment within a previously referenced figure; a legend defining nomenclature of index numbers is provided with the relevant figure. Individual index numbers quoted in the text, refer to the last quoted figure number.

46. ILLUSTRATIONS. Illustrations are provided within a WP to support text and to furnish graphic identification of components and support equipment.

47. Part Numbers of components and items of support equipment are only included in illustrations when more than one item illustrated has the same nomenclature. Referencing of individual parts within an illustration may be accomplished either by direct annotation or by the use of index numbers together with a legend.

48. When only one illustration is required to support a complete procedure, the figure reference will be included in the procedure heading. Where more than one illustration is required to support a procedure, the figure reference will appear at first point–of–reference in the text; the user will continue to use the illustration (as required), until reference is made to another illustration.

49. QUALITY ASSURANCE (QA) REQUIREMENTS. Procedures that are essential to equipment performance or to safety of personnel shall be observed or checked by a quality assurance inspector prior to the technician performing the next step. Such procedures are highlighted by the addition of the abbreviation “(QA)” immediately following the procedure step.

50. All tasks contained in a procedural step which is followed by the abbreviation (QA) are subject to quality assurance requirements.

51. CHANGE/REVISION. Revisions to WP content are indicated by a change number and date on the top of the WP title page and on each revised page within the WP.

52. The changed text on each revised page is indicated by a change symbol ‘R’ or black bar on the outer margin of the page opposite the revised text.

53. REFERENCES. References to procedures within the same WP by primary paragraph heading:

EXAMPLE

refer INSTALLATION, this WP

Reference may be made to a paragraph by number within a WP where it is unreasonable to reference by title.

54. References to procedures within a WP format manual are by WP number:

EXAMPLE

install electrical cable assembly (WP 131 00)

55. References to procedures in other manuals by publication number:

EXAMPLE

Refer to NAVAIR 01–1A–16.

In this instance the referenced manual is listed in the Reference Material List on the WP title page.

56. Reference to index numbers in illustrations within a paragraph of a WP is made by the index number followed by figure number. When only one figure is referenced, the figure number is used only with the first referenced index number. Additional references are made by index numbers only:

EXAMPLE

Remove nuts (4, figure 1) and washers (5) from bolts (6).

When more than one figure is referenced in a paragraph the above format is followed until the procedure is complete or the sequence is broken by reference to another figure:

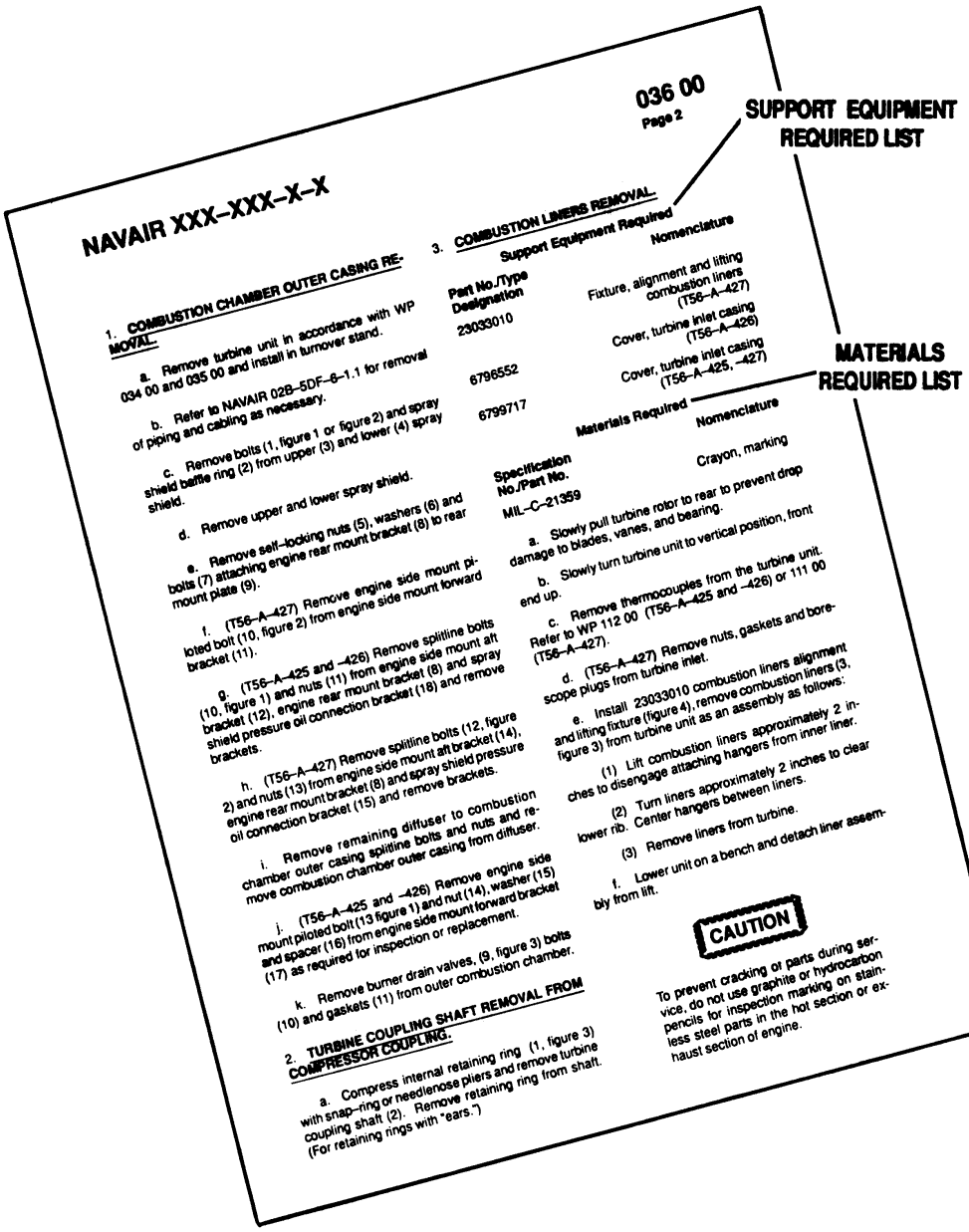

036 00
Page 2

NAVAIR XXX–XXX–X–X

1. COMBUSTION CHAMBER OUTER CASING REMOVAL.

a. Remove turbine unit in accordance with WP 034 00 and 035 00 and install in turnover stand.

b. Refer to NAVAIR 02B–5DF–6–1.1 for removal of piping and cabling as necessary.

c. Remove bolts (1, figure 1 or figure 2) and spray shield baffle ring (2) from upper (3) and lower (4) spray shield.

d. Remove upper and lower spray shield.

e. Remove self–locking nuts (5), washers (6) and bolts (7) attaching engine rear mount bracket (8) to rear mount plate (9).

f. (T56–A–427) Remove engine side mount piloted bolt (10, figure 2) from engine side mount forward bracket (11).

g. (T56–A–425 and –426) Remove splitline bolts (10, figure 1) and nuts (11) from engine side mount aft bracket (12), engine rear mount bracket (8) and spray shield pressure oil connection bracket (16) and remove brackets.

h. (T56–A–427) Remove splitline bolts (12, figure 2) and nuts (13) from engine side mount aft bracket (14), engine rear mount bracket (8) and spray shield pressure oil connection bracket (15) and remove brackets.

i. Remove remaining diffuser to combustion chamber outer casing splitline bolts and nuts and remove combustion chamber outer casing from diffuser.

j. (T56–A–425 and –426) Remove engine side mount piloted bolt (13 figure 1) and nut (14), washer (15) and spacer (16) from engine side mount forward bracket (17) as required for inspection or replacement.

k. Remove burner drain valves, (9, figure 3) bolts (10) and gaskets (11) from outer combustion chamber.

2. TURBINE COUPLING SHAFT REMOVAL FROM COMPRESSOR COUPLING.

a. Compress internal retaining ring (1, figure 3) with snap–ring or needlenose pliers and remove turbine coupling shaft (2). Remove retaining ring from shaft. (For retaining rings with "ears.")

3. COMBUSTION LINERS REMOVAL.

Support Equipment Required

Part No./Type Designation	Nomenclature
23033010	Fixture, alignment and lifting combustion liners (T56–A–427)
6796552	Cover, turbine inlet casing (T56–A–426)
6799717	Cover, turbine inlet casing (T56–A–425, –427)

Materials Required

Specification No./Part No.	Nomenclature
MIL–C–21359	Crayon, marking

a. Slowly pull turbine rotor to rear to prevent drop damage to blades, vanes, and bearing.

b. Slowly turn turbine unit to vertical position, front end up.

c. Remove thermocouples from the turbine unit. Refer to WP 112 00 (T56–A–425 and –426) or 111 00 (T56–A–427).

d. (T56–A–427) Remove nuts, gaskets and borescope plugs from turbine inlet.

e. Install 23033010 combustion liners alignment and lifting fixture (figure 4), remove combustion liners (3, figure 3) from turbine unit as an assembly as follows:

(1) Lift combustion liners approximately 2 inches to disengage attaching hangers from inner liner.

(2) Turn liners approximately 2 inches to clear lower rib. Center hangers between liners.

(3) Remove liners from turbine.

f. Lower unit on a bench and detach liner assembly from lift.

CAUTION

To prevent cracking of parts during service, do not use graphite or hydrocarbon pencils for inspection marking on stainless steel parts in the hot section or exhaust section of engine.

SUPPORT EQUIPMENT REQUIRED LIST

MATERIALS REQUIRED LIST

Figure 2. Work Package Text Page–Details of Standard Format

EXAMPLE

c. Remove retaining bolts (30, figure 12) and washers (31). Lift air valve (32) from support

d. Disassemble air valve (1, figure 13).

57. Reference to illustrations (without index numbers) within a WP is made by figure number:

EXAMPLE

Install 6796559 puller (figure 7) and ––

or

Rivet head shall be flush to 0.010 inch below adjacent surface (figure 2) after ––

58. **ADDITIONAL MANUALS**

59. For Intermediate Maintenance, the NAVAIR 02B–5DG–6–1–1 Tubing, Cabling and Clamping Supplement is used with NAVAIR 02B–5DG–6–1. These manuals, in conjunction with NAVAIR 02B–5DG–6–2, provide instructions for Depot Maintenance. Refer to NAVAIR 02B–5DG–4 Illustrated Parts Breakdown when part number identification and USABLE ON CODE is needed to comply with any WP in this manual.

60. **TECHNICAL DIRECTIVES.**

61. Technical Directives, in the form of Power Plant Changes (PPC), may be issued following approval of an Engineering Change Proposal (ECP) by a NAVAIR Change Control Board (CCB).

62. Technical Directives contain instructions and information to direct the accomplishment and recording of a material change, repositioning, modification, or alteration in the characteristics of the equipment to which it applies.

63. Applicable technical directives are incorporated in the relevant WP and, if necessary, procedural steps and/or descriptions are altered to describe both pre– and post–modification configurations.

64. **FLEET SUPPORT TEAM (FST)**

65. The FST is the naval activity having prime engineering cognizance over the aircraft, weapon system, or equipment for which a technical manual is being prepared. The responsibilities of the FST are:

a. To provide technical counsel.

b. To provide data, materials, and equipment as coordinated with the Quality Assurance Division (QAD).

c. To recommend technical inputs to maintenance manuals.

Table 3. Historical Record of Applicable Technical Directives

Type/No.	Date	Title and ECP No.	Date Inc.	Remarks
PPC 112 Am 1	31 Oct 97	Redesigned Prop Shaft Oil Seal, Installation of (ECP No. 2080R1–ATP 20071)	15 Jul 04	–––
PPC 115	–––	15 Micron Oil Filter	15 Jul 04	
PPC 119	15 Jun 04	T56 Engine Borescope and Igniter Plugs, Incorporation	15 Jul 04	–––
PPC 121	03 Mar 04	T56–A–427 Redesigned Propeller Shaft Plug Installation (ECP No. 2129R)	15 Jul 04	–––
(TDC03)	–––	E–2 Quick Engine Change Kit (QEC) Change No. 10	15 Jul 04	–––

INTERMEDIATE MAINTENANCE

ALPHANUMERIC LISTING

SUPPORT EQUIPMENT

Reference Material

Intermediate Maintenance Instructions . . . . . WP 002 00

Record of Applicable Technical Directives

None

1. **INTRODUCTION.**

2. This work package (WP) provides a consolidated list of support equipment used throughout the manual.

3. The table is divided into four columns. Column headings and explanation of use are as follows:

a. Part No./Type Designation – provides part number or type designation for support equipment. Listing is sorted alphanumerically.

b. Nomenclature – provides full nomenclature of support equipment.

c. WP Number – identifies the WP(s) where each item of support equipment is required.

d. Maintenance Level and Degree – provides the lowest degree of intermediate maintenance at which a particular item of support equipment will be required while using this manual. Refer to WP 002 00 for explanation of maintenance allocation usage.

4. Support equipment listed in this WP shall only be used when specifically instructed in the applicable maintenance WP. Support equipment shall not be used for any purpose other than intended function.

Support Equipment

Part No./Type Designation	Nomenclature	WP Number	Maintenance Level and Degree
---	Flowmeter, 800-1000 PPH	019 00	I-3
---	Gage, depth	055 00	
---	Gage, feeler	027 00, 039 00, 040 00, 055 00	I-3
---	Gage, 30 psig	019 00	I-3
---	Gage, 150 psig	019 00	I-3
---	Gloves, insulated	040 00, 041 00	
---	Hammer, plastic	041 00	
---	Indicator, dial	039 00, 040 00, 049 00	I-2
---	LCR meter, digital	022 00	
---	Micrometer, (0-1 inch)	031 00, 049 00, 055 00, 092 00	I-2
---	Micrometer, (1-2 inch)	049 00	I-2
---	Micrometer, inside	055 00	I-2
---	Multimeter, digital	022 00, 025 00, 094 00	
---	Plate, surface	040 00	I-3
---	Power supply (10 V DC)	084 00	I-3
---	Power supply (28 V DC)	084 00	I-3
---	Punch, spherical end	034 00	
---	Scribe, bearing (0.030 in. dia ball)	069 00	I-2
---	Scribe, bearing (0.080 in. dia ball)	014 00	I-2
---	Scribe, bearing (0.120 in. dia ball)	014 00	I-2
---	Shim stock, 0.060	034 00	
---	V-block	039 00	I-3
---	Wrench, torque (0-25 lb in.)	019 00, 094 00	
---	Wrench, torque (0-50 lb in.)	024 00, 026 00, 031 00, 044 00, 058 00, 064 00, 081 00, 086 00, 087 00, 094 00	I-3
---	Wrench, torque (0-100 lb in.)	019 00, 023 00, 034 00, 037 00, 046 00, 049 00, 055 00, 064 00, 065 00, 070 00, 071 00, 072 00, 082 00, 083 00, 085 00, 092 00, 094 00	I-3
---	Wrench, torque (0-150 lb in.)	019 00, 020 00, 023 00, 024 00, 027 00, 029 00, 030 00, 040 00, 055 00, 059 00, 060 00, 062 00, 063 00, 064 00, 066 00, 067 00, 068 00, 075 00, 077 00, 078 00, 079 00, 081 00, 084 00, 085 00, 086 00, 087 00, 090 00, 092 00, 094 00	I-3
---	Wrench, torque (0-200 lb in.)	046 00, 049 00, 056 00, 065 00, 082 00	I-3

Support Equipment

Part No./Type Designation	Nomenclature	WP Number	Maintenance Level and Degree
–––	Wrench, torque (0–300 lb in.)	019 00, 025 00, 026 00, 027 00, 028 00, 029 00, 030 00, 032 00, 040 00, 046 00, 049 00, 064 00, 072 00, 074 00, 076 00, 078 00, 081 00, 084 00	I–3
–––	Wrench, torque (0–400 lb in.)	044 00	I–3
–––	Wrench, torque (0–500 lb in.)	020 00, 025 00, 027 00, 028 00, 029 00, 030 00, 037 00, 040 00, 064 00, 068 00, 070 00, 072 00, 073 00, 075 00, 090 00	I–3
–––	Wrench, torque (0–600 lb in.)	019 00, 021 00, 023 00, 039 00 058 00	I–3
–––	Wrench, torque (0–750 lb in.)	040 00	I–3
–––	Wrench, torque (0–1000 lb in.)	027 00, 029 00, 031 00, 034 00, 064 00	I–3
–––	Wrench, torque (0–2000 lb in.)	030 00	I–3
–––	Wrench, torque (150–300 lb ft.)	094 00	I–3
–––	Wrench, torque (200–1000 lb in.)	019 00	
–––	Wrench, torque (300–2500 lb in.)	019 00	I–3
–––	Wrench, torque (500–1500 lb in.)	040 00	I–3
AD33480–5	Test set, propeller synchrophaser	034 00	
AN/USM–311	Multimeter	020 00, 041 00, 062 00, 072 00, 073 00, 079 00	I–3
CG250–8A–9	Hammer, 2 lb slide	056 00	I–2
CJ84–10	Adapter	056 00	I–2
CX1416	Wrench, fuel pump flange nut	058 00	I–3
GR 1864	Meter, megohm	087 00	I–3
HP–41CV	Calculator (use with HP82104A)	023 00	I–2
HP–48SX/GX	Calculator	023 00	I–2
HP82104A	Reader, program card (use with HP–41CV)	023 00	I–2
HS9903	Pin, flight idle, 3 step propeller rigging	027 00	I–3
LW–201C	Oven (400°F max)	016 00	I–2
H913	Hose (Blackhawk)	039 00	I–3
Net–4/3000B	Trailer, transportation	021 00	I–3
No. 47	Drill bit	048 00	I–3
PON–6	Unit, preoiler & servicing	025 00	I–3
P–76	Pump, hydraulic (Blackhawk)	039 00	I–3
PXA102F	User's manual, Videoprobe XL Pro	023 00	I–2
PXA560	Kit, Accessory for Videoprobe XL Pro	023 00	I–2
PXLM620ASYS	Videoprobe, flexible with defect measuring system	023 00	I–2

Support Equipment

Part No./Type Designation	Nomenclature	WP Number	Maintenance Level and Degree
SWE 8100	Powerwrench, torque (Sweeney)	034 00, 038 00, 040 00	I–3
SWE 8471	Plate, anchor	028 00, 034 00, 038 00 040 00	I–3
T27341	Puller, mechanical, solenoid valve seat	060 00	I–3
TD5–500	Tensiometer	019 00, 027 00	I–3
XA207SC–XL	Battery pack, for Videoprobe XL Pro	023 00	I–2
ZA–43	Kit, inspection, fluorescent dye penetrant	014 00, 021 00, 027 00, 045 00, 050 00, 060 00, 061 00, 063 00	I–3
1480AS500	Stand, horizontal engine maintenance	021 00	I–3
2002AS100–1	Borescope set, flexible	023 00, 025 00	I–3
2004AS100–1	Source, fiber–optic light	023 00, 025 00	I–3
2000AS720–1	Test Set, T1 Turbine Inlet Temperature	024 00	
2000AS736–1–80	Cable Set, Test Cell, T1 Turbine Inlet Temperature	024 00	
23002970	Test set, torquemeter runout	022 00, 023 00	I–2
23003266	Test set, torquemeter runout	022 00, 023 00	I–3
23003269	Fixture, turbine vane casing weld repair	054 00	I–2
23004325	Gage, propeller shaft thrust nut lock installation checking	034 00	I–3
23005025	Punch, cuplock reforming	034 00, 038 00	I–2
23007694	Bracket, reduction gear maintenance test vibration	022 00	I–2
23030156	Adapter cable, electrical components checkout	025 00	I–3
23030189	Tester, thermocouple resistance	025 00, 083 00	I–3
23032404	Spline, starter shaft, 3/4 in. drive turning	025 00, 028 00, 040 00	I–3
23032969	Terminal, maintenance, hand–held (HMT)	022 00, 023 00	I–2
23032975	Sling, turbine rotor assembly	053 00, 054 00	I–3
23032994	Adapter, power section, assembly lifting	019 00, 027 00	I–3
23032996	Bracket, turbine, lifting	019 00, 027 00, 030 00	I–3
23032998	Adapter, turbine unit assembly lifting	030 00	I–2
23033000	Adapter, attaching turbine unit to 6799764 adapter	030 00, 055 00	I–3
23033001	Adapter, power section to parallel rail system supporting	055 00	I–2
23033002	Puller, rear turbine bearing and seal	053 00	I–2
23033003	Puller, turbine front labyrinth seal	053 00	I–2
23033004	Fixture, turbine vane alignment	055 00	I–2
23033008	Shroud, turbine section	022 00	I–2
23033009	Pusher, entrance guide vane assembly	047 00	I–2

Support Equipment

Part No./Type Designation	Nomenclature	WP Number	Maintenance Level and Degree
23033010	Fixture, alignment and lifting, combustion liner	031 00	I–3
23033011	Template set, compressor blade rework limit	045 00	I–2
23034201	Fixture, checking, accessory drive pads concentricity and squareness	040 00	I–3
23034229	Plate, alternator drive gear assembly bearing inner ring puller	038 00	I–2
23034230	Compressor, pinion front bearing, outer ring	040 00	
23034310	Puller, gearbox pinion front (hydraulic) bearing	039 00	I–1
23034311	Holder, pinion gear assembly	039 00	I–1
23038034	Separator, turbine vane casing and turbine vane assembly	053 00	I–2
23051179	Case, containment, pinion shaft and puller	039 00	I–1
23051180	Fixture, installation tool, propeller shaft seal	034 00	
23051184	Module, engine performance and minimum power	023 00	I–2
23051218	Puller, propeller shaft seal	038 00	I–3
23051225	Fixture, first stage vanes assembly	055 00	I–2
23051228	Adapter, compressor horizontal vibration pickup mounting	022 00	I–2
23055326	Fixture, fuel control linkage setting	065 00	I–3
23055343	Gage, checking bearing end play	049 00	I–3
23068568	Puller, propeller shaft plug	035 00	
2308	Puller, 1/4–28 thread tee handle	027 00, 047 00, 053 00, 070 00	I–3
3110	Work stand, parallel rail	021 00	
3464–4	Wrench, compressor extension shaft and compressor	047 00, 049 00	I–2
3464–5	Holder, compressor extension shaft and compressor	030 00, 047 00, 049 00	I–2
3718	Puller, splitline bolt	038 00, 047 00	I–2
3732	Holder, compressor extension shaft assembly	047 00, 049 00	I–2
3738	Holder, starter shaft	038 00, 040 00	I–2
3755	Holder, compressor extension shaft forward spline	030 00, 049 00	I–2
3762	Guide pin, compressor rotor front bearing cap	049 00	I–2
3826	Lift, accessory drive assembly	029 00, 042 00, 044 00	I–2
3838	Puller, compressor extension shaft bearing housing assembly	047 00, 049 00	I–2

Support Equipment

Part No./Type Designation	Nomenclature	WP Number	Maintenance Level and Degree
3855	Wrench, compressor rear bearing nut	046 00, 047 00, 049 00	I–2
3856	Gage, turbine rotor to vane assembly axial clearance	030 00, 053 00, 055 00	I–2
4–106–0001	Transducer, vertical vibration	022 00	I–3
4–106–0002	Transducer, horizontal vibration	022 00	I–3
4000A	Trailer, Air Logistics Corporation	021 00	I–3
5SE00655–1	Generator, tach model B1444	022 00	I–3
53713	Stone, Arkansas	046 00, 048 00	I–3
6795798	Adapter, diffuser to 6796870 mounting adapter attaching	021 00	I–2
6795866	Sling, accessory drive assembly lifting	029 00	I–2
6795870	Tube, connecting power package to air inlet trunnion adapter	021 00	I–3
6795877	Yoke, 6796814 adapter collapsible support	021 00	I–3
6795893	Fixture, cup washer dimpling	040 00	I–2
6795894	Wrench, end slot spanner nut spanner	038 00, 040 00	I–2
6795905	Stand, engine component turnover	027 00, 030 00, 038 00, 040 00, 046 00, 047 00, 049 00, 055 00	I–2
6796010	Lift, propeller shaft and planet gear assembly	019 00, 038 00, 040 00	I–2
6796014	Plate, planet gear index	038 00, 040 00	I–2
6796019	Wrench, accessory drive shaft bearing retaining nut	040 00	I–2
6796042–1	Gage, compressor rotor to vane assembly axial clearance	049 00	I–1
6796042–3	Gage, compressor rotor to vane assembly axial clearance	049 00	I–2
6796046	Wrench, pinion input gear rear bearing retainer nut	039 00	I–1
6796056	Guide, propeller shaft to roller bearing	040 00	I–2
6796059	Wrench, reduction gear eyebolt nut	027 00, 038 00	I–3
6796074	Wrench, oil pump drive journal and tachometer drive idler spanner nut	040 00	I–2
6796079	Wrench, reduction gear eyebolt pin	027 00	I–3
6796089	Attachment, propeller brake release	025 00, 028 00, 040 00	I–3
6796125–5	Plug, side accessories gear bearing	047 00	I–2
6796125–6	Base, side accessories gear bearing	047 00	I–2
6796136	Wrench, safety coupling outer member retaining nut	028 00	I–3
6796169	Guide pin, reduction gear thrust bearing retainer	040 00, 046 00, 049 00	I–2

Support Equipment

Part No./Type Designation	Nomenclature	WP Number	Maintenance Level and Degree
6796178	Puller, main reduction gear bearing outer race	038 00	I-2
6796182	Spline, starter shaft turning	025 00, 040 00	I-2
6796190	Driver, compressor rear bearing and seal	046 00	I-2
6796194	Drift, compressor front bearing outer race	047 00	I-2
6796201	Puller plates, accessory idler gear shaft bearing	042 00	I-2
6796202	Puller plate, center accessory drive gear housing	042 00	I-2
6796203	Puller plate, accessory main drive shaft gear bearings	042 00	I-2
6796204	Puller plate, accessory main drive shaft bearing	042 00	I-2
6796205	Puller plate, side accessory drive shaft gear bearings	042 00	I-2
6796206	Puller plate, tachometer drive shaft bearings	038 00, 040 00	I-2
6796208	Plug, accessory main drive shaft	042 00	I-2
6796209	Plug, accessory drive shaft gear	042 00, 044 00	I-2
6796211	Installation plate, accessories bearings	044 00	I-2
6796214	Puller plate, starter idler gear rear bearing	038 00	I-2
6796221	Pusher, starter shaft bearing cage	038 00	I-2
6796235	Puller plates, compressor extension shaft bearing	047 00	I-2
6796249	Support, accessory drive bearing removal	042 00, 044 00, 047 00	I-2
6796250	Support, reduction gear bearing removal	038 00, 040 00	I-2
6796253	Support, pinion gear	039 00	I-1
6796262	Support, compressor rear bearing nut wrench	046 00, 047 00	I-2
6796300	Cover, propeller shaft	027 00	I-3
6796301	Support, torquemeter spline	027 00, 028 00	I-3
6796304	Cover, torquemeter inner or outer shaft	028 00, 041 00	I-3
6796351	Support, safety coupling retaining nut wrench	028 00	I-3
6796354	Expander, tachometer drive shaft gear oil seal	044 00	I-3
6796355	Expander, accessory drive shaft oil seal	044 00	I-3
6796382	Support, wrench	030 00, 055 00	I-3
6796460	Puller, tachometer generator drive oil seal	042 00	I-3
6796461	Puller, fuel pump drive oil seal	042 00, 058 00	I-3
6796467	Puller, propeller shaft plug	035 00, 038 00	I-3

Support Equipment

Part No./Type Designation	Nomenclature	WP Number	Maintenance Level and Degree
6796472	Puller, planet gear rear carrier bearing inner race	038 00	I-2
6796521	Puller, starter idler gear rear bearing outer race	038 00	I-2
6796522	Puller, starter idler gear front bearing outer race	038 00	I-2
6796525	Drift, generator drive shaft assembly bearing inner race	038 00	I-2
6796526	Plate, generator drive shaft bearing cage support	038 00, 040 00	I-2
6796527	Drift, generator drive shaft assembly rear bearing outer race	038 00, 040 00	I-2
6796529	Wrench, turbine rear bearing clamp nut spanner	030 00, 055 00	I-3
6796530	Wrench, spanner	030 00	I-3
6796531	Puller, turbine rear bearing cage	053 00	I-3
6796533	Wrench, spanner turbine to compressor tie bolt locknut	030 00	I-3
6796535	Adapter, turbine rotor to vane assembly axial clearance gage	030 00, 053 00, 055 00	I-3
6796540	Adapter, lifting eye (use with 6796833-201)	019 00, 047 00, 049 00	I-3
6796541	Puller, turbine rear bearing outer race	053 00	I-2
6796546	Cover, turbine rotor	053 00, 055 00	I-3
6796558	Drift, scavenge pump drive gear (pinion)	039 00	I-1
6796559	Puller, scavenge pump drive gear (pinion)	039 00	I-1
6796568	Adapter, coordinator control shaft torque	027 00	I-3
6796569	Wrench, turbine rotor axial movement positioning	030 00, 053 00, 055 00	I-3
6796593	Wrench, speed switch gear retainer bolt spanner	042 00, 044 00	I-2
6796594	Holder, accessory drive shaft gear assembly	042 00, 044 00	I-2
6796599	Wrench, generator idler bearing spindle nut spanner	038 00, 040 00	I-2
6796608	Drift, hydraulic pump idler gear	038 00	I-2
6796618	Holder, reduction gear power section strut assembly bolt	027 00	I-3
6796619	Pliers, metal, O-ring seal removing	053 00	I-3
6796645	Wrench, No. 60 propeller shaft thrust bearing nut lock spline	034 00, 038 00	I-3
6796673	Fixture, scavenge oil tube alignment	020 00	I-3
6796691	Retainer, propeller shaft bearing roller	038 00	I-2
6796698	Fixture, fuel control holding	064 00	I-3

Support Equipment

Part No./Type Designation	Nomenclature	WP Number	Maintenance Level and Degree
6796708	Fixture, propeller control linkage checking	027 00	I–3
6796727	Adapter, vertical vibration pickup mounting	022 00	I–2
6796735	Wrench, oil screen spanner	037 00, 040 00, 072 00	I–3
6796757	Pin, propeller control linkage rigging	027 00	I–3
6796774	Fixture, fuel control cutoff rod assembly setting	065 00	I–3
6796784	Stand, engine overhaul	021 00, 027 00	I–3
6796814	Adapter, air inlet housing adapter mounting	021 00, 030 00	I–3
6796816	Tube, connector, air inlet housing adapter (6796814) to diffuser adapter (6799514)	021 00	I–3
6796819	Adapter, compressor unit to 6796847 adapter attaching	047 00, 049 00	I–2
6796820	Adapter, reduction gear to 6799764 adapter attaching	027 00, 038 00	I–2
6796828	Compressor, thrust signal plunger spring	036 00	I–3
6796832	Stand, reduction gear assembly transportation and storage	027 00, 028 00, 038 00, 040 00	I–3
6796833	Stand, compressor rotor transportation and storage	019 00, 047 00, 049 00	I–2
6796833–201	Adapter, assembly	047 00, 049 00	I–3
6796833–202	Assembly, lifting eye	047 00, 049 00	I–3
6796834	Stand, propeller shaft and planetary gear	019 00, 038 00	I–2
6796836	Stand, turbine rotor transportation and storage	053 00	I–3
6796836–202	Lifting eye assembly, turbine rotor transportation and storage assembly	053 00	I–3
6796847	Adapter, stand to 6796965 compressor unit attaching	046 00, 047 00, 049 00	I–2
6796859	Adapter, power section to 6797692 adapter attaching	019 00, 021 00, 027 00, 047 00	I–3
6796869	Adapter, air inlet housing mounting pad to 6796784 stand trunnion	021 00	I–3
6796870	Adapter, diffuser mounting bracket to 6796784 stand mounting	021 00	I–3
6796886	Cover, compressor rotor	019 00, 047 00	I–1
6796889	Fixture, rod end internal clearance checking	069 00	I–3
6796891	Adapter, reduction gear filter torque	071 00	I–3
6796901	Compressor, compressor front bearing outer race	047 00, 049 00	I–2

Support Equipment

Part No./Type Designation	Nomenclature	WP Number	Maintenance Level and Degree
6796965	Adapter, compressor unit (air inlet housing) attaching	046 00	I–2
6796970	Box, compressor front labyrinth seal storage	047 00	I–2
6796971	Puller, front compressor labyrinth bearing and seal	047 00	I–2
6796974	Pliers, LP fuel filter retaining ring removal and installation	061 00	I–3
6796975	Depressor, LP fuel filter element support spring	061 00	I–3
6796980	Adapter, engine component to parallel rail maintenance stand rotating	027 00, 030 00, 038 00, 055 00	I–2
6796987	Turnover stand engine components assembly and disassembly	029 00, 038 00, 042 00, 044 00	I–2
6797484	Jack, turbine rotor clearance adjusting	053 00, 055 00	I–3
6797564	Gage, pinion gear assembly bushing plug	039 00	I–3
6797571	Gage, torquemeter mounting pad depth	027 00	I–3
6797574	Pusher, tachometer drive oil seal	033 00	I–3
6797587	Adapter, air inlet housing bottom pad and filter bracket to 6796814 adapter trunnion,	021 00	I–3
6797589	Fixture, sun gear hub lock tab bending	040 00	I–2
6797637	Wrench, torquemeter to safety coupling mounting bolt box	028 00	I–3
6797682	Adapter, reduction gear assembly lifting	019 00, 027 00, 038 00, 040 00	I–3
6797684	Adapter, QEC housing stabilizing	021 00	I–3
6797691	Adapter, compressor assembly lifting	046 00, 047 00	I–2
6797692	Adapter, engine assembly lifting	021 00	I–2
6797706	Adapter, reduction gear rear case trunnion	038 00	I–2
6797707	Adapter, accessory drive housing to 6796987 stand mounting	029 00, 042 00	I–2
6797708	Puller, compressor rear bearing and double labyrinth seals, flange and compressor rear bearing	046 00, 047 00	I–2
6797711	Spacer, 6796814 mounting adapter	021 00	I–3
6797753	Guide, torquemeter mid bearing	028 00	I–3
6797754	Fixture, torquemeter shaft mid bearing pulling	041 00	I–2
6797756	Pusher, mid bearing torquemeter inner race	041 00	I–2

Support Equipment

Part No./Type Designation	Nomenclature	WP Number	Maintenance Level and Degree
6797757	Plate, torquemeter mid bearing inner race puller	041 00	I–2
6797881	Retainer, torquemeter mid bearing bearing roller	028 00, 041 00	I–3
6797897	Wrench, pinion gear front bearing nut	039 00	I–1
6797898	Jig, reduction gear front case screw thread drill	039 00	I–1
6797950	Protector, propeller shaft retaining thread	022 00	I–3
6797963	Probe, compressor air bleed valve piston position	089 00	I–3
6798012–7	Adapter, flange	020 00	
6798012–17	Filter	020 00	
6798012–202	Assembly, shutoff valve	020 00	
6798012–203	Assembly, hose	020 00	
6798012–205	Connector, pressure oil tube	020 00	
6798012–210	Regulator	020 00	
6798131	Wrench, reduction gear oil pump spanner	023 00, 070 00	I–3
6798160	Adapter, reduction gear assembly lifting	027 00, 038 00	I–3
6798239	Fixture, tachometer holding	038 00, 040 00	I–2
6798242	Retainer, turbine rear bearing rollers	053 00, 055 00	I–2
6798774	Extension shaft to side gear checking fixture	049 00	I–2
6798775	Fixture, extension shaft loading	049 00	I–2
6798804	Puller, tachometer drive oil seal	033 00	I–3
6798917	Borescope, first stage turbine vanes and first stage blades	023 00, 025 00	I–2
6799150	Test set, electrical components checkout	025 00, 060 00	I–3
6799238	Isolator, vibration pickup heat	022 00	I–3
6799449	Adapter, uploading, QEC to 6799758 adapter	021 00	I–3
6799514	Adapter, diffuser bracket to parallel rail stands mounting	021 00	I–3
6799523	Adapter, turbine rotor stand trunnion	053 00	I–2
6799535	Wrench, spanner end slot spanner nut	038 00, 040 00	I–2
6799537	Fixture, cup washer dimpling	040 00	I–2
6799596	Fixture, speed sensitive control seal installation	044 00	I–2
6799619	Adapter, turbine rotor lifting	053 00, 055 00	I–2

Support Equipment

Part No./Type Designation	Nomenclature	WP Number	Maintenance Level and Degree
6799621	Wrench, turbine coupling clamp nut	053 00, 055 00	I–2
6799634	Guide, front turbine bearing inner race and rollers	055 00	I–2
6799641	Pusher, turbine inner race front bearing	055 00	I–2
6799642	Puller, front turbine bearing outer race	053 00	I–2
6799643–100	Puller, gearbox pinion rear (hydraulic) bearing	039 00	I–1
6799646	Protector, propeller shaft seal	038 00	I–2
6799708	Fixture, alignment, combustion chamber inner case oil tubes	030 00	
6799717	Cover, turbine inlet case	031 00, 053 00, 055 00	I–3
6799758	Adapter, power package reduction gear positioning trailer supporting	021 00	I–3
6799760	Puller, anti–icing probe tube assembly	093 00	I–3
6799764	Adapter, engine component adapter attaching	027 00, 030 00, 038 00, 055 00	I–3
6799765	Fixture, reduction gear assembly eyebolt alignment	027 00	I–3
6799782	Adapter, reduction gear rear case assembly lifting	038 00, 040 00	I–2
6799791	Plate, main idler gear rear bearing puller	038 00	I–2
6799792	Plate, main idler gear front bearing puller	038 00	I–2
6799793	Drift, main idler gear	038 00	I–2
6799803	Guide, turbine rear bearing	055 00	I–2
6799863	Jig, drain plug insert lockpin hole drill and driver	072 00	I–3
6799868	Fixture, bending, torquemeter to safety coupling mounting bolt lock tab	028 00	I–3
6799875	Wrench, rear carrier bearing retainer nut spanner	038 00, 040 00	I–2
6799876	Test set, torquemeter runout	023 00	
6799878	Cable, test set adapter	023 00	
6799902	Puller, turbine front bearing seal	053 00	I–2
6799969	Protector, accessory main drive shaft	029 00, 042 00, 044 00	I–2
6800372	Plug, torquemeter mid bearing shipping	019 00	I–3
6872245	Gage, internal spline no go	039 00	I–3
6872794	Die, propeller shaft thread chasing	039 00	I–3
6897430	Puller–seal, starter drive shaft	033 00	I–3
6893705	Cable, torquemeter runout adapter	022 00, 023 00	I–3

Support Equipment

Part No./Type Designation	Nomenclature	WP Number	Maintenance Level and Degree
6893714	Puller, turbine front bearing support assembly	053 00	I–3
6895966	Pusher, accessory drive shaft lip seal	033 00	I–3
6895969	Probe, thermocouple tester	025 00	I–3
76EO4000–30	Cart, corrosion control	025 00	I–3
8400–T56	Digital Optical Micrometer Inspection Set	039 00	O
803AS100–2	Test bed, T56 engine QEC test adapter	022 00	I–2

INTERMEDIATE MAINTENANCE

ALPHANUMERIC LISTING

MATERIALS REQUIRED

Reference Material

None

Record of Applicable Technical Directives

None

1. **INTRODUCTION.**

2. This work package (WP) provides a consolidated list of materials used throughout the manual.

3. The table is divided into four columns. Column headings and explanation of use are as follows:

a. Specification No./Part No. - provides specification number or part number for materials. Listing is sorted alphanumerically.

b. Nomenclature - provides full nomenclature of materials.

c. WP Number - identifies the WP(s) where each type of material is required.

d. Maintenance Level and Degree - provides the lowest degree of intermediate maintenance at which a particular material will be required while using this manual. Refer to WP 002 00 for explanation of maintenance allocation usage.

4. Materials listed in this WP shall only be used when specifically instructed in the applicable maintenance WP. Materials shall not be used for any purpose other than intended function.

Materials

Specification No./ Part No.	Nomenclature	WP Number	Maintenance Level and Degree
---	Dye, Layout Dykem	049 00	
---	Paint, Aluminum (Polythem)	039 00	
---	Rouge, Jewelers	039 00	
A (Armstrong)	Catalyst, epoxy resin mix (activator)	072 00	I-2
A-A-1206	Cloth, abrasive (crocus)	014 00, 039 00, 040 00, 048 00, 092 00	I-2
A-A-59503, type 1, grade A or B, class 1	Nitrogen,technocal, dry	019 00	I-3
Actithane H251	Thinner, paint	048 00	I-3
A2 (Armstrong)	Adhesive, epoxy resin mix	072 00	I-2
AMS-M-3171, Type VI (DOW 19)	Solution, chromic pickling, brush-on	013 00, 039 00	I-2
AMS 4190	Rod, welding (aluminum)	026 00	I-3
AMS 5782	Rod, welding	048 00, 054 00	I-2
AMS 5784	Rod, welding	048 00, 054 00	I-2
AMS 5832	Rod, welding	054 00	I-2
AN123029	Gasket, aluminum fiber	037 00, 040 00, 074 00	I-3
AN123033	Gasket, aluminum fiber	037 00, 040 00	I-3
AN381-3-10	Pin, cotter	027 00	I-3
AN763-20	Gasket	049 00	I-3
AS3084-04	Packing, preformed	019 00, 037 00, 091 00	I-3
AS3084-07	Packing, preformed	029 00	I-3
AS3084-08	Packing, preformed	037 00	I-3
AS3084-10	Packing, preformed	064 00	I-3
AS3084-12	Packing, preformed	049 00, 076 00	I-3

Materials

Specification No./ Part No.	Nomenclature	WP Number	Maintenance Level and Degree
AS3085-006	Packing, preformed	023 00, 070 00, 094 00	I-3
AS3085-008	Packing, preformed	040 00	I-2
AS3085-010	Packing, preformed	036 00, 044 00, 049 00, 094 00	I-3
AS3085-011	Packing, preformed	044 00, 056 00	I-3
AS3085-014	Packing, preformed	044 00	I-3
AS3085-015	Packing, preformed	049 00, 074 00	I-2
AS3085-016	Packing, preformed	037 00, 040 00, 074 00	I-3
AS3085-027	Packing, preformed	064 00	
AS3085-028	Packing, preformed	078 00, 093 00	I-3
AS3085-112	Packing, preformed	030 00	I-3
AS3085-113	Packing, preformed	039 00, 070 00, 071 00	I-3
AS3085-114	Packing, preformed	029 00, 036 00, 040 00	I-2
AS3085-118	Packing, preformed	019 00, 029 00, 044 00, 073 00, 075 00	I-3
AS3085-119	Packing, preformed	044 00, 075 00	I-3
AS3085-120	Packing, preformed	040 00, 070 00	I-3
AS3085-122	Packing, preformed	032 00, 037 00, 040 00, 077 00	I-3
AS3085-129	Packing, preformed	040 00	I-2
AS3085-131	Packing, preformed	040 00, 070 00	I-3
AS3085-161	Packing, preformed	049 00	I-2
AS3085-162	Packing, preformed	049 00	I-2
AS3085-215	Packing, preformed	080 00	I-3
AS3085-231	Packing, preformed	070 00, 071 00, 077 00	I-3
AS3085-235	Packing, preformed	035 00	I-3
AS3085-262	Packing, preformed	034 00	I-3
AS3208-06	Packing, preformed	026 00, 037 00, 049 00, 078 00, 094 00	I-3
AS3209-130	Packing, preformed	027 00	I-3
AS3209-224	Seal, O-ring	027 00, 028 00, 040 00, 049 00	I-3
AS3209-252	Packing, preformed	027 00, 028 00, 049 00	I-3
AS3209-255	Packing, preformed	028 00	I-3
AWS A5.14	Rod, welding	051 00, 054 00	I-2
AWS A5.9	Rod, welding	054 00	I-2
B&B 3100	Cleaner, engine, water wash	025 00	I-3
BB-C-104	Ice, Dry (Solid Carbon Dioxide)	040 00	
DOD-L-25681	Oil, Lubricating, Dry Film (Molybedenum Disulfide)	040 00, 055 00, 094 00	
EC-776	Sealant	049 00	I-3
Envirosolv CRX-2-5313	Solvent, Dry Cleaning	013 00	
H-B-178	Brush, brass wire or heavy fiber	048 00, 050 00, 057 00	I-1
Isoprep	Metal cleaner, silicate soap	013 00, 043 00, 058 00	I-3
KW11486	Spring, Garter	079 00	

Materials

Specification No./ Part No.	Nomenclature	WP Number	Maintenance Level and Degree
KW13608	Boot, Seal	079 00	
LP-3	Flexibilizer, epoxy resin mix	072 00	I-2
M83248/1-121	Packing, performed, O-ring	077 00	
MIL-A-46106	Sealant, Silicone, Adhesive (RTV)	026 00	
MIL-A-4864	Wool, aluminum	048 00	I-1
MIL-A-6091	Alcoho, Denatured Ethyl	046 00	
MIL-A-907	Compound, anti-seize	030 00, 055 00, 092 00	I-3
MIL-B-121	Barrier material, greaseproof medium duty grade A, type II	019 00	I-3
MIL-B-23958, Type I	Brush, cleaning	068 00	
MIL-B-43871	Brush, soft bristle, cleaning	090 00	I-3
MIL-C-16173, grade 1	Compound corrosion preventive, solvent cutback, cold application, hard film	019 00	I-3
MIL-C-16173, grade 2	Compound, corrosion preventive, soft film	019 00	I-3
MIL-C-24671	Cloth, Lint-free	023 00	
MIL-C-25107	Compound, carbon removing	013 00	I-3
MIL-C-5541, class 1A	Coating, chemical conversion	026 00, 048 00, 089 00	I-3
MIL-C-5546	Solvent, cleaning, steel	043 00	I-3
MIL-C-6529, type I	Compound, rust preventive	013 00, 043 00	I-3
MIL-C-85043	Cloth, cleaning, low-lint	013 00, 039 00, 057 00, 069 00, 079 00, 080 00, 082 00, 083 00, 084 00, 086 00, 087 00, 094 00	I-3
MIL-D-3464, type I	Desiccant	019 00	I-3
MIL-DTL-81706	Material, conversion coating	013 00, 048 00	I-1
MIL-E-6844, class 6 or 9	Rod, welding	054 00	I-1
MIL-H-83282	Fluid, Hydraulic	025 00	
MIL-L-15719	Compound, anti-seize	068 00	I-3
MIL-PRF-23377	Coating, High Solids Epoxy Primer	013 00, 039 00, 048 00	I-3
MIL-PRF-23827	Grease	016 00, 033 00, 040 00, 044 00, 047 00	I-3
MIL-PRF-81322	Grease	033 00, 034 00, 039 00	I-2
MIL-PRF-85285	Coating, Polyurethane	013 00, 039 00, 048 00	I-3
MIL-PRF-85582	Primer Coating, Epoxy, Waterborne	013 00, 048 00	I-3

Materials

Specification No./ Part No.	Nomenclature	WP Number	Maintenance Level and Degree
MIL-PRF-23699	Oil, lubricating	013 00, 014 00, 016 00, 018 00, 019 00, 023 00, 025 00, 027 00, 028 00, 029 00, 030 00, 033 00, 034 00, 035 00, 037 00, 039 00, 040 00, 041 00, 044 00, 049 00, 055 00, 056 00, 058 00, 064 00, 070 00, 071 00, 074 00, 076 00, 077 00, 078 00, 088 00, 090 00	I-3
MIL-PRF-6081, grade 1010	Oil, lubricating	013 00, 019 00, 043 00, 049 00, 058 00, 059 00, 060 00, 061 00, 062 00, 063 00, 064 00, 066 00, 088 00, 091 00, 094 00	I-3
MIL-PRF-680, Type II	Solvent, cleaning	013 00, 014 00, 019 00, 020 00, 025 00, 026 00, 039 00, 041 00, 043 00, 048 00, 050 00, 052 00, 054 00, 056 00, 057 00, 058 00, 059 00, 060 00, 061 00, 062 00, 063 00, 064 00, 065 00, 066 00, 068 00, 070 00, 072 00, 073 00, 074 00, 075 00, 076 00, 078 00, 079 00, 080 00, 082 00, 083 00, 084 00, 086 00, 087 00, 088 00, 089 00, 090 00, 091 00, 092 00, 093 00, 094 00	I-3
MIL-R-3043	Coating, resin, thermosetting	039 00, 052 00	I-2
MIL-S-4383	Compound, Sealing (Buna-N)	048 00, 094 00	I-1
MIL-S-46163	Compound, Locking, Thread	049 00	
MIL-S-8660	Compound, Silicone sealant	049 00	I-3
MIL-S-8802, class A-1/2	Compound, sealing, elastomeric	048 00	I-1
MIL-T-23397	Tape, pressure sensitive, masking	048 00, 094 00	I-1
MIL-T-5624, Grade JP-4 or JP-5	Fuel, aviation	023 00	I-2
MIL-T-81533	Solvent, cleaning, trichloroethane	013 00	I-3
MS20426-AD4-5	Rivet, solid	026 00	I-3
MS20995C20	Lockwire, 0.020 inch	023 00, 027 00, 064 00, 065 00, 073 00, 075 00, 078 00, 081 00, 082 00, 084 00, 086 00, 087 00, 091 00, 094 00	I-3

Materials

Specification No./ Part No.	Nomenclature	WP Number	Maintenance Level and Degree
MS20995C32	Lockwire, 0.032 inch	016 00, 019 00, 020 00, 023 00, 024 00, 025 00, 027 00, 029 00, 030 00, 031 00, 032 00, 034 00, 037 00, 040 00, 044 00, 046 00, 049 00, 055 00, 056 00, 058 00, 059 00, 060 00, 061 00, 062 00, 063 00, 064 00, 065 00, 066 00, 067 00, 068 00, 070 00, 071 00, 072 00, 073 00, 074 00, 075 00, 076 00, 077 00, 078 00, 079 00, 080 00, 084 00, 085 00, 087 00, 090 00, 091 00, 093 00, 094 00	I-3
MS24665	Pin, cotter	027 00	I-3
MS24665-151	Pin, cotter	029 00, 039 00, 040 00	I-2
MS24665-300	Pin, cotter	027 00	I-3
MS29512-06	Packing, preformed	061 00	I-3
MS29513-113	Packing, preformed	061 00	I-3
MS29513-116	Packing, preformed	061 00	I-3
MS29513-246	Packing, preformed	061 00	I-3
MS9015-01	Plug	071 00	
MS9020-04	Seal, O-ring	059 00, 062 00, 064 00, 094 00	I-3
MS9020-06	Seal, O-ring	063 00	I-3
MS9020-08	Seal, O-ring	064 00	I-3
MS9021-112	Packing, preformed	060 00	I-3
MS9021-115	Packing, preformed	059 00	I-3
MS9021-116	Packing, preformed	060 00	I-3
MS9021-213	Seal, O-ring	058 00, 059 00	I-3
MS9021-231	Packing, preformed	059 00	I-3
MS9135-01	Gasket	058 00	I-3
MS9141-05	Gasket, metal O-ring	055 00	I-2
MS9142-019	Gasket, metal O-ring	055 00	I-2
MS9202-015	Gasket, metal O-ring	046 00, 049 00	I-2
MS9202-023	Gasket, metal O-ring	030 00	I-3
MS9204-029	Gasket, metal O-ring	056 00	I-2
MS9204-099	Gasket, metal O-ring	055 00	I-2
MS9205-072	Gasket, metal O-ring	046 00, 049 00	I-2
MS9205-138	Gasket, metal O-ring	055 00	I-2
MS9241-122	Packing, preformed, O-ring	077 00	
MS9320-10	Washer, flat	029 00	I-2
MS9320-11	Washer, flat	029 00	I-2
NS165	Compound, anti-seize (Never Seez)	023 00, 027 00, 030 00, 031 00, 044 00, 046 00, 049 00, 055 00, 056 00, 067 00, 085 00, 089 00, 094 00	I-3
O-C-303	Chromic Acid	013 00	

Materials

Specification No./ Part No.	Nomenclature	WP Number	Maintenance Level and Degree
O–S–576	Sodium bicarbonate	057 00	I–3
Permatex No. 1372W	Compound, sealing	029 00, 034 00, 040 00, 044 00, 049 00, 055 00, 070 00, 076 00, 088 00	I–3
PL32M	Compound, sealing. (Hylomar)	040 00	I–2
PPP–F–636	Carton, fiber board	019 00	I–3
PPP–C–843 type II, class B	Wadding, creped cellulose	019 00	I–3
PPP–T–60	Tape, adhesive, pressure sensitive	019 00	I–3
QQ–S–571	Solder, electronic	057 00	I–3
R–671 (DOW)	Resin, silicone	013 00	I–3
SAE–AMS–M–7866	Molybdenum disulfide, lubricating, technical	016 00, 028 00, 033 00, 046 00, 049 00, 055 00	I–3
TC–100	Compound, cleaning	025 00	
TT–I–735	Isopropyl Alcohol	023 00	
TT–M–261	Methyl ethyl ketone	072 00	I–3
TT–P–1757	Primer, zinc chromate	019 00	I–3
TT–T–291	Solvent, cleaning, mineral spirits	013 00, 037 00, 054 00	I–3
VV–P–216	Oil, penetrating	023 00, 024 00, 068 00, 083 00, 085 00	I–3
VV–P–236	Lubricant, petrolatum	027 00, 049 00, 055 00	I–3
Ultrachem No. 1	Fluid, assembly	055 00	I–3
ZOC–27	Compound, cleaning	025 00	
12100CL8	Seal	090 00	I–3
1383W15P003	Battery, Lithium	090 00	
20305AF	Packing, preformed, O–ring	077 00	I–3
20313AF	Packing, preformed, O–ring	071 00	I–3
20315AF	Packing, preformed, O–ring	077 00	I–3
23001146–3	Gasket	094 00	
23007388	Packing, preformed, O–ring	064 00	I–3
23008227	Gasket	092 00	I–2
23008228	Gasket, aluminum	049 00	I–2
23008235	Gasket, metal	092 00	I–3
23008249	Gasket, metal	064 00, 093 00	I–3
23009249	Nut, Self–locking, Hex, Flanged	023 00, 024 00	
23031075	Gasket	064 00, 093 00, 094 00	I–3
23031720	Spring, helical	076 00	I–3
23039032–3	Gasket, aluminum–parmite	072 00	I–3
23052088	Gasket, Breather Cover	049 00	
23072830	Seal, Borescope Plug, Metallic	023 00, 024 00	
303–10	Tape, fluorolin	026 00	I–3

Materials

Specification No./ Part No.	Nomenclature	WP Number	Maintenance Level and Degree
30558	Compound, Sealing (Loctite)	029 00, 034 00, 040 00, 044 00, 049 00, 055 00, 070 00, 076 00, 088 00	
379–S–15	Packing, preformed, O–ring	064 00	I–3
379–S–17	Packing, preformed, O–ring	064 00	I–3
379–S–24	Packing, preformed, O–ring	064 00	I–3
6724494	Gasket	030 00, 068 00, 085 00	I–3
6739373	Gasket, fuel nozzle	049 00, 067 00	I–2
6739827	Locktab	028 00	I–3
6739831	Gasket	064 00, 093 00	I–2
6781589	Gasket	040 00	I–3
6782828	Gasket	049 00	I–3
6784418–056	Packing, gasket	020 00	
6784419–4	Seal, metal O–ring	019 00, 046 00	I–3
6784592	Gasket	088 00	I–3
6784930–56	Gasket, O–ring	055 00	I–2
6784930–83	Gasket, O–ring	055 00	I–2
6784924	Gasket	040 00, 075 00	I–3
6784937	Washer, key	040 00	I–3
6791532	Shim	027 00	I–3
6805748	Gasket, borescope port	023 00, 024 00	I–3
6808303	Element, filter	061 00	I–3
6816047	Gasket	030 00, 085 00	I–3
6824636	Washer, tab	040 00	I–3
6828954	Bushing, Screw, Flanged	032 00	
6829061	Washer, cup	040 00	I–3
6841232	Spring	074 00	I–3
6843227	Gasket, silastic and fiberglass	080 00	I–3
6843333–118	Packing, preformed, O–ring	020 00	
6843535	Gasket	049 00	I–2
6843618–048	Nut, self locking, 12 pt	056 00	I–2
6844716	Gasket, metal O–ring	056 00	I–2
6844819	Washer, cup	040 00	I–3
6849498	Washer, key	049 00	
6849499	Washer, key	049 00	I–3
6850984	Washer, cup	040 00	I–3
6851489	Seal	033 00	I–3
6862609	Tie, Plastic, Electrical Wire	027 00	
6870042	Gasket	075 00	I–3
6873907	Seal	033 00	I–3
6874912	Seal	033 00	I–3

Materials

Specification No./ Part No.	Nomenclature	WP Number	Maintenance Level and Degree
6875852	Seal	033 00	I–3
6877242–001	Packing, preformed, O–ring	033 00, 040 00	I–3
6877242–002	Packing, preformed, O–ring	064 00	I–3
6877242–004	Packing, preformed, O–ring	049 00	I–3
6877242–006	Packing, preformed, O–ring	049 00	I–3
6877242–007	Packing, preformed, O–ring	058 00	I–3
6877242–008	Packing, preformed, O–ring	034 00	I–3
6892265	Packing, preformed, O–ring	078 00	I–3
6898211	Washer, seal	040 00	I–3
753	Pencil, Silver, Berol Eagle Verithin	031 00	
99–0042–24	Packing, preformed, O–ring	066 00	I–3

INTERMEDIATE MAINTENANCE

DESCRIPTION AND PRINCIPLES OF OPERATION

ENGINE

Reference Material

None

Alphabetical Index

Subject	Page No.
Accessory Drive Assembly	7
Combustion Section	5
Compressor Assembly	5
Engine Specifications	12
General Description	2
Interconnecting Structure	10
Orientation	2
Power Section Description	5
Principles of Operation	2
Propeller Brake	10
Reduction Gear Assembly	7
Safety Coupling	12
Tie Struts	12
Torquemeter Assembly	10
Turbine Assembly	7

Record of Applicable Technical Directives

None

1. **GENERAL DESCRIPTION.**

2. The T56–A–427 Series IV engine is a modern version of the T56 Series III engine. The –427 consists of an axial–flow, internal combustion, gas–turbine power section which is connected to a reduction gear assembly by a torquemeter assembly and two supporting struts. The major engine components are illustrated in Figure 1.

3. The reduction gear assembly has a single propeller output shaft which is offset above the power section centerline. A speed reduction of 12.87:1 at the rated power section speed of 14,239 rpm turns the propeller at 1,106 rpm. The power section consists of the compressor assembly, combustion section assembly, turbine assembly, and accessory drive assembly.

4. The combustion section has six combustion chambers of the through–flow type assembled in a single annular chamber located axially between a fourteen stage axial–flow compressor assembly and a four stage, air–cooled, turbine assembly.

5. The engine operation is controlled by coordinated operation of the fuel, electrical, and propeller control assemblies.

6. **ORIENTATION.**

7. The front of the engine is determined by the power output shaft or the propeller shaft. The top of the engine is identified by the breather located at the front end of the power section. The right and left sides of the engine are determined by looking at the engine from the rear.

8. When viewing the engine from the rear, the combustion liner at the top vertical centerline is the number one liner. The liners are numbered clockwise. (See figure 1.) The two spark igniters are located in the number two and five combustion liners.

9. The direction of the rotation of the turbine, compressor, extension shaft, and the torquemeter is counter–clockwise, as viewed from the rear. The propeller shaft and all accessory drives rotate clockwise, as viewed from the rear of the engine. The compressor and turbine wheel and vane stages are numbered from the front of the engine to the rear.

10. **PRINCIPLES OF OPERATION.**

11. During operation, air enters the power section through the air inlet housing and is compressed through fourteen stages of compression. The compressed air flows through the diffuser into the combustion liners where fuel is introduced and the fuel–air mixture is ignited and burned.

12. The resultant gases exit through the aft ends of the combustion chambers and pass through the turbine where the energy of the gas is extracted and converted into usable kinetic energy to drive the compressor, reduction gear, and propeller. (See figure 2.)

13. From the turbine, the gases travel through an aperture formed by the turbine rear bearing support. Residual energy left in the gas after expansion through the turbine creates thrust which assists in propelling the aircraft forward.

14. The reduction gear assembly converts the high–rpm, low torque energy supplied by the power section to the lower speed and higher torque required for efficient propeller operation. The main reduction gear consists of two stages of reduction. The spur gear first stage has a reduction ratio of 2.97:1. The self–aligning planetary type second gear has a reduction ratio of 4.33:1. This results in an overall reduction of 12.87:1.

15. A characteristic of a turboprop engine is that changes in power are not related to engine speed, but to the turbine measured temperature. During flight, the propeller maintains a constant engine speed. This speed is known as the 100% rated speed of the engine. This is the design speed at which the most power and best overall engine efficiency can be obtained.

16. Power changes in the engine can be effected by changing the fuel flow. An increase in the fuel flow causes an increase in the turbine measured temperature and a corresponding increase to the amount of energy available to the turbine. The turbine will then absorb more energy and transmit it to the propeller in the form of torque. The propeller will then, in order to absorb the increased torque, increase the propeller blade angle thus maintaining a constant engine rpm.

17. Low Speed Ground Idle (LSGI) is a reduced, RPM idle power primarily designed to reduce propeller noise. LSGI RPM is 70.9–72.1% (10,100–10,269 rpm). At this speed the generator will not function and electrical power will be supplied by the 10KVA hydraulic operated emergency generator. TMT will increase due to the reduced airflow through the engine. Reduced oil pressure is expected while operating engine in LSGI mode. If TMT exceeds established limits of 385 – 585°C, operate engine at HSGI for five minutes to stabilize turbine temperatures within specified limits. Down shift engine to LSGI and run at this speed for a minimum of two minutes to reduce combustion section temperatures associated with fuel nozzle coking, and then shutdown engine.

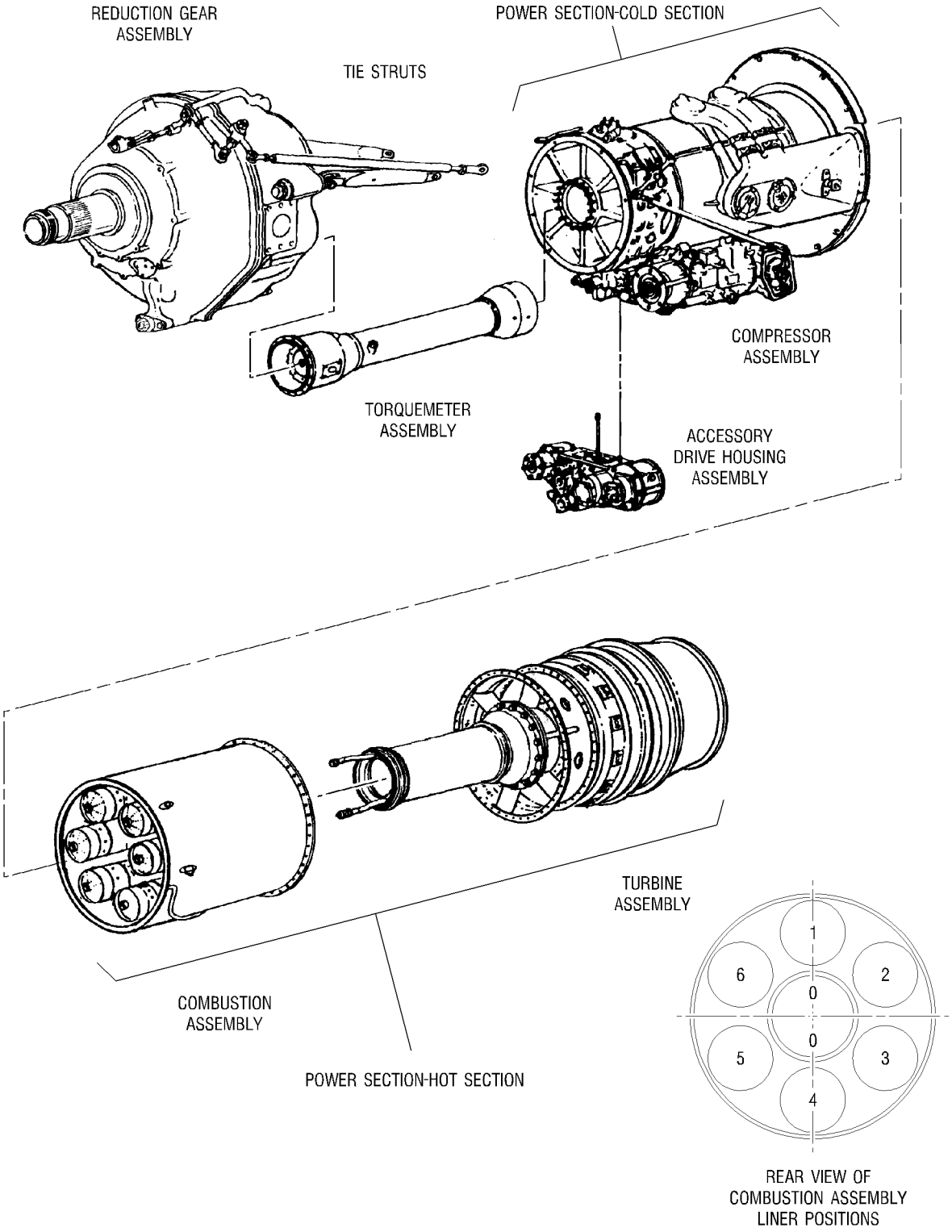

Figure 1. Major Engine Components

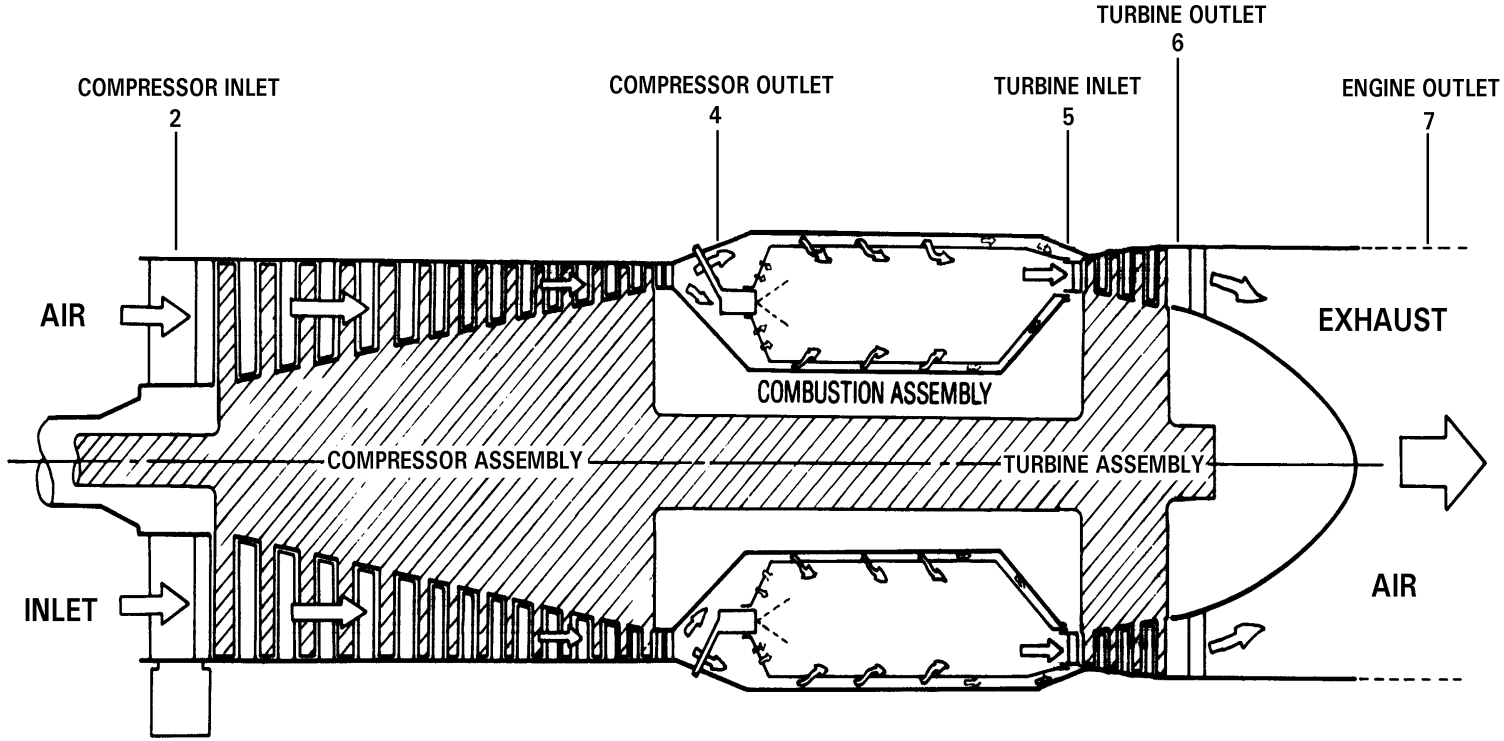

Figure 2. Power Section Airflow Schematic

18. **POWER SECTION DESCRIPTION.**

19. The power section assembly consists of a fourteen stage, axial flow compressor assembly, a six cylindrical through–flow combustion liner assembly, and a four stage turbine assembly. The power section also contains the accessory drive housing, oil, fuel, ignition, control, and cooling air systems.

20. COMPRESSOR ASSEMBLY.

21. The compressor assembly is composed of a compressor inlet housing, compressor rotor, a two piece compressor case, and a diffuser.

22. The air inlet housing is a one piece aluminum casting with eight supporting struts between the center hub and the outer ring. It houses the compressor front bearing, compressor extension shaft, and the necessary bevel gearing required to provide a drive for the accessory drive housing. A mounting pad is provided at the bottom for the accessory drive housing and at the top for the power section breather. An oil to air labyrinth seal is used at the compressor front bearing.

23. The air inlet housing also incorporates anti–icing valves and passages for directing compressor discharge anti–icing air to the strut leading edges, inlet guide vanes, and fuel control pressure sensing probe. The anti–icing air is also directed to the temperature sensing probe, torquemeter housing, and the anti–icing shroud.

24. The steel compressor casing, consisting of two sections, encloses the fourteen wheel rotor and supports the compressor vane assemblies. The vane assemblies are installed in channels and retained by ten through–bolts per stage. The outside of the compressor case is coated with a SerMetel coating.

25. The compressor rotor assembly incorporates interstage labyrinth knife seals and mating vane assemblies to seal with the rotor knives. The knife seal rotor assembly incorporates integral lugs on the blade dovetails to secure the blades in the compressor wheel slots. All the wheels except the first and fourteenth stage are made from Custom 450 material. This material eliminates the need for wheel coatings.

26. Fifth and tenth stage bleeds are located between the blade and vane rows and are configured as a continuous ring. The external bleeds are cast integral with the case to eliminate splitline leakage.

27. The diffuser is of welded steel construction and serves to diffuse the compressor discharge air and to direct it into the combustion chamber. The diffuser supports the compressor rear bearing, compressor rear labyrinth seal outer members, rear bearing jet assembly, and six piloted airblast fuel nozzles.

28. Incorporated into the diffuser are external connections for the anti–icing air supply tubes, air supply line for closing the compressor bleed valves, the combination total temperature/pressure sensor assembly (CDP/CDT probe) and the oil sump vent line. Also included are the scavenge oil line, oil sump, drain cover, lube oil line, and compressor labyrinth seal vent lines. Mounting brackets are provided at the bottom and upper right side of the diffuser. A spray shield baffle is provided at the diffuser rear splitline.

29. COMBUSTION SECTION.

30. The combustion section consists of six individual liners evenly spaced in an annulus formed by the outer and inner casings. The combustion liners are located radially by the fuel nozzles at the front and by the turbine inlet vane assemblies at the rear. Six crossover tubes are located between the liners to transfer the flame from the two diametrically opposed liners which contain the spark igniters to the other four liners during engine starting. The combustion section assembly is illustrated in figure 3.

31. The fuel nozzles are mounted on the diffuser and extend into the center of each liner dome.

32. The combustion section outer casing encloses the combustion liners and serves as a supporting structure between the compressor and turbine. The outer casing is a one piece titanium assembly bolted to the compressor diffuser at the front and to the turbine inlet casing at the rear.

33. Six adapters for two spark igniters and four liner supports are provided at the forward end of the assembly. These provide axial positioning for the combustion liners.

34. To prevent accumulation of unburned fuel in the combustion section, two burner drain valves are provided, one at the front end and one at the rear of the outer casing.

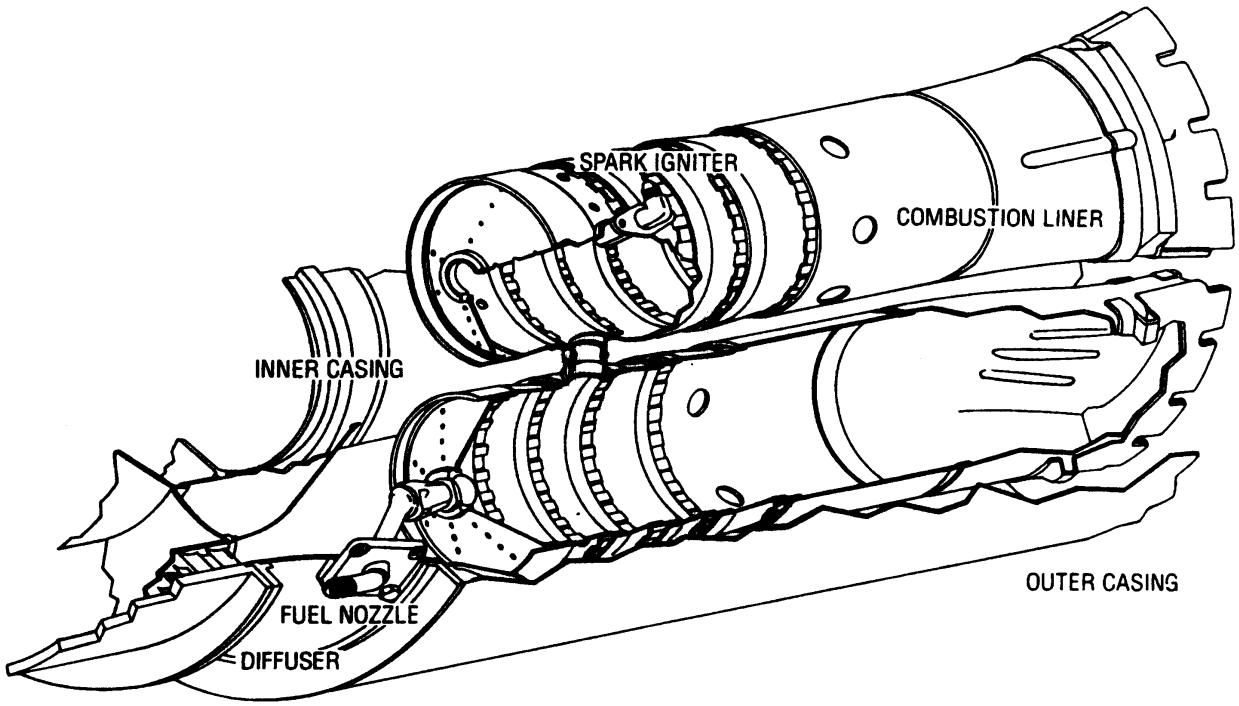

Figure 3. Combustion Section Assembly

35. A small percentage of the air entering the combustion liners mixes with the fuel and is used in combustion. A majority of the remaining air surrounds the combustion liners and enters the liners through cooling louvers and holes to keep the metal temperatures down. This cooling air is also directed through holes in the turbine inlet casing to provide cooling air to the first and second stage turbine wheel, the first stage blades and vanes, and second stage vanes.

36. TURBINE ASSEMBLY.

37. The turbine assembly consists of the turbine inlet casing and the front bearing support, turbine rotor, turbine vane casing, turbine vane assemblies, and turbine rear bearing support.

38. The combustion section inner casing and liner is also part of the turbine unit assembly. The combustion section inner casing consists of an inner and outer liner which are separated by an airspace. Both liners incorporate bellows type expansion joints to allow for expansion, contraction, and misalignment. The forward end of the outer liner is supported by a sleeve in the diffuser. The aft end of the outer liner is bolted to the turbine inlet casing. This arrangement allows for differential expansion between the combustion section inner and outer casings.

39. The front bearing support houses the turbine front bearing, combustion chamber inner casing liner, and the oil jet fitting.

40. The turbine vane casing is bolted to the turbine inlet casing which is bolted to the combustion section outer casing. The turbine rotor assembly consists of four wheels supported by roller bearings at each end.

41. A face type spline (curvic spline) between the wheels serves to position the wheels and transfer torque from one wheel to another. The wheels are stacked and held together by eight through bolts. A turbine spacer disk is between each adjacent turbine wheel. The disks are held in close proximity to the inner rings of the turbine vane assembly, and function as axial containers for the blades and also as a labyrinth seal to minimize gas leakage between turbine stages.

42. The functions of a conventional turbine rotor shaft are performed by the stacked curvic splines and for this reason it is called a curvic coupling rotor.

43. The turbine rotor is encased in the one piece turbine casing assembly which contains the stator vane assemblies. The casing assembly is bolted to the turbine inlet casing at the front and the turbine rear bearing support at the rear. The rear turbine bearing support assembly houses the turbine rear bearing and provides a flange for mounting the turbine scavenge oil pump support and sump, and the rear turbine labyrinth seal. In addition, the turbine rear bearing support assembly includes the outlet duct for the turbine rotor exhaust gases.

44. The turbine scavenge oil pump is located at the rear end of the turbine rear bearing support and scavenges oil which gathers in the rear turbine area.

45. The first two stages of vanes and first stage blades are air cooled. The delivery system to each blade and vane row is separated to eliminate interaction effects and is sealed against leakage of cooling air.

46. Honeycomb seals are utilized on the aft three stages of blade tracks to allow close running blade tip clearances, therefore reducing tip leakage. The first stage blade track is ceramic to reduce wear with the higher inlet temperatures. Free ring mounted honeycomb seals are used beneath the vane rows and enable very close running clearances to minimize leakage.

47. The turbine inlet casing is attached at its forward end to the outer and inner combustion casings. It is designed to locate and house the forward turbine bearing (roller), the seal assembly, front turbine bearing oil jet, and the 1st stage turbine vane assemblies. The casing is divided into six equal passages by six radial struts and contains six borescope ports for engine inspection.

48. **ACCESSORY DRIVE ASSEMBLY.**

49. A magnesium alloy accessory drive housing is mounted on the bottom of the compressor air inlet housing. It provides mounting pads on the rear face of the housing for the fuel pump, external scavenge oil pump, and the fuel control. Mounting pad for the speed sensitive valve, main oil pump, and oil filter are located on the front face of the housing. The accessories are driven from the compressor extension shaft by the gears and shafting in the accessory drive housing and the compressor air inlet housing.

50. **REDUCTION GEAR ASSEMBLY.**

51. The reduction gear assembly has four magnesium alloy castings that provide the structural support for the two stages of reduction gearing and the accessory drive gear train. These structural members are the front

housing, main diaphragm, rear housing, and the rear housing inner diaphragm. (See figure 4.)

52. The rear housing provides the front attachment for the torquemeter housing. Within the torquemeter housing is the torquemeter shaft assembly, which transmits power section torque to the pinion input gear.

53. Two eyebolts on either side of the rear housing provide attachment for two tie struts that connect the reduction gear assembly to the air inlet housing on the power section. These tie struts, along with the torquemeter housing, provide the rigidity required to maintain the proper alignment between the power section and the reduction gear assembly. On each side of the rear housing are mounting pads. Engine mounts, connected to these pads, provide part of the support for the engine within the airframe nacelle.

54. The rear housing inner diaphragm, secured to the interior of the rear housing, along with the rear housing, provide the structural support for the accessory drive gear train. The accessory drive gear, integral to the pinion gear assembly, provides the drive for the accessory drive gear train. Aircraft accessories mounted on the aft face of the rear housing are driven by this accessory drive gear train. These accessories include the alternator, two hydraulic pumps, and the tachometer generator. The starter and the engine oil pump also mount on the aft face of the rear housing.

55. The propeller brake is located in the accessory drive gear train. During ground starts, starter torque is transmitted through the propeller brake assembly to the accessory drive gear. During all other operations, the torque required to drive the accessory drive gear train is transmitted from the accessory drive gear through the propeller brake assembly.

56. The pinion gear assembly, supported by bearings in the rear housing and main diaphragm, drives the main drive gear. These two spur gears provide the first stage reduction of 2.97:1. The main drive gear is positioned and supported by the main drive gear bearing located on the shaft portion of the rear planet carrier.

57. The sun gear flange is bolted to the main drive gear. The reduced rpm of the first stage reduction is delivered to the second stage by the sun gear flange, sun gear hub, and the sun gear. The sun gear meshes with five planet gears, which in turn mesh with the ring gear that surrounds them. The planet gears are supported by the planet carrier and the propeller shaft. The ring gear does not rotate. As the planet gears are rotated by the sun gear, they cause the propeller shaft and rear planet carrier to rotate. This planetary gear train provides a speed reduction of 4.33:1.

58. At design speed (100%), power section rotor rpm is 14,239 and propeller shaft rpm is 1,106. The rear carrier is supported by a bearing housed in the bearing diaphragm. The two bearings on the propeller shaft are housed in the front case. One of these is a roller bearing that radially supports the propeller shaft; the other is a ball bearing that axially retains the propeller shaft in the reduction gear assembly.

59. A negative torque signal (NTS) system and a thrust sensitive signal (TSS) system are incorporated in the front housing. When a negative 230 to 320 shaft horsepower is applied to the propeller shaft, the NTS system signals the propeller to increase the blade angle as required to limit the negative shaft horsepower. The TSS system will signal the propeller to feather, if the system is armed, when propeller thrust drops below a positive 500 pounds.

60. The ring gear can move fore and aft 0.250 inch. Fourteen chambers within the front housing contain the NTS springs and plungers. Two of these cylinders contain actuator rods. The springs are used to load the ring gear assembly in its maximum aft position. When negative torque is transmitted a helical spline action tends to move the ring gear assembly forward. If negative torque exceeds 230 to 320 horsepower, the ring gear moves forward to extend the actuator rod further out of the front housing. The upper right actuator rod is used to signal the propeller negative torque signal system that negative torque has exceeded the NTS setting.

61. Two (Belleville) spring tension washers, located between the outer races of the roller and ball bearings on the propeller shaft, spring load the propeller shaft to its full aft position. When propeller thrust exceeds positive 500 pounds, the TSS springs are flattened and the propeller shaft moves forward 0.100 inch. The TSS switch mounted on the front case is positioned either open or closed, depending on propeller thrust. The switch is “armed” and if an engine failure occurs during takeoff, the propeller will be signalled to feather when the propeller thrust drops below positive 500 pounds.

62. An accessory drive gear, integral to the pinion gear assembly, is used to transfer the engine torque required by the accessory drive gear train to the propeller brake outer member. The starter gear, splined and retained to the propeller brake outer member, transfers torque to the accessory idler gear, which drives the accessory drive gear train.

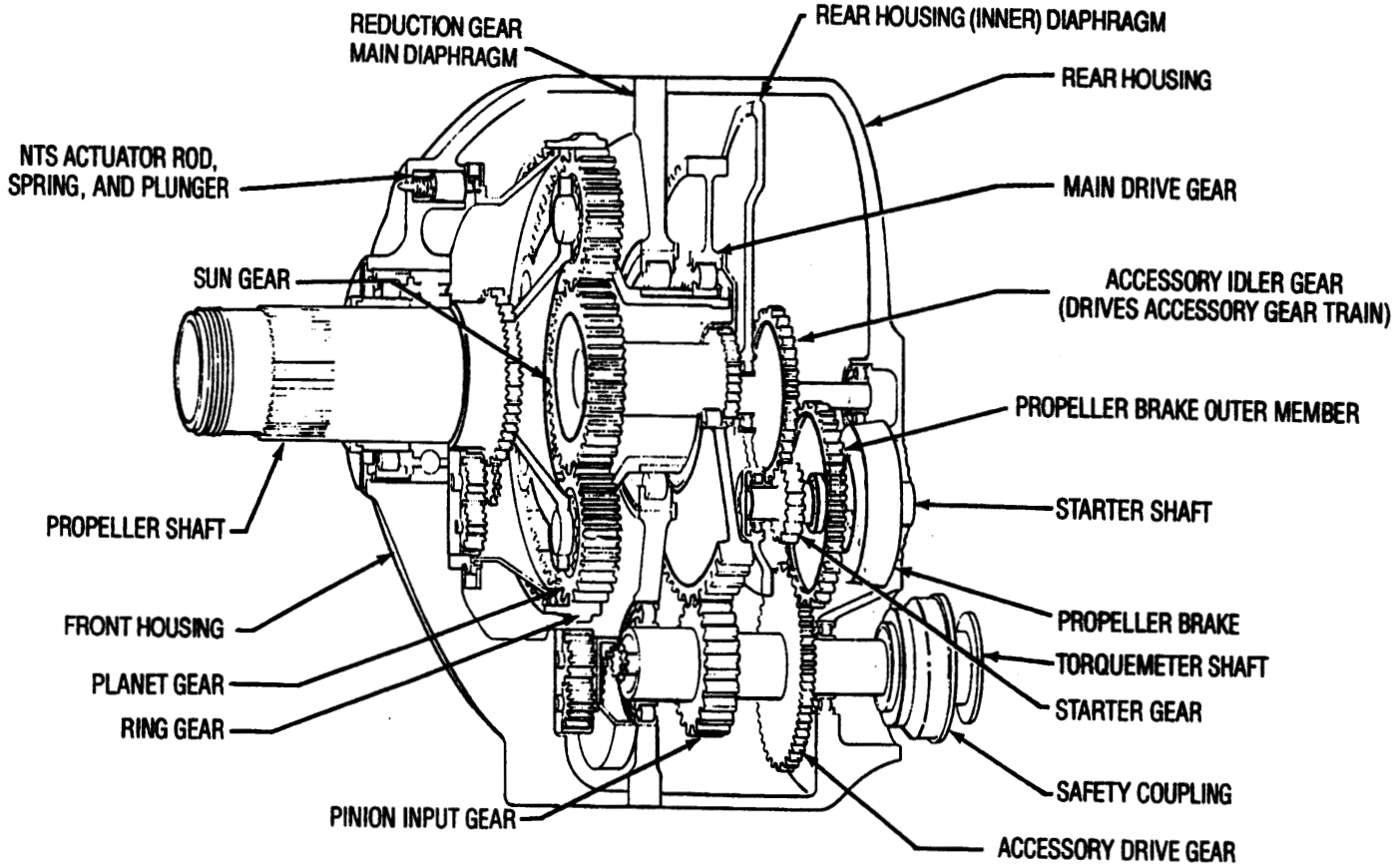

Figure 4. Reduction Gear Diagram

63. The accessory drive gears are supported by the rear housing and the rear housing inner diaphragm. The accessory drive gear train is driven by the main accessory drive gear, which is machined on the pinion shaft.

64. The lubricating system of the reduction gear assembly is independent of the power section lubrication system. However, both of these lubrication systems utilize a common aircraft oil supply system. The lubrication system of the reduction gear assembly provides for the lubrication of the gears and bearings of the first and second stages of reduction gearing, and supplies the oil required for the propeller brake assembly. The gears and bearings of the accessory drive gear train are lubricated by the oil mist that results from oil being thrown off the rotating reduction gears. The oil is scavenged from the reduction gear assembly by a nose scavenge pump and a main scavenge pump located in the front case.

65. A pump drive gear, mounted on the propeller shaft behind the bearings, drives the nose scavenge pump. This pump picks up oil from the bottom of the front case. The main scavenge pump, secured within the front case, is driven by a gear on the forward end of the pinion input gear. The oil scavenged in the reduction assembly is directed to the scavenge oil outlet fitting near the bottom of the rear housing. Oil delivered to the scavenge oil outlet fitting flows through a screen type filter with a magnetic plug (chip detector) at one end. Residual oil in the reduction gear assembly can be drained by the removal of the plug in the bottom of the front housing.

66. PROPELLER BRAKE.

67. The propeller brake is designed to prevent the propeller from windmilling when it is feathered in flight, and to decrease the time for the propeller to come to a complete stop after engine shutdown.

68. The propeller brake is of the friction or cone type, consisting of a stationary inner member and a rotating outer member which, when locked, acts upon the primary stage reduction gearing.

69. During normal engine operation, reduction gear oil pressure holds the brake in the released position. This is accomplished by oil pressure which holds the outer member away from the inner member. When the propeller is feathered or at engine shutdown, as reduction gear oil pressure drops off, the effective hydraulic force decreases and a spring force moves the outer member into contact with the inner member.

70. **INTERCONNECTING STRUCTURE.**

71. The power section drives the reduction gear assembly through an extension shaft and torquemeter assembly. The reduction gear assembly is secured to the power section by the torquemeter housing serving as the bottom support and a pair of tie struts serving as the top support.

72. **TORQUEMETER ASSEMBLY.**

73. The torquemeter assembly (figure 5) provides a means of transmitting and measuring the torque produced by the power section. The torquemeter pickup assembly contains four magnetic pole pieces to provide separate torque signals to the supervisory Digital Electronic Trim Control (DETC), and the cockpit horsepower indicator.

74. The torquemeter housing is the primary supporting structure between the power section and the reduction gear assembly. Two tie struts, between the power section and the reduction gear assembly, provide the necessary rigidity to maintain the alignment established by the torquemeter housing. The torquemeter housing also provides the mounting point for the torquemeter magnetic pickup assembly, the torquemeter mid–bearing outer race, and bearing lock tube. An anti–icing shroud surrounds the torquemeter housing.

75. The torquemeter shaft assembly, the rotating portion of the torquemeter system, includes two concentric shafts, sleeve bearings, and the engine to torquemeter coupling. The solid steel torquemeter inner shaft (torque shaft) carries the torsional load and is bolted to the safety coupling at the forward end and splined into the compressor extension shaft at the aft end by the outer shaft locating key. An external threaded plug retains the outer shaft and the engine to torquemeter coupling on the inner shaft. An internal retaining ring locks the external threaded plug to the inner shaft. Concentricity between the two shafts is maintained by the center and front sleeve bearings. Both shafts rotate as a unit.

76. The mid–bearing prevents the torquemeter shaft assembly from whipping. The outside diameter of the mid–bearing outer race has longitudinal grooves that permit oil to flow from one side of the bearing to the other. Oil delivered to the torquemeter for lubricating purposes can drain into the reduction gear assembly or power section. Oil delivered to the reduction gear assembly can be vented through the torquemeter to the power section. The bearing lock tube and mid–bearing outer race have interlocking tangs and are retained together by an internal retaining ring. The tube locating key positions the bearing lock tube and prevents it and the mid–bearing outer race from rotating. An internal retaining ring holds the bearing lock tube in the torquemeter housing.

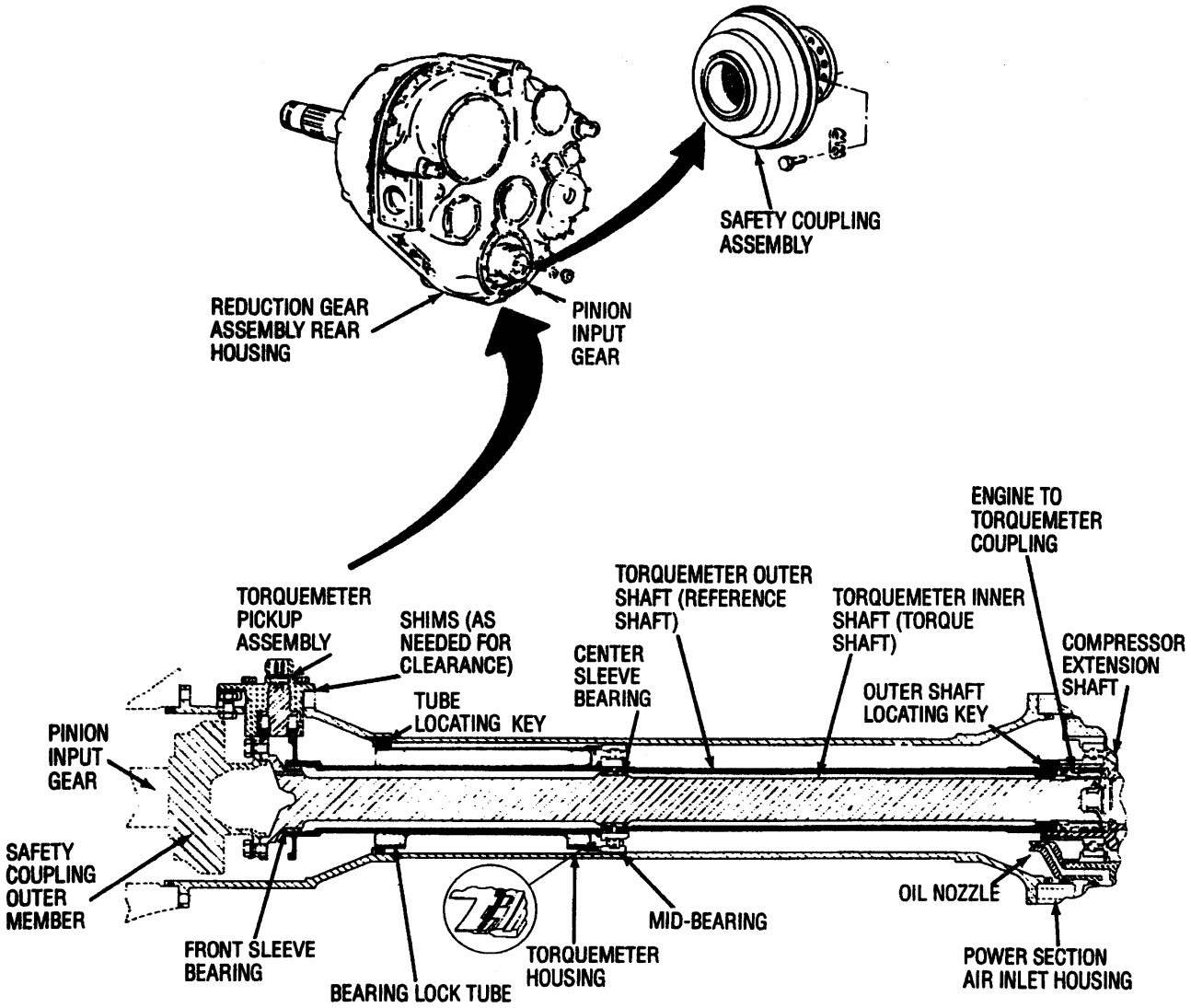

Figure 5. Torquemeter Assembly

77. The forward end of each shaft is flanged. Forty equally spaced rectangular exciter teeth are machined on each flange. As the amount of torque transmitted increases, the torsional deflection (twisting) of the inner shaft (torque shaft) causes a displacement between the exciter teeth of the two flanges. The displacement is detected by electromagnetic pickups mounted in the torquemeter housing.

78. The torquemeter pickup assembly contains two pairs of identical pickups. For each pair, one pickup is located over the torquemeter inner shaft flange and the other pickup is located over the torquemeter outer shaft (reference shaft) flange. When torque is transmitted, the torque shaft twists, displacing the teeth on the torque flange with respect to the teeth on the reference shaft flange. This displacement causes a change in the phase angle displacement between impulses produced at the magnetic pickup mounted over the flanges. A second pair of magnetic pickups provide torque and RPM signals to the DETC.

79. The cockpit horsepower indicator serves to measure this displacement. The rear face of the indicator has two potentiometers that are used to adjust and calibrate the torquemeter electrical components with the torquemeter shaft assembly. The Handheld Maintenance Terminal (HMT) reads the torque signal corrected for rpm and displays actual horsepower.

80. SAFETY COUPLING.

81. A safety coupling (figure 6) is provided to disengage the reduction gear from the power section in the event the power section is operating above the preset negative torque value which is greater than that required to actuate the NTS.

82. The coupling consists of an inner member splined to the pinion shaft, an outer member bolted to the extension shaft, and an intermediate member connected to the inner member through helical teeth and to the outer member through straight teeth.

83. The reaction of the helical teeth tends to move the intermediate member forward and to mesh when positive torque is applied, and rearward and out of mesh when negative torque is applied. When the predetermined negative torque is exceeded, the coupling members disengage automatically. Re–engagement of the safety coupling is automatic during feathering or power section shutdown. The safety coupling is functional in the event of a negative torque in excess of 6,000 pound–inches.

84. **TIE STRUTS.**

85. Two tie struts (figure 7) assist in carrying the overhanging moments and forces produced by the propeller and reduction gear. The front ends of the struts have eccentric pins which are splined for locking. These pins are used to adjust the length of the strut in order to compensate for the manufacturing tolerances on the length of the drive shaft housing and interconnecting parts.

86. **ENGINE SPECIFICATIONS.**

87. Refer to table 1 for engine specifications.

Table 1. Engine Specifications

	T56–A–427
Engine weight less aircraft–mounted controls	1940 lb
Aircraft–mounted engine controls weight	21 lb
Maximum length at room temperature	145.878 in
Maximum width at room temperature	29.442 in
Maximum height at room temperature	41.844 in
Rated engine power	*5250 hp
Maximum SFC at sea level	0.473 lb/ESHP/hr
Maximum oil consumption	0.35 gal/hr
Engine lubricating oil	MIL–L–23699
Fuel	MIL–T–5624 (JP–4 or JP–5)
*Torque limiting in effect	

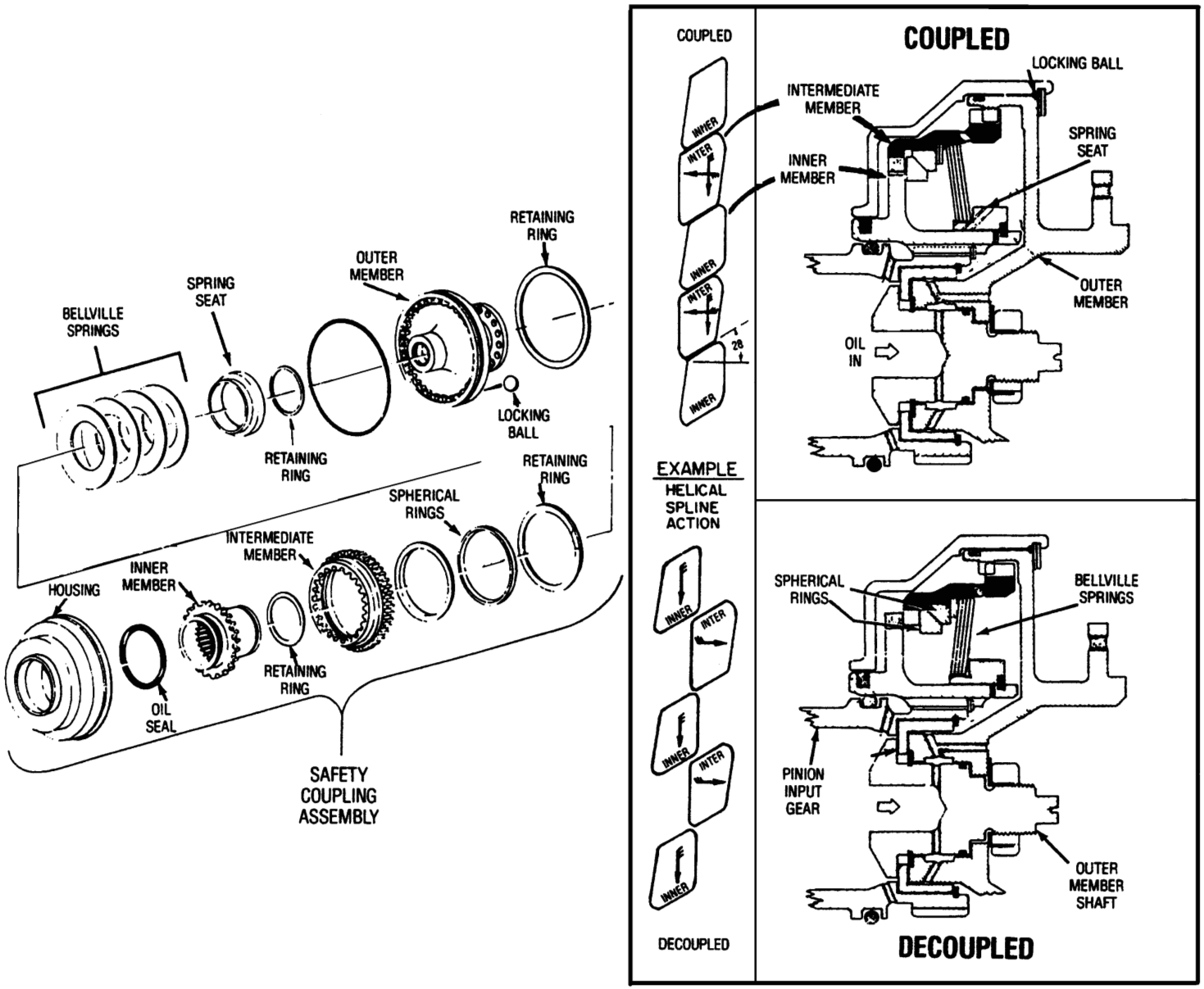

Figure 6. Safety Coupling Schematic

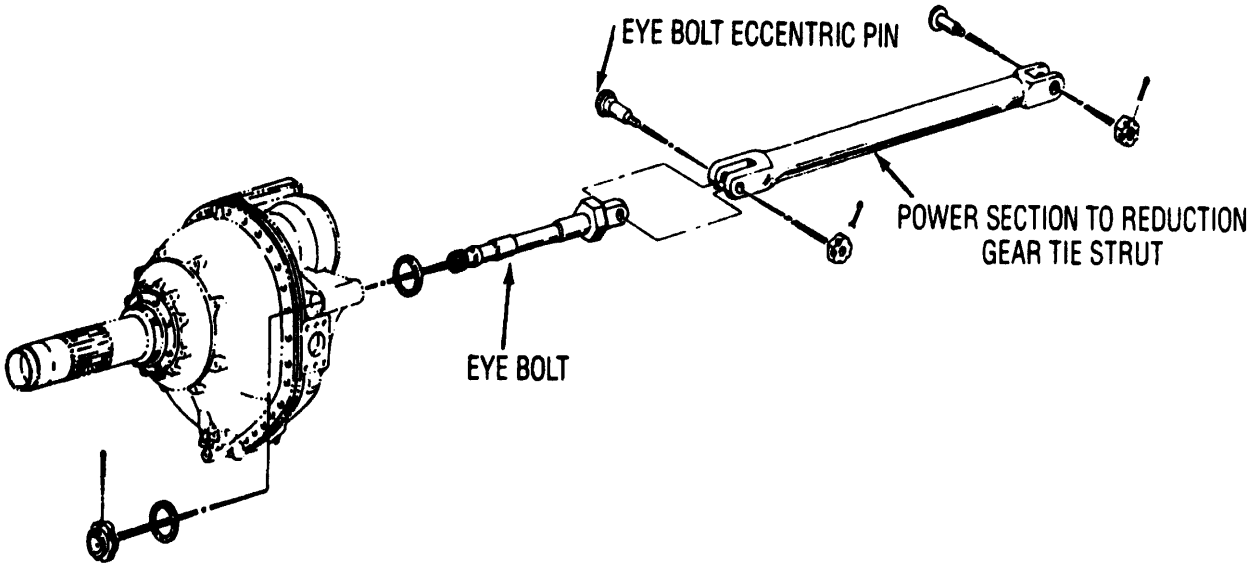

Figure 7. Reduction Gear Tie Struts

INTERMEDIATE MAINTENANCE

DESCRIPTION AND PRINCIPLES OF OPERATION

FUEL SYSTEM AND CONTROL SYSTEM

Reference Material

None

Alphabetical Index

Subject Page No.

Combustion Chamber Drain Valves 10
Compressor Inlet Pressure Measurement 10
Compressor Inlet Temperature Measurement 10
Control System Operation 2
Coordinator 10
Digital Electronic Trim Control 7
Engine Advisory/Caution Annunciation 10
Exhaust Pressure Measurement 10
Fuel System 2
    Electrical Fuel Cutoff Actuator 7
    Fuel Control 2
    Fuel Pump 7
    Fuel Trim Valve 6
    Power Lever Rate Servo 7
High Pressure Fuel Filter Assemblies 7
Low Pressure Fuel Filter Assemblies 7
Low Speed Ground Idle Switch 11
Power Lever and Condition Lever 10
Propeller Control Linkage 11
Speed Sensitive Valve 11
Torque and Speed Measurement System 8
Turbine Temperature Measurement System 8

Record of Applicable Technical Directives

None

1. **CONTROL SYSTEM OPERATION.**

2. The engine control system will accomplish the start sequencing with controlled fuel flow for engine light–off and acceleration to stabilized starting rpm.

3. The control system limits and controls the engine horsepower and limits the turbine temperature during steady state and transient operations at all ambient conditions.

4. The control system limits the rate of fuel flow change during a period of rapid (> 20 degrees/sec) power lever movements. The system will also provide a means to completely stop fuel flow to the engine and purge the nozzles and manifolds of fuel at shutdown. The system will also limit the maximum possible fuel flow.

5. The control system will provide the mechanical overspeed protection for the engine at all times as well as electronic overspeed and underspeed protection during electronically trimmed operations. The fuel flow will also be controlled in maximum reverse operation.

6. The control system modulates fuel flow to match a horsepower schedule that varies linearly with Power Lever Angle (PLA). This schedule is illustrated in Figure 1. During ground operations with the PLA below 30 degrees, fuel flow is scheduled by the fuel control. In flight, within the PLA range of 34 degrees to 90 degrees (flight idle to maximum), a linear schedule is followed as the power lever is moved.

7. As ambient conditions, bleed air requirements and airspeed increase, maximum turbine temperature may be achieved before maximum horsepower is encountered. This results in a reduction in the maximum horsepower available at 90 degrees PLA. The lower horsepower point at flight idle, nominally set to 250 hp, will also vary slightly with ambient conditions and airspeed.

8. The linear horsepower schedule will be computed using torque, rpm, Compressor Inlet Pressure (CIP), Compressor Inlet Temperature (CIT) and turbine outlet static pressure (PS7). (See figure 2.) The lower horsepower limit is always 250 Indicated Shaft Horsepower (ISHP). The upper limit varies according to the inlet conditions. The PLA will proportionally schedule horsepower from 250 ISHP at 34° PLA to maximum horsepower (for inlet conditions) at 90° PLA.

9. A fuel flow limiter is incorporated in the fuel system between the fuel control and the flow meter. The flow limiter bypasses fuel to the inlet of the secondary fuel pump. This passive safety device limits fuel flow to 2500 pph to help prevent an engine overtorque during a cold day reversion to hydromechanical fuel control operation at the takeoff power setting.

10. The hydromechanical control has a basic input from the power lever to set fuel flow. This is added to or subtracted from by inputs from inlet temperature, inlet pressure and rpm. The inlet temperature changes the volume in an alcohol filled tube that adjusts the schedule. The inlet pressure changes adjust an aneroid bellows that similarly affects the basic schedule. Flyweights provide an rpm input to adjust the fuel cam during start and a governor set of weights provides limiting during overspeed operation.

11. The Digital Electronic Trim Control (DETC) is a supervising system that trims the fuel schedule provided by the hydromechanical control. A trim valve is actuated by the DETC to put or take fuel from the basic schedule. This is accomplished by commands sent to the trim valve by the DETC. These commands provide for horsepower controlling. (See figure 3.)

12. **FUEL SYSTEM.**

13. FUEL CONTROL. The fuel control is mounted on the accessory gearbox, and is mechanically linked to the coordinator. The fuel control provides a means of varying the fuel flow in order to permit a selection of power that is coordinated with propeller blade angle and engine speed. The fuel control will regulate the rate of change in the fuel metering during acceleration and deceleration. Engine and propeller speed outside the limits of operation of the propeller governor are also controlled. This includes reverse thrust, flight idle, and ground idle. The fuel system is illustrated in figure 4.

14. The fuel control will provide a measure of engine protection during overspeed conditions by reducing the fuel flow and turbine temperature. It will provide a starting fuel flow schedule which avoids overtemperature and compressor surge. The fuel control will compensate for changes in air density due to variations in compressor inlet temperature and pressure. A means of cutting the fuel flow off electrically and mechanically is provided by the fuel control. The fuel control will allow running at either high or low speed ground idle via a switch in the cockpit.

15. The fuel control has input for compressor inlet pressure, compressor inlet temperature, engine speed, and power lever angle. Using these factors the fuel control meters the proper amount of fuel throughout the range of engine operation.

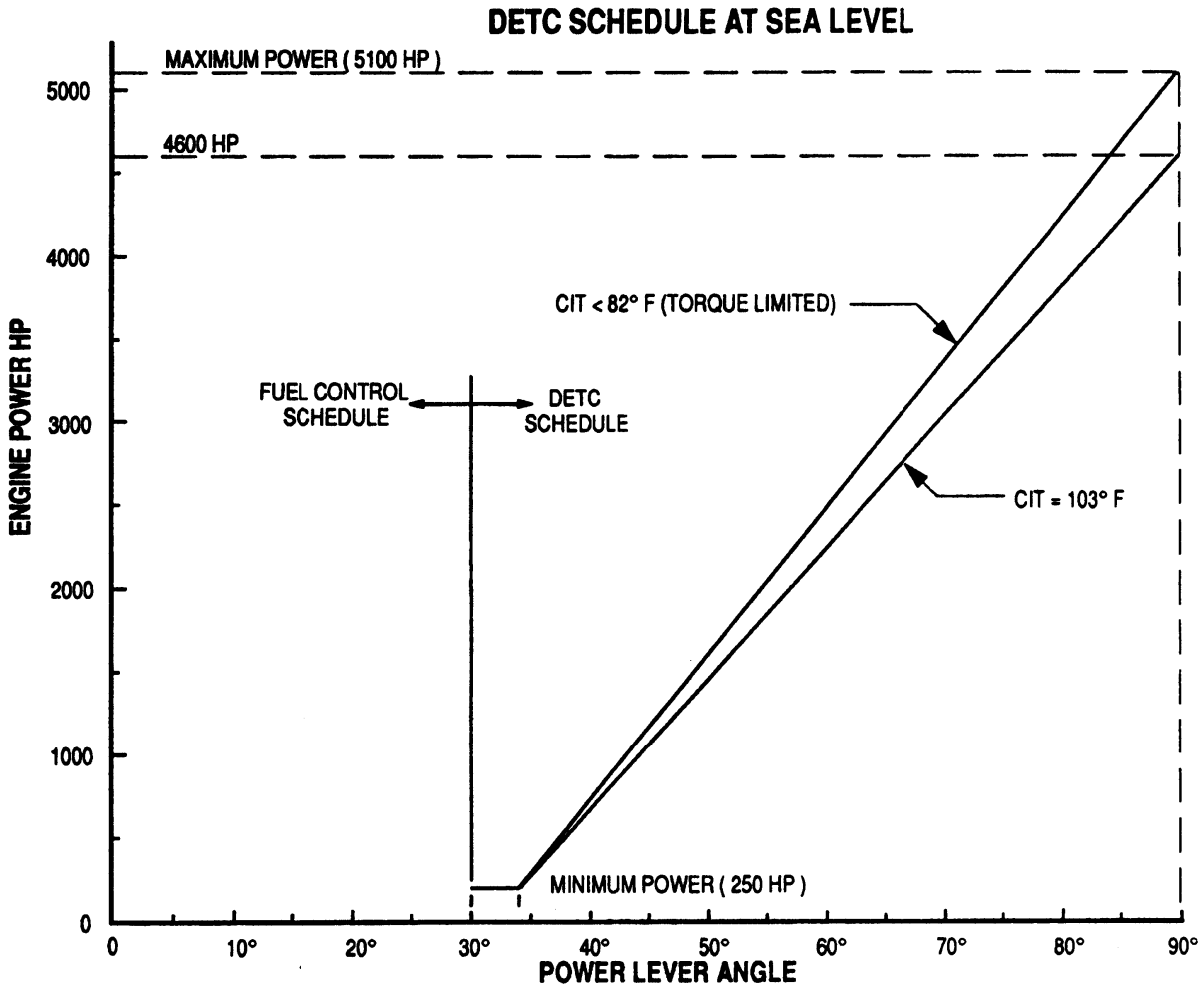

Figure 1. Control Schedule

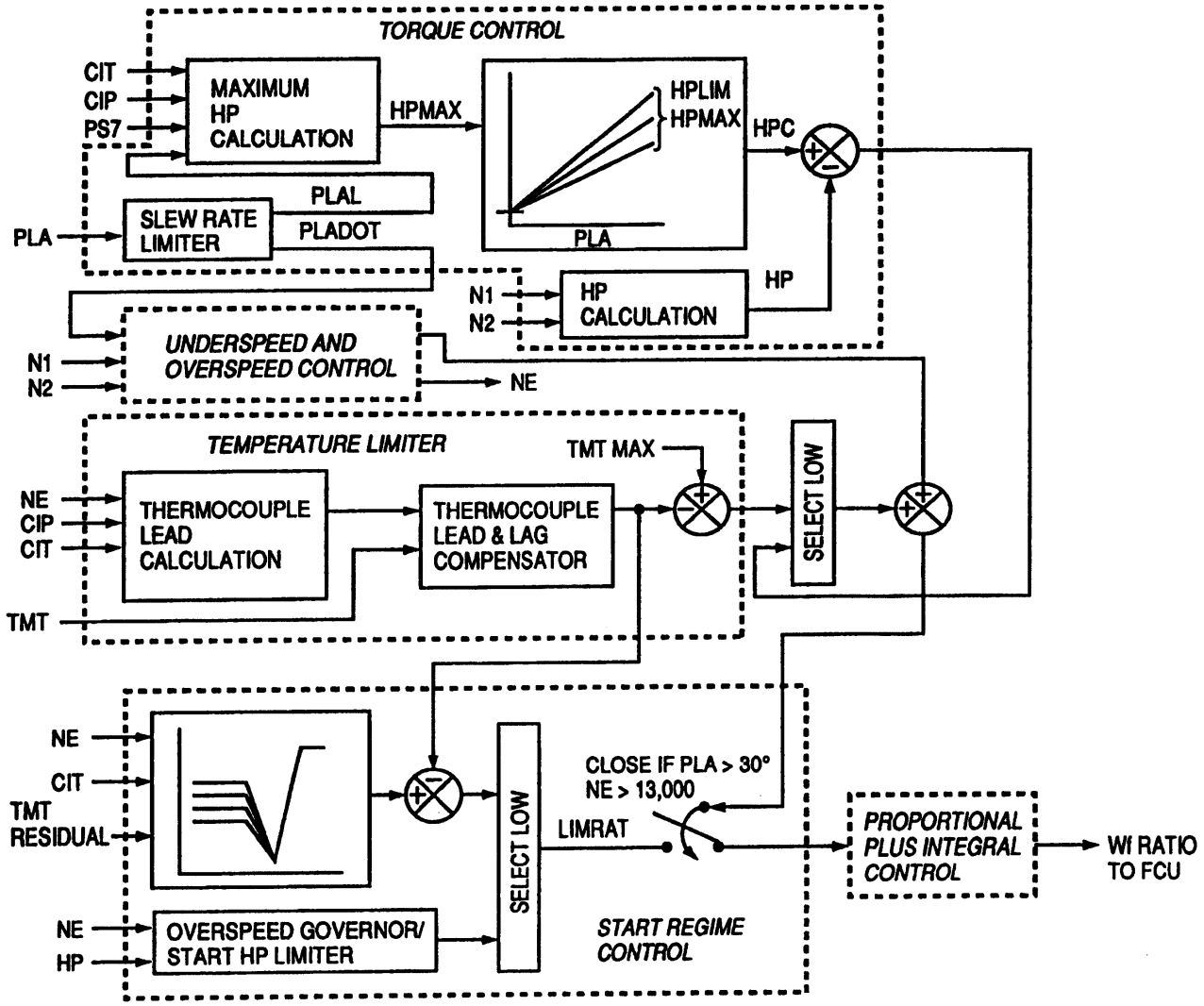

CIP –	COMPRESSOR INLET PRESSURE
CIT –	COMPRESSOR INLET TEMPERATURE
FCU –	FUEL CONTROL UNIT
HP –	HORSEPOWER
HPC –	HORSEPOWER CALCULATION
HPLIM –	HORSEPOWER LIMIT
HPMAX –	HORSEPOWER MAX
LIMRAT –	LIMITING RATIO
NE –	RPM
N1 –	COMPRESSOR SPEED
N2 –	COMPRESSOR SPEED
PLA –	POWER LEVER ANGLE
PLADOT –	POWER LEVER ANGLE DEGREES OF TRAVEL
PLAL –	POWER LEVER ANGLE, LIMITED (20°/SEC)
PS7 –	TURBINE OUTLET STATIC PRESSURE
TMT –	TURBINE MEASURED TEMPERATURE
Wf –	FUEL FLOW
> –	GREATER THAN

Figure 2. Control Schematic

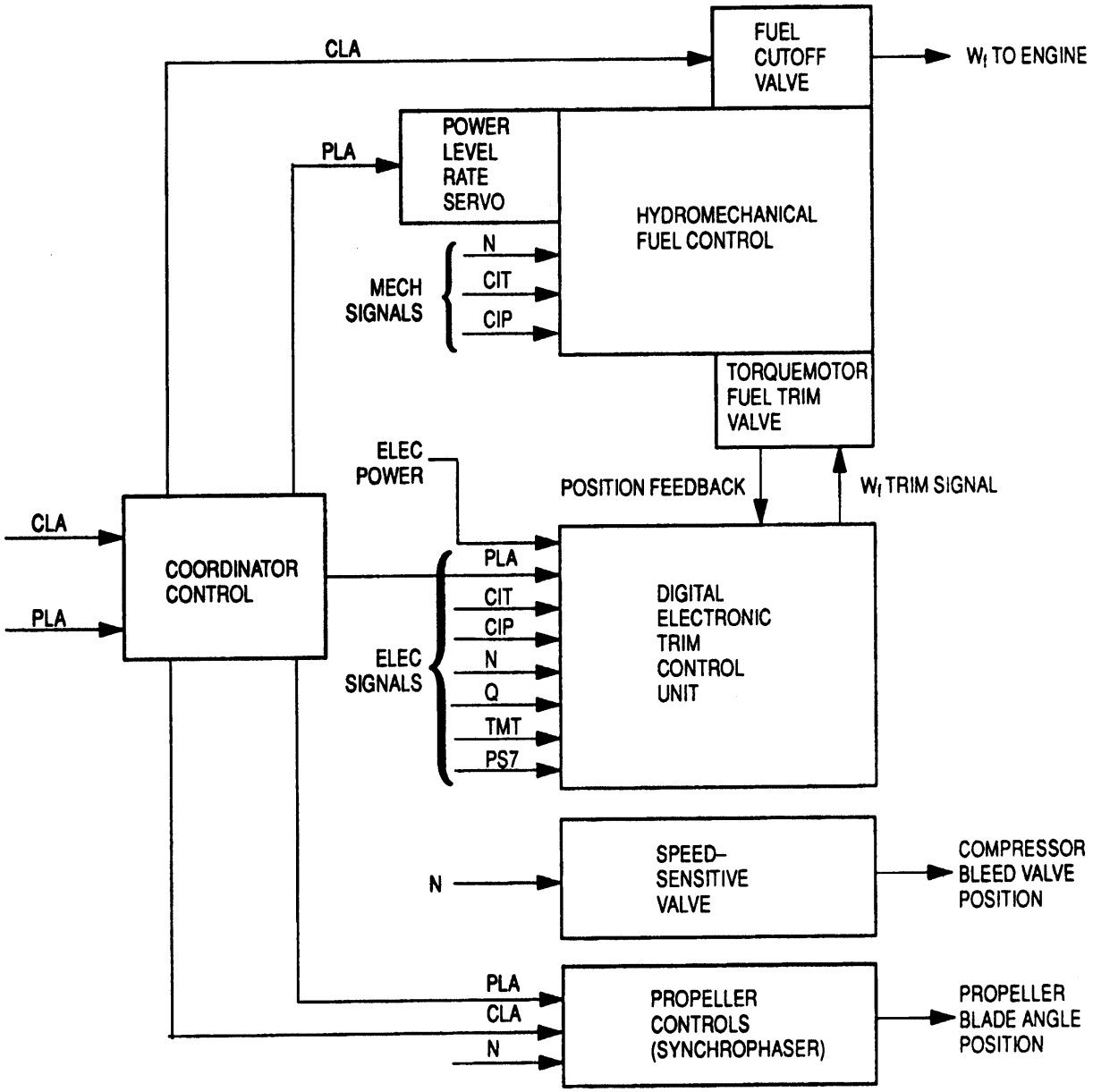

CIP = COMPRESSOR INLET PRESSURE
CIT = COMPRESSOR TEMPERATURE
CLA = CONDITION LEVER ANGLE
N = SPEED
PLA = POWER LEVER ANGLE

Q = TORQUE
Wf = FUEL FLOW
PS7 = TURBINE OUTLET STATIC PRESSURE
TMT = TURBINE MEASURED TEMPERATURE

Figure 3. Engine Control

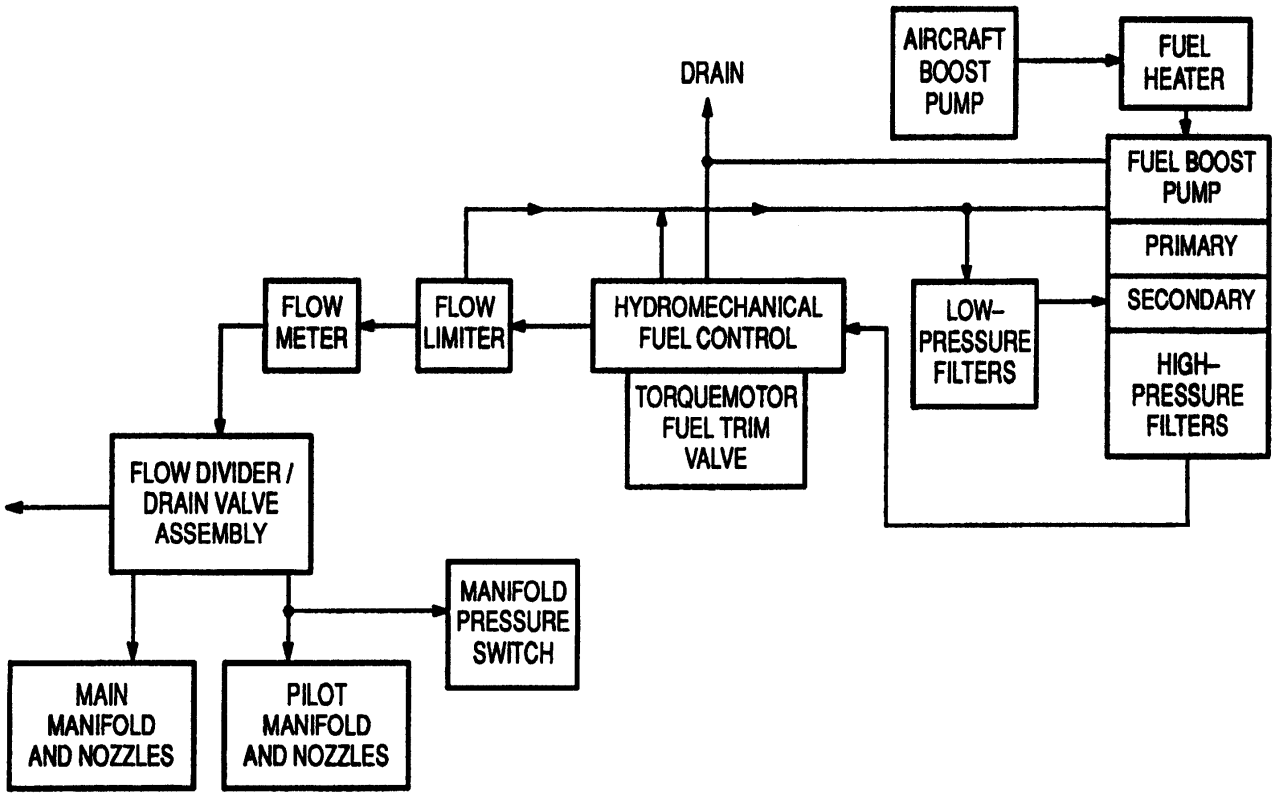

Figure 4. Fuel System

16. The fuel control will deliver 100% of nominal engine fuel requirements without electrical power. The torquemotor fuel trim valve adds to, or subtracts from, this hydromechanical fuel flow schedule as necessary to achieve the electronic fuel flow schedule. This limits turbine temperature or controls horsepower and engine overspeed.

17. The fuel control includes a cutoff valve, for stopping fuel flow to the engine which is both mechanically and electrically controlled. The cutoff valve is actuated by mechanical linkage and an electrically actuated servo actuator. The mechanical cutoff is connected with the condition arm linkage. Both the electrical and mechanical actuators must be in the open position to permit fuel flow.

18. The cutoff valve is of a bypass type. As the discharge flow is cut off, the exit port flow is bypassed to the control main body which is connected to the gear pump inlet. This will help to relieve the excessive fuel pressure on shutdown. During an engine start, the solenoid operated valve remains closed until the engine reaches 2200 rpm (15.8%). At this point, the DETC actuates and opens the solenoid operated valve permitting fuel flow to the engine.

19. FUEL TRIM VALVE. The fuel trim valve consists of a two stage torquemotor servo valve, a Linear Variable Differential Transformer (LVDT), mode select valve, and mode select solenoid. Fuel bypass valve performance will be scheduled by controlled flow from the servo valve to the spring side of the bypass valve diaphragm. The bypass valve responds to flow from the servo valve.

20. Trim authority ranges from 50% take to 40% put. Nominal engine fuel requirements at any time (null) can be augmented by 40% or reduced by 50% fuel flow to achieve engine control requirements. The spool valve moves in response to the torquemotor. The torquemotor is positioned by the DETC command and schedules fuel flow through the variable orifice. Spool valve position is fed back to the DETC by the LVDT for a fault check on valve movement.

21. The mode select valve allows either automatic, electronic fuel trim or manual operation through the hydromechanical fuel control. With the DETC switch in CONTROL the mode select solenoid is energized which positions the mode select valve and permits electronic fuel trim operation. If the solenoid is de-energized the trim valve reverts to null fuel flow scheduled by the fixed orifice and the hydromechanical fuel control assumes full engine control. The fuel level adjustment applies in both the control modes.

22. POWER LEVER RATE SERVO. The power lever rate servo satisfies the fuel change rate requirement for the T56–A–427. The follow up servo seeks to match the position of the input shaft, but only at a rate allowed by the control bleeds. Although the power lever can be moved rapidly (no more than 28 degrees/sec), that movement will not be directly transmitted to the part throttle scheduling cam. The power lever rate is computed in the DETC as well, so that the electronic fuel trim command will always be synchronized with this mechanical command to the hydromechanical fuel control. Also referred to as the slew rate limiter, this function limits power lever rate change to 20 degrees/sec.

23. ELECTRICAL FUEL CUTOFF ACTUATOR. The function of the electrical fuel cutoff actuator is to electrically open and close the fuel cutoff valve. The solenoid operated control valve directs either regulated pressure or bypass pressure to the larger side of the piston. The piston moves in response and rotates the pinion and the actuator cam, which either opens or closes the cutoff valve. The cutoff valve closes either electrically by the cutoff actuator or mechanically by the position of the condition lever.

24. FUEL PUMP. The fuel pump is attached to the rear of the accessory gearbox and incorporates two gear type elements supplied by one centrifugal boost pump.

25. The design of the pump is such that the capacity of the primary gear type element is 10% more than that of the secondary element. This feature allows normal series operation of the elements with the primary pump taking full load without the need for a bleed valve bypassing the secondary pump. During an engine start, the pumps are in parallel operation, and the paralleling valve that is on the high pressure fuel filter is closed.

26. When the engine speed reaches approximately 65% during start, the pump paralleling valve opens and series operation occurs. In the event of a failure of the primary pump, the secondary pump is capable of providing sufficient fuel flow and pressure to operate the power section in the normal operating range. The fuel pressure switch will be closed, causing the primary fuel pump failure warning light to illuminate.

27. **LOW PRESSURE FUEL FILTER ASSEMBLIES.**

28. Four five–micron, low–pressure, paper–element, fuel filters (two per assembly) are located between the outlet of the centrifugal boost pump element of the fuel pump and the inlet at the gear pump. Each filter assembly contains a bypass valve controlled by the fuel inlet–to–outlet pressure differential. The pressure differential switch connects across the inlet and the outlet of the filters. If the differential pressure exceeds 7.5 psi, the switch closes and completes a circuit to a filter light in the cockpit.

29. **HIGH PRESSURE FUEL FILTER ASSEMBLIES.**

30. The 33 micron high pressure fuel filter assembly provides a bypass valve for the filter element to permit a continuous flow of fuel to the engine in the event the filter element becomes clogged. The high pressure fuel filter contains a paralleling valve which, when closed, permits the combination of outputs from both pump elements during engine start. The paralleling valve will also provide series operation for normal engine operation when open.

31. A hydraulically operated electrical pressure switch provides a warning signal in the event of a primary pump failure in addition to providing means for checking secondary pump performance during starts. When the secondary pump discharge pressure increases to 140–160 psig, the primary fuel pump warning light will illuminate.

32. **DIGITAL ELECTRONIC TRIM CONTROL.**

33. The Digital Electronic Trim Control (DETC) mounts in the nacelle and is powered by 28V DC power. The DETC is illustrated in figure 5.

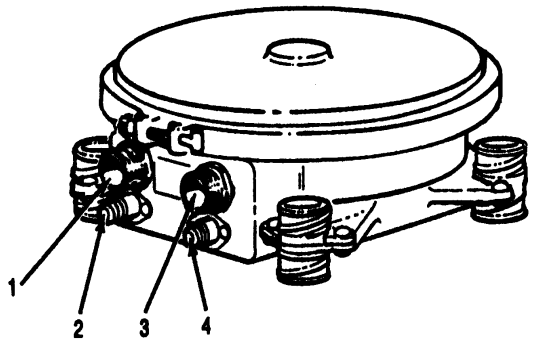

1. J1 (From A/C, EMS, Lights and Power)
2. CIP Port
3. J2, (From Engine to Fuel Valve)
4. PS7 Port

Figure 5. Digital Electronic Trim Control

34. The DETC will command a fuel trim, based on engine sensors and power lever inputs that continually control or limit horsepower or limit turbine temperature throughout engine operation. The DETC will also provide speed signals for all speed dependent functions.

35. The DETC transmits the third stage turbine thermocouple signal so that the cockpit indicator displays compensated turbine temperature. When a failure is detected, the DETC will perform a self test and disable the variable fuel trim. The DETC will also allow for the reconfiguration of control modes and continued (although degraded) electronic fuel trim with the detectable loss of certain inputs. The LIMIT DEGRAD light will illuminate in the cockpit.

36. A simplified logic diagram for the DETC is illustrated in Figure 6. Compressor inlet pressure is transmitted directly from the compressor inlet housing to the DETC where a transducer converts it to an electrical signal for processing. Thermocouple signals from the third stage turbine location are cold junction compensated in the DETC for processing. With the DETC OFF, the cockpit indicator will read 15°C hotter as compensation is lost.

37. The combination of a fixed resistor and variable voltage augments the direct thermocouple signal. Variable voltage control is scheduled by the turbine temperature compensation algorithm and provides for engine control and indicator display during normal operations. If a failure either disables the alogorithm or the entire DETC, the direct thermocouple signal drives the gauge.

38. The torquemeter system includes a torque shaft, reference shaft, four pole torquemeter pickup, harnesses, gauges, and DETC signal conditioning. The torquemeter pickup provides reference and torque AC waveforms which can be decoded as engine torque and speed outputs. The frequency of the torque and reference waveforms is directly proportional to engine speed, and the phase difference between the waveforms is proportional to engine torque. The DETC uses the torquemeter system parameters to calculate the horsepower output of the engine. The control system schedules and limits horsepower through a DETC trim signal to the Fuel Trim Valve. Calibration of each DETC to a specific engine torquemeter system prevents setting the torque reference to an erroneous value.

39. A single speed signal is chosen after both candidates go through a series of redundancy management tests and the engine control operates on that signal until it fails a test. The signal is used for transient underspeed and overspeed governor protection, horsepower computation, and start sequencing.

40. The coordinator control potentiometer supplies the DETC with power lever position and, through software, the rate of power lever movement is calculated. Below 30 degrees PLA, the DETC schedules fuel flow for temperature limiting only. Computed power lever rate is compatible with the power lever rate servo so that high rates do not command fuel flow changes before the hydromechanical fuel control has knowledge of the input. Rate also determines if the underspeed and overspeed governor command loops are active. During steady state operations they are inactive, but during and shortly after power lever movements, the DETC seeks to minimize speed excursions outside the specified range.

41. **TURBINE TEMPERATURE MEASUREMENT SYSTEM.**

42. Turbine Measured Temperature (TMT) is measured by 14 single element, Platinel–tipped, Chromel–Alumel thermocouples imbedded in a cavity in the third stage vanes. A small passageway is cut from the pressure side through to the suction side of the vane. The exposed Platinel tip is fixed in the middle of this passageway for gas temperature sampling. Temperatures at this location are 300°F to 400°F (149°C to 204°C) below the turbine inlet temperature.

43. The thermocouples are harnessed in a parallel circuit to provide a single, averaged TMT signal to the DETC for processing and conversion to compensated turbine temperature for a flight deck display and engine control.

44. **TORQUE AND SPEED MEASUREMENT SYSTEM.**

45. The torquemeter magnetic pickup supplies both speed and torque signals for the engine. The pickup has one pair of poles to drive the cockpit indicator. A second pair of poles provide wave form to the DETC for torque and speed computations. Although this results in only one torque signal, there are two speed signals providing redundancy for speed–dependent control functions. Calibration of the torquemeter system includes the DETC as well as the indicator so that the engine output horsepower is measured correctly by the DETC.

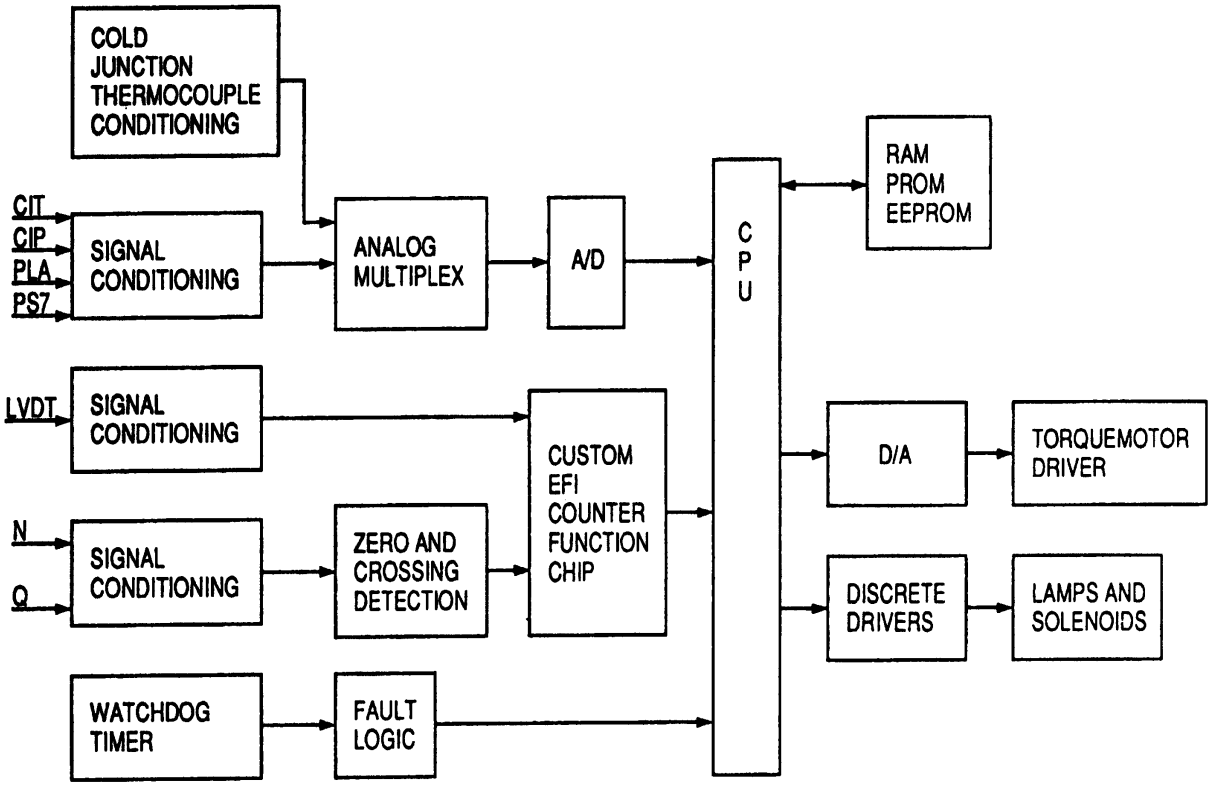

A/D –	ANALOG TO DIGITAL
CIP –	COMPRESSOR INLET PRESSURE
CIT –	COMPRESSOR INLET TEMPERATURE
D/A –	DIGITAL ANALOG
EEPROM –	ELECTRICALLY ERASEABLE PROGRAMMABLE READ ONLY MEMORY
EFI –	EVENTS FREQUENCY INTERFACE
LVDT –	LINEAR VARIABLE DIFFERENTIAL TRANSFORMER
N –	SPEED
PLA –	POWER LEVER ANGLE
PROM –	PROGRAMMABLE READ ONLY MEMORY
PS7 –	TURBINE OUTLET STATIC PRESSURE
Q –	TORQUE
RAM –	RANDOM ACCESS MEMORY

Figure 6. Digital Electronic Trim Control Simplified Logic Diagram

46. **COMPRESSOR INLET TEMPERATURE MEASUREMENT.**

47. A platinum resistance electronic temperature sensor combines with the temperature probe (Tt2) of the hydromechanical fuel control to form an assembly. The sensor is in the same compressor inlet location and is provided with anti–icing air in the same manner as the temperature probe.

48. **EXHAUST PRESSURE MEASUREMENT.**

49. A port on the rear turbine bearing support is the source of an exhaust static pressure PS7 signal for the engine. A pressure line connects this port to the DETC where a transducer converts pressure to a signal for processing.

50. **COMPRESSOR INLET PRESSURE MEASUREMENT.**

51. A total pressure probe is the source of an inlet pressure signal for the engine. Tubing attaches this probe to both the hydromechanical fuel control and the DETC where a transducer converts it to a signal for processing.

52. **COORDINATOR.**

53. The coordinator bolts to the rear face of the fuel control and houses the power lever shaft, mechanical discriminator, manual fuel cutoff shaft, power lever position potentiometer, potentiometer drive gears, and the necessary electrical wiring. The coordinator assembly coordinates the operation of the propeller, DETC, and the fuel control.

54. The coordinator receives signals through linkage from the power lever and the condition lever and transmits these signals to the fuel control and propeller regulator through a system of levers, and control rods. The potentiometer in the coordinator is driven from the power lever shaft through a gear set and transmits power lever position to the DETC.

55. **ENGINE ADVISORY/CAUTION ANNUCIATION.**

56. A yellow caution light and a green advisory light are located in the test cell. The caution light is DEC LMT DEGRADE. The advisory light is DEC CNTL DEGRADE. When the DETC is OFF or degrades to OFF, both the LMT DEGRADE and the CNTL DEGRADE lights will illuminate. When the DETC is in LIMIT, or the controlling has degraded, the CNTL DEGRADE advisory light will illuminate. When the limiting mode has degraded, the LMT DEGRADE caution light will illuminate. When the DETC degrades itself to OFF, the mode select signals a timed or soft reversion to a fixed orifice hydromechanical mode. If the DETC switch is turned off, the mode switch will be immediate, or hard. The soft reversion prevents an abrupt change in power.

57. **COMBUSTION CHAMBER DRAIN VALVES.**

58. Two combustion chamber drain valves are located in the bottom of the combustion chamber assembly. A drain valve is located at each end of the combustion chamber.

59. The valve is a spring loaded, flat plate type which prevents the accumulation of fuel in the burner section after an unsuccessful start or after stopping the engine. The drain valve opens below 4 psi pressure, and closes above 1 psi on increasing pressure.

60. **POWER LEVER AND CONDITION LEVER.**

61. The lever quadrant for a typical installation is illustrated in figure 7.

62. The section of the quadrant from FLIGHT IDLE to MILITARY (34 degrees to 90 degrees) comprises the normal or operating flight range. In this range, engine speed is constant, and engine power delivered is a function of the power lever position.

63. In the flight range, power is controlled by the fuel control system which schedules the fuel flow so that power varies linearly with power lever position. The portion of the quadrant from MAXIMUM REVERSE to FLIGHT IDLE (0 degrees to 34 degrees) is the taxi range. In this range, thrust and horsepower are determined by direct control of the propeller blade angle.

64. The condition lever serves to electrically close the electric fuel cutoff valve at GROUND STOP, to electrically and mechanically close the mechanical fuel shutoff valve as it is moved toward FEATHER, and to feather the propeller when in the FEATHER position. The condition lever opens the mechanical fuel shutoff valve as it is moved out of the feather position, and unfeathers the propeller when moved to AIR START. During normal operation the condition lever must be positioned in RUN.

65. The power lever and condition lever are mechanically linked to the engine control input located on the coordinator control.

66. **LOW SPEED GROUND IDLE SWITCH.**

67. This switch is provided to select either low or high speed during ground operation. Low Speed is 70.9–72.1% rpm (10,100–10,269 rpm) and high speed is (96.3–99.1% rpm). When the power lever is between the 9 degree and 30 degree positions and the switch is moved to LOW, the engine speed changes to low rpm. The switch will remain in LOW until returned to NORMAL. If high rpm or reverse is desired, the switch should be returned to NORMAL before moving the power lever out of the 9 degree to 30 degree range.

68. **PROPELLER CONTROL LINKAGE.**

69. The propeller control linkage provides the means by which the coordinator transmits signals to the propeller regulator. When the coordinator input lever is positioned in the taxi range, the resultant propeller regulator position represents a definite propeller blade angle which is proportional to the input lever position. In the flight range, between FLIGHT IDLE and MILITARY, the regulator setting represents a fixed governing speed.

70. **SPEED SENSITIVE VALVE.**

71. As rpm is increased, a set of flyweights transmits increasing force to a poppet shaft which acts on a spring. At approximately 13,000 rpm the flyweight force is great enough to overcome the spring force and the shaft slides, porting a line from the 5th and 10th stage bleed valve actuator line to close the bleed valves.

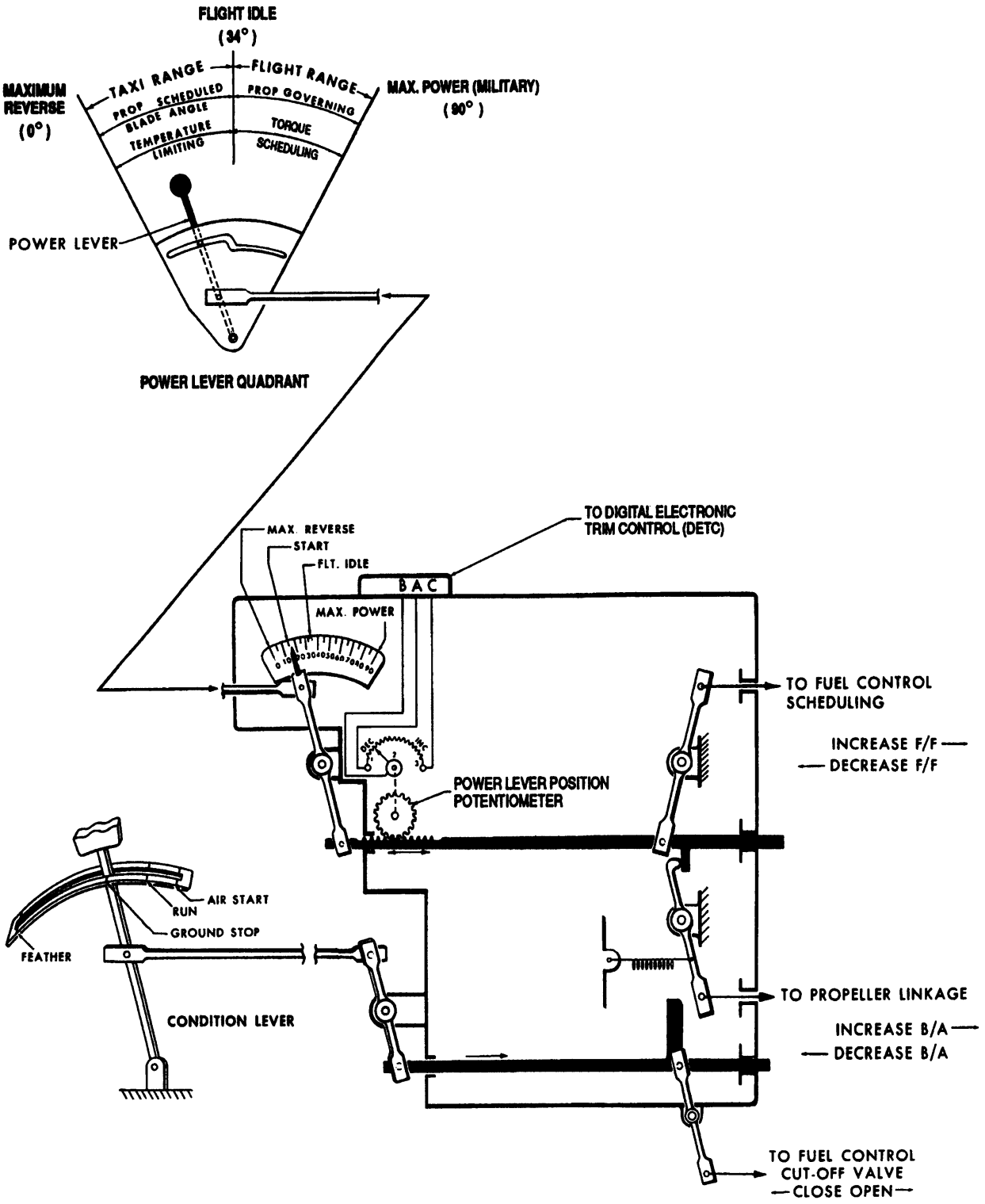

Figure 7. Basic Elements of Engine Control

INTERMEDIATE MAINTENANCE

DESCRIPTION AND PRINCIPLES OF OPERATION

OIL SYSTEM

Reference Material

None

Alphabetical Index

Subject Page No.

Introduction 1

Power Section Oil System Description 1

Power Section Oil System Principles of Operation 2

Reduction Gear Oil System Description 2

Reduction Gear Oil System Principles of Operation 3

Record of Applicable Technical Directives

None

1. **INTRODUCTION.**

2. The engine power section and reduction gear assembly each use a dry sump lubrication system which is supplied with oil from an aircraft furnished tank. After the necessary components have been lubricated and cooled, the oil is scavenged and returned to the aircraft supply system. (See figure 1.)

3. Oil from the oil tank enters the power section pressure element of the main oil pump which is mounted on the front side of the accessory drive housing assembly. The pressure element pumps more oil than is required to lubricate the power section.

4. The reduction gear oil pump assembly receives oil from the aircraft tank and pumps this oil through the oil filter, check valve, and into an oil passage in the reduction gear rear housing. Since the oil tank is higher than the oil pump, the check valve prevents oil from draining into the reduction gear whenever the engine is not in operation. Oil pressure is established by oil viscosity, restrictions to flow, and volume flow.

5. **POWER SECTION OIL SYSTEM DESCRIPTION.**

6. The power section of the engine incorporates an independent dry sump oil system which includes a combination main pressure and scavenge oil pump assembly, a rear turbine scavenge pump and an external scavenge pump. (See figure 2.)

7. The main oil pump is located on the center of the front face of the accessories drive housing cover.

8. A pressure regulating valve, located in the main oil pump, senses pressure at the filter outlet and limits the oil pressure delivered by the pump to 55 ± 5 psig.

9. A filter bypass valve is incorporated between the cored passages leading into and out of the filter. It bypasses oil around the filter in the event the filter becomes clogged.

10. **REDUCTION GEAR OIL SYSTEM DESCRIPTION.**

11. The reduction gear assembly incorporates a dry sump oil system (figure 3) which consists of a gear type oil pump, filter, and two scavenge oil pumps. Both scavenge pumps have the same capacity and are mounted internally, one at the bottom and one in the nose of the reduction gear assembly.

12. **POWER SECTION OIL SYSTEM PRINCIPLES OF OPERATION.**

13. Oil, supplied to the pressure pump from the aircraft furnished tank, is pumped through cored passages to a disk type or pleated element full–flow filter. This filter is also located on the accessory housing cover front face and incorporates a check valve to keep oil from seeping into the power section after shutdown. The check valve opens at 6–10 psig.

14. Oil is directed through a drilled passage in the vertical strut of the compressor air inlet housing to an annular passage which is made up of matching grooves cut in the inside diameter of the air inlet housing and the outer diameter of the compressor extension shaft housing.

15. A drilled passage in the lower left hand strut carries oil from the annular passage to an external pad on the air inlet housing.

16. A tube passes the oil to the diffuser to provide compressor rear bearing lubrication.

17. An internal line from the compressor rear bearing location goes through the inner combustion chamber casing assembly and carries oil to the turbine front bearing.

18. The turbine rear bearing is lubricated by a continuation of the external tube from the diffuser to the turbine rear bearing support.

19. The oil is returned from the compressor front bearing, extension shaft bearing, and extension shaft splines by gravity through drilled passages in the air inlet housing to the accessory housing where it is scavenged by the main scavenge pump.

20. Lubricating oil in the compressor rear bearing drains to a sump and returns the oil through tubes in the diffuser to an external line. The external line returns oil to the accessory housing and then to the outlet side of the main scavenge pump.

21. Since the T56–A–427 does not have a diffuser scavenge pump, the oil from the diffuser sump is drawn out by the external scavenge oil pump, located on the accessory housing, and from there to the outer side of the main scavenge pump.

22. The oil is drawn from the turbine front bearing sump by the external oil pump mounted on the rear of the accessory housing.

23. The oil flows through a tube in the combustion section inner case to an outlet connector on the diffuser case and to the inlet of the external scavenge oil pump.

24. Oil which lubricates the turbine rear bearing falls into the sump of the rear turbine scavenge oil pump support assembly and is directed by the scavenge oil pump through the turbine–to–compressor tie bolt.

25. Drilled holes in the tie bolt provide lubrication for the front and rear turbine coupling shaft splines.

26. Oil drains through splines in the turbine coupling shaft to either the turbine front bearing sump or the diffuser sump. It is then picked up by the external scavenge oil pump and returned to the main scavenge oil pump outlet.

27. A scavenge pressure relief valve located in the accessory housing relieves pressure in the event the scavenge outlet becomes restricted by congealed oil in the aircraft system.

28. The power section oil pressure pump maintains positive oil pressure at all engine speeds and at all altitudes.

29. The power section oil pressure at normal rated speed under static sea level conditions is controlled by a regulating valve to 55 ± 5 psig at 185°F (85°C).

30. The power section scavenge pump relief valve opens at a scavenge oil pressure of 240 ± 14 psig. The scavenge oil pressure normally does not exceed 30–35 psig.

31. The engine breather, mounted on top of the air inlet housing, vents the aircraft oil tank, the power section and the reduction gear assembly.

32. **REDUCTION GEAR OIL SYSTEM PRINCIPLES OF OPERATION.**

33. Oil from the pressure pump passes through the filter assembly which includes a safety bypass valve that opens in the event the filter becomes clogged.

34. From the filter, the oil passes through a check valve and drilled passages to a pinion oil nozzle, the propeller brake, the planetary gearing, the main bearings, and the propeller shaft bearings.

35. The nose scavenge pump scavenges oil which collects in the front housing, and delivers the oil to a common outlet connected with the main scavenge pump. The main pump scavenges the oil which collects in the bottom of the rear housing, and then returns the oil through the common outlet through a scavenge filter to the aircraft oil tank.

36. The reduction gear assembly oil pressure pump maintains positive oil pressure at all engine speeds and at all attitudes.

37. The reduction gear oil system is a full–flow system and contains no pressure regulator. Minimum operation pressure is limited to 150 psig; maximum, to 250 psig; with a nominal setting at 180 psig.

38. The reduction gear oil system provides a pressure relief valve which limits maximum oil pressure to 250 psig.

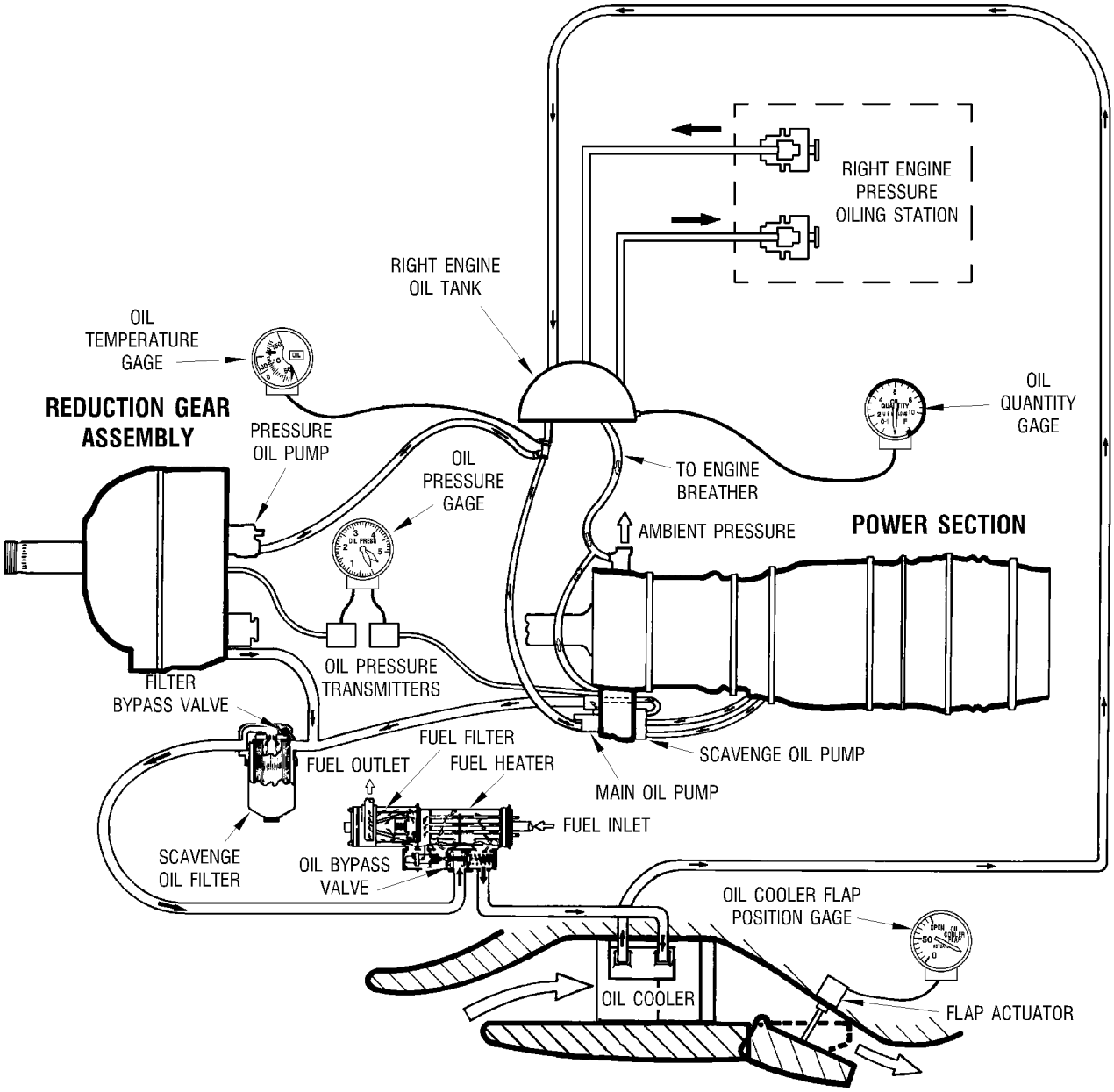

Figure 1. Typical Nacelle Oil Supply/Scavenge System

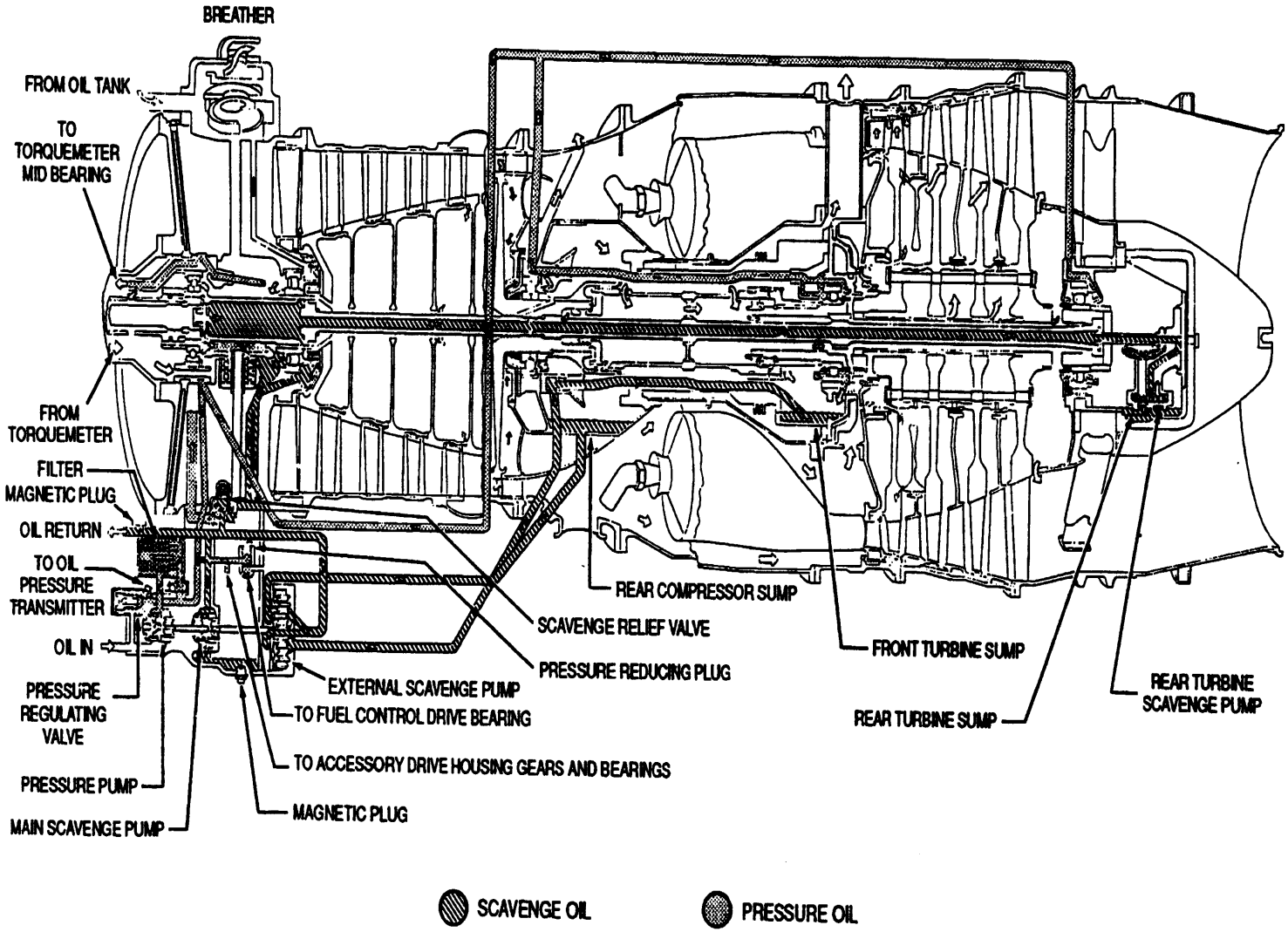

Figure 2. Power Section Oil System

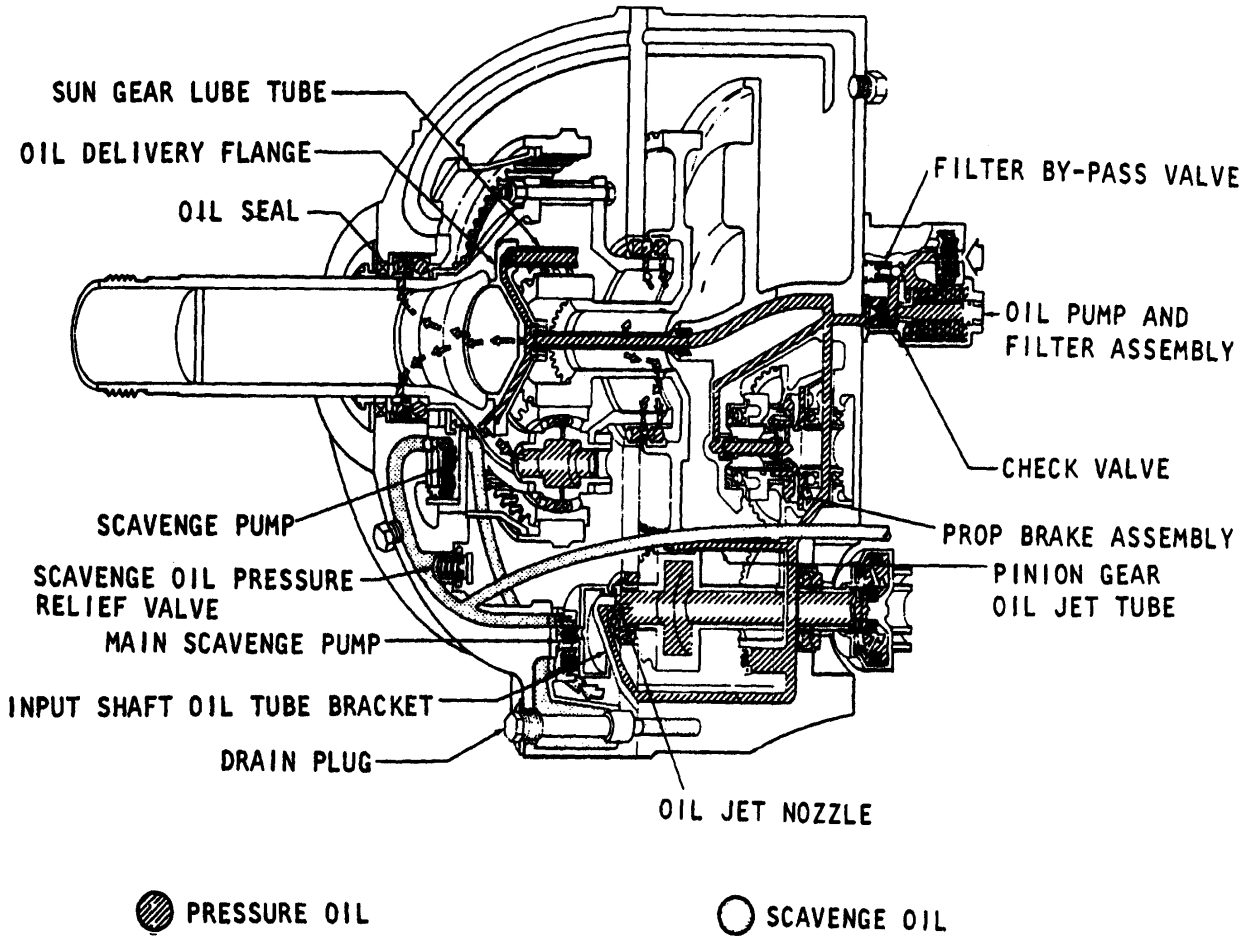

Figure 3. Reduction Gear Oil System Schematic

INTERMEDIATE MAINTENANCE

DESCRIPTION AND PRINCIPLES OF OPERATION

ELECTRICAL SYSTEM

Reference Material

None

Alphabetical Index

Subject	Page No.
Electrical System Schematic	2
Engine Monitoring System	2
Ignition System	2
Power Section Harnesses	2
Thermocouples and Thermocouple Harness	2

Record of Applicable Technical Directives

None

1. **ELECTRICAL SYSTEM SCHEMATIC.**

2. Figure 1 illustrates the various engine furnished components which require electrical power for all or a portion of their operation. The figure also shows some of the airframe–furnished switches required for these engine–furnished components.

3. The following engine components require 28 Volts DC for their operation:

a. Feather solenoid
b. Anti–icing solenoid valve
c. Fuel manifold pressure switch
d. Ignition relay
e. Ignition exciter
f. High pressure fuel filter
g. Fuel control (cutoff solenoid)
h. Coordinator control
i. Digital Electronic Trim Control (DETC)
j. Low speed ground idle solenoid
k. Torquemeter pickup
l. Manifold drain valve solenoid
m. Paralleling valve solenoid
n. Fuel trim valve solenoid
o. Negative torque system check solenoid
p. Compressor dis–charge transducer
q. Thrust sensitive switch
r. Chip detector light
s. Accelerometers
t. Compressor inlet temperature probe.

4. The following test cell mounted components require 115 volts, 400 Hz three phase AC for their operation:

a. Turbine measured temperature indicator
b. Engine RPM indicator
c. Oil temperature indicator
d. Horsepower indicator.

5. The following test cell mounted components require 26 volt 400 Hz AC for their operation:

a. Reduction gear oil pressure indicator
b. Power section oil pressure indicator.

6. The following test cell mounted component requires 115 volt 60 Hz AC for its operation:

a. Fuel flow indicator.

7. **IGNITION SYSTEM.**

8. The ignition system consists of a controllable source of 28 volts DC power (test cell furnished), an ignition relay, a high energy exciter, two high tension leads, and two spark igniters.

9. The ignition relay will energize at approximately 15.5% (2200 rpm) during an engine start and de–energizes at approximately 63.2% (9000 rpm). When the relay energizes, the relay completes the necessary electrical circuits to the ignition exciter, fuel cutoff open solenoid and fuel pump paralleling valve solenoid.

10. A minimum of 20 volts DC must be continuously supplied during the starting cycle to the low voltage terminals of the ignition system. The ignition exciter raises the electrical potential to provide the necessary voltage and current to create an arc at each of the two spark igniters. The two spark igniters are connected to the exciter by high tension lead. The spark igniters are located near the front of the Number 2 and Number 5 combustion liners. The spark igniters ignite the fuel–air mixture during the start cycle.

11. **POWER SECTION HARNESSES.**

12. The wiring harnesses and cables connect to the engine mounted electrical components and terminate at three points for test cell connections. (See figures 2, 3 and 4.)

13. **THERMOCOUPLES AND THERMOCOUPLE HARNESS.**

14. Fourteen thermocouples, located in the third stage turbine vanes and wired in parallel, are dispersed about the engine centerline to provide an average indication of the hot gas temperature. (See figure 5.) The thermocouple output signal is referred to as Turbine Measured Temperature (TMT) and is directed to the Digital Electronic Trim Control (DETC). The signal is used by the DETC which also directs it to the cockpit indicator.

15. **ENGINE MONITORING SYSTEM.**

16. The following components are in the engine monitoring system.

a. Piezo–electric accelerometer (900°F)

b. Piezo–electric accelerometer (compressor and reduction gear)

c. Total pressure and temperature sensor

d. Absolute pressure transducer.

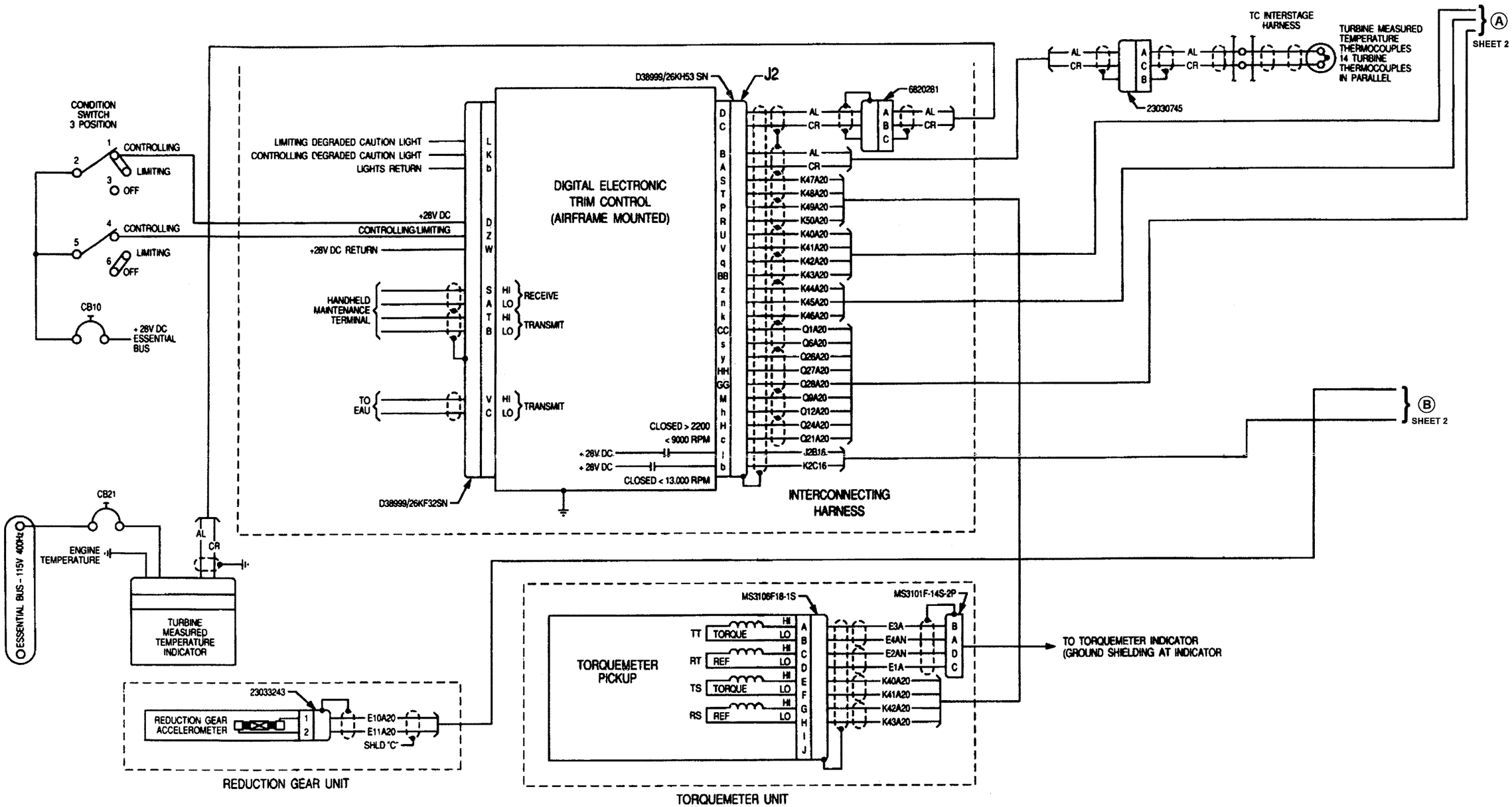

Figure 1. Electrical System (Sheet 1 of 2)

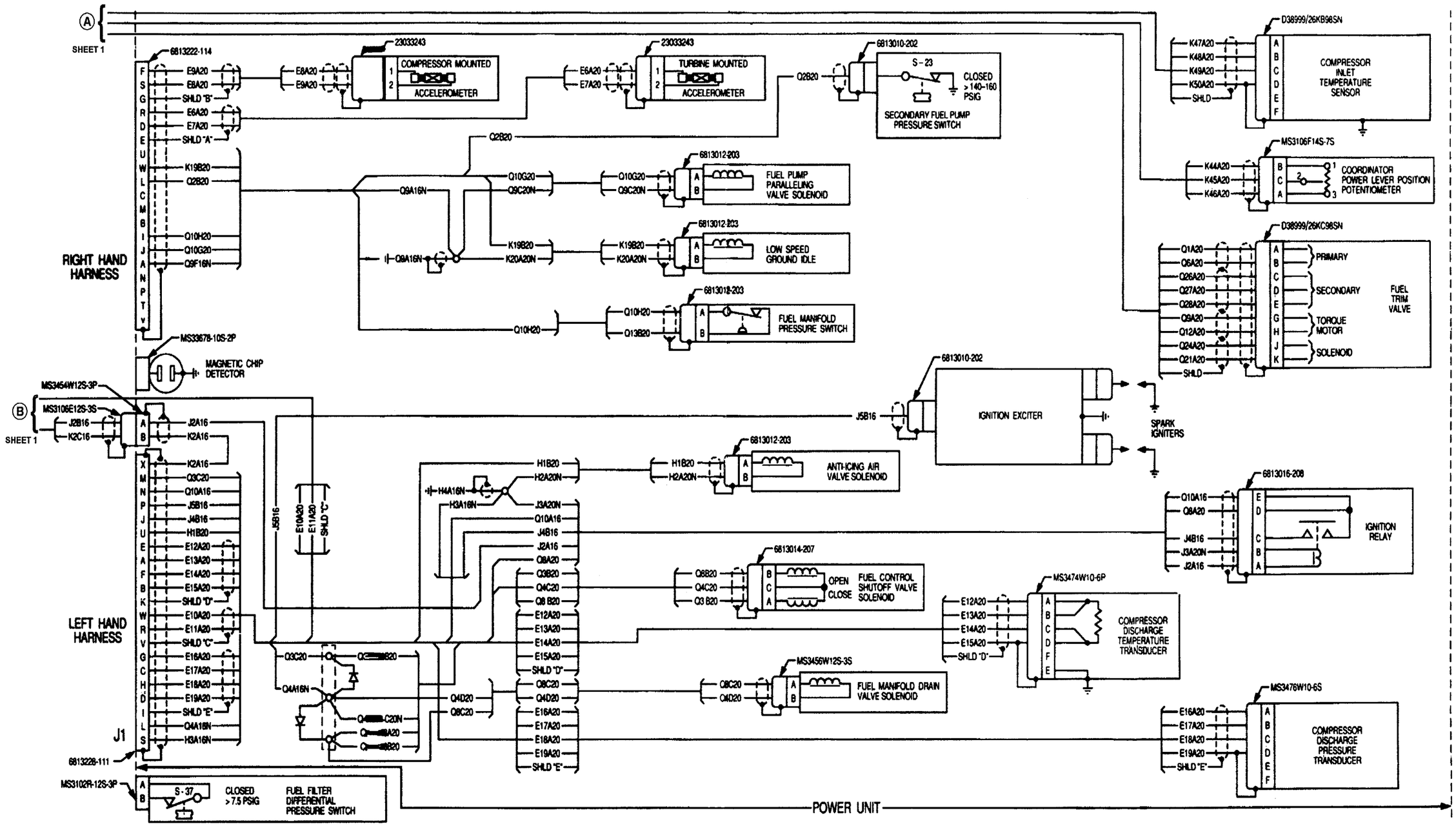

Figure 1. Electrical System (Sheet 2)

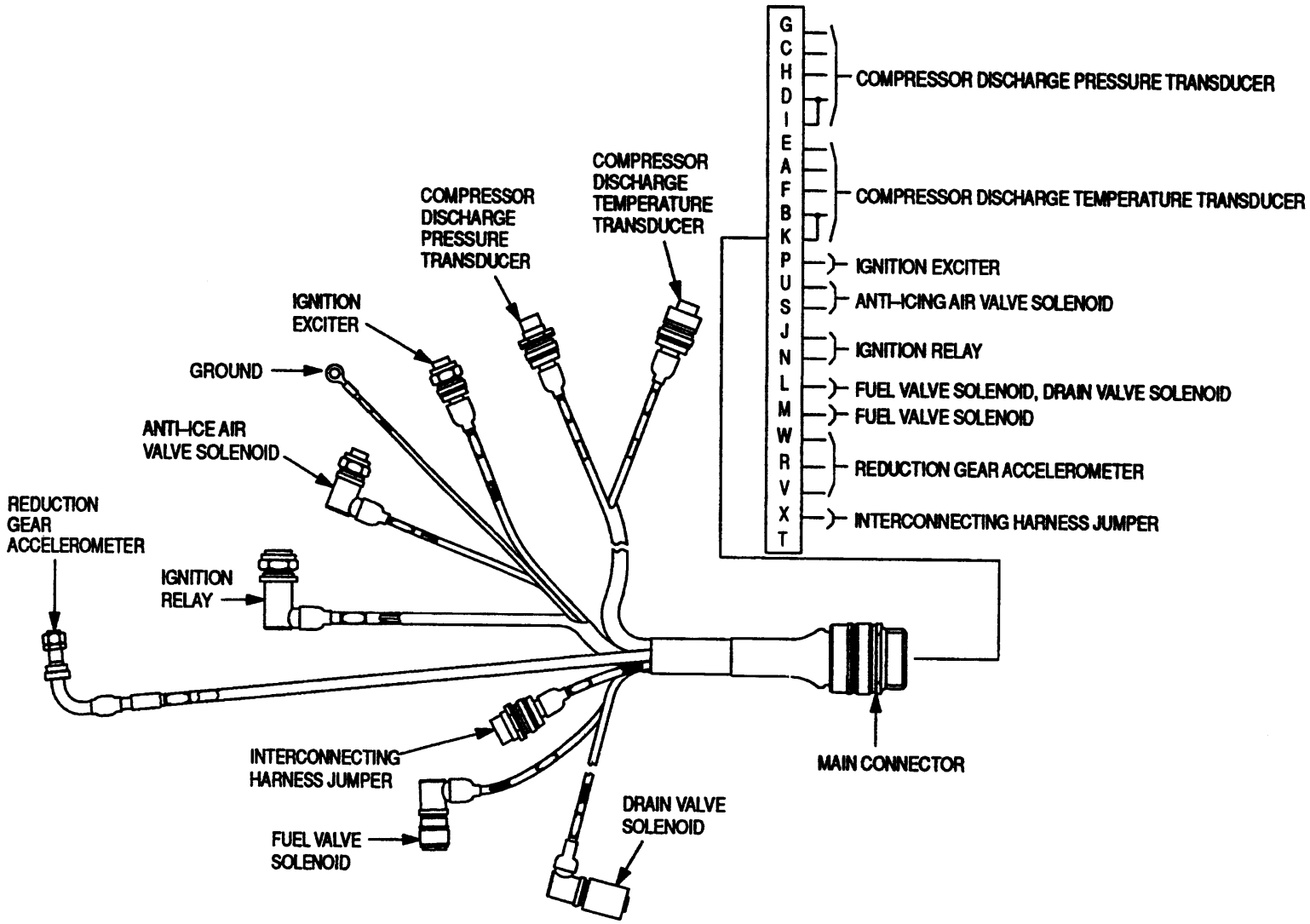

Figure 2. Left Hand Wiring Harness Assembly

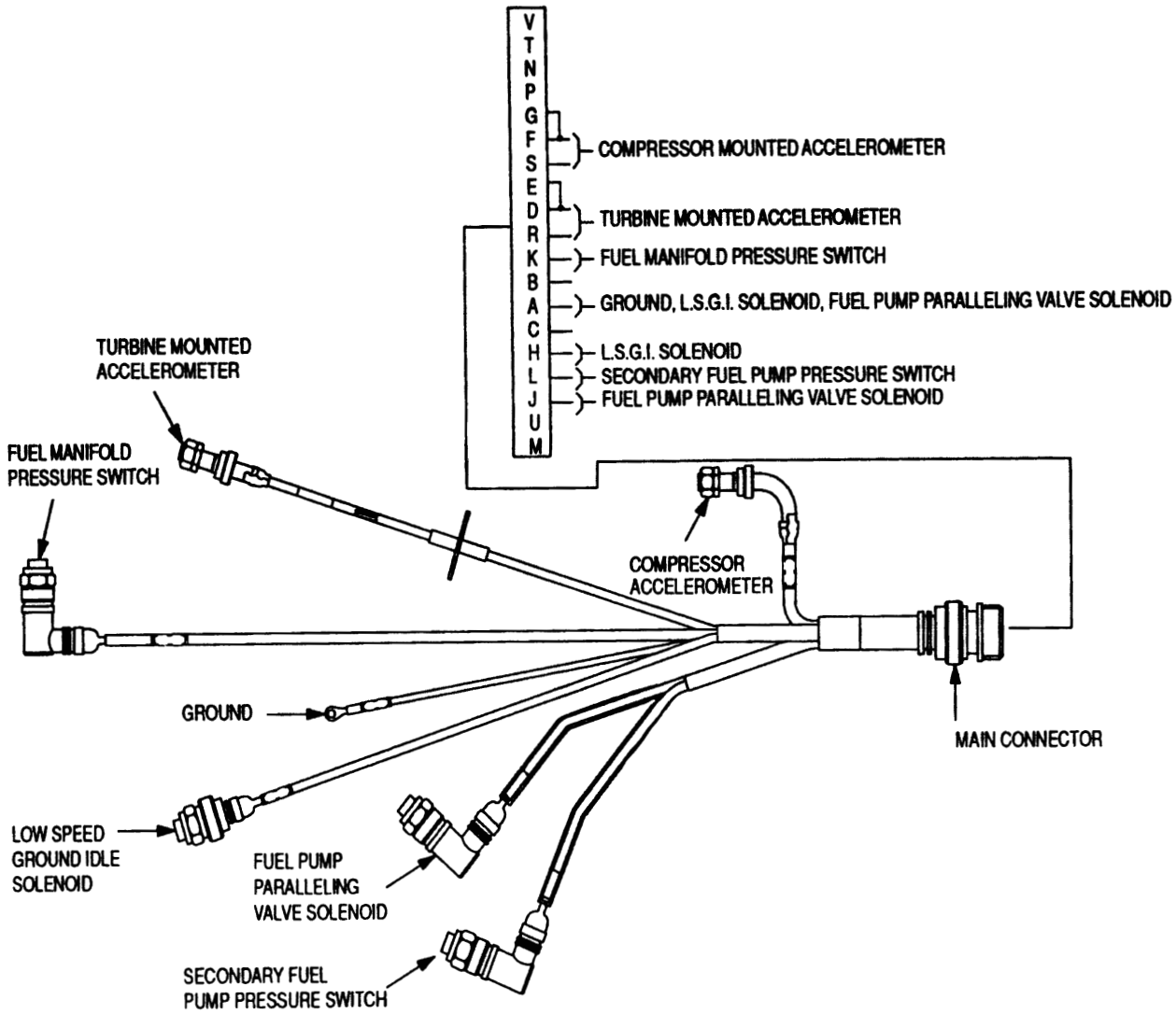

Figure 3. Right Hand Wiring Harness Assembly

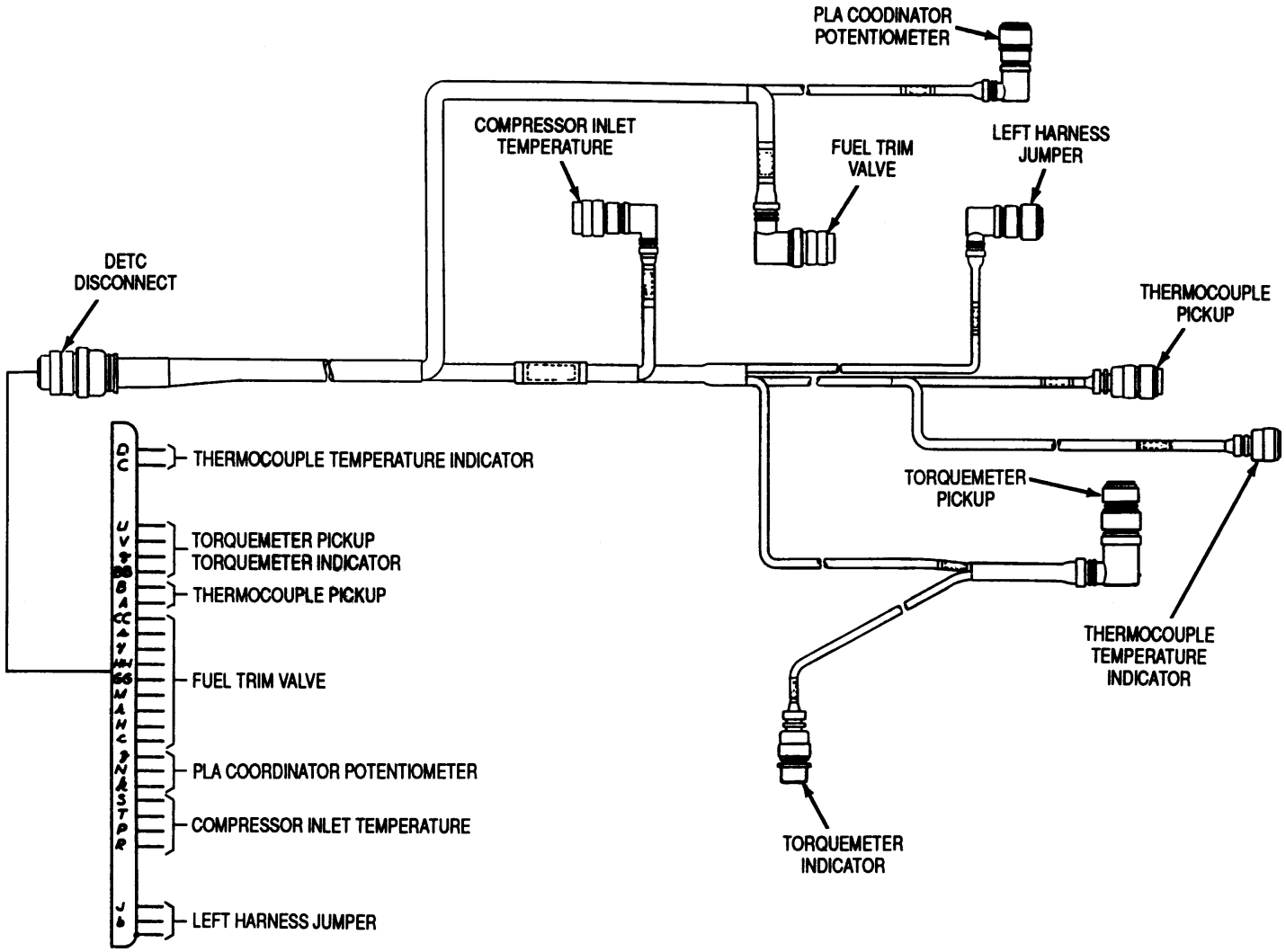

Figure 4. Interconnecting Wiring Harness Assembly

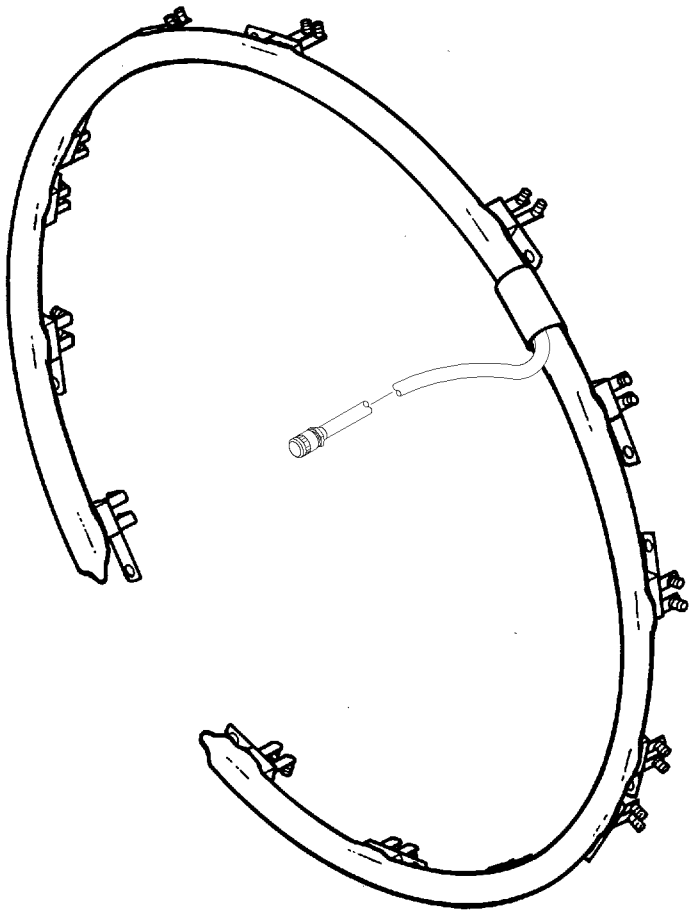

Figure 5. Turbine Measured Temperature Harness Assembly

INTERMEDIATE MAINTENANCE

DESCRIPTION AND PRINCIPLES OF OPERATION

AIR SYSTEM

Reference Material

None

Alphabetical Index

Subject	Page No.
Air System Description and Principles of Operation	1
Anti–Icing System	5
Compressor 5th and 10th Stage Bleed System	2
Engine Air Flow	1

Record of Applicable Technical Directives

None

1. **AIR SYSTEM DESCRIPTION AND PRINCIPLES OF OPERATION.**

2. **ENGINE AIR FLOW.**

3. Air is ducted to inlet of engine from an airframe furnished air inlet duct which is attached to compressor air inlet housing. (See figure 1.)

4. Air passes through the air inlet housing to the compressor inlet guide vane assembly which directs air flow to the first stage of the compressor. These vanes decrease the velocity of air. As the air passes through the compressor, it is alternately speeded up by rotor blades and slowed down by compressor (stator) vanes. At the same time, air is squeezed into an ever decreasing space. The increase in air pressure and temperature is 14.0 to 1.

5. Air is extracted at the diffuser for the anti–icing system.

6. Pressurized fourth stage air pressurizes the compressor front labyrinth seal to prevent oil from entering the compressor. This pressurized air is directed to the labyrinth seal through drilled holes in the 4th, 3rd, and 2nd stage wheel webs, and the drilled passages in the first stage hub.

7. A diffuser designed to form a divergent air passage directs air flow into the combustion section at decreased velocity and increased pressure.

8. Fuel nozzles, mounted on the diffuser, spray fuel into the forward end of the six combustion liners.

9. Air and fuel are mixed within the combustion liners and ignited by two spark igniters, causing continuous combustion to occur.

10. Not all air, which the compressor delivers to the combustion section, is directed to the interior of the combustion liners. Some air flows along the outside of the combustion liners to keep them cool. This cooling air is directed to the front side of the turbine assembly where it flows through several passages to keep temperatures of turbine components within permissible operating ranges.

11. Since air is entering the combustion section from the compressor, the gases expand through the combustion liners into the turbine section.

12. As gases expand through the turbine, they are straightened by turbine vanes and energy is extracted by turbine blades.

13. Turbine blades develop torque by absorbing energy from expanding exhaust gases. A four stage turbine develops the torque necessary to drive the compressor rotor, accessories, reduction gearing and propeller.

14. Energy remaining in the gases creates thrust which assists in propelling the aircraft.

15. Cooling air is used to cool the turbine by flowing air through the first–stage turbine vanes and first–stage turbine blades. The second stage vanes are also cooled. (See figure 2).

16. The cavity between the compressor and turbine from which oil is scavenged, is vented “down the shaft.” This vent air enters the turbine coupling shaft through drilled holes in the front and rear. Air passes through the turbine rotor and exits through oil seal to exhaust gases.

17. Cooling air is used to cool all the turbine wheels and the turbine wheel spacer which separates the first and second stage turbine wheels.

18. The first stage blade cooling air circuit is through–the–rotor delivery system. Cooling air is supplied from the combustor annulus through low diameter pre–swirl nozzles into a sealed annulus on the front side of the first–stage wheel. The air then passes through holes in the wheel disk into a cavity between the first and second–stage wheels. The first stage blade cooling flow is drawn from this cavity.

19. Air which leaks past the compressor rear bearing air seal is vented through the two side struts of the compressor diffuser.

20. There are two seal rings between the inner combustion casing and diffuser. These seal rings are used to minimize leakage at this point.

21. **COMPRESSOR 5TH AND 10TH STAGE BLEED SYSTEM.**

22. The power section incorporates a fifth and tenth stage compressor bleed system which is utilized during the engine starting cycle. The function of this system is to unload the compressor and to reduce the possibility of “surge” or “stall” (disruption of smooth air flow) ocurring during the starting cycle. (See figures 3 and 4.)

23. Eight pneumatically operated compressor air bleed valves are located on the compressor casing. Four of these valves are mounted on the fifth stage manifolds; the other four valves are mounted on the tenth stage manifolds.

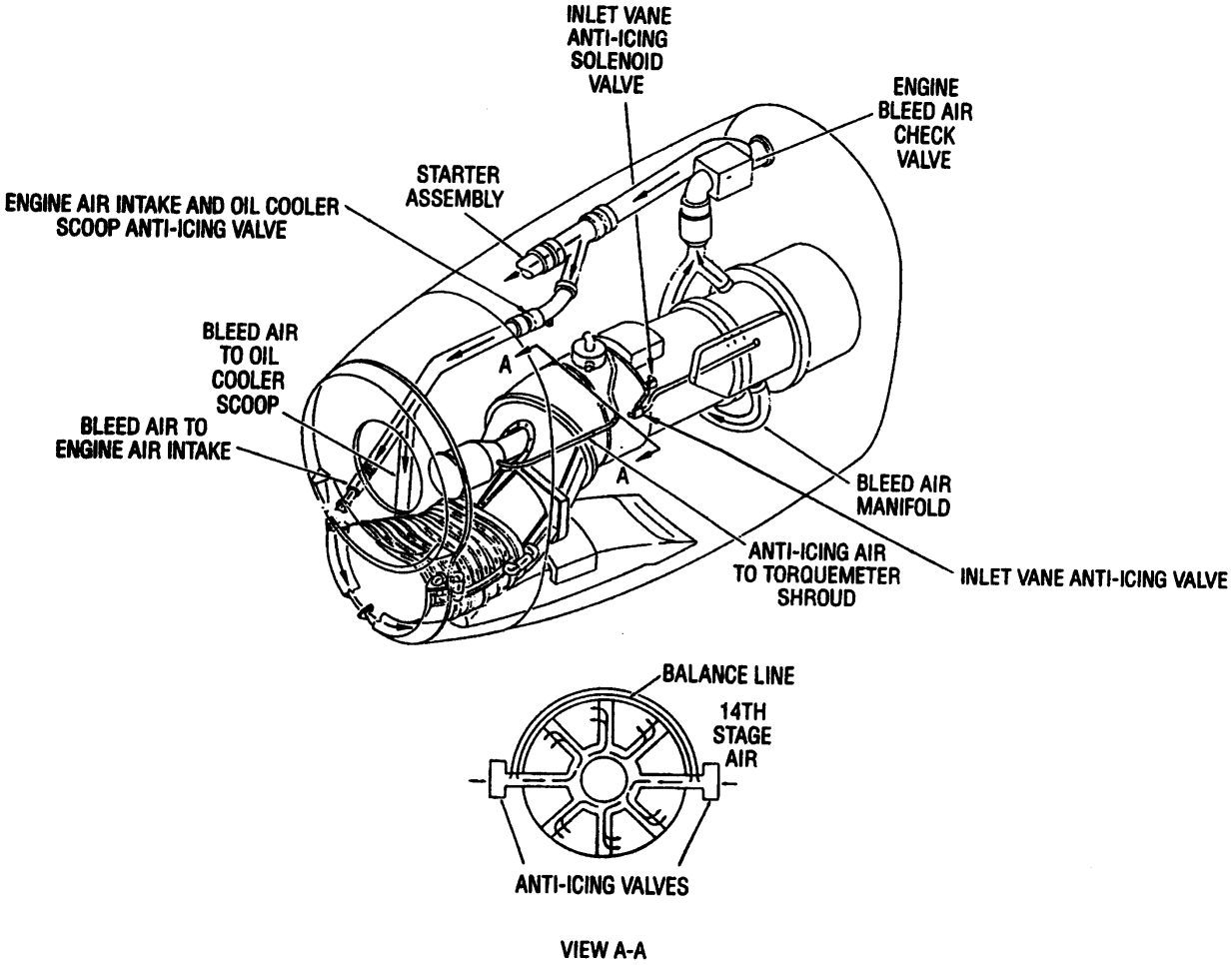

NOTE: BALANCE LINE IS INTERNAL.

Figure 1. Typical Nacelle Engine Air Flow

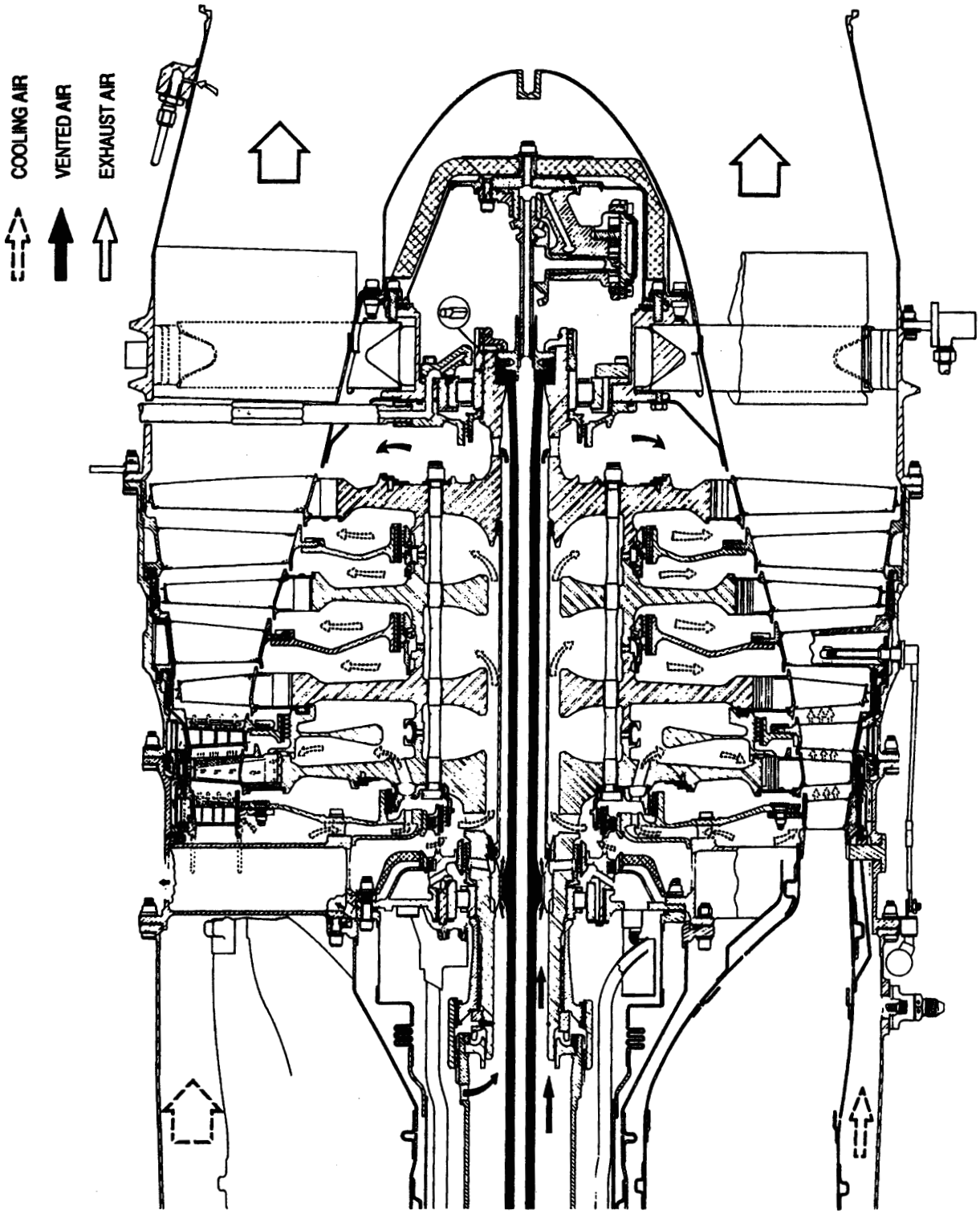

Figure 2. Turbine Section Cooling and Venting Air

24. The speed sensitive valve, mounted on the left front side of the accessory drive housing assembly, controls the opening and closing of the eight compressor air bleed valves.

25. A flex line and tube connects the speed sensitive valve to the diffuser (fourteenth stage pressure). An air filter in this line assures that the speed sensitive valve will receive air from the diffuser which is free of contaminants.

26. Flex lines also interconnect the outboard sides of eight compressor air bleed valves to the speed sensitive valve.

27. The speed sensitive valve's position is a function of engine rpm which is sensed by flyweights. The speed sensitive valve actuates at 91.3 percent. When rpm is less than 91.3 percent, the valve is in the closed position, i.e., it shuts off fourteenth stage pressure and vents the flex lines, which go to the bleed valves, to atmosphere. The fifth and tenth stage pressure is then great enough to push their bleed valve pistons out and permit air to escape.

28. The air, bled by the bleed valves, is collected by two sheet metal manifolds which duct the bleed air aft through the engine spray shield and overboard. (See figure 4.)

29. As the engine rpm exceeds 91.3 percent, the speed sensitive valve closes but opens the channel which permits the fourteenth–stage pressure to go to the fifth and tenth stage bleed valves.

30. Since the fourteenth stage pressure is greater, the bleed valve pistons are pushed in and air no longer is bled from the compressor.

31. **ANTI–ICING SYSTEM.** (See figure 5.)

32. The anti–icing air system provides hot air to specific engine areas that are subject to the formation of ice during icing conditions.

33. This system is entirely separate and independent of the aircraft anti–icing or deicing systems. Operation of the engine anti–icing system may be manually selected, when required, by the cockpit engine anti–icing switch.

34. Air is compressed at a ratio of approximately 14.0 to 1. As a result of this compression, the air is heated considerably, thus, compressor discharge air, which is extracted from the compressor diffuser, is an excellent source of hot air required by the engine anti–icing system.

35. The extracted hot air is directed to the following locations during engine anti–icing operation:

a. The eight radial struts of the inlet housing.

b. Compressor air inlet temperature probe anti–icer.

c. Compressor air inlet anti–icing vane assembly.

d. Lower half of torquemeter anti–icing shroud.

e. Engine air intake.

36. The anti–icing system consists of an anti–icing solenoid valve, two anti–icing air valve assemblies, attached tubing and flow lines, and the necessary electrical circuits.

37. The anti–icing solenoid valve, mounted near the front top of the compressor casing, serves as the primary control of the anti–icing system. It controls the position of the two anti–icing air valves. When the solenoid is energized, no anti–icing air flows. When the solenoid is de–energized, anti–icing air flows to those engine components which require hot air to prevent the formation of ice.

38. This system is called a "fail–safe" system because it assures anti–icing air flow in the event of a 28 V DC system failure. "Fail–safe" means that it is much better to have anti–icing air flow even though it is not needed, than it is to require anti–icing air flow and not be able to get it because of an electrical failure.

39. An anti–icing air valve is mounted on each side of the air inlet housing.

40. Anti–icing air line tubes extract hot air from the diffuser and direct it to the anti–icing air valves.

41. The anti–icing air valves each contain a piston valve which is lightly spring–loaded closed. These pistons do not fit tightly in their cylinders, and thus the hot air can leak between the pistons and their cylinders to the spring side of the pistons. The spring side of these pistons is connected to a common line which leads to the anti–icing solenoid valve.

42. When the anti–icing solenoid valve is energized, its ball type valve is seated. Since the air which leaked to the spring side of the pistons cannot escape, the pressure on the spring side of the pistons becomes equal to the pressure at the diffuser; thus, the anti–icing air valves are held closed by air pressure differential on the pistons. Therefore, there is no anti–icing air flow when the anti–icing solenoid valve is energized.

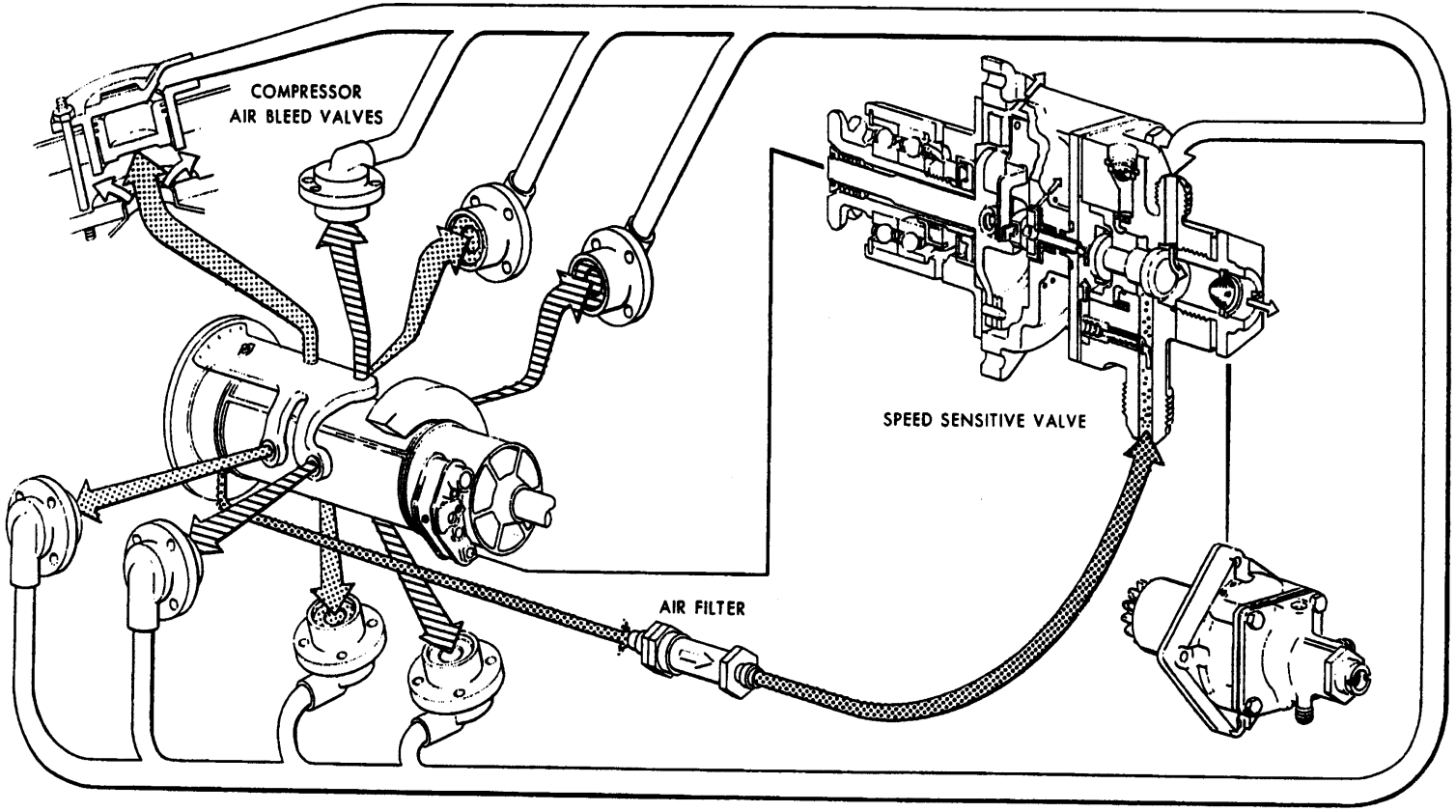

14TH STAGE COMPRESSOR AIR PRESSURE

10TH STAGE COMPRESSOR AIR PRESSURE

5TH STAGE COMPRESSOR AIR PRESSURE

VENT TO ATMOSPHERE

Figure 3. Compressor Bleed Valve System

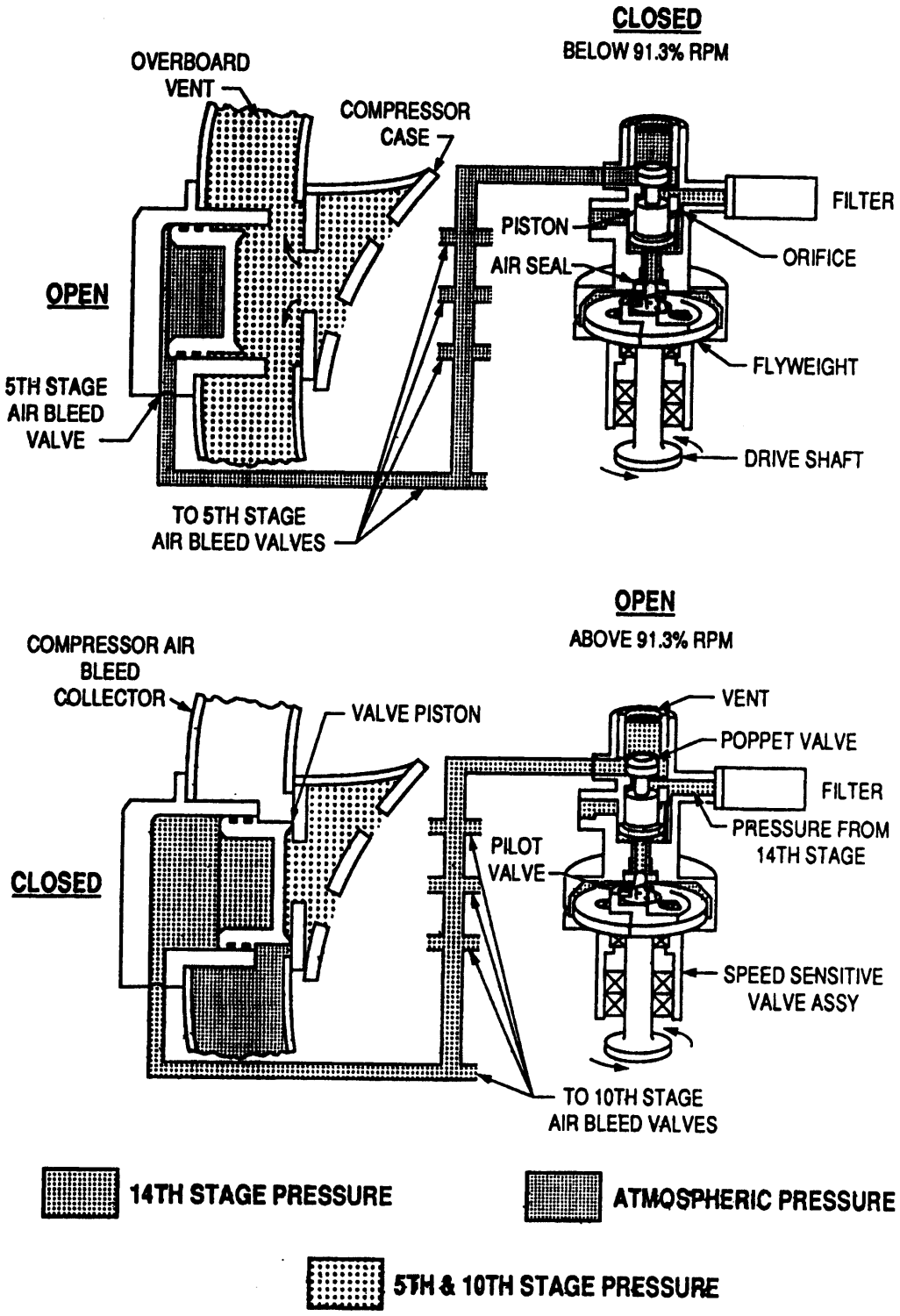

Figure 4. Compressor Bleed Valve Operation Schematic

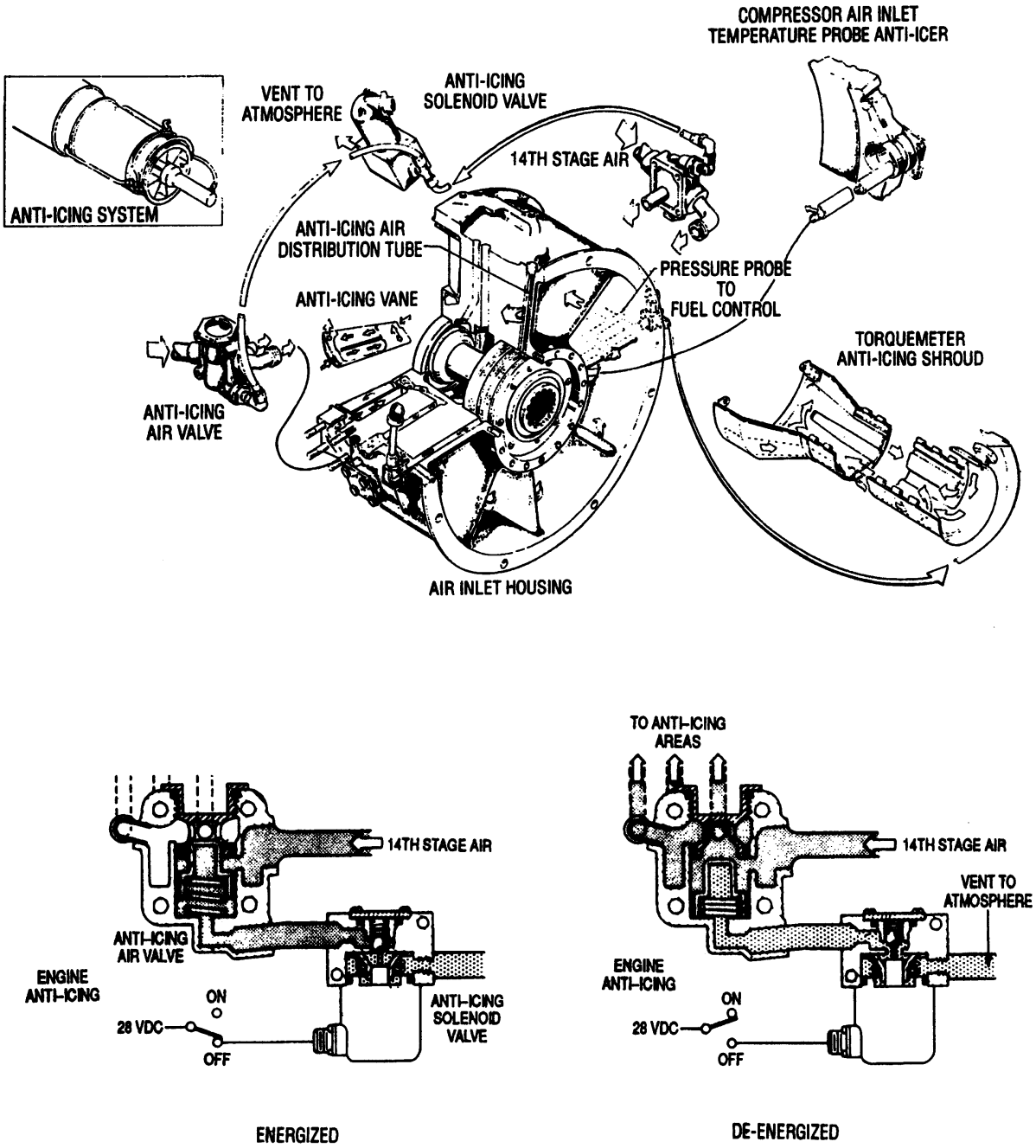

Figure 5. Anti-Icing System

43. When the anti–icing solenoid valve is de–energized, its ball type valve is moved open by a spring which is in the anti–icing solenoid valve assembly. Another spring, which is weaker, is used to prevent “chattering” of the ball valve. With the anti–icing solenoid ball type valve open, the air, which leaks to the spring side of the piston in the anti–icing valves, is vented to the nacelle; thus, the pressure on the spring side of the piston becomes equal to nacelle pressure.

44. From the outer shell, the anti–icing air is directed through the internal passages to:

a. The compressor air inlet temperature probe anti–icer.

b. Air annulus at the outer rim of the compressor air inlet anti–icing vane assembly.

c. Air anulus at the inner rim of the compressor air inlet anti–icing vane assembly.

d. Drilled passages in the leading edge of the two horizontal struts to an annulus in the inner bore of the air inlet housing inner shell.

45. The air annulus in the inner bore is formed by the air inlet housing and the compressor extension shaft housing. From the air annulus in the inner shell, the anti–icing air is directed to drilled passages in the outer six air inlet housing radial struts.

46. Anti–icing tubes in these six struts assure anti–icing air flow through the entire length of the struts. The compressor air inlet pressure probe in the left horizontal strut of the air inlet housing is heated by conduction.

47. The hot air, directed to the inner and outer annuli of the compressor air inlet anti–icing vane assembly, flows into the vanes which are hollow, and then flows out of the vanes through small slots in the trailing edges.

48. An internal cored passage interconnects the two sides of the air inlet housing to equalize pressures and to assure equal distribution of the anti–icing air.

49. A flexible line, connected to the internal cored air balance passage elbow on the left side of the air inlet housing, directs anti–icing air to the lower half of the torquemeter anti–icing shroud.

INTERMEDIATE MAINTENANCE

DESCRIPTION AND PRINCIPLES OF OPERATION

ENGINE MONITORING SYSTEM

Reference Material

None

Alphabetical Index

Subject — Page No.

Digital Electronic Trim Control (DETC) 3
Engine Analyzer Unit (EAU) 3
Engine Hardware 2
Engine Monitoring System (EMS) 2
Ground Station 4
Hand–Held Maintenance Terminal (HMT) 4
- Change Mode 6
- Display Mode 6
- Exceedance Mode 6
- HMT Operation 4
- Menu Mode 4

Tape Transport Cartridge (TTC) 3
Test Cell Warning Lights 3
Total Temperature/Pressure Sensor Assembly (CDT/CDP Probe) 2
Vibration (GVIB, CVIB, TVIB) Sensing 2
Weight on Wheels (WOW) Switch 3

Record of Applicable Technical Directives

None

1. **ENGINE MONITORING SYSTEM (EMS).**

a. The EMS is comprised of the following:

(1) Engine hardware

(2) Test cell hardware:

(a) Engine Analyzer Unit (EAU)

(b) Tape Transport Cartridge (TTC) (EAU versions 5.1 and earlier).

(c) PC Card (EAU versions 6.1 and later).

(d) Hand–held Maintenance Terminal (HMT).

(3) Ground station.

b. Engine hardware is comprised of specialized EMS dedicated sensors, the Digital Electronic Trim Control (DETC), and the engine harness. Test cell hardware is comprised of wiring, special switches, the EAU, and the TTC.

c. The ground station is a ground on–site unit that provides detailed post–flight data processing.

d. The HMT is a portable, hand–held device that can be electrically connected to the DETC, or to the EAU with the HMT cable. The HMT is used for flight line maintenance and data interrogation of the EAU.

2. **ENGINE HARDWARE.**

a. Engine hardware is used to relay primary engine parameters to the EAU. There are 12 engine parameters; five are monitored by EMS dedicated sensors, and the remaining seven parameters are monitored by the DETC.

b. The following five parameters are monitored by EMS dedicated sensors:

(1) Compressor Discharge Temperature (CDT)

(2) Compressor Discharge Pressure (CDP)

(3) Vibration pickup (accelerometer)–reduction gear (GVIB)

(4) Vibration pickup (accelerometer)–compressor inlet housing (CVIB)

(5) Vibration pickup (accelerometer)–rear turbine support case (TVIB).

c. The following seven parameters are monitored by the DETC:

(1) Turbine outlet pressure (PS7)

(2) Turbine Measured Temperature (TMT)

(3) Compressor Inlet Temperature (CIT)

(4) Compressor Inlet Pressure (CIP)

(5) Revolutions per minute (rpm)

(6) Horsepower (hp)

(7) Power Level Angle (PLA).

3. **TOTAL TEMPERATURE/PRESSURE SENSOR ASSEMBLY (CDT/CDP PROBE).**

a. Compressor Discharge Temperature (CDT) and Compressor Discharge Pressure (CDP) are monitored through a special dedicated combination probe mounted on the engine diffuser.

b. The pressure sensing portion of the probe is a multi–depth probe with a tube fitting connection on the outer mounting flange, to which a pressure transducer is connected that averages total compressor discharge pressure.

c. The temperature sensing portion of the probe is a resistance–type element positioned inside the probe body to protect it from flow path airborne debris.

d. These sensors are four–wire Resistive Temperature Device (RTD) probes.

e. Software in the EAU senses oscillations in the CDP and can determine if a surge condition exists. It can then denote this as an event on the TTC.

4. **VIBRATION (GVIB, CVIB, TVIB) SENSING.**

a. The dedicated vibration pickups chosen for the EMS are miniature self–generating Piezo–electric accelerometers. The accelerometer output signal has a very high impedance that requires special cabling and charge amplifiers for proper signal conditioning. The EAU measures the frequency spectrum of the vibration signals. EAU versions 5.1 and earlier measure the frequency spectrum range from 15 to 1600 Hz. (The vibration frequency report contained in the ground stations provides the details of the frequency coverage. Three accelerometers are located on each engine.

b. One accelerometer is mounted on the reduction gear at the nine o'clock position on the aft face of the rear case. A second accelerometer is mounted on the compressor air inlet housings at approximately the three o'clock position.

c. A final accelerometer is mounted on the rear turbine bearing support at approximately the three o'clock position. This accelerometer is mounted on a bolted–on pad and is exposed to temperatures up to 600°F. A special high–temperature accelerometer is required for this application.

5. **DIGITAL ELECTRONIC TRIM CONTROL (DETC).**

a. The DETC provides parameters to the EAU. The DETC can be in one of three modes (controlling, limiting, or off). The EAU documents which mode the DETC is operating in by recording on tape the appropriate DETC status words.

b. Seven parameters are received by the EAU from the DETC for EMS use. The EAU is a "receive only" device which provides protection against signal/noise transfer to the DETC units. The DETC parameters that are sent to the EAU are as follows:

(1) Turbine outlet pressure (PS7)

(2) Turbine Measured Temperature (TMT)

(3) Power Lever Angle (PLA)

(4) Compressor Inlet Pressure (CIP)

(5) Compressor Inlet Temperature (CIT)

(6) Additional magnetic pickup in torquemeter pickup assembly (N1)

(7) Additional magnetic pickup in torquemeter pickup assembly (N2).

c. Other information received includes DETC failure data and status words from the DETC's self–test logic that checks the health of all input signals and particular discrete components of the control system.

d. Declaration of a failure indicates fault logic that records the failure on both the EAU's tape transport cartridge (TTC) and nonvolatile memory. Real–time data readout is possible by the HMT from either the EAU or the DETC through the prop test box.

6. **WEIGHT ON WHEELS (WOW) SWITCH.**

a. The WOW switch is a toggle type switch located on the EAU/HMT rack of the turbo prop engine test stand (TPETS). When the switch is closed, the rack supplies 28 V DC to the EAU indicating the aircraft is on the ground or that weight is on the wheels. Opening the switch, removing the 28 V DC, indicates to the EAU the aircraft is flying.

b. The EAU indicates the condition of the WOW switch in the data by tripping a specific bit, i.e., lift–off and end–of–flight.

7. **TEST CELL WARNING LIGHTS.**

a. Two test cell warning lights are located on the advisory/caution panel. One light indicates to the operator that the EAU is recording high vibration (EAU VIB light). The second light indicates that the EAU is recording a low power condition (EAU low power light).

8. **ENGINE ANALYZER UNIT (EAU).**

a. The EAU is mounted in the test cell and connected to test cell wiring.

b. The EAU is designed to operate from 16 to 29 V DC power.

c. An internal real–time clock is incorporated into the EAU. This internal clock maintains the time of day, and the Julian Date which is alterable via the HMT. The time and date is internally supported for a minimum of 720 hours via a lithium battery in the EAU.

d. On the face of the EAU are three maintenance advisory flags (EMS FAULT, MAINTENANCE ADVISORY, and TAPE FULL) which indicate to the maintenance personnel that action is to be taken concerning the data recorded during the test. The flags are electromagnetically tripped and may only be reset manually. The flags are normally displayed black and when tripped display white. The flags should be checked upon completion of each test or when the tape is being removed.

e. The five dedicated EMS sensors send a signal directly to the ECU.

9. **TAPE TRANSPORT CARTRIDGE (TTC).**

a. Data records are stored on a Magnetic Tape Loader (MTL), which is an integral part of the EAU. The TTC is inserted into a slot provided by the tape cradle located on the left–hand side of the EAU just above the J–2 connector.

10. **GROUND STATION.**

a. EMS ground station is a software program that will function on any Windows 98 personal computer (desktop or laptop) that meets the minimum equipment requirements. It is designed to download, validate and analyze data recorded by the EAU. The ground station will be used for both shipboard and land–based operations. (See figure 1.) The ground station hardware will operate in any environment where PC's typically operate.

b. The primary functions of the ground station are as follows:

(1) Data transfer, validation and conversion to engineering units.

(2) Diagnostic analysis of downloaded data.

(3) Trend depiction of downloaded data.

(4) Performance analysis of downloaded data.

(5) Full flight data storage and database entry.

(6) Aircraft operational monitoring and analysis of downloaded data.

(7) Flight, engine or aircraft data export and/or import.

(8) Hardcopy printout.

c. Major components of the ground station are as follows:

(1) Personal computer (Windows 98 v2 or better).

(2) Software program CD.

(3) Tape interface unit.

(4) Printer.

(5) Tape transport cartridge.

(6) PCMCIA Flash Memory card (PC Card).

11. **HAND–HELD MAINTENANCE TERMINAL (HMT).**

12. The HMT is an instrument used to view parameters from the DETC or EAU on a real–time basis. The HMT display is updated only once per second even though the data is sampled and processed at a faster rate. The HMT can be used to interrogate the EAU and control several of the tape and PC Card functions. The EAU may be accessed by the HMT via the J–2 connector located on the lower left–hand corner of the front face of version 5.1 and earlier EAU's and on the lower right–hand side of the front face of version 6.1 and newer EAU's.

13. Interfacing with the EAU is accomplished with the HMT connected to the J–2 connector. Four preprogrammed screens of the most frequently viewed parameters are accessible on the HMT digital display by entering the menu mode and selecting the desired screen. All engine parameters available to the EMS can be viewed by selecting the display mode and then entering the correct digital code for that parameter. The HMT is required for initializing the EAU when installed into an aircraft or when updating the installed engine data when an engine is changed.

14. HMT Operation.

a. The HMT sets up, controls, and displays data associated with the EMS. There are four basic modes of operation:

(1) Menu mode

(2) Display mode

(3) Change mode

(4) Exceedance mode.

15. Menu Mode.

a. The menu mode may be accessed by pressing the MENU function key on the HMT.

b. The EAU menu mode provides a total of four screens:

(1) First and second screens (left and right engine):

(a) % RPM

(b) CDP

(c) HP

(d) CDT

(e) CIT

(f) TMT

(g) PS7.

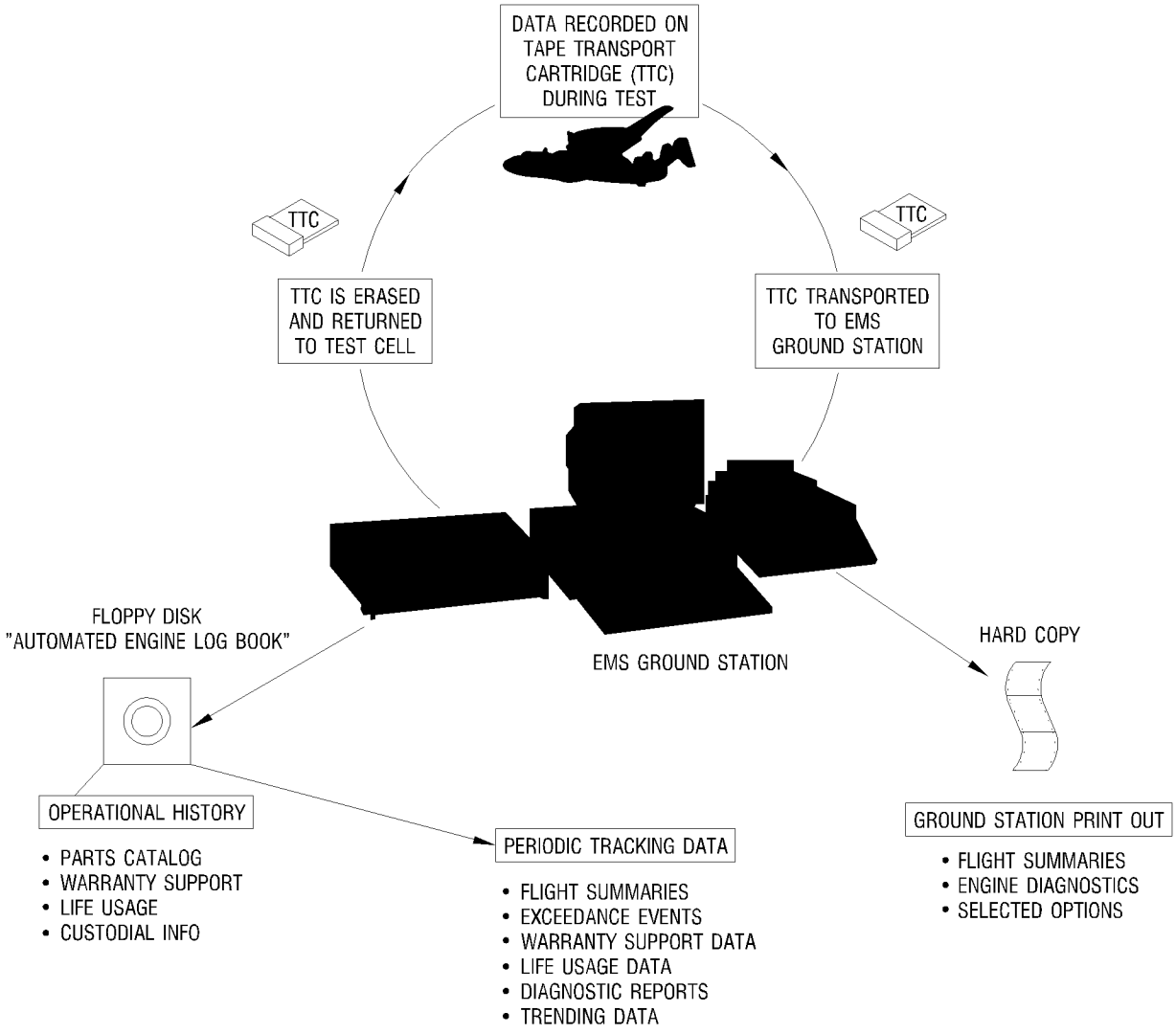

Figure 1. EMS Flight Data Flow.

(2) Third screen (both engines):

(a) HPC

(b) HPR

(c) % RPM

(d) CTMT.

(3) Fourth screen (both engines):

(a) CVIB

(b) GVIB

(c) TVIB

(d) % RPM.

c. Upon entering the menu mode, the last displayed menu HMT key is pressed and the next menu is displayed. The EAU continually (at a one–second update rate) refreshes the current display, showing the current values of the parameters labelled on the screen for both engines.

16. Display Mode.

a. The HMT display mode allows the viewing of any four EMS parameters. The HMT displays the one–second average and is updated once per second. The display mode may be entered by pressing the HMT ESCAPE key. To select a parameter for display on the HMT, the appropriate number keys (0 thru 9) are pressed corresponding to the desired parameter and then the ENTER key is pressed.

b. To select the CDP parameter, press keys 1, 2, 6, and then press ENTER. When the ENTER key is pressed, the BKSP key and SPACE key may be used to correct any sequence being keyed.

17. Change Mode.

a. The change mode is used to modify the current values of parameters being stored in the EAU nonvolatile memory. The EAU supports a total of 21 multikey change mode commands.

b. To enter the change mode, press the HMT change function key. The message “WHAT PARAMETER” is then displayed. Key in the appropriate parameter number sequence. When the ENTER key is pressed, the current value of the parameter is then displayed and may be modified as desired.

c. The CLEAR key will zero the parameter if pressed while in this mode. The SPACE and BACKSPACE HMT keys may be used to modify individual digits of the parameter.

d. When a new value has been entered, press the ENTER Key. In response, the message ”ARE YOU SURE” is then displayed. If the YES key is pressed, the parameter value input is verified for the proper range limits and the new value is then entered into EAU nonvolatile memory. If the parameter is out of range, an error message is output to indicate that fact. The value may then be reentered.

e. If the NO key is pressed, no action is taken on the parameter. If any other key except the YES or NO key is pressed, an error message will be displayed.

18. Exceedance Mode.

a. The exceedance mode is used to display the current state of the last 10 exceedances being monitored by the EMS. There are a total of 21 exceedances being monitored by the EAU. Each exceedance utilizes the entire HMT display.

b. Each exceedance display provides the following information:

(1) The type of exceedance (each exceedance is assigned a unique number)

(2) Start time (day, hours, and minutes when the exceedance started)

(3) Text line which defines in English the exceedance type (i.e., for the TMT exceedance, the word “TMT” appears on this line)

(4) Time duration of the exceedance (hours, minutes, and seconds)

(5) The peak value of a parameter associated with the exceedance

(6) The number of occurrences (persistence count) for that exceedance.

c. If no exceedances have been detected, then the message “NO EXCEEDANCES” is displayed when the exceedance function key is pressed. There are two basic functions performed in the exceedance mode.

d. The first is to view the exceedance and the second is to clear the exceedance.

e. Exceedances may be viewed by pressing the exceedance function key. Each time the key is pressed, the next exceedance recorded within the EAU is displayed.

f. To clear the currently displayed exceedance, the CLEAR key must be pressed. A confirmation message is then displayed asking “ARE YOU SURE”. If the YES key is pressed, then that exceedance is cleared and the next exceedance is displayed.

g. If the NO key is pressed, the exceedance is left unchanged and the next exceedance is displayed.

h. If any other key is pressed, the error message “PRESS Y/N KEY” is displayed on the HMT.

INTERMEDIATE MAINTENANCE

STANDARD PRACTICES

SAFETY PRECAUTIONS

Reference Material

None

Alphabetical Index

Subject Page No.

Introduction 2

Safety Precautions–Hazardous Materials 2

Compressed Air 2

Heated Parts 2

Super–chilled Parts 2

Record of Applicable Technical Directives

None

1. **INTRODUCTION.**

2. All safety precautions contained in this WP appear, or are referenced at first point of application in WPs throughout this manual; explanation of usage is as follows:

WARNING

Refers to a procedure or practice that, if not correctly followed could result in injury, death or long term health hazard.

CAUTION

Refers to a procedure or practice that, if not correctly observed, could result in damage to or destruction of equipment.

NOTE

Refers to a procedure or condition that requires emphasis. It is essential that warnings, cautions and notes are understood and applied before, and during all phases of operation and maintenance.

3. **SAFETY PRECAUTIONS–HAZARDOUS MATERIALS.**

4. COMPRESSED AIR.

WARNING

Use approved goggles or face shield when using compressed air for cleaning, cooling or drying. Air pressure shall not exceed 30 psig. Compressed air shall not be directed towards self or other persons.

5. HEATED PARTS.

WARNING

Heated parts will cause skin damage (burns). Use clean insulated gloves to handle parts.

6. SUPER–CHILLED PARTS.

WARNING

Super–chilled (frozen parts) will cause freezer burn. Use clean insulated gloves to handle dry ice and frozen parts.

INTERMEDIATE MAINTENANCE

STANDARD PRACTICES

COMPONENT MARKING AND TIME CODING

Reference Material

Periodic Maintenance Information Cards (PMIC) . . . . . NAVAIR 01–E2AAA–6

Alphabetical Index

Subject Page No.

Life Limited Parts 2

Parts Service Time Coding 2

Record of Applicable Technical Directives

None

1. **PARTS SERVICE TIME CODING.**

a. Code mark service time on functionally important parts (refer to tables 1 and 2). Part time coding is used so that accumulated time is readily available in determining part life expectancy.

b. Time code parts listed in table 2 when replaced during maintenance. Mark the parts as soon after disassembly as practicable.

c. Use the following marking procedure.

CAUTION

The controlled engraving method is a permanent marking which is cut or pressed into the part with a suitable round–nose tool. A rotating cutter or axial vibrating needle (vibro–etch) may be used. Depth of impression must not exceed 0.002 inch. Do not make the code symbols within 0.20 inch of any radius, blending, or stress riser area. If space is limited, a character size of 1/8 inch is recommended.

(1) Use the controlled engrave (vibro–etch) marking method for part time coding.

(2) The pencils, fine tip and wide tip markers in table 3 are approved for marking iron, nickel and cobalt base alloys which are exposed to temperatures above 800°F (427°C) either by heat treatment or engine operation. Markings on those alloys do not have to be removed from the parts prior to heating above 800°F (427°C). These pencils and markers are also approved for marking titanium alloys providing the markings are removed prior to exposure of the parts to temperatures above 500°F (260°C) by heat treatment or engine operation.

(3) The ball point metal marker listed in table 3 is approved for marking on iron, nickel and cobalt base alloys and on titanium alloys. Markings on these alloys do not have to be removed prior to exposure to temperatures above 500°F (260°C).

(4) Mark parts so that the accumulated hours can be added to obtain the total hours of service.

(5) Use the following symbols for time coding the parts.

(a) The “V” denotes a new part added at any activity other then depot maintenance.

(b) The “X” denotes a new part added at depot maintenance.

(6) Time code all parts removed, scrapped, and replaced as follows:

(a) Mark a “V” on replacement part.

(b) Record total time on part removed.

(7) Time code as necessary, any part or assembly listed in table 2 as follows when removed or replaced at intermediate maintenance and placed on serviceable status:

(a) A part or assembly removed, repaired, and reinstalled in the same unit requires no time code marking.

(b) Time code a part or assembly removed, repaired, and installed in a different unit, with TSLO (Time Since Last Overhaul) and “V”. Refer to table 1.

(c) Time code with time since last overhaul when part or assembly is removed and returned to depot maintenance.

2. **LIFE LIMITED PARTS.**

a. Refer to applicable PMIC deck for maximum operating times of life limited parts.

Table 1. Time Coding on Parts

Code	Hours	Code	Hours
V	1– 50	11	1051–1150
1	51– 50	12	1151–1250
2	151– 250	13	1251–1350
3	251– 350	14	1351–1450
4	351– 450	15	1451–1550
5	451– 550	16	1551–1650
6	551– 650	17	1651–1750
7	651– 750	18	1751–1850
8	751– 850	19	1851–1950
9	851– 950	20	1951–2050
10	951– 1050	21	2051–2150

Marking time beyond 2150 hours shall be in increments of 100 hours with each added number.

Table 2. Location for Service Time Code

Assembly		Time Code (TC) Location
Compressor Section		
	Bearing–Front Bearing–Rear	Serial number side of outer ring. Serial number side of outer ring.
	Diffuser	Top of diffuser on front flange.
Reduction Gear		
	Bearing–Main Drive Gear	Serial number side of outer ring.
	Bearing–Planet Rear Carrier, Roller	Serial number side of outer ring.
	Bearing–Pinion Gear Front	Serial number side of outer ring.
	Bearing–Pinion Gear Rear	Serial number side of outer ring.
	Bearing–Propeller Shaft, Ball	Serial number side of outer ring.
	Bearing–Propeller Shaft, Roller	Serial number side of outer ring.
	Carrier–Planet Rear	Rear side of flange (6:30 position).
	Gear–Main Drive Reduction	On the ID flange face.
	Gear and Bearing–Planet	Front face of gear on flat.
	Shaft–Propeller	Front side of flange (6:30 position).
Turbine Unit		Flat OD surface of vane casing, rearward of front spline line.
	Adapter–Coupling	Inside chamfer.
	Bolt–Turbine to Compressor Tie	Between first and second lands.
	Bearing–Front Bearing–Rear	Serial number side of outer ring.
	Casing–Inlet	OD of casing in same area of permanent identification.
	Rotor	Rear face of fourth–stage wheel hub.
	Spacers–Rotor	Front face of spacer web on the flared surface.
	Support–Rear Bearing	OD of support at the top.
	Wheels–First, Second, and Third–Stage	Inside of curvic hub (same surface as part number.)
	Wheel–Fourth–Stage	Front side of wheel, between web and hub.
Torquemeter		On safety coupling adjacent to the serial number.

Table 3. Marking Materials and Manufacturer

Manufacturer	Trade Name	No.	Color	Manufacturer Address
Pencils				
A. W. Faber (1)	The Winner	2383	Dark Green	(1) Faber–Castell Corp.
A. W. Faber (1)	The Winner	2388	White	41 Dickerson St.
A. W. Faber (1)	The Winner	2462	Silver	Newark, NJ 07103–2809
Berol Corp (2)	Eagle Verithin	745	Carmine Red	
Berol Corp (2)	Eagle Verithin	751	True Green	(2) Berol USA
Berol Corp (2)	Eagle Verithin	734	White	Danbury Plant
Berol Corp (2)	Eagle Verithin	758	True Blue	Eagle Road
Berol Corp (2)	Eagle Verithin	737	Orange	Danbury, CT 06810
Berol Corp (2)	Eagle Verithin	753	Silver	
Eberhard Faber (3)	Colorbrite	2101	Silver	(3) Eberhard Faber Inc.
Koh–I–Noor (4)	Flexicolor	1800–25	Blue	Wilkes–Barre, PA 18707
Venus(5)	Unique	1206	Blue	
Venus(5)	Unique	1237	Carmine Red	(4) Koh–I–Noor Radiographic Inc.
Venus(5)	Unique	1215	White	100 North Street
Joseph Dixon	Best Red	349	Red	Bloomsbury, NJ 08804
Crucible Co.			(fluorescent)	
				(5) Markal Co.
Fine Tip Markers				250 N. Wasnenaw Ave.
Berol Corp (2)	Flash 30		Red	Chicago, IL 60612
Berol Corp (2)	Flash 30		Blue	
Lindy Pen Co. Inc.	Lindy		Green	(6) Irwin–Hodson Co.
Lindy Pen Co. Inc.	Lindy		Blue	Nineth & S.E. Woodward
				Portland, OR 97202–2509
Wide Tip Markers				
Berol Corp (2)	Eagle Marker	8835	Black	
Berol Corp (2)	Eagle Marker	8824	Red	
Berol Corp (2)	Eagle Marker	8802	Blue	
Berol Corp (2)	Eagle Marker	8816	Yellow	
Blaisdell	Liquid Tip	1100	Black	
Blaisdell	Liquid Tip	1100	Red	
Marking Ink				
Irwin–Hodson (6)	Dri–Marquette		Black Ink	
Ball Point Metal Markers				
Big Three Industries	Pyromarker		White	

INTERMEDIATE MAINTENANCE

STANDARD PRACTICES

CLEANING AND CORROSION TREATMENT

Reference Material

Maintenance of Aeronautical Antifriction Bearings	NAVAIR 01-1A-503
Aircraft Weapons System Cleaning and Corrosion Control Instructions	NAVAIR 01-1A-509
Cleaning Materials	NAVAIR 07-1-503
Turbine Engine Cleaning Instructions	NAVAIR 07-1-504
Chemical Conversion Coating on Aluminum Alloys	MIL-C-5541

Alphabetical Index

Subject	Page No.
Cleaning After Disassembly	2
Aluminum Coated Ferrous Parts	4
Bearing Cleaning	2
Ferrous Parts	3
Magnesium Reduction Gear Housings	4
Non-Ferrous Parts	3
Corrosion Treatment	5
Aluminum Alloy Parts	6
Aluminum Coated Steel Parts	7
Magnesium Alloy Parts	5

Record of Applicable Technical Directives

None

1. **CLEANING AFTER DISASSEMBLY.**

a. Be sure metals are separated prior to cleaning. Cleaners for ferrous parts will damage nonferrous and aluminum-coated ferrous parts. Identify aluminum-coated ferrous parts by the magnetic properties they exhibit as opposed to nonmagnetic stainless steel.

b. Follow applicable cleaning procedures in NAVAIR 01-1A-503, 01-1A-509, 07-1-503, and 07-1-504 unless otherwise specifically stated in this WP.

c. Clean all removed parts to a condition that is adequate for handling and visual inspection.

2. BEARING CLEANING.

Materials Required

Specification No./Part No.	Nomenclature
MIL-C-25107	Compound, carbon removing
MIL-PRF-23699	Oil, lubricating
MIL-PRF-680, Type II	Solvent, dry cleaning
TT-T-291	Thinner, paint, mineral spirits

a. Bearings not disassembled from shafts and shaft gears will not require cleaning unless inspection indicates possible defects.

Dry Cleaning Solvent
MIL-PRF-680, Type II **3**

b. Immerse in a tank of MIL-PRF-680, Type II cleaning solvent, for 10 minutes.

Paint Thinner TT-T-291 **4**

c. Spray wash bearings with TT-T-291 mineral spirits.

d. Dry with filtered compressed air.

Lubricating Oil, MIL-PRF-23699 **2**

e. If bearing is not to be inspected immediately (within one hour), coat with MIL-PRF-23699 engine oil.

NOTE

When the above procedure does not remove carbon or other deposits on bearings, additional cleaning should be accomplished. Light brown or light blue oil varnish stain may be found. These stains do not require removing.

f. Carbon Removal.

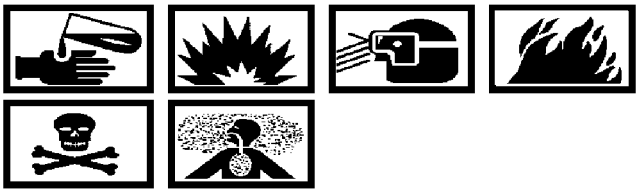

Carbon Removing Compound
MIL-C-25107 **1**

(1) Immerse bearings in MIL-C-25107 carbon removing compound.

(2) Clean in accordance with preceding steps c through e.

Lubricating Oil, MIL-PRF-23699 **2**

g. After cleaning, bearings shall be lubricated with a light film of MIL-PRF-23699 oil.

3. FERROUS PARTS.

Materials Required

Specification No./Part No.	Nomenclature
Envirosolv CRX-2-5313	Compound, cleaning
MIL-C-6529, Type 1	Compound, rust preventive
MIL-PRF-6081, Grade 1010	Oil, lubricating
TT-T-291	Thinner, paint, mineral spirits

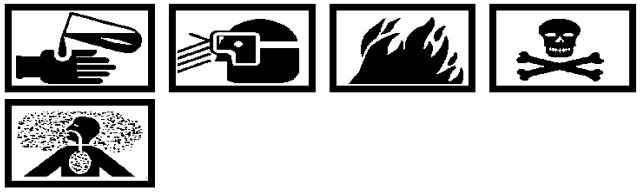

Dry Cleaning Solvent Envirosolv CRX–2–5313 **5**

a. Clean with Envirosolv CRX-2-5313.

Paint Thinner TT–T–291 **4**

b. Rinse with water, and spray with TT-T-291 mineral spirits.

WARNING

Use approved goggles or face shield when using compressed air for cleaning, cooling or drying. Air pressure shall not exceed 30 psig. Compressed air shall not be directed towards self or other persons.

c. Dry with filtered compressed air.

Corrosion Preventive Compound MIL–C–6529 **6**

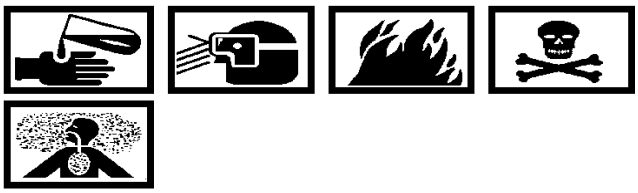

Lubricating Oil, MIL–PRF–6081, (Grade 1010) **7**

d. Treat steel parts with a rust preventive compound: one part MIL-C-6529, Type 1, and three parts MIL-PRF-6081, Grade 1010 oil.

4. NON-FERROUS PARTS.

Materials Required

Specification No./Part No.	Nomenclature
Envirosolv CRX-2-5313	Compound, cleaning
Isoprep	Metal cleaner, silicate soap
MIL-PRF-680, Type II	Solvent, dry cleaning

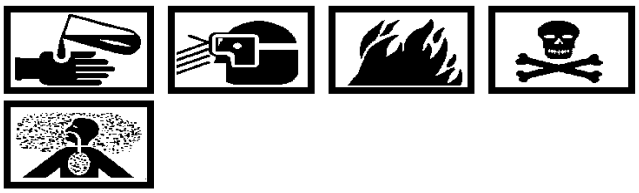

Dry Cleaning Solvent MIL–PRF–680, Type II **3**

Dry Cleaning Solvent (Isoprep) **8**

Dry Cleaning Solvent Envirosolv CRX–2–5313 **5**

a. Clean non-ferrous parts using MIL-PRF-680, Type II, MIL-PRF-680, Type III cleaning solvents, MIL-M-7752 soap, and Envirosolv CRX-2-5313 cleaner. Do not apply rust preventatives on magnesium or aluminum parts.

Dry Cleaning Solvent (Isoprep) 8

Dry Cleaning Solvent Envirosolv CRX–2–5313 5

b. Rinse parts with water after using MIL-M-7752 soap or Envirosolv CRX-2-5313 cleaner.

WARNING

Use approved goggles or face shield when using compressed air for cleaning, cooling or drying. Air pressure shall not exceed 30 psig. Compressed air shall not be directed towards self or other persons.

c. Dry with filtered compressed air.

5. ALUMINUM COATED FERROUS PARTS.

Materials Required

Specification No./Part No.	Nomenclature
MIL-C-25107	Compound, carbon removal

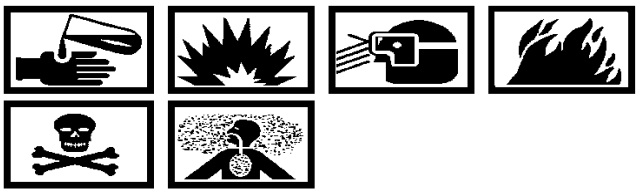

Carbon Removing Compound MIL–C–25107 1

a. Clean by submerging parts in MIL-C-25107 compound until varnish and burnt oil stains are removed.

b. Flush parts with clean water.

WARNING

Use approved goggles or face shield when using compressed air for cleaning, cooling or drying. Air pressure shall not exceed 30 psig. Compressed air shall not be directed towards self or other person.

c. Dry with filtered compressed air.

6. MAGNESIUM REDUCTION GEAR HOUSINGS.

Materials Required

Specification No./Part No.	Nomenclature
MIL-C-85043	Cloth, cleaning, low lint
MIL-T-81533	Trichloroethane, 1,1,1, (methyl chloroform) inhibited, vapor degreasing
---	Gloves, insulated

Solvent, Cleaning, Trichloroethane MIL–T–81533 9

a. Remove bearing cages and degrease housings using MIL-T-81533 trichloroethane.

b. Rinse in cold water to cool housings.

c. While part is still wet, rub painted surface with wet, soft cloth to remove stains.

d. Water rinse.

WARNING

Use approved goggles or face shield when using compressed air for cleaning, cooling or drying. Air pressure shall not exceed 30 psig. Compressed air shall not be directed towards self or other persons.

e. Hot water rinse and blow dry with filtered compressed air.

f. Dichromated magnesium surface areas with white powder residue can be buffed out with a dry, soft cloth.

g. Reinstall bearing cages.

7. **CORROSION TREATMENT.**

8. MAGNESIUM ALLOY PARTS.

Materials Required

Specification No./Part No.	Nomenclature
MIL-PRF-23377	Coating, High Solids Epoxy Primer
MIL-PRF-85285	Coating, Polyurethane
MIL-PRF-85582	Primer Coating, Epoxy, Waterborne
AMS-M-3171, Type VI (Dow 19)	Solution, chromic pickling
R-671 (Dow)	Resin, silicone

Sodium Dichromate Magnesium Treatment (Chrome Pickle) AMS-M-3171, Type VI (Dow 19) **12**

a. Treat damaged (bare metal) areas using AMS-M-3171, Type VI (Dow 19) chromic pickling solution.

NOTE

Either High Solids Epoxy Primer Coating, MIL-PRF-23377, or Waterborne Epoxy Primer Coating, MIL-PRF-85582, and Polyurethane Coating, MIL-PRF-85285, may be used for touch-up repair of damaged paint on the reduction gearbox housing.

The surface to be coated must be clean and free of oil.

b. If using Waterborne Epoxy Primer Coating, MIL-PRF-85582, and Polyurethane Coating, MIL-PRF-85285, apply as follows:

CAUTION

If distilled or deionized water is specified, do not add tap water. Tap water will have an adverse effect on film properties. Only add the specified amount of water. Do not add excessive water. Never mix materials from different manufacturers.

(1) Waterborne Epoxy Primer Coating, MIL-PRF-85582, is supplied as a two component kit which requires mixing. Consult manufacturer's instructions for proper mixing procedures.

NOTE

In general, the pot life of waterborne epoxy primer coating is four hours. During hot or humid conditions, the pot life will decrease. Only mix the amount of material that can be used within two hours. Do not add thinner or water to attempt to compensate for coatings beyond useful pot life.

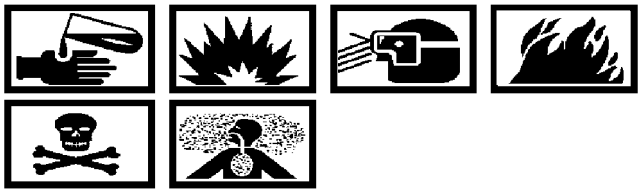

Primer Coating, Epoxy, Waterborne MIL-PRF-85582 **61**

(a) Apply one coat of Waterborne Epoxy Primer Coating, MIL-PRF-85582, to repair area. Allow to air dry for a minimum of two hours. The total dry film thickness of the applied primer coating shall be 0.6 to 0.9 mils. Primer coating must be continuous, uniform, and free from bubbles, pinholes, runs, sags, and other surface imperfections.

CAUTION

Do not apply topcoat unless the primer coating is tack free.

(2) Polyurethane Coating, MIL-PRF-85285, is supplied as a two component kit which requires mixing. Consult manufacture's instructions for proper mixing procedures.

NOTE

In general, the pot life of polyurethane topcoat is four hours. During hot or humid conditions, the pot life will decrease. Only mix the amount of material that can be used within two hours. Do not add thinner to attempt to compensate for coatings beyond useful pot life.

Polyurethane Coating MIL-PRF-85285, 38

(a) Apply a light mist coat of Polyurethane Coating, MIL-PRF-85285, to repair area and allow to set thirty to sixty minutes.

(b) Apply a second coat of Polyurethane Coating, MIL-PRF-85285, to repair area. Allow to dry. The total dry film thickness of the applied coating shall be 1.7 to 2.3 mils.

c. If using High Solids Epoxy Primer Coating, MIL-PRF-23377, and Polyurethane Coating, MIL-PRF-85285, apply as follows:

CAUTION

Never mix materials from different manufactures.

(1) Polyamide Epoxy Primer, MIL-PRF-23377, is supplied as a two part component kit which requires mixing. Consult manufacture's instructions for proper mixing procedures. Allow the mixed primer coating to stand for approximately thirty minutes prior to application.

NOTE

In general, the pot life of epoxy primer coating is four hours. During hot or humid conditions, the pot life will decrease. Only mix the amount of material that can be used within two hours. Do not add thinner to attempt to compensate for coatings beyond useful pot life

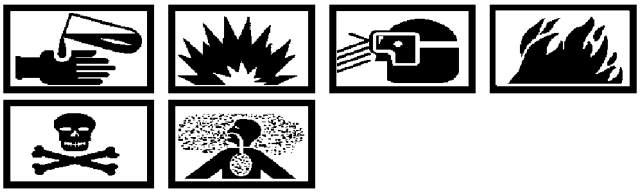

High Solids Epoxy Primer MIL-PRF-23377 15

(a) Apply one coat of High Solids Epoxy Primer, MIL-PRF-23377, to repair area. Allow to air dry for a minimum of two hours. The total dry film thickness of the applied primer coating shall be 0.6 to 0.9 mils. Primer coating must be continuous, uniform, and free from bubbles, pinholes, runs, sags, and other surface imperfections.

CAUTION

Do not apply topcoat unless the primer coating is tack free.

(2) Polyurethane Coating, MIL-PRF-85285, is supplied as a two component kit which requires mixing. Consult manufacturer's instructions for proper mixing procedures.

NOTE

In general, the pot life of polyurethane topcoat is four hours. During hot or humid conditions, the pot life will decrease. Only mix the amount of material that can be used within two hours. Do not add thinner to attempt to compensate for coatings beyond useful pot life

Polyurethane Coating MIL-PRF-85285, 38

(a) Apply a light mist coat of Polyurethane Coating, MIL-PRF-85285, to repair area and allow to set thirty to sixty minutes.

(b) Apply a second coat of Polyurethane Coating, MIL-PRF-85285, to repair area. Allow to dry. The total dry film thickness of the applied coating shall be 1.7 to 2.3 mils.

Silicone Resin R-671 (DOW) 13

d. If damaged area is not in a lubrication oil wetted area, apply two coats of R-671 silicone resin to repair area. Allow to air dry fifteen minutes between coats.

9. ALUMINUM ALLOY PARTS. This procedure covers parts originally painted without anodizing and parts originally anodized and not painted.

Materials Required

Specification No./Part No.	Nomenclature
MIL-PRF-23377	Coating, High Solids Epoxy Primer
MIL-PRF-85285	Coating, Polyurethane
MIL-PRF-85582	Primer Coating, Epoxy, Water-borne
MIL-DTL-81706	Coating, chemical conversion
MIL-T-81533	Trichloroethane, 1,1,1, (methyl chloroform) inhibited, vapor degreasing
O-C-303,Type II	Acid, chromic (Alternate)

a. Repair damaged areas of parts originally painted without anodizing as follows:

Solvent, Cleaning, Trichloroethane MIL-T-81533 9

(1) Clean damaged area using a clean cloth dampened with MIL-T-81533 trichloroethane. Allow to air dry.

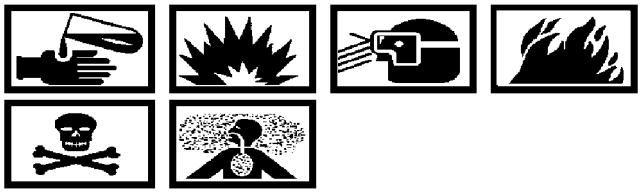

High Solids Epoxy Primer MIL-PRF-23377 15

(2) Apply one coat of High Solids Epoxy Primer MIL-PRF-23377 to repair area. Allow to air dry.

NOTE

Either High Solids Epoxy Primer Coating, MIL-PRF-23377, or Waterborne Epoxy Primer coating, MIL-PRF-85582, and Polyurethane Coating, MIL-PRF-85285, may be used for touch-up repair of damaged paint on the compressor air inlet housing.

The surface to be coated must be clean and free of oil.

b. If using Waterborne Epoxy Primer coating, MIL-PRF-85582, and Polyurethane Coating, MIL-PRF-85285, apply as follows:

CAUTION

If distilled or deionized water is specified, do not add tap water. Tap water will have an adverse effect on film properties. Only add the specified amount of water. Do not add excessive water. Never mix materials from different manufacturers.

(1) Waterborne Epoxy Primer Coating, MIL-PRF-85582, is supplied as a two component kit which requires mixing. Consult manufacturer's instructions for proper mixing procedures.

NOTE

In general, the pot life of waterborne epoxy primer coating is four hours. During hot or humid conditions, the pot life will decrease. Only mix the amount of material that can be used within two hours. Do not add thinner or water to attempt to compensate for coatings beyond useful pot life.

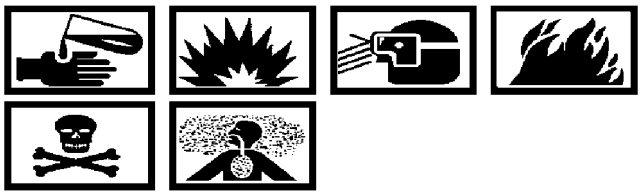

Primer Coating, Epoxy, Waterborne MIL-PRF-85582 61

(a) Apply one coat of Waterborne Epoxy Primer Coating, MIL-PRF-85582, to repair area. Allow to air dry for a minimum of two hours. The total dry film thickness of the applied primer coating shall be 0.6 to

0.9 mils. Primer coating must be continuous, uniform, and free from bubbles, pinholes, runs, sags, and other surface imperfections.

CAUTION

Do not apply topcoat unless the primer coating is tack free.

(2) Polyurethane Coating, MIL-PRF-85285, is supplied as a two component kit which requires mixing. Consult manufacturer's instructions for proper mixing procedures.

NOTE

In general, the pot life of polyurethane topcoat is four hours. During hot or humid conditions, the pot life will decrease. Only mix the amount of material that can be used within two hours. Do not add thinner to attempt to compensate for coatings beyond useful pot life

Polyurethane Coating MIL-PRF-85285, 38

(a) Apply a light mist coat of Polyurethane Coating, MIL-PRF-85285, to repair area and allow to set thirty to sixty minutes.

(b) Apply a second coat of Polyurethane Coating, MIL-PRF-85285, to repair area. Allow to dry. The total dry film thickness of the applied coating shall be 1.7 to 2.3 mils.

c. If using High Solids Epoxy Primer, MIL-PRF-23377, and Polyurethane Coating, MIL-PRF-85285, apply as follows:

CAUTION

Never mix materials from different manufacturers.

(1) High Solids Epoxy Primer, MIL-PRF-23377, is supplied as a two component kit which requires mixing. Consult manufacturer's instructions for proper mixing procedures. Allow the mixed primer coating to stand for approximately thirty minutes prior to application.

NOTE

In general, the pot life of epoxy primer coating is four hours. During hot or humid conditions, the pot life will decrease. Only mix the amount of material that can be used within two hours. Do not add thinner to attempt to compensate for coatings beyond useful pot life

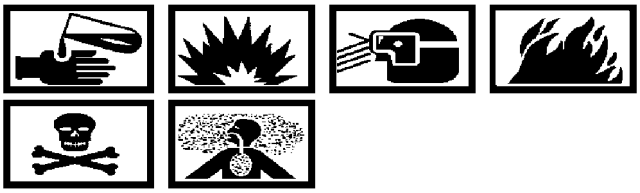

High Solids Epoxy Primer MIL-PRF-23377 15

(a) Apply one coat of High Solids Epoxy Primer, MIL-PRF-23377, to repair area. Allow to air dry for a minimum of two hours. The total dry film thickness of the applied primer shall be 0.6 to 0.9 mils. Primer coating must be continuous, uniform, and free from bubbles, pinholes, runs, sags, and other surface imperfections.

CAUTION

Do not apply topcoat unless the primer coating is tack free.

(2) Polyurethane Coating, MIL-PRF-85285, is supplied as a two component kit which requires mixing. Consult manufacturer's instructions for proper mixing procedures.

NOTE

In general, the pot life of polyurethane topcoat is four hours. During hot or humid conditions, the pot life will decrease. Only mix the amount of material that can be used within two hours. Do not add thinner to attempt to compensate for coatings beyond useful pot life

Polyurethane Coating MIL-PRF-85285, 38

(a) Apply a light mist coat of Polyurethane Coating, MIL-PRF-85285, to repair area and allow to set thirty to sixty minutes.

(b) Apply a second coat of Polyurethane Coating, MIL-PRF-85285, to repair area. Allow to dry. The total dry film thickness of the applied coating shall be 1.7 to 2.3 mils.

d. Repair damaged areas of parts originally anodized and not painted as follows:

(1) Clean damaged area. Refer to paragraph 4, this WP.

(2) Chemically treat repair area in accordance with MIL-PRF-81706. Chromic acid may be used as an alternate.

(3) If coating is powdery, dilute the solution. If no visible coating forms, increases solution concentration or reaction time.

10. ALUMINUM COATED STEEL PARTS. This procedure covers application of corrosion preventative paint to aluminum coated steel parts.

Materials Required

Specification No./Part No.	Nomenclature
MIL-PRF-23377	Coating, High Solids Epoxy Primer
MIL-PRF-85285	Coating, Polyurethane
MIL-PRF-85582	Primer Coating, Epoxy, Water-borne
MIL-T-81533	Trichloroethane, 1,1,1, (methyl chloroform) inhibited, vapor degreasing
---	Brush, stainless steel

Solvent, Cleaning, Trichloroethane MIL-T-81533 **9**

a. Clean damaged areas using MIL-T-81533 trichloroethane and allow to air dry 5-10 minutes. Use a stainless steel brush to clean welds.

b. Mask vent holes.

NOTE

Either High Solids Epoxy Primer Coating, MIL-PRF-23377, or Waterborne Epoxy Primer coating, MIL-PRF-85582, and Polyurethane Coating, MIL-PRF-85285, may be used for touch-up repair of damaged paint. The surface to be coated must be clean and free of oil.

c. If using Waterborne Epoxy Primer Coating. MIL-PRF-85582, and Polyurethane Coating, MIL-PRF-85285, apply as follows:

CAUTION

If distilled or deionized water is specified, do not add tap water. Tap water will have an adverse effect on film properties. Only add the specified amount of water. Do not add excessive water. Never mix materials from different manufacturers.

(1) Waterborne Epoxy Primer Coating, MIL-PRF-85582, is supplied as a two component kit which requires mixing. Consult manufacturer's instructions for proper mixing procedures.

NOTE

In general, the pot life of waterborne epoxy primer coating is four hours. During hot or humid conditions, the pot life will decrease. Only mix the amount of material that can be used within two hours. Do not add thinner or water to attempt to compensate for coatings beyond useful pot life.

Primer Coating, Epoxy, Waterborne MIL-PRF-85582 **61**

(a) Apply one coat of Waterborne Epoxy Primer coating, MIL-PRF-85582, to repair area. Allow to air dry for a minimum of two hours. The total dry film thickness of the applied primer coating shall be 0.6 to 0.9 mils. Primer coating must be continuous, uniform, and free from bubbles, pinholes, runs, sags, and other surface imperfections.

CAUTION

Do not apply topcoat unless the primer coating is tack free.

(2) Polyurethane Coating, MIL-PRF-85285, is supplied as a two component kit which requires mixing. Consult manufacturer's instructions for proper mixing procedures.

NOTE

In general, the pot life of polyurethane topcoat is four hours. During hot or humid conditions, the pot life will decrease. Only mix the amount of material that can be used within two hours. Do not add thinner to attempt to compensate for coatings beyond useful pot life

Polyurethane Coating MIL-PRF-85285, 38

(a) Apply a light mist coat of Polyurethane Coating, MIL-PRF-85285, to repair area and allow to set thirty to sixty minutes.

(b) Apply a second coat of Polyurethane Coating, MIL-PRF-85285, to repair area. Allow to dry. The total dry film thickness of the applied coating shall be 1.7 to 2.3 mils.

d. If using High Solids Epoxy Primer, MIL-PRF-23377, and Polyurethane Coating, MIL-PRF-85285, apply as follows:

CAUTION

Never mix materials from different manufacturers.

(1) High Solids Epoxy Primer, MIL-PRF-23377, is supplied as a two component kit which requires mixing. Consult manufacturer's instructions for proper mixing procedures. Allow the mixed primer coating to stand for approximately thirty minutes prior to application.

NOTE

In general, the pot life of epoxy primer coating is four hours. During hot or humid conditions, the pot life will decrease. Only mix the amount of material that can be used within two hours. Do not add thinner to attempt to compensate for coatings beyond useful pot life

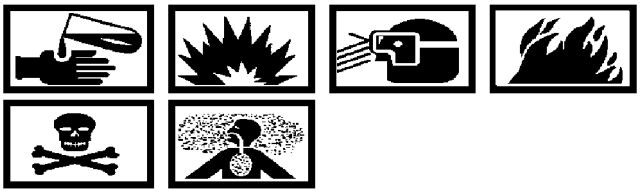

High Solids Epoxy Primer MIL-PRF-23377 15

(a) Apply one coat of High Solids Epoxy Primer, MIL-PRF-23377, to repair area. Allow to air dry for a minimum of two hours. The total dry film thickness of the applied primer shall be 0.6 to 0.9 mils. Primer coating must be continuous, uniform, and free from bubbles, pinholes, runs, sags, and other surface imperfections.

CAUTION

Do not apply topcoat unless the primer coating is tack free.

(2) Polyurethane Coating, MIL-PRF-85285, is supplied as a two component kit which requires mixing. Consult manufacturer's instructions for proper mixing procedures.

NOTE

In general, the pot life of polyurethane topcoat is four hours. During hot or humid conditions, the pot life will decrease. Only mix the amount of material that can be used within two hours. Do not add thinner to attempt to compensate for coatings beyond useful pot life

Polyurethane Coating MIL-PRF-85285, 38

(a) Apply a light mist coat of Polyurethane Coating, MIL-PRF-85285, to repair area and allow to set thirty to sixty minutes.

(b) Apply a second coat of Polyurethane Coating, MIL-PRF-85285, to repair area. Allow to dry. The total dry film thickness of the applied coating shall be 1.7 to 2.3 mils.

INTERMEDIATE MAINTENANCE

STANDARD PRACTICES

INSPECTION AND NON–DESTRUCTIVE TESTING (NDT)

Reference Material

Aeronautical Anti–Friction Bearings . . . . . NAVAIR 01–1A–503

Alphabetical Index

Subject Page No.

Bearing Inspection 2

Fluorescent Penetrant Inspection 4

General Information 2

General Inspection Instructions 2

Non–Destructive Testing 4

Record of Applicable Technical Directives

None

1. **GENERAL INFORMATION.**

2. This work package (WP) details inspection methods and procedures required throughout this manual.

3. More than one method of inspection may be needed to determine the extent of damage.

4. Instructions within this WP shall only be used when specific reference is made from the inspection section of any component WP in this manual.

5. Many components are visually (white–light) inspected for external defects, others require the use of precision equipment (micrometers, measuring instruments, gages, etc.): this information is furnished prior to inspection tables throughout this manual.

6. Keep inspection areas, benches and tools clean.

7. Refer to relevant WPs for detailed information on inspection and serviceable limits of various engine components.

8. Wherever possible, the cause of damage or wear shall be diagnosed and corrected to minimize further damage from occurring.

9. **GENERAL INSPECTION INSTRUCTIONS.**

10. Components shall be thoroughly clean and free from any dirt, oil, grease, etc. to prevent hiding defects.

11. Cleanliness of components shall be maintained during inspection, repair, assembly and testing operations.

12. Detailed inspection (as shown in all inspection tables throughout this manual) shall not be performed if component(s) are seriously damaged beyond usable limits.

13. **BEARING INSPECTION**. Inspect all bearings for visible damage and roughness. Refer to NAVAIR 01–1A–503 and the following procedures.

Support Equipment Required

Part No./Type Designation	Nomenclature
–––	Scribe, bearing (0.080 in. dia)
–––	Scribe, bearing (0.120 in. dia)

Materials Required

Specification No./Part No.	Nomenclature
A–A–1206 (No. 500)	Abrasive, crocus cloth
MIL-PRF-23699	Oil, lubricating
MIL-PRF-680, Type II	Solvent, dry cleaning

CAUTION

The components of a bearing are matched and make up a set identified by the same serial number. Do not intermix components between sets.

Do not contaminate bearings. Handle bearings/components using clean plastic gloves.

a. Visually inspect bearings as follows:

(1) Inspect components for surface defects. No cracks acceptable. Reject bearing if any cracks are present.

(2) Acceptance of surface defects on bearings listed in table 1 shall be confirmed using applicable bearing scribe. Refer to steps (3) and (4).

(3) Position ball scribe perpendicular with defect and guide scribe over defect using thumb and forefinger. The only weight exerted on the defect should be the weight of the scribe.

(4) If scribe ball moves over the defect smoothly without hang–up, the defect is acceptable. If it hangs up, the defect is unacceptable. Reject bearing.

(5) Polish light grooving or scoring and pickup on inactive surfaces of all bearings to remove sharp edges and build–up. Use No. 500 abrasive crocus cloth.

Dry Cleaning Solvent
MIL–PRF–680, Type II **3**

b. Clean questionable bearings that have not been cleaned in MIL-PRF-680, Type II dry cleaning solvent.

WARNING

Use approved goggles or face shield when using compressed air for cleaning, cooling or drying. Air pressure shall not exceed 30 psig. Compressed air shall not be directed towards self or other persons.

WARNING

Do not spin bearings during drying. (Dry bearings can fly apart)

(1) Dry bearings with filtered compressed air.

Lubricating Oil, MIL–PRF–23699 2

(2) Coat bearings with a light film of MIL-PRF-23699 oil.

(3) Inspect bearings for roughness and visible damage. Refer to table 1, this WP.

NOTE

Scribe size limits listed in table 1 are reflected in a radius dimension. Scribe will reflect a diameter size ball. For example, 0.120 in. diameter will have a 0.060 in. radius, 0.080 in. diameter will have a 0.040 radius, etc.

When correctly used, a scribe of known radius can be used to accept or reject bearings with various surface defects. The scribe should not be firmly grasped, but guided with finger and thumb perpendicular (straight up and down) to the area to be inspected. The only pressure exerted on the defect to be checked should be the weight of the scribe.

(4) Polish light grooving or scoring and pickup on inactive surfaces of all bearings to remove sharp edges and build–up using No. 500 crocus cloth.

c. Roughness Check: Retain one ring of the bearing and slowly rotate the other. Noticeable roughness or jerking is cause for bearing rejection.

Table 1. Bearing Positions and Inspection Scribe Size Radius

Bearing position	Scribe Size Radius
Reduction Gear Accessory Bearings	0.040 in.
Propeller Shaft Roller Bearing	0.060 in.
Propeller Shaft Ball Bearing	0.060 in.
Rear Planet Carrier Bearing	0.060 in.
Main Drive Gear Bearing	0.060 in.
Planet Gear Bearings	0.060 in.
Front Pinion Gear Bearing	0.060 in.
Rear Pinion Gear Bearing	0.060 in.
Torquemeter Bearing	0.040 in.
Compressor Extension Shaft Bearing	0.040 in.
Front Compressor Bearing	0.040 in.
Rear Compressor Bearing	0.040 in.
Front Turbine Bearing	0.040 in.
Rear Turbine Bearing	0.040 in.

14. **NON–DESTRUCTIVE TESTING.**

15. **FLUORESCENT PENETRANT INSPECTION**.

Support Equipment Required

Part No./Type Designation	Nomenclature
ZA–43	Kit, fluorescent penetrant

Materials Required

Specification No./Part No.	Nomenclature
MIL-PRF-680, Type II	Solvent, dry cleaning

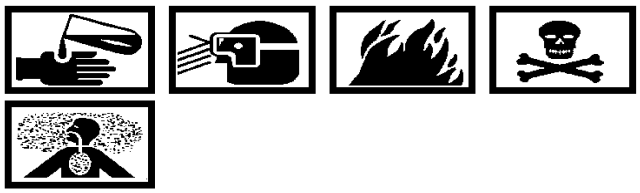

Dry Cleaning Solvent
MIL–PRF–680, Type II **3**

a. Thoroughly clean area to be inspected with MIL-PRF-680, Type II cleaning solvent.

WARNING

Use approved goggles or face shield when using compressed air for cleaning, cooling or drying. Air pressure shall not exceed 30 psig. Compressed air shall not be directed towards self or other persons.

b. Dry with filtered compressed air.

Fluorescent Dye Penetrant ZA–43 **17**

c. Fluorescent dye penetrant inspect (FPI) using ZA–43 FPI kit.

INTERMEDIATE MAINTENANCE

STANDARD PRACTICES

REPAIR

Reference Material

Aircraft and Missile Structural Hardware . . . . . NAVAIR 01–1A–8
Heli–Coil Inserts General Installation . . . . . NAVAIR 02–1–19

Alphabetical Index

Subject Page No.
Bushing Replacement 2
Thread Repair 2

Record of Applicable Technical Directives

None

1. **THREAD REPAIR.**

NOTE

In tapping magnesium alloy, the resulting tapped hole will be approximately 0.002 in. oversize.

a. Repair parts having stripped or damaged threaded holes by use of Heli–Coil inserts or by installing a suitable bushing, provided there is sufficient stock to maintain the required wall strength after drilling, tapping, and installing the bushing.

b. If a Heli–Coil thread insert is improperly installed, it may jam the tapped hole so that screw cannot be installed; it may bind threads of screw and prevent proper tightening; or it may tend to back out of the hole when screw is removed.

c. Refer to NAVAIR 02–1–19 for installation of Heli–Coil inserts.

2. **BUSHING REPLACEMENT.**

a. Drill out the lockpin.

b. Remove the damaged bushing.

NOTE

Ensure drill tip included angle is greater than 122 degrees. This causes the drill outside edge to contact the surface of the bushing external thread before the drill tip. This is necessary to minimize drill drift away from the harder bushing threads and into the softer internal threads.

c. Install new bushing.

d. Drill hole 0.300 inch ± 0.010 inch deeper than pin length and secure the bushing with a new lockpin. Stake as follows:

(1) Place punch adjacent to pin hole such that shank outside diameter is approximately flush with pin hole outside diameter. (See figure 1)

(2) Hold punch top away from pin hole approximately five degrees.

(3) Strike punch with hammer to deform metal slightly over top of pin.

(4) Additional stakes (restakes) are permitted if deformed metal is broken off.

(5) Total stake attempt locations permitted is three.

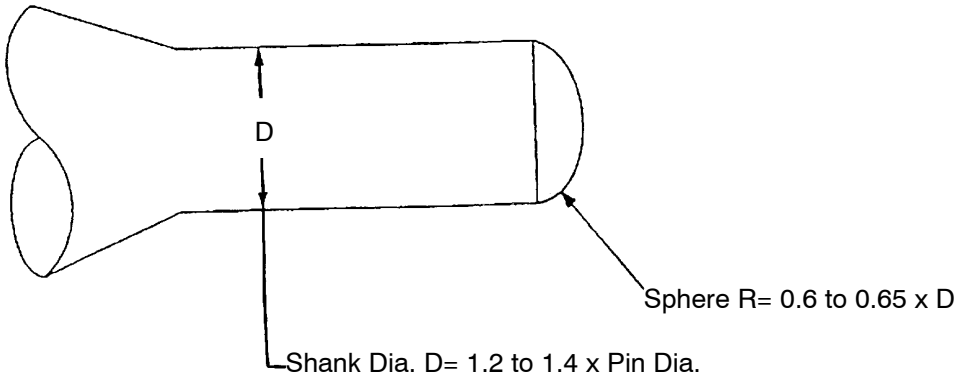

Figure 1. Staking Punch Configuration

INTERMEDIATE MAINTENANCE

STANDARD PRACTICES

ASSEMBLY AND DISASSEMBLY

Reference Material

Aircraft and Missile Structural Hardware . . . . . NAVAIR 01–1A–8
Cleaning and Corrosion Treatment – Standard Practices . . . . . WP 016 00
Illustrated Parts Breakdown, T56–A–427 Turboprop Engine . . . . . NAVAIR 02B–5DG–4

Alphabetical Index

Subject Page No.
Bearings 7
Bearing Definitions 7
Bearing Handling 7
Heating Bearings 8
Cup Washer Installation 6
Engine Fit Limits 2
General 2
General on Linkage 6
Typical Cotter Pin Installation 9
Typical Lockwire Installation 8
Tightening Procedures 3
Torque Values 2
Stud Back Off Torque 3

Record of Applicable Technical Directives

None

1. **GENERAL.**

a. Inspection and repair is based on the general premise that repair of an item is done to increase flight safety and to increase the service life of a part.

b. Usually parts which have been operating satisfactorily can be returned safely to service with little rework.

c. Specified limits, together with visual inspections, are the indispensable guides in determining the further use, repair, or rejection of a particular part.

d. Replace or repair parts when visual inspection and disassembly conditions indicate that measurement is required and wear is found to exceed the limits.

e. Minor imperfections on parts, incurred in process of disassembly or handling at previous servicing, are of a nature too varied to be entirely covered by specific instructions.

f. Acceptance or rejection of these parts is left to the combined judgement of technical and quality control personnel of the local facilities.

g. This judgment may be based on the following principles:

(1) Is the damaged part a highly stressed part of the engine?

(2) Could the nature of the imperfection on the part create a possible condition of “over–stress” which might result in failure?

h. Service–approved, corrosion–preventive compounds are required on all steel parts after inspection unless the part is to be reworked immediately.

i. Close all openings that have been uncovered during repair with suitable covers, plugs, or caps.

j. Carefully inspect all threaded surfaces for wear, burring, and general condition.

k. Check oil and air passages and holes for burring, blocked openings, foreign material, or general damage.

l. Inspect all studs, screw bushings, bearing cages, and plugs for looseness and damage.

m. Thoroughly check parts for excessive wear, burns, distortions, or cracks.

n. Look for damage and wear before cleaning, as well as after cleaning, because evidence of damage may be lost in cleaning.

o. If penetrating oil is deemed necessary, use MIL-PRF-24548.

2. **ENGINE FIT LIMITS.**

a. The engine fit limits define the correct dimensional relationship between mated parts. Use these limits as a guide when replacing or determining serviceability of parts. The letters “L” and “T” indicate a “loose” or “tight” fit. Tolerances are shown in the “Minimum” and “Maximum” columns. A 0.000 value is to be considered as a tight fit.

b. The limits specified, for circumferential fits between inside diameter (ID) and outside diameter (OD) of two parts, are based on the difference between machined, true circle diameters on the two parts. Therefore, when inspecting and measuring used parts to determine assembly fit condition, an average diameter must be established if an out–of–round condition exists.

c. During assembly, refer to latest issue of 02B–5DG–4 Illustrated Parts Breakdown for parts and usable on codes.

3. **TORQUE VALUES.**

a. Before use or reuse, self–locking devices should be checked to ensure that the self–locking quality is serviceable.

b. Inbuilt torque (nut locking torque) for self–locking devices. Table 1 provides the range of acceptable inbuilt torque loads for self–locking devices (nuts and threaded inserts).

c. Nut locking torque is the torque required to start the nut turning when: (1) the nut is engaged with the full chamfer of the bolt or stud extending beyond the locking device of the nut, and (2) there is no axial load on the nut.

d. Under no circumstances should the locking torque of the device be altered by crimping or by tapping.

e. All torques are lb–in. (pound–inches) unless otherwise specified; also, the tightness is obtained without thread lubricant unless otherwise specified. Threads must be free of burrs or nicks and turn freely without binding.

f. Treat all socket–head screws as bolts. Generally, if a part requires the use of a wrench, treat it as a bolt. If the part requires the use of a screwdriver treat it as a screw. All set screws, regardless of head type, require a screw torque to prevent set tip damage.

g. Castellated nuts on bolts, screws or studs with small shank diameter (necked down), require a special torque. Nuts on studs, with stud end thread size smallest, require special torques. Use standard torques for the thread size affected on bolts with more than one thread size (double–ended, not using the threads for drive). If more than one thread size is affected by installation, a special torque is usually required.

Table 1. Self–locking Devices Inbuilt Torque

Thread Size	Thread per Inch	Minimum Inbuilt Torque*	Maximum Inbuilt Torque*
No. 4	40	0.5	5
No. 4	48	0.5	5
No. 6	32	1.0	10
No. 6	40	1.0	10
No. 8	32	1.5	15
No. 8	36	1.5	15
No. 10	24	2.0	18**
No. 10	32	2.0	18**
1/4	20	4.5	30
1/4	28	3.5	30
5/16	18	7.5	60
5/16	24	6.5	60
3/8	16	12.0	80
3/8	24	9.5	80
7/16	14	16.5	100
7/16	20	14.0	100
1/2	13	24.0	150
1/2	20	18.0	150
9/16	12	30.0	200
9/16	18	24.0	200
5/8	11	40.0	300
5/8	18	32.0	300
3/4	10	60.0	400
3/4	16	50.0	400
7/8	9	82.0	50 lb ft

4. **STUD BACK–OFF TORQUE.**

CAUTION

Under no condition do the stud back–off torque limits relax the controls on the stud setting torque. The back–off torque limit is for inspection only and is intended to serve as an effective limit where needed.

a. In instances where it is impossible or impractical to check stud driving torque, a back–off torque check may be made to ensure that the stud will not move during normal usage with conventional lock nuts. The stud shall withstand the back–off torque specified in table 2 without loosening. These back–off torques correspond to the maximum installation and removal torques of self–locking nuts.

Table 2. Stud Back–off Torque Limits

Stud Thread Size (nut end)	Back–off Torque (lb–in)
10 – 32	18
1/4 – 28	30
5/16 – 24	60
3/8 – 24	80
7/16 – 20	100
1/2 – 20	150
9/16 – 18	200
5/8 – 18	300
3/4 – 16	400

5. **TIGHTENING PROCEDURES.**

NOTE

Bolt circles containing metal O–ring gaskets are an exception. Tighten the bolts in a circumferential pattern. Repeat until the correct torque is maintained.

a. On bolt circles, tighten all nuts, bolts or screws that are 180° apart alternately to half minimum torque. Repeat the process, tightening to specified torque.

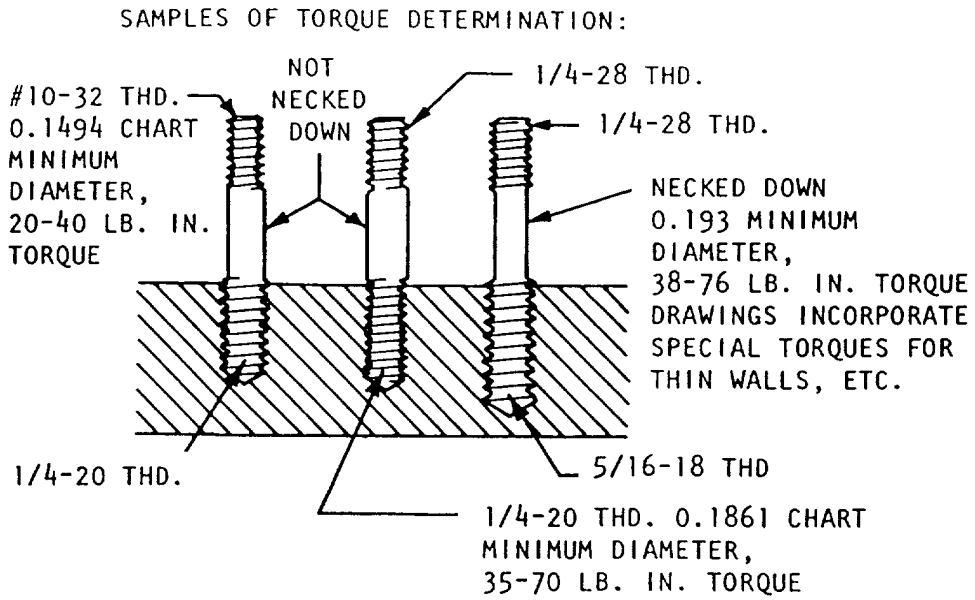

1. These charts provide stud driving torque limits for setting all fine and coarse thread studs of aircraft quality steel. Torque limits for other thread sizes and special applications are on drawings.

2. Minimum diameter of a stud is the smallest diameter (nut-end or stud end thread root of plain studs or shank of necked-down studs). This is the probable place of fracture and determines the torque.

3. OVERSIZES. Studs are oversize only on the studding end pitch diameter, the outside diameter and driver end threads are standard. Oversize studs are identified by dash marks on the driver end, one for a +0.003 inch, two for a +0.006 inch, three for a +0.009 inch and four for a +0.012 inch.

4. RETAPPING. Clean or retap stud holes only when the condition of the threads makes it necessary. Always use the proper type of tap, never one that is oversize on the outside diameter of the threads.

5. LUBRICATION. Refer to lubricants and sealing compounds tables in Section VI.

6. SELECTION. Select studs which will drive to the specified depth within the minimum and maximum torque limits. Stud driving torque limits are shown. These limits are specified and stud minimum diameters are shown for quick reference with necked-down minimum diameters. These diameters may be measured to the nearest 0.01 inch. When replacing a stud, carefully control the setting height to ensure proper assembly of parts. Measure adjacent studs in the same location to determine setting height or refer to the appropriate print.

Figure 1. Stud Driving Torque Limits (Sheet 1)

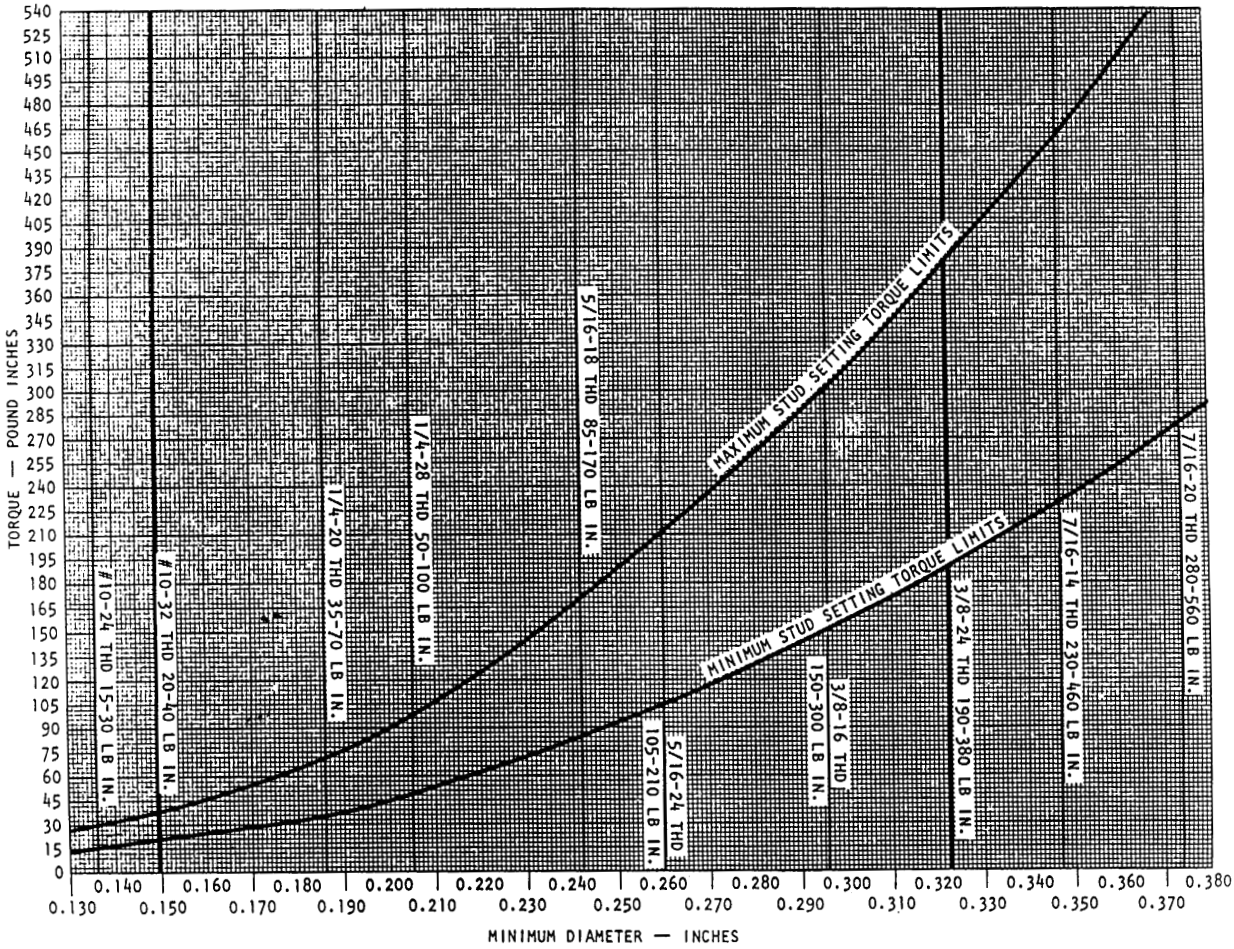

Figure 1. Stud Driving Torque Limits (Sheet 2)

NOTE

Compressor case horizontal splitlines are an exception. Tighten the bolts as indicated in the applicable Compressor Assembly WP.

b. On splitlines (other than bolt circles), tighten mid–section nuts, bolts, or screws to half of minimum torque. Then tighten all remaining threaded parts. Repeat the process, tightening to specified torque.

c. When screws are installed with nuts, apply the torque specified for the screw.

NOTE

Hose nuts, electrical harness nuts, and nuts which retain O–ring seals do not require pretightening regardless of size.

d. Unless otherwise specified, tighten all spanner nuts and other nuts which exceed one–inch thread size, to the maximum specified torque to ensure seating of parts. Loosen, then retighten to specified torque.

e. To secure parts using copper–fiber or aluminum–fiber gaskets, tighten nuts, bolts, or screws to required torque. Loosen, then retighten to required torque.

f. To prepare for angular tightening at splitline, tighten all nuts in staggered sequence to torque limits if given, or until parts are firmly seated at splitline. Then loosen one at a time and retighten finger tight. Angular tightening starts from the finger tight position.

6. **GENERAL ON LINKAGE.**

Materials Required

Specification No./Part No.	Nomenclature
MIL–PRF–23827	Grease, lubricating
MS20995C32	Lockwire

CAUTION

Do not wash or lubricate rod ends of ball bearing type which have bonded neoprene seals. Merely wipe clean prior to assembling.

General Purpose Grease MIL–PRF–23827 18

a. Apply MIL–PRF–23827 to control linkage ball joint and bearings after parts are washed.

b. Linkage which is threaded on both ends shall be adjusted to length and assembled with approximately equal thread on each end. However, assemble threaded linkage with the male end inserted past the observation holes of the female parts.

c. After adjustments, secure all linkage attaching parts with MS20995C32 lockwire, where required, as shown in figure 2.

7. **CUP WASHER INSTALLATION.**

Materials Required

Specification No./Part No.	Nomenclature
SAE–AMS-M-7866	Molybdenum Disulfide
MIL-PRF-23699	Oil, Lubricating

Molybdenum Disulfide Lubricant SAE–AMS–M–7866 19

Lubricating Oil, MIL–PRF–23699 2

a. Coat cup washer with a mixture of SAE–AMS–M–7866 and MIL–PRF–23699 as specified in applicable WP.

b. Install cup washer and nut. After nut is tightened to specified torque, dimple lip of cup washer into one of nut scallops provided, not into a nut slot.

c. Dimple cup washer using proper tools as follows:

CAUTION

Impact type dimpling, such as that produced by hammer blows (which tend to harden the bearing material) is not permitted.

(1) On bearing mounted applications use the proper dimpling fixture specified in applicable WP.

CAUTION

Use of a standard punch or flat end drift, which tends to split or damage cup, is not permitted.

(2) On non–bearing mounted applications a dimpling fixture is preferred. If no fixture is available, dimpling may be accomplished using a spherical end punch. Place spherical end of punch on washer lip (at a scallop location) and depress lip into scallop by a light rap with a hammer.

d. Remove the cup washer dimple by reversing the nut. (Do not attempt to straighten the dimple prior to cup–lock washer removal.)

CAUTION

When reusing cup washers, make sure the old locking dimple has been completely smoothed. If the cup washer dimple is present, metal milling chips are a possibility from the nut turning in the cup washer and engine failure could result.

NOTE

Do not dimple a re–used cup washer in the same area. Do not use a split or torn cup washer or one that no longer has a remaining unused lip area for dimpling.

e. Re–use of the cup washer is determined by the condition after removal. Additional straightening after removal is permitted. (Use care so as not to split or tear the cup washer.)

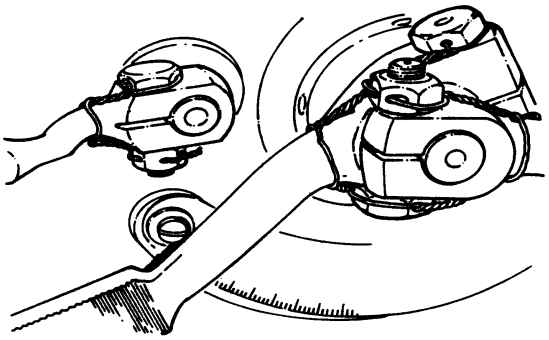

Figure 2. Typical Control Linkage Lockwire Installation

8. **BEARINGS.**

9. **BEARING DEFINITIONS.**

a. Balls–Rotating spheres of a ball bearing assembly.

b. Rollers–Rolling cylinders of a roller bearing assembly.

c. Inner Raceway–Inner ring surface upon which balls or rollers rotate.

d. Inner Ring–Innermost members of a bearing assembly.

e. Bore–Innermost surface of the inner ring of a bearing assembly.

f. Separator–Retainer for bearing balls or rollers.

g. Outer Raceway–Outer ring surface upon which balls or rollers rotate.

h. Outer Ring–Outermost member of a bearing assembly.

i. Outer Diameter–Outermost surface of the outer ring.

10. **BEARING HANDLING.**

a. Keep bearing components together as a matched assembly during disassembly, cleaning, and reassembly. (These components shall not be intermixed with other bearing components.)

b. Ball bearings with pressed steel separators are nonseparable. Inspect visually and by feel, without removing from shaft.

c. Remove bearings (removed because of damage or as a disassembly requirement) by inner ring puller. Even nonseparable ball bearings (which appear rough) should be removed by inner ring puller.

d. In some instances it is not possible to remove the roller bearing from shaft by pulling on the outer side of the lip of the inner ring. Removal, therefore, may be facilitated by pulling against inner side of lip of inner ring raceway using an appropriate puller. (Since the method requires prior removal of rollers and separator from bearing, use care to avoid dropping these components.)

e. When a ball bearing is removed by outer ring puller, the bearing is acceptable for continued use if it is acceptable by a visual inspection and by the use of a bearing scribe.

11. **HEATING BEARINGS.**

Support Equipment Required

Part No./Type Designation	Nomenclature
LW–201C (CAGE 90423)	Oven (400°F max)

Materials Required

Specification No./Part No.	Nomenclature
MIL–PRF–23699	Oil, lubricating

a. Clean bearings in accordance with WP 013 00.

WARNING

Heated parts will cause skin damage (burns). Use clean insulated gloves to handle parts.

Lubricating Oil, MIL–PRF–23699 **2**

CAUTION

Be sure that temperature and heating time limits are never exceeded when heating a bearing for installation.

Do not place a bearing directly on an electric hot plate surface, as this could damage the bearing rings due to initial extreme temperature differentials. For this reason, heating in a controlled oven is preferred. However, heating in MIL–PRF–23699 engine oil is acceptable. When using oil be sure it is filtered and kept clean. Do not heat oil to flash point.

Allow the bearing and related parts to return to approximately room temperature before tightening the retaining nut or continuing with assembly involving the bearing.

Push on the inner ring when installing a ball bearing. Do not push on the outer ring of bearing.

NOTE

Temperatures listed in table 3 are maximum temperatures. Lower temperatures may be used so long as parts can be assembled without damaging mating surfaces.

b. Bearings may be uniformly heated in a LW–201C controlled oven or in a heated oil bath, as required, and/or pressed on to ensure seating. See table 3 for temperature limits and time limits.

12. **TYPICAL LOCKWIRE INSTALLATION.**

Materials Required

Specification No./Part No.	Nomenclature
MS20995C32	Lockwire

NOTE

For more specific lockwire techniques refer to NAVAIR 01–1A–8.

a. Unless otherwise specified, use new MS20995C32 wire for lockwiring.

Table 3. Bearings Heated for Ease of Assembly

Nomenclature	Max. Temp °F	Min. Time	Max. Time
Bearing, Roller Rear Carrier	325°	15 min.	4 hrs.
Bearings, Roller Tach Drive	325°	15 min.	4 hrs.
Bearings, Roller Hyd., Idler Frt, Rr	325°	15 min.	4 hrs.
Bearing, Roller Tach Idler	325°	15 min.	4 hrs.
Bearing, Roller Hyd., Drive Frt, Rr	325°	15 min.	4 hrs.
Bearing, Cap	275°	15 min.	4 hrs.
Bearing, Compressor Front	325°	15 min.	4 hrs.
Bearing, Compressor Side Gear	325°	15 min.	4 hrs.
Bearing, Turbine Rear	325°	15 min.	4 hrs.
Bearing, Turbine Front	300°	15 min.	4 hrs.

b. Use lockwire pliers wherever practicable for twisting the wire.

c. Be sure before lockwiring, that nuts, screws and plugs are torqued properly and witnessed by QA.

d. Install lockwire in such a way that any tendency of secured parts to loosen is counteracted by the wire. (See figure 3.)

e. Wherever practicable make first turn by hand to get proper formation; otherwise, use long–nosed pliers. Make remaining turns with a lockwire twisting tool.

f. Wiring must be tight but not marred or under too much tension. The number of twists per inch is not critical, but five twists per inch is good practice. Do not overstress by twisting to the point where wire will break under a slight load.

g. Make at least three twists in free ends of lockwire. Cut ends at least 0.500 in. long and always bend ends inward to guard against injury.

h. Figure 3 illustrates double strand twisted and single strand lockwiring.

13. **TYPICAL COTTER PIN INSTALLATION.**

NOTE

For more specific cotter pin installation techniques, refer to NAVAIR 01–1A–8.

a. The cotter pin “head” must take all “loading.”

b. The cotter pin eye “plane” must be parallel to axis of bolt or stud.

c. Bend the short spring down flat over nut and bend long spring up over bolt end, unless otherwise specified.

d. Seat cotter pin eye against the bolt (or stud) and bend springs tight so that cotter pin will not move axially after installation.

e. Force cotter pin eye into the nut castellation if limit of stack conditions cause interference between eye of cotter pin and bottom of nut castellation.

f. Cut off prongs flush with end of bolt or stud or bend them around nut, bolt or stud if interference is encountered by bending them over the bolt or stud end. (See figure 4.)

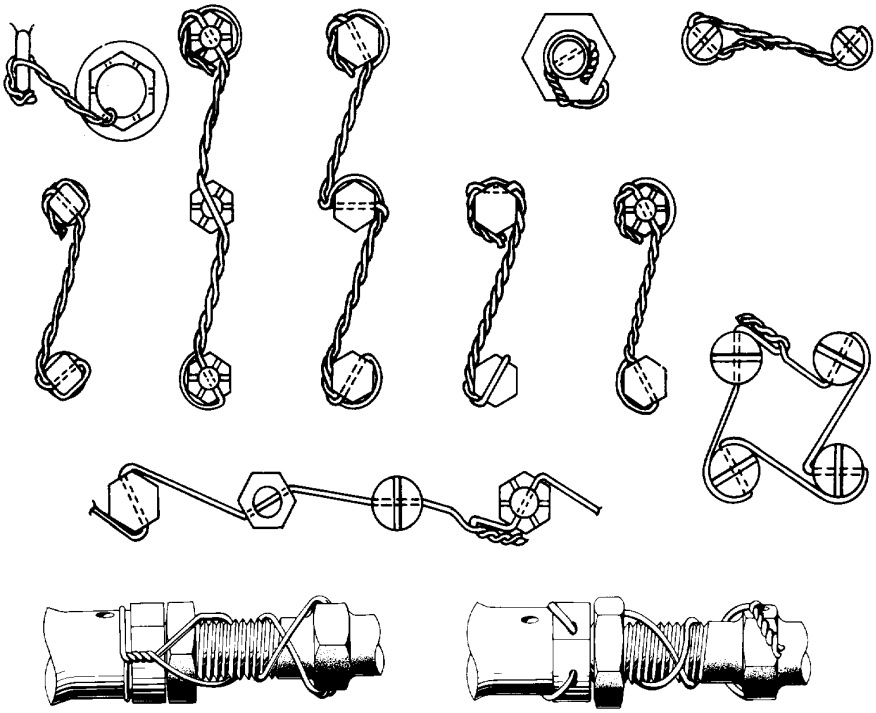

Figure 3. Typical Application of Lockwiring

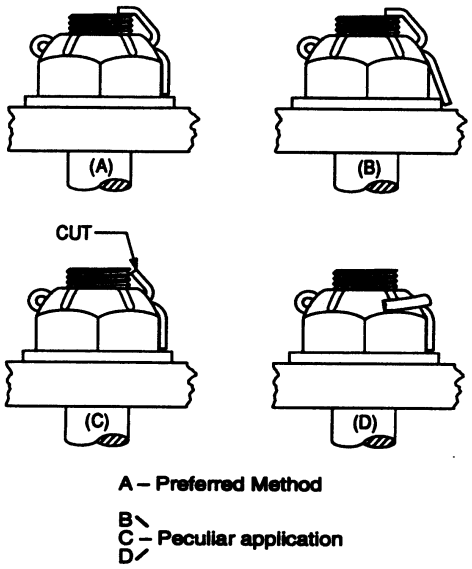

Figure 4. Typical Cotter Pin Installation

INTERMEDIATE MAINTENANCE

REPLACEMENT

OIL SEAL PLUGS

Reference Material

Illustrated Parts Breakdown, T56–A–427 Turboprop Engine . . . . . NAVAIR 02B–5DG–4

Alphabetical Index

Subject Page No.

Hydraulic Pump and Generator Drive Shaft Oil Seal Plug – Replacement 2
Hydraulic Pump Idler Drive Shaftgear Oil Seal Plug – Replacement 3
Introduction 2
Oil Seal Plug Replacement 2
Side Accessory Drive Shaft Oil Seal Plug – Replacement 3
Tachometer Drive Gear Oil Seal Plug – Replacement 2
Tachometer Drive Shaft Oil Seal Plug – Replacement 2

Record of Applicable Technical Directives

None

1. **INTRODUCTION.**

2. This Work Package (WP) provides the instructions for replacing oil seal plugs in drive shafts and gears used in the reduction gear assembly and accessory drive housing on T56–A–427 turboprop engine.

3. **OIL SEAL PLUG REPLACEMENT.**

4. **TACHOMETER DRIVE SHAFT OIL SEAL PLUG–REPLACEMENT.**

a. Remove plug from shaft inside diameter (ID) using a soft drift and arbor press.

b. Remove all burrs and rough spots from ID.

NOTE

The outside diameter (OD) of the oil seal plug is tapered. Diameter B (open end) is used to select a plug that will provide the correct tight fit.

c. Measure ID of gear. Select a plug size (figure 1) that will provide a 0.001–0.003 in. tight fit with shaft ID.

d. Install plug using a soft drift and arbor press.

5. **TACHOMETER DRIVE GEAR OIL SEAL PLUG–REPLACEMENT. (figure 1)**

a. Remove plug from gear ID using a soft drift and arbor press.

b. Remove all burrs and rough spots from ID.

NOTE

The OD of oil seal plug is tapered. Diameter B (open end) is used to select a plug that will provide the correct tight fit.

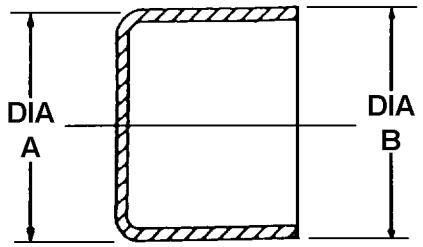

PART NO.	DIA A	DIA B	OVERSIZE DIM.
18326	0.372–0.373	0.378–0.379	None
18236 P010	0.382–0.3833	0.388–0.389	+0.010
TACHOMETER DRIVE SHAFTS			
19144	0.747–0.748	0.753–0.754	None
19144	0.752–0.753	0.758–0.759	+0.005
19144	0.757–0.758	0.763–0.764	+0.010
19144	0.762–0.763	0.768–0.769	+0.015
19144	0.767–0.768	0.773–0.774	+0.020
TACHOMETER DRIVE GEAR			

Figure 1. Tachometer Drive Shaft and Drive Gear – Oversize Plug Sizes

c. Measure ID of gear. Select a plug size (figure 1) that will provide a 0.001–0.003 in. tight fit with gear ID.

d. Install plug using a soft drift and arbor press.

6. **HYDRAULIC PUMP AND GENERATOR DRIVE SHAFT OIL SEAL PLUGS – REPLACEMENT. (figure 2)**

a. Remove plug from shaft ID using a soft drift and arbor press.

b. Remove all burrs and rough spots from ID.

NOTE

The OD of oil seal plug is tapered. Diameter B (open end) is used to select a plug that will provide the correct tight fit.

c. Measure ID of shaft. Select a plug size (figure 2) that will provide a 0.002–0.005 in. tight fit with shaft ID.

d. Install plug using a soft drift and arbor press.

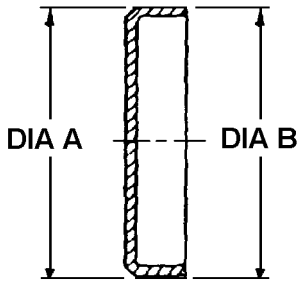

PART NO.	DIA A	DIA B	OVERSIZE DIM.
6705924	1.309–1.310	1.314–1.315	None
6705924	1.314–1.315	1.319–1.320	+0.005
6705924	1.319–1.320	1.324–1.325	+0.010
6705924	1.324–1.325	1.329–1.330	+0.015
6705924	1.329–1.330	1.334–1.335	+0.020

Figure 2. Hydraulic Pump, Alternator, and Generator Drive Shaft – Oversize Plug Sizes

7. **HYDRAULIC PUMP IDLER DRIVE SHAFTGEAR OIL SEAL PLUG – REPLACEMENT. (figure 2)**

NOTE

The shaftgear is a detail of the alternator drive gear assembly.

a. Remove plug from shaftgear ID using a soft drift and arbor press.

b. Remove all burrs and rough spots from ID.

NOTE

The OD of oil seal plug is tapered. Diameter B (open end) is used to select a plug that will provide the correct tight fit.

c. Measure ID of shaftgear. Select a plug size (figure 2) that will provide a 0.002–0.005 in. tight fit with shaft ID.

d. Install plug using a soft drift and arbor press.

8. **SIDE ACCESSORY DRIVE SHAFT OIL SEAL PLUG – REPLACEMENT. (figure 3)**

a. Remove plug from shaft ID using a soft drift and arbor press.

b. Remove all burrs and rough spots from ID.

NOTE

The OD of oil seal plug is tapered. Diameter B (open end) is used to select a plug that will provide the correct tight fit.

c. Measure ID of shaft. Select a plug size (figure 2) that will provide a 0.001–0.003 in. tight fit with shaft ID.

d. Install plug using a soft drift and arbor press.

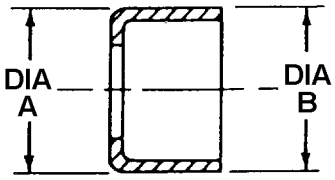

PART NO.	DIA A	DIA B	OVERSIZE DIM.
6782685	0.747–0.748	0.753–0.754	None
6782685	0.752–0.753	0.758–0.759	+0.005
6782685	0.757–0.758	0.763–0.764	+0.010
6782685	0.762–0.763	0.768–0.769	+0.015
6782685	0.767–0.768	0.773–0.774	+0.020

Figure 3. Hydraulic Pump, Alternator, and Generator Drive Shaft – Oversize Plug Sizes

INTERMEDIATE MAINTENANCE

SUPPORT EQUIPMENT MAINTENANCE

Reference Material

None

Alphabetical Index

Subject Page No.
Care of Tools 2
General 2
Inspection and Testing of Tools 2
Shipment and Storage of Tools 2

Record of Applicable Technical Directives

None

1. **GENERAL.**

2. The purpose of this work package is for support equipment (SE) maintenance procedures regarding proper storage, shipment, preventive maintenance, troubleshooting, lubrication, operating checks, adjustments, periodic inspection and calibration, if required.

3. **CARE OF TOOLS.**

Materials Required

Specification No./Part No.	Nomenclature
MIL–PRF–23699	Oil, lubricating

a. Keep tools clean and free from corrosion, nicks, dents, or burrs.

Lubricating Oil, MIL–PRF–23699 2

b. Lubricate threads and sliding surfaces of tools with MIL–PRF–23699 lubricating oil.

c. Be sure that all exposed electrical connections and contacts are clean and tight.

d. Cover all cable connections when not in use. Use plastic caps.

e. Position all wiring and cables so that they will not be subjected to strain, sharp bends, or kinks.

f. Keep all hardware (nuts, bolts, and screws) tight.

4. **SHIPMENT AND STORAGE OF TOOLS.**

a. When it is necessary to ship special equipment, it should be packed to ensure safe shipment and storage. Military specifications applicable to specific items should be complied with.

5. **INSPECTION AND TESTING OF TOOLS.**

a. Inspect special equipment on a periodic basis, or whenever it is suspected of faulty operation.

b. Test special equipment in accordance with applicable technical manuals.

c. Troubleshoot SE in accordance with instructions in the applicable technical manuals.

INTERMEDIATE MAINTENANCE

PREPARATION FOR SERVICE AND STORAGE

Reference Material

Aircraft Weapon Systems Cleaning and Corrosion Control . . . . . NAVAIR 01-1A-509
Illustrated Parts Breakdown, T56-A-427 Turboprop Engine . . . . . NAVAIR 02B-5DG-4
Preservation of Naval Aircraft . . . . . NAVAIR 15-01-500
Maintenance on Parallel Rail Work Stand . . . . . WP 022 00
Troubleshooting . . . . . WP 025 00
Turbine Unit, Removal and Installation . . . . . WP 030 00
Reduction Gear, Disassembly . . . . . WP 038 00
Accessory Drive Housing Parts, Cleaning, Inspection, Repair . . . . . WP 043 00
Compressor Blades and Vanes Inspection and Repair . . . . . WP 045 00
Compressor Case, Air Inlet Housing, and Diffuser, Clean, Inspect, Repair . . . . . WP 048 00
Dual Element Fuel Pump, Maintenance . . . . . WP 058 00
High Pressure Fuel Filter . . . . . WP 059 00
Low Pressure Fuel Filters and Elements . . . . . WP 061 00
Fuel Control . . . . . WP 064 00
Reduction Gear Magnetic Plug, Maintenance . . . . . WP 072 00
Power Section Oil Filter . . . . . WP 077 00
Power Section Wiring Harnesses, Maintenance . . . . . WP 081 00
Igniter Exciter . . . . . WP 082 00
Spark Igniter Leads . . . . . WP 086 00
Thermocouple Harness . . . . . WP 087 00
Bleed Air Valve, Maintenance . . . . . WP 089 00
Compressor Bleed Air Filter, Maintenance . . . . . WP 090 00
Anti-Icing Solenoid Valve, Maintenance . . . . . WP 091 00

Alphabetical Index

Subject Page No.
Compressor Rotor Installation and Removal From Container 29
Compressor Rotor Installation Into Container 29
Compressor Rotor Removal From Container 29
Depreservation and Initial Run 31

Alphabetical Index (Contd)

Subject Page No.

Digital Electronic Trim Control Installation Into Shipping Container 6
Engine Corrosion Protection 3
General 3
Maintenance in Preservation (Preserved Engine Assembly or Module in Shipping Container) 29
Preserved Engine Maintenance (Shipping Container Opened) 31
Renewal of Preservation (Operable Engines) 31
Shipping Container Maintenance (Container Sealed) 31
Planetary System Removal From and Installation Into Shipping Container 13
Planetary System Installation into Shipping Container 14
Planetary System Removal From Shipping Container 13
Preparation of Shipping Container 14
Pre-Induction Inspection 37
Power Section Removal From and Installation Into Shipping Container 6
Final Container Preparation 12
Power Section Installation Into Shipping Container (P/N 6854347 and 6800444) 12
Power Section Preparation for Installation Into Shipping Container 7
Power Section Removal From Shipping Container 6
Preparation of Shipping Container (P/N 6854347 and 6800444) 9
Preservation of Inoperable Engines 34
Depreservation 37
Maintenance in Preservation 37
Preservation When Rotor Shaft Can Be Rotated 34
Preservation When Rotor Shaft Cannot Be Rotated 35
Renewal of Preservation 37
Preservation of Operable Engines 32
Inactive Beyond 30 Days 33
Oil System Preservation 32
Renewal Every 30 Days 32
Reduction Gear Removal From and Installation Into Shipping Container 14
Final Container Preparation 20
Preparation of Shipping Container 20
Reduction Gear Installation Into Shipping Container 20
Reduction Gear Preparation for Installation Into Shipping Container 16
Reduction Gear Removal From Shipping Container 14
Shipping Containers 5
Torquemeter Removal From and Installation Into Shipping Container (P/N 6848690) 21
Final Container Preparation (P/N 6848690) 24
Preparation of Shipping Container (P/N 6848690) 21
Torquemeter Installation Into Shipping Container (P/N 6848690) 24

Alphabetical Index (Contd)

Subject Page No.

Torquemeter Preparation for Installation Into Shipping Container (P/N 6848690) 22
Torquemeter Removal From Shipping Container (P/N 6848690) 21
Torquemeter Removal From and Installation Into Shipping Container (P/N 6854340) 24
Final Container Preparation (P/N 6854340) 28
Preparation of Shipping Container (P/N 6854340) 25
Torquemeter Installation Into Shipping Container (P/N 6854340) 28
Torquemeter Preparation for Installation Into Shipping Container (P/N 6854340) 27
Torquemeter Removal From Shipping Container (P/N 6854340) 24

Record of Applicable Technical Directives

None

1. **GENERAL.**

a. The instructions in this WP are applicable to the T56–A–427 engine. The instructions supplement but do not take precedence over the requirements of NAVAIR 15–01–500.

b. This WP provides instructions for engine preservation, storage, unpacking, depreservation and initial run. Refer to NAVAIR 15–01–500 for types of preservation, time intervals, maintenance in preservation, renewals, inspection, corrosion control, materials, log book records and tag requirements. Refer to NAVAIR 01–1A–509 for type of corrosion preventative concentrate for use with MIL–PRF–23699 oil during periods of engine inactivity.

2. **ENGINE CORROSION PROTECTION.**

Materials Required

Specification No./Part No.	Nomenclature
TT–P–1757	Primer, zinc chromate
MIL-PRF-680, Type II	Solvent, dry cleaning

Dry Cleaning Solvent MIL–PRF–680, Type II **3**

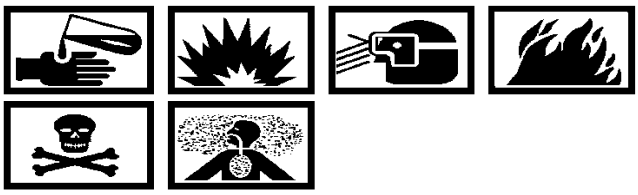

Zinc Chromate Primer TT–P–1757 **20**

a. Engine Assembly–After assembly (to prevent corrosion) apply two coats of paint (ambient air dry) to areas of splitlines, where parts are made of different metals (also bolts, nuts, and brackets). This does not apply to the combustion and turbine areas. Clean areas to be painted with MIL–PRF–680, Type II solvent and allow to air dry. Apply regardless of paint or plating which may be on parts in contact. Application of TT–P–1757 primer shall be sufficient to seal contact points against moisture.

b. Apply primer to the following specific locations:

(1) Compressor casing assembly:

(a) All bolts, nuts, washers, and brackets.

(2) Air inlet housing:

(a) Steel plates on the OD of inlet guide vanes at each rivet on the ID

(b) Steel bolts holding the guide vane to air inlet housing

(c) Strut fittings

(d) Control lever bracket

(e) Anti–icing valves

(f) Fuel control capillary flange

(g) Fuel control sensing probe fitting

(h) Air balance line bushing

(i) All steel bushings

(j) Compressor case front splitline

(k) Breather assembly tube flange

(l) Breather mounting nuts, washers and brackets.

(3) Accessory drive housing:

(a) All mounting bolts, nuts, and washers

(b) All accessory mounting bolts, nuts, and washers including ID of clamp on main fuel control

(c) Name plate mounting screws and washers

(d) Accessory housing–to–cover splitline

(e) Accessory drive housing–to–air inlet housing splitline.

(4) Accessories:

NOTE

Do not paint detail parts of accessories.

(a) Ignition relay and solenoid–to–mounting bracket

(b) Low pressure filters–to–mounting bracket and clamps

(c) Enrichment valve bracket–to–accessory housing

(d) Steel connectors on hose and tube assemblies.

(5) Torquemeter assembly:

(a) Housing–to–air inlet housing splitline

(b) Housing–to–reduction gear rear housing

(c) Cowling–to–torquemeter housing

(d) Marman clamp splitline

(e) Cowling fasteners at air inlet housing

(f) Anti–icing air connection

(g) Pick–up pad splitline

(h) Cowling assembly pins.

(6) Reduction gear assembly:

(a) Front housing–to–diaphragm splitline

(b) Rear housing–to–diaphragm splitline

(c) Nose plate–to–front housing

(d) All unused steel bushings (spinner mount)

(e) Magnetic plug bushings

(f) Control lever splitlines

(g) Oil pump mounting nuts, washers, bolts, and brackets

(h) Relief valve–to–rear housing splitline

(i) Oil hole cover plate (rear housing) splitline

(j) All plug bushings

(k) All front housing–to–rear housing splitline nuts, washers, and bolts

(l) Thrust sensitive switch splitline

(m) Nameplate mounting screws and washers

NOTE

Do not paint the covers where airframe accessories will be mounted.

(n) Electrical feather solenoid mounting bolts and splitline

(o) NTS actuator mounting bolts and splitline.

3. **SHIPPING CONTAINERS.**

Support Equipment Required

Part No./Type Designation	Nomenclature
–––	Wrench, torque (0–150 lb in.)

Materials Required

Specification No./Part No.	Nomenclature
TT–P–1757	Primer, zinc chromate

a. The shipping containers and shipping parts for the various units are provided in specific instructions for the unit. Select the instructions for the unit to be installed. Also follow specific instructions received with shipping container.

NOTE

If 6800216 shipping container is used, refer to NAVAIR 02B–5DG–4.

b. The overall dimensions and approximate weight of the shipping containers with parts packed for shipment are as follows:

PLANETARY SYSTEM CONTAINER
Part No. 80132
Size . . . . . 38.00 x 25.50 x 28.50 inches
Weight . . . . . 326 pounds
POWER SECTION CONTAINER
Part No. . . . . 6800444 and 6854347
Size . . . . . 60.88 x 51.75 x 125.5 inches
Weight . . . . . 2735 pounds
REDUCTION GEAR CONTAINER
Part No. . . . . 6800399 and 6800440
Size . . . . . .43 x 42.68 x 42.68 inches
Weight . . . . . 931 pounds
TORQUEMETER CONTAINER
Part No. 6858690
Size . . . . 33.07 x 19.76 x 15.5 inches
Weight . . . . . .150 pounds
TORQUEMETER CONTAINER
Part No. 6854340
Size . . . . . .36.0 x 20.0 x 17.0 inches
Weight . . . . . .185 pounds

c. General instructions for all shipping containers are as follows:

(1) To avoid excessive scrapping of shipping container bolts because of thread damage, observe the following precautions.

(a) Remove nuts from all bolts (except on quarter–turn cover bolts).

(b) If bolts do not come out easily, use a drift in an adjacent hole to align holes where bolts are stuck.

(c) Do not use a hammer or mallet to remove tight bolts.

(d) Do not attempt to remove container cover until all bolts have been removed or released.

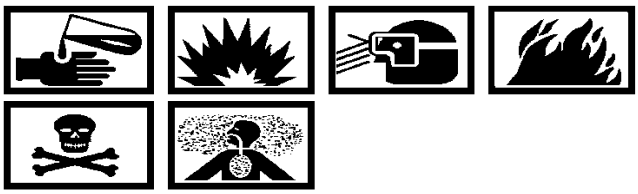

Zinc Chromate Primer TT–P–1757 20

(2) Be sure that steel to magnesium or aluminum external contact points are protected by a coating of TT–P–1757, zinc chromate primer. Primer shall be applied to all shipping container surfaces which come in contact with engine parts.

(3) Inspect the shipping container for cleanliness, damage from handling, and internal dampness.

(4) The container must be free of accumulated water, oil, or other foreign material.

CAUTION

Do not use any gasket adhesive material or other sealant material on the gasket.

(5) Check the closure flange mating surfaces and the gasket for their general condition, including damage from handling and presence of foreign matter.

(6) Use lockwire where specified.

CAUTION

Do not install plastic shipping caps with neoprene gaskets on fuel and oil lines and fittings.

NOTE

All shipping parts, attached to the engine, should be identified by a light yellow color. The coloring may be accomplished by paint or any other acceptable process of a non–corrosive permanent type.

d. Install the appropriate plug, cap, or cover on all the openings of unit that is to be installed in a container. (QA) See figures 2, 5 and 7 for shipping parts and their location.

(1) Tighten aluminum and plastic shipping caps and plugs finger tight unless otherwise specified.

(2) Torque nuts on Benelex shipping covers and fiberboard brackets to 25–40 lb in. (Do not indent.)

(3) Tighten plastic shipping caps, on fuel and oil lines and fittings, to bottom of cap then turn an additional 90° to 120°.

4. **DIGITAL ELECTRONIC TRIM CONTROL INSTALLATION INTO SHIPPING CONTAINER.**

Materials Required

Specification No./Part No.	Nomenclature
MIL–B–121, Grade A, Type II	Barrier material, grease–proofed, waterproofed, flexible
MIL–D–3464, Class I	Desiccant, 16–unit bag (1)
PPP–B–636	Fiberboard carton
PPP–C–843, Type II, Class B	Wadding, creped cellulose
PPP–T–60	Tape, adhesive, pressure sensitive

a. The digital electronic trim control is shipped in a fiberboard carton separate from other engine components. Prepare the control for shipment as follows:

(1) Wrap control and one 16–unit bag of MIL–D–3464, Class 1, with MIL–B–121, Grade A, Type II barrier material and seal with PPP–T–60 tape. (QA)

(2) Place control in PPP–B–636 fiberboard carton and cushion with PPP–C–843, Type II, Class B cellulose wadding. Seal carton with PPP–T–60 tape.

5. **POWER SECTION REMOVAL FROM AND INSTALLATION INTO SHIPPING CONTAINER.**

6. POWER SECTION REMOVAL FROM SHIPPING CONTAINER. (Part No. 6854347 and 6800444.)

Support Equipment Required

Part No./Type Designation	Nomenclature
TD5–500	Tensiometer
23032994	Adapter lifting, power section assembly
23032996	Bracket, turbine lifting
6796859	Adapter, attaching
–––	Wrench, torque (0–150 lb in.)

Materials Required

Specification No./Part No.	Nomenclature
MIL–C–16173, Grade 1	Corrosion preventive compound solvent, hard film

a. Loosen or remove the service receptacle cover (21, figure 1).

WARNING

Failure to reduce air pressure of container to zero psig may cause personal injury and/or damage to shipping container.

b. Loosen air valve and reduce air pressure to zero psig.

CAUTION

Never lift or hoist the power section (or reduction gear) while attached to the lower half of the shipping container. Detach the unit from the container supports and lift it from the container.

c. Remove nuts and bolts which secure the container cover (1) to the base (13). Attach lifting hoist or sling at applicable locations and lift cover up and away from base.

d. Using TD5–500 tensiometer, 23032994 power section lifting adapter and 6796859 adapter or 23032996 bracket, take up hoist until 1875 lbs registers on tensiometer.

WARNING

Prior to removing power section from container mount bolts. Take up hoist until 1875 lbs. registers on tensiometer.

e. Remove nuts, washers, and bolts which secure aft yoke (33) and two rail mounted brackets (36) to the rails.

f. Remove power section, with aft yoke and two rail mounted brackets attached, from container base (13).

g. Remove the two rail mounted brackets (36) from the forward mount brackets (35).

h. Refer to WP 021 00 for installation in parallel rail work stand or turnover stand.

i. Remove the RH forward mount bracket from the RH forward mount spacer; then remove the spacer from the air inlet housing.

j. Remove the LH forward mount bracket from the LH forward mount spacer, then remove the spacer from the air inlet housing.

k. Install appropriate adapter. Refer to WP 021 00.

l. Remove bolt, washer, and locknut which secure the slotted engine mounting bracket (3) to the engine rear mounting bracket and remove aft yoke (33).

m. Remove lockpin from propeller control rear lever.

n. Place loose container parts into storage box (14). Reinstall all container parts previously removed into their respective locations.

Corrosion Preventative Compound MIL–C–16173 Grade 1 (Hard Film) 21

o. Coat the nut end of closure flange, service receptacle, and recoat receptacle bolts with MIL–C–16173 corrosion preventive compound, Grade 1.

7. POWER SECTION PREPARATION FOR INSTALLATION INTO SHIPPING CONTAINER.

Support Equipment Required

Part No./Type Designation	Nomenclature
23032994	Adapter, lifting, power section
23032996	Bracket, turbine lifting
6796859	Adapter, lifting
–––	Wrench, torque (200–1000 lb in.)

Materials Required

Specification No./Part No.	Nomenclature
MIL–B–121, Grade A, Type II	Barrier material, grease–proofed, waterproofed, flexible
MS20995C32	Lockwire, 0.032 inch
PPP–C–843, Type II, Class B	Wadding, creped cellulose
PPP–B–636	Fiberboard carton
PPP–T–60	Tape, adhesive, pressure sensitive

a. Ensure all components and associated hardware identified in table 1 is installed on power section prior to shipment. Retain all items identified in table 1 that are to remain at the Intermediate level. (QA)

b. Ensure all required power section fuel and oil lines are properly installed and secure. (QA)

c. Install appropriate plugs, caps, or covers. (See figure 2.) (QA)

d. Suspend power section at a convenient height, using 23032994 power section lifting adapter and 6796859 adapter and 23032996 bracket. Keep power section reasonably level.

e. Remove lockwire, eight bolts and washers, and the LH and RH mounting pad covers from inlet housing lower mounting pads.

f. Package the bolts, washers and covers in a parts carton.

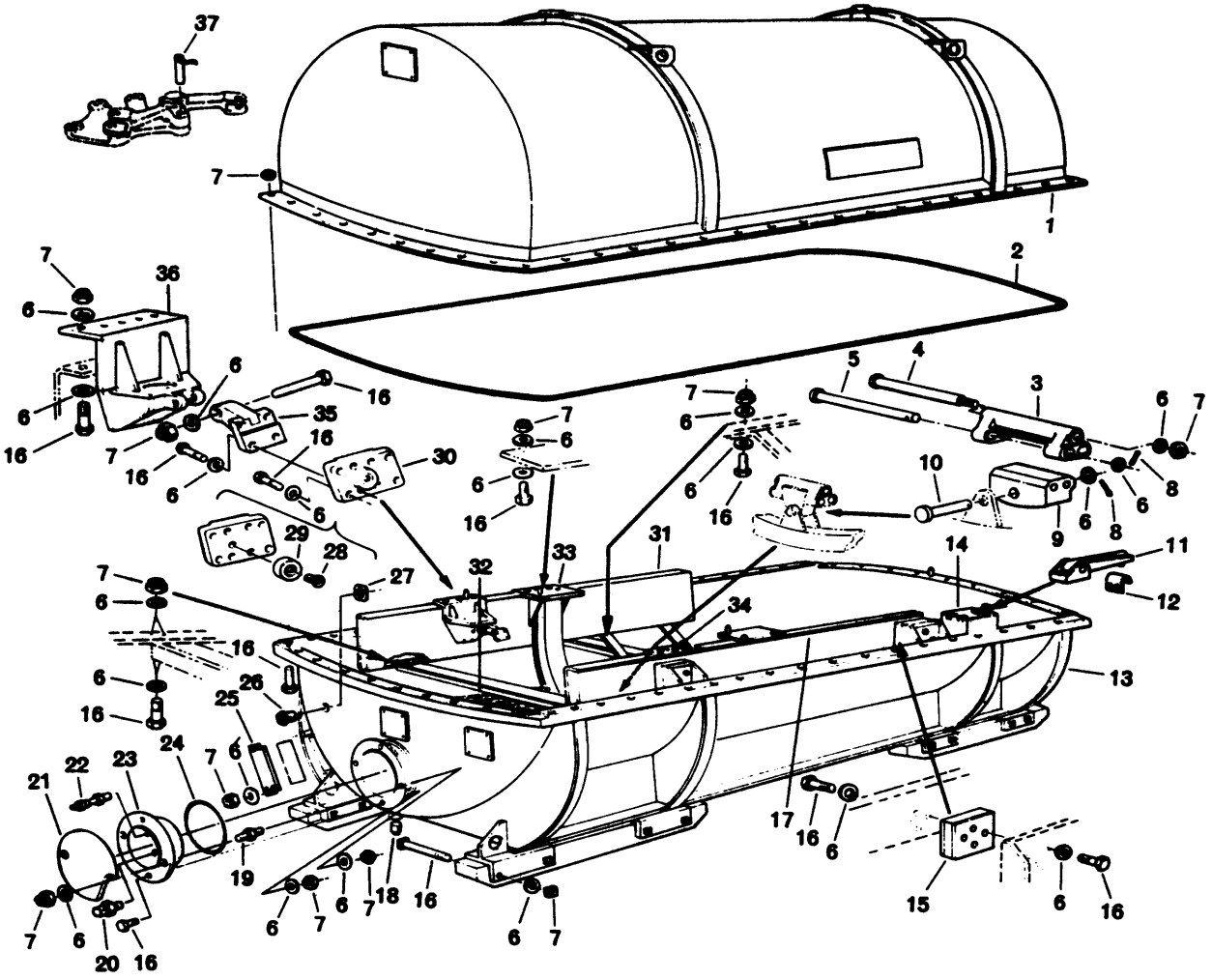

1. Container Cover
2. Closure Gasket
3. Slotted Engine Mounting Bracket
4. Bolt
5. Flat Pin
6. Washer
7. Nut
8. Pin
9. Yoke Bracket
10. Pin
11. Storage Box Latch
12. Storage Box Latch Hook
13. Base
14. Storage Box
15. Shock Mount
16. Bolt
17. RH Rail
18. Plug
19. Bolt
20. Relief Valve
21. Service Receptacle Cover
22. Air Valve
23. Service Receptacle
24. Preformed Packing
25. Engine Record Receptacle Cover
26. Humidity Indicator
27. Humidity Indicator Nut
28. Screw
29. Spacer Pilots
30. Forward Mount LH and RH Spacer
31. LH Rail
32. Desiccant Basket
33. Aft Yoke
34. Accessory Rack
35. Forward Mount Brackets
36. Rail Mounted Brackets
37. Lock Pin

Figure 1. Power Section Shipping Container 6800444 and 6854347

g. Secure spacer pilot (29, Figure 1) to the flat side of right forward mount spacer (30) with flat head screw. Torque screw to 516-660 lb in. (QA)

h. Secure RH forward mount spacer (30), to the air inlet housing RH lower mounting pad with four washers and bolts. Torque bolts 240-300 lb in. and lockwire in pairs with MS20995C32 wire. (QA)

i. Secure RH forward mount bracket (35) to RH forward mount spacer (30) with washers and bolts. Torque bolts to 240-300 lb-in and lockwire in pairs. (QA)

j. Secure LH forward mount spacer (30), with spacer pilot (29) attached, to air inlet housing lower LH mounting pad with washers and bolts. Torque bolts to 240-300 lb-in and lockwire in pairs with MS20885C32 wire. (QA)

k. Secure LH forward mount bracket (35) to LH forward mount spacer (30) with washers and bolts. Torque bolts to 240-300 lb-in and lockwire in pairs with MS20995C32. (QA)

l. Attach the rail mounted brackets (36) to the forward mount brackets (35) with bolts, washers, and locknuts. Tighten nuts firmly then loosen one complete turn.

m. Suspend and align the aft yoke assembly (33) over the engine rear mounting bracket. Secure the slotted engine mounting bracket (3) to the engine rear mounting bracket with bolt, washer, and locknut. Torque nut to 132-156 lb in. (QA)

NOTE

Be sure that slotted engine mounting bracket (3) and yoke bracket (9) are installed in center of aft yoke, and aft yoke with the marking FORWARD is installed toward the front of engine.

Be sure that yoke bracket is secured to aft yoke assembly by flat head pin with the pin head forward.

n. Set propeller control linkage to FLIGHT IDLE position. (QA)

o. Secure the propeller control rear lever to the propeller control bracket with drilled lockpin. Lockwire pin through its drilled hole and around lever using MS20995C32 lockwire. (QA)

p. Wrap fuel flowmeter hoses with MIL-B-121, Grade A, Type II barrier material and seal with PPP-T-60 pressure sensitive tape. (QA)

q. Package hardware removed from power section in manila envelopes.

r. Place packages in PPP-B-636 fiberboard carton, fill voids with PPP-C-843, Type II, Class B cellulose wadding and seal with PPP-T-60 pressure sensitive adhesive tape.

s. Secure carton to accessory rack (not shown).

8. PREPARATION OF SHIPPING CONTAINER. (P/N 6854347 and 6800444.)

a. Loosen or remove the service receptacle cover (21, figure 1).

WARNING

Failure to reduce air pressure of container to zero psi may cause personal injury and/or damage to shipping container.

b. Loosen air valve and reduce air pressure to zero psi.

Table 1. Power Section Requirements

NA 02B-5DG-4 Work Package	Index number of items to be shipped with Power Section	Items to be retained at the "I" Level
F0002-00	1-3	4-46
F0003-00	1-48	
F0004-00	1-72	73-78
F0005-00	1-6, 10-11, 14-18, 20-26, 37	7-9, 12-13, 19, 27-36
F0006-00	4-16	1-3
F0008-00	1-17	
F0009-00	1-18	
F0010-00	1-26	
F0011-00	1-49	
F0012-00	1-21	
F0013-00	1-110	
F0014-00	1-54	
F0015-00	1-21	
F0016-00	6-25	1-5
F0017-00	1-46	
F0018-00	1-74	
F0019-00	1-40	
F0020-00	1-39	
F0021-00	1-30	
F0022-00	1-51	
F0023-00	1-54	
F0024-00	1-50	
F0025-00	1-36	
F0026-00	1-28	
F0027-00	1-25	
F0028-00	1-22	
F0029-00	1-62	
F0030-00	1-22	
F0031-00	1-29	
F0032-00	1-22	
F0033-00	1-19	
F0034-00	1-20	

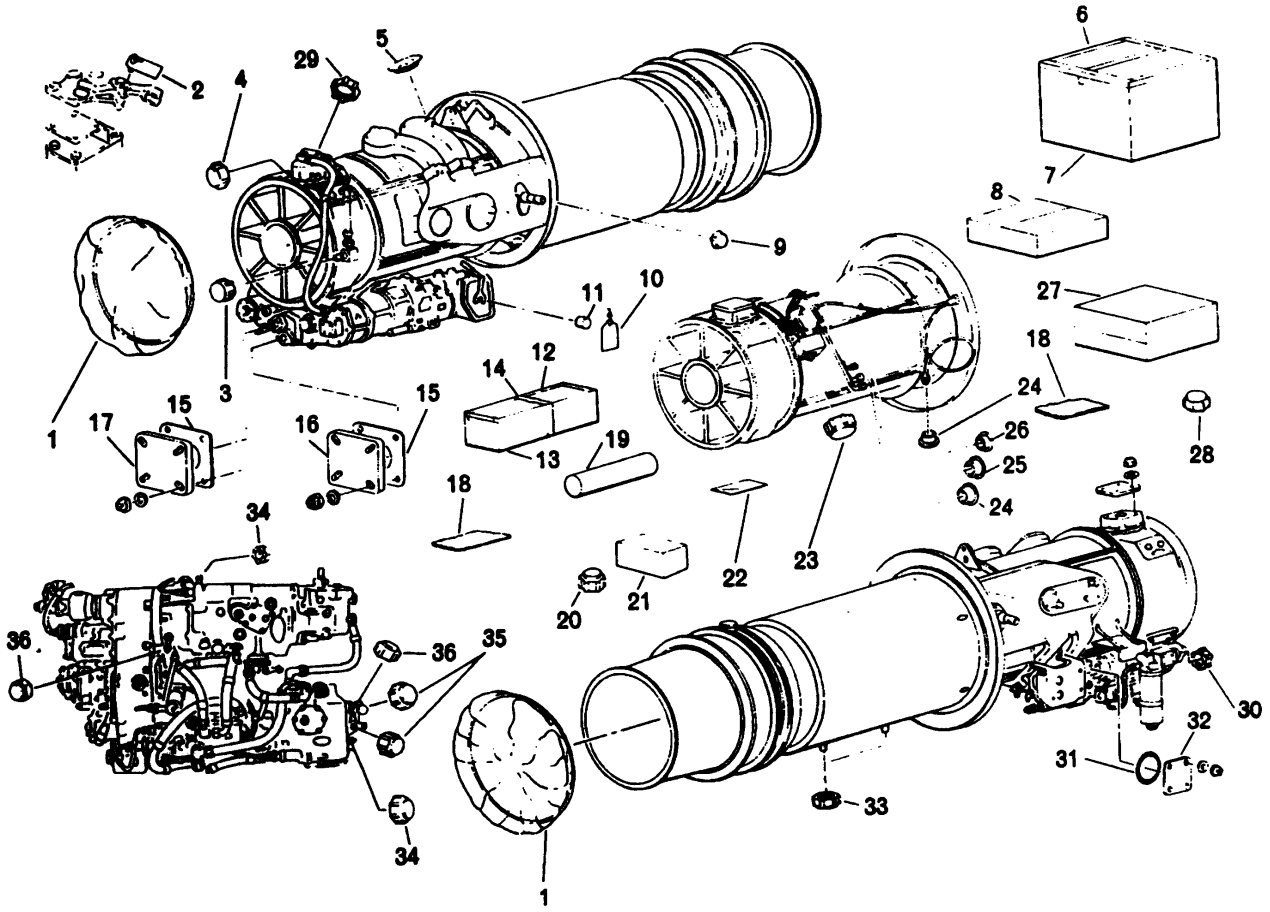

1. Compressor Inlet and Exhaust Cone Cover
2. Control Linkage Caution Tag
3. Anti–icing Air Connection Protective Cap
4. Oil Tank Vent Connection Cap
5. Diffuser Bleed Air Cover
6. Water Resistant Adhesive and Pressure Sensitive Tape
7. C–F Shipping Carton–19X19X16.5 inches–Amplifier Assembly and Relay Box
8. C–F Shipping Carton–17X17X6.5 inches–Amplifier Assembly
9. Labyrinth Seal Vent Cap
10. Fuel Control Preservation Tag
11. Coordinator Spline Cap
12. Fuel Flowmeter Hoses and Power Section Hardware Shipping Carton
13. Shipping Steel Tape
14. Steel Banding Clip
15. Swivel Fitting Flanged Gasket
16. Oil Pump Inlet Cover
17. Oil Pump Outlet Cover
18. Cushioning Material
19. Flowmeter Hose Paper Tubing
20. Relay Box Assembly Protective Cap
21. C–F Shipping–5X5X10 inches–Relay Box and Electronic TD Control
22. Manila Envelope
23. LH Harness Connection Protective Cap
24. TIT Indicator and Coordinator to J2 Amplifier Protective Cap
25. J3 Amplifier to TD Valve Protective Cap
26. Thermocouple Input to J1 Amplifier Protective Cap
27. C–F Shipping Carton–17.5X17.5X10.5 inches–Amplifier Assy
28. Amplifier Assembly Protective Cap
29. Breather Outlet Protective Cap
30. RH Harness Connection Protective Cap
31. O–ring
32. Fuel Inlet Connection Cover
33. Burner Drain Valve Connection Cap
34. Aneroid and TD Valve Motor Cavity Drain Cap
35. Manifold Drain Valve Inlet and TD Valve Outlet Cap
36. Manifold Drain Valve Outlet and Fuel Control Seal Drain Cap

Figure 2. Power Section Shipping Parts

c. Remove nuts and bolts which secure the container cover (1) to the base (13). Attach lifting hoist or sling at applicable locations and lift cover up and away from base.

d. Remove aft yoke (33) from rails (17 and 31). Retain yoke bracket (9) and slotted engine mounting bracket (3) in assembly with aft yoke assembly.

e. Remove the two rail mounted brackets (36) from LH rail and RH rails.

f. Remove forward mount brackets (35) from the two rail mounted brackets.

9. POWER SECTION INSTALLATION INTO SHIPPING CONTAINER. (P/N 6854347 and 6800444.)

Support Equipment Required

Part No./Type Designation	Nomenclature
–––	Wrench, Torque (200–1000 lb in.)
–––	Wrench, Torque (300–2500 lb in.)

CAUTION

Use care to avoid damage to power section from contact with the container.

a. Lower power section into base (13, figure 1) and align guide pin holes in the aft yoke (33) and both rail mounted brackets (36) with their respective guide pins in rails (17 and 31).

b. Stop lowering the power section when guide pin holes are engaged with their respective guide pins and simultaneous contact is made between aft yoke, rail mounted brackets, and rails.

c. Attach rail mounted brackets (36) and aft yoke (33) to rails.

d. Install bolts with washers under head and under nut and with heads down. Tighten nuts firmly then loosen one complete turn.

e. Carefully release the complete power section weight into the container and remove lifting hoist and adapter.

f. Observe the following nut tightening sequence and torque values:

(1) Rail mounted brackets (36) to forward mount brackets 1100–1300 lb in. (QA)

(2) Rail mounted brackets (36) to rails (17 and 31) 480–690 lb in. (QA)

(3) Aft yoke (32) to rails (17 and 31) 480–690 lb in. (QA)

10. FINAL CONTAINER PREPARATION.

Support Equipment Required

Part No./Type Designation	Nomenclature
–––	Wrench, torque (0–100 lb in.)
–––	Wrench, torque (200–1000 lb in.)

Materials Required

Specification No./Part No.	Nomenclature
A–A–59503, Type 1, Grade A or B, Class 1	Nitrogen, dry
MIL–C–16173, Grade 1	Corrosion preventive compound, hard film
MIL–D–3464, Class 1	Desiccant, 16–unit bag (14)
MS20995C32	Lockwire, 0.032 inch

a. If drain plug (18, figure 1) was removed, reinstall and torque to 150–200 lb in. (QA)

b. Place loose container parts in storage box (14), fill box voids with packing material and secure latch.

c. Place fourteen 16–unit bags of MIL–D–3464 desiccant, Class 1, in the desiccant basket (32). (QA)

d. Attach hoist and sling.

e. Be sure the closure gasket (2) is properly seated then lower container cover (1) onto base (13).

f. Remove the lifting hoist or sling.

g. Install container cover bolts, with heads down, and secure with nuts.

h. Tighten one nut on each side of container at the lateral center and at each of the four corners.

i. Torque all nuts to 600–840 lb in. (QA)

Dry Nitrogen A–A–59503 Type I Grade A or B Class 1 **23**

j. Tighten air valve. Introduce dry nitrogen (A–A–59503, Type I, Grade A or B, Class I) into container until 4.5 to 5.5 psig is reached. (See table 2.) (QA)

CAUTION

Check container closure gasket, humidity indicator, service receptacle preformed packing, relief valve, and air valve for pressure leaks, using a soap and water solution. If leaks are found, retighten or repair as necessary. Do not attempt to stop leakage by over–tightening the closure bolts.

k. Check the container pressure within 24 hours after it is pressurized and immediately before shipment. The pressure loss must not be greater than 0.5 psi. See table 3 for variation of pressure with temperature. (QA)

l. Reinstall service receptacle cover (21). Torque nuts 15–25 lb in. Lockwire with 0.032 inch lockwire and lead seal. (QA)

m. Remove engine record receptacle cover (25). Place engine records into the record receptacle. (QA)

n. Reinstall cover and torque nuts to 45–55 lb in. Lockwire with 0.032 inch lockwire and lead seal. (QA)

Corrosion Preventative Compound MIL–C–16173 Grade 1 (Hard Film) **21**

o. Coat the nut end of closure flange, service receptacle, and records receptacle bolts with MIL–C–16173 corrosion preventive compound, Grade 1.

p. Lockwire and lead seal the container cover (1) to the base (13), through the holes provided, at the LH front and RH rear corners. (QA)

q. Check the humidity indicator immediately before shipment. (QA)

r. When the humidity indicator has changed from light blue to lavender (40 ± 3% relative humidity), open the container; inspect the power section for corrosion and change the desiccant.

s. Change the humidity indicator assembly when it has deteriorated in any manner.

Table 2. Shipping Container Temperature Pressure Variation

Temp. °F	Pressure Psi	Temp. °F	Pressure Psi
140	7.6	40	3.9
130	7.3	30	3.5
120	6.9	20	3.2
110	6.5	10	2.8
100	6.1	0	2.4
90	5.8	–10	2.0
80	5.4	–20	1.7
70	5.0	–30	1.3
60	4.6	–40	0.9
50	4.3		

11. **PLANETARY SYSTEM REMOVAL FROM AND INSTALLATION INTO SHIPPING CONTAINER.**

12. PLANETARY SYSTEM REMOVAL FROM SHIPPING CONTAINER.

Support Equipment Required

Part No./Type Designation	Nomenclature
6796010	Propeller shaft and planetary gear assembly lift
6796834	Propeller shaft and planetary gear stand

a. If container is closed, depress relief valve (1, figure 3) to relieve any pressure or vacuum. Unlatch cover latches (2), fore and aft ends first, sides last. Remove cover (3) and turn upside down. Remove desiccant from basket (4).

b. Unlatch retaining strap (5) over planetary system assembly (9) and swing outside container.

c. Unlatch cradles (6) over planetary system assembly (9) (2 places).

d. Attach propeller shaft and planetary gear assembly lift (P/N 6796010) to threads on rear carrier of planetary system assembly (9). Remove planetary system assembly (9) from container assembly base (10) and place in prop shaft and planetary gear stand (P/N 6796834). Replace cradles (6) and retaining straps (5).

e. Release 1/4 turn fasteners on parts box (7) and open lid.

f. Remove sun gear (8). Replace lid.

13. PREPARATION OF SHIPPING CONTAINER.

a. Depress shipping container relief valve (1, figure 3) to relieve pressure or vacuum.

b. Unlatch cover latches (2), fore and aft ends first, sides last.

c. Remove cover (3) and turn upside down.

d. Release 1/4 turn fasteners and open parts box (7).

e. Release two latches on retaining strap (5) and swing strap outside container assembly base (10).

f. Release two latches on cradle and open cradles (6).

14. PLANETARY SYSTEM INSTALLATION INTO SHIPPING CONTAINER.

Support Equipment Required

Part No./Type Designation	Nomenclature
––––	Torque wrench (0–25 lb ft.)

Materials Required

Specification No./Part No.	Nomenclature
MIL–D–3464, Class 1	Desiccant bag

a. Place sun gear (8, figure 3) in parts box (7) and secure lid.

b. Place planetary system assembly (9) in container assembly base (10) as follows.

(1) Using propeller shaft and planetary gear assembly lift (P/N 6796010) position shaft of planetary system assembly (9) so that one of the five planet gears is at the twelve o'clock position.

(2) Assure planetary system assembly (9) is level.

(3) Lower planetary system assembly (9) into cradles (6) with long shaft towards forward end.

c. Bring cradles (6) (2 places) over shaft of planetary system assembly (9). Fasten latches. Torque to 10–12 lb ft.

d. Bring retaining strap (5) over gears of planetary system assembly (9) and fasten latches. Torque to 10–12 lb ft.

e. Place eight 16–unit bags of desiccant, class 1 in the desiccant basket (4).

f. Replace cover (3) and secure side latches (2) first, then fore and aft latches. If latches are loose, torque to 10–12 lb ft.

15. **REDUCTION GEAR REMOVAL FROM AND INSTALLATION INTO SHIPPING CONTAINER.**

16. REDUCTION GEAR REMOVAL FROM SHIPPING CONTAINER.

Support Equipment Required

Part No./Type Designation	Nomenclature
6797682	Adapter, lifting, reduction gear

a. Remove container cover (1, figure 4).

b. Remove propeller control linkage. Refer to WP 038 00.

c. Attach 6797682 reduction gear lifting adapter to reduction gear.

d. Remove nuts, washers, and bolts which secure the two side mounting brackets (3) and the forward mounting flange bracket (8) to the LH and RH rails (4).

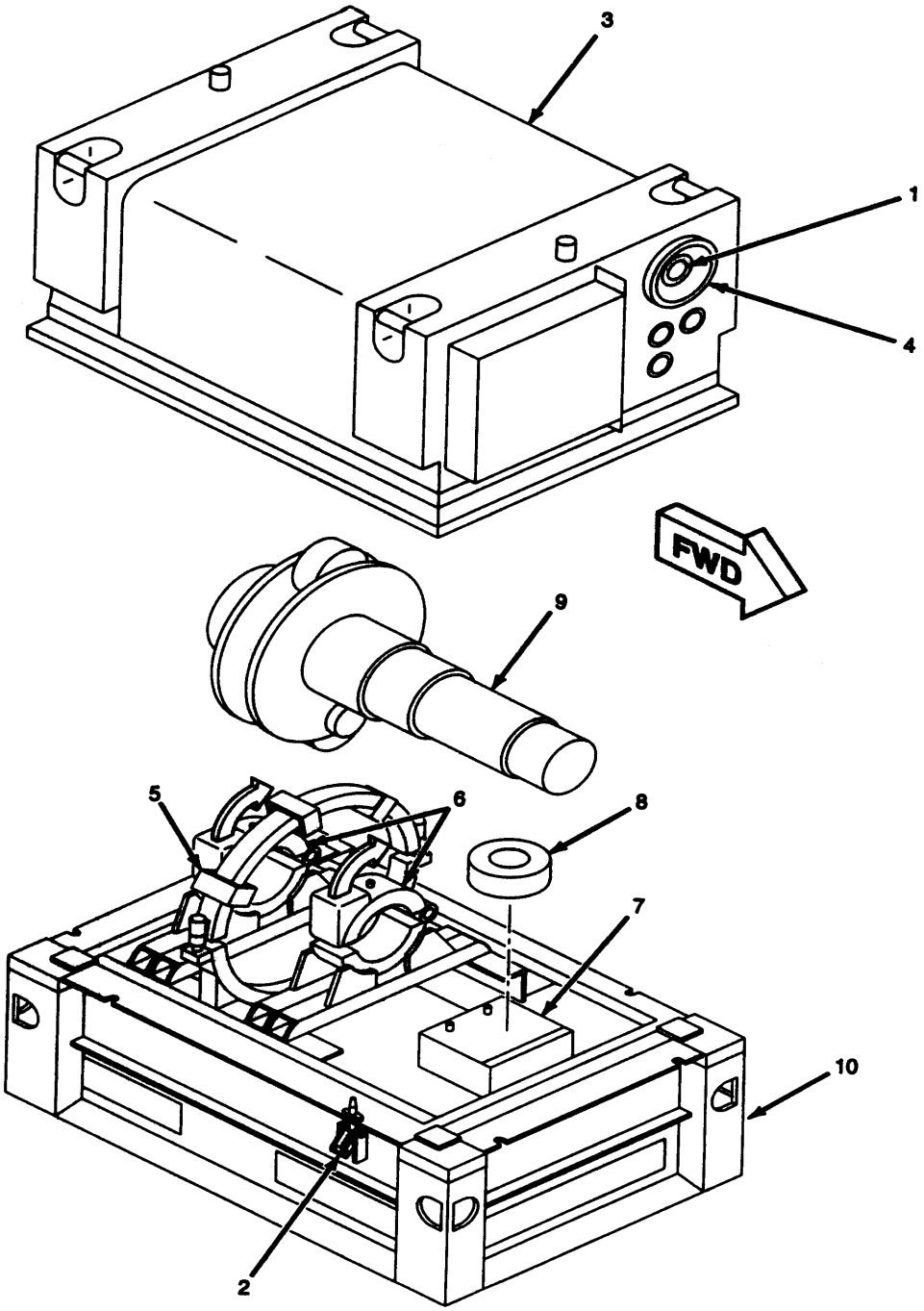

1. Relief Valve
2. Cover Latches
3. Cover
4. Desiccant Basket
5. Retaining Strap
6. Cradle
7. Parts Box
8. Sun Gear
9. Planetary System Assembly
10. Base

Figure 3. Planetary System Shipping and Storage Container

e. Lift the reduction gear (with brackets attached) from base (5).

f. Remove the two side mounting brackets and forward mounting flange bracket from reduction gear.

g. Remove packaged items from container base.

h. Refer to WP 038 00 for installation of reduction gear unit in turnover stand.

i. Place loose container parts into a bag and secure to the desiccant basket. Reinstall all container parts previously removed into their respective positions.

j. Reinstall cover (1).

k. Remove records.

17. REDUCTION GEAR PREPARATION FOR INSTALLATION INTO SHIPPING CONTAINER.

Support Equipment Required

Part No./Type Designation	Nomenclature
6797682	Adapter, lifting, reduction gear
–––	Wrench, torque (0–300 lb in.)
–––	Wrench, torque (200–1000 lb in.)

Materials Required

Specification No./Part No.	Nomenclature
MIL–B–121, Grade A, Type II	Barrier material, grease–proofed, waterproofed, flexible
MIL–C–16173, Grade 2	Corrosion preventive compound, soft film
MS20995C32	Lockwire, 0.032 inch
MIL-PRF-680, Type II	Solvent, dry cleaning
PPP–T–60	Tape, adhesive, pressure sensitive

a. Ensure all components and associated hardware identified in table 3 is installed on reduction gear assembly prior to shipment. Retain all items identified in table 3 that are to remain at the Intermediate level. (QA)

b. Install the appropriate plugs, caps, or covers (see Figure 5). (QA)

c. Using 6797682 reduction gear lifting adapter, suspend the reduction gear at a convenient height, keeping it reasonably level.

d. Secure the two side mounting brackets (3, figure 4) to the reduction gear side mounting pads with bolts and washers. Torque bolts to 600–720 lb in. and lockwire in pairs using 0.032 inch lockwire. (QA)

NOTE

Install flange bracket with flange face bolt holes down. Alternately tighten bolts to half of minimum torque; then repeat the process, tightening to specified torque.

e. Secure the forward mounting flange bracket (8) to the forward flange face of the reduction gear with bolts and washers. Torque bolts to 140–180 lb in. (QA)

f. Remove the two power section to reduction gear support struts from the reduction gear.

g. Attach strut–to–reduction gear attaching parts to reduction gear eyebolts.

h. Secure the power section to reduction gear struts to the container base with thumb screws or flat head pins.

i. Package the strut–to–power section attaching parts in MIL–B–121, Grade A, Type II barrier material, and seal with PPP–T–60 pressure sensitive adhesive tape; then tape package to struts avoiding tape to metal contact.

j. If 6800440 container is used, reassemble the attaching parts onto the struts, wrap the struts with MIL–B–121, Grade A, Type II barrier material and seal with PPP–T–60 pressure sensitive adhesive tape. Install the struts into the two parallel sets of accessory mounting clips, in the base, and secure with lockwire.

k. Secure the propeller control intermediate link rod (with air inlet housing attaching parts assembled on one end) to the aft control rod support, located diagonally in the base, with flat head pin.

l. Wrap aft support and rod end bearing and control rod at the forward support, with MIL–B–121, Grade A, Type II barrier material, and secure with PPP–T–60 pressure sensitive adhesive tape. Avoid tape to metal contact.

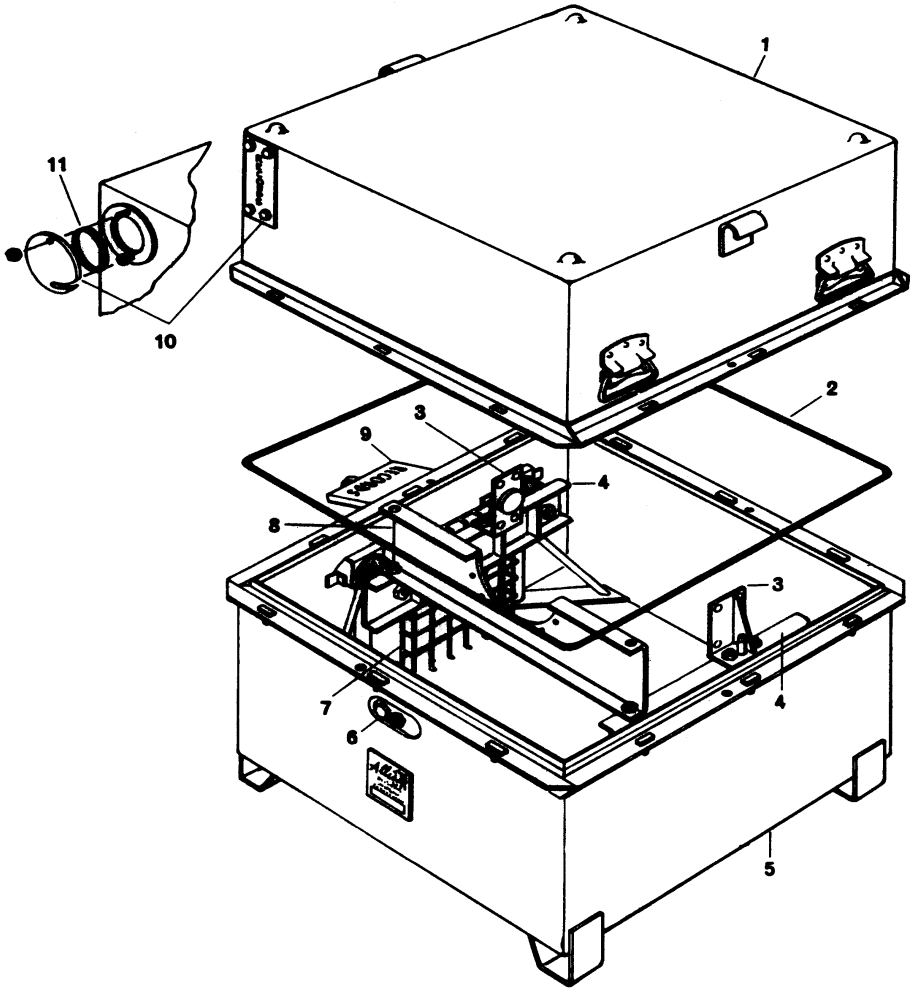

1. Cover
2. Closure Gasket
3. Side Mounting Bracket
4. Rail
5. Base
6. Humidity Indicator
7. Desiccant Basket
8. Forward Mounting Flange Bracket
9. Records Receptacle (container no. 6800440)
10. Records Receptacle
11. Preformed Packing

Figure 4. Reduction Gear Shipping Container

Table 3. Reduction Gear Assembly Requirements

NA 02B–5DG–4 Work Package	Index number of items to be shipped with Reduction Gear Assembly	Items to be retained at the "I" Level
F0058–00	6–25, 35–37	1–5, 26–34, 38
F0059–00	1–19	
F0060–00	1–4, 12–16	5–11
F0061–00	1–52	
F0062–00	1–71	
F0063–00	1–45	
F0064–00	1–43	
F0065–00	1–52	
F0066–00	1–57	
F0067–00	1–29	
F0068–00	1–62	
F0069–00	1–13	
F0070–00	1–16	
F0082–00	1–22	

m. Secure control rod to forward support with flat head pin.

n. If 6800440 container is used, wrap propeller control intermediate link rod, rod ends, and attaching parts in MIL–B–121 Grade A, Type II barrier material and seal with PPP–T–60 pressure sensitive adhesive tape. (QA)

o. Install package into two accessory mounting clips, positioned diagonally in the base, and lockwire.

p. Set propeller control linkage to FLIGHT IDLE and insert linkage retaining pin through holes in linkage. (QA)

q. Secure pin and attach tag with lockwire through hole in pin. Tag should be clearly marked: CAUTION –Remove this pin before attempting to operate prop linkage. (QA)

r. Secure propeller control linkage to reduction gear front housing with propeller control shaft fixtures.

s. Install pinion gear shaft shipping plug, key washer, and spanner nut. Tighten nut one–quarter turn past finger tight and secure with key washer.

t. Package twelve of the sixteen self–locking nuts which secure the torquemeter housing to the reduction gear in a suitable envelope and attach to the oil pump housing with tape. Use the remaining four nuts to secure the torquemeter mounting cover to the reduction gear.

u. Treat the propeller shaft as follows:

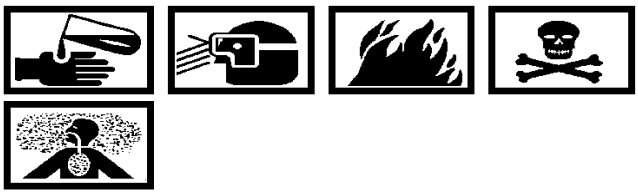

Dry Cleaning Solvent
MIL–PRF–680, Type II **3**

(1) Clean shaft with MIL–PRF–680 Type II solvent.

Corrosion Preventative Compound
MIL–C–16173 Grade 2 (Soft Film) **22**

(2) Coat shaft with MIL–C–16173, Grade 2 corrosion preventive.

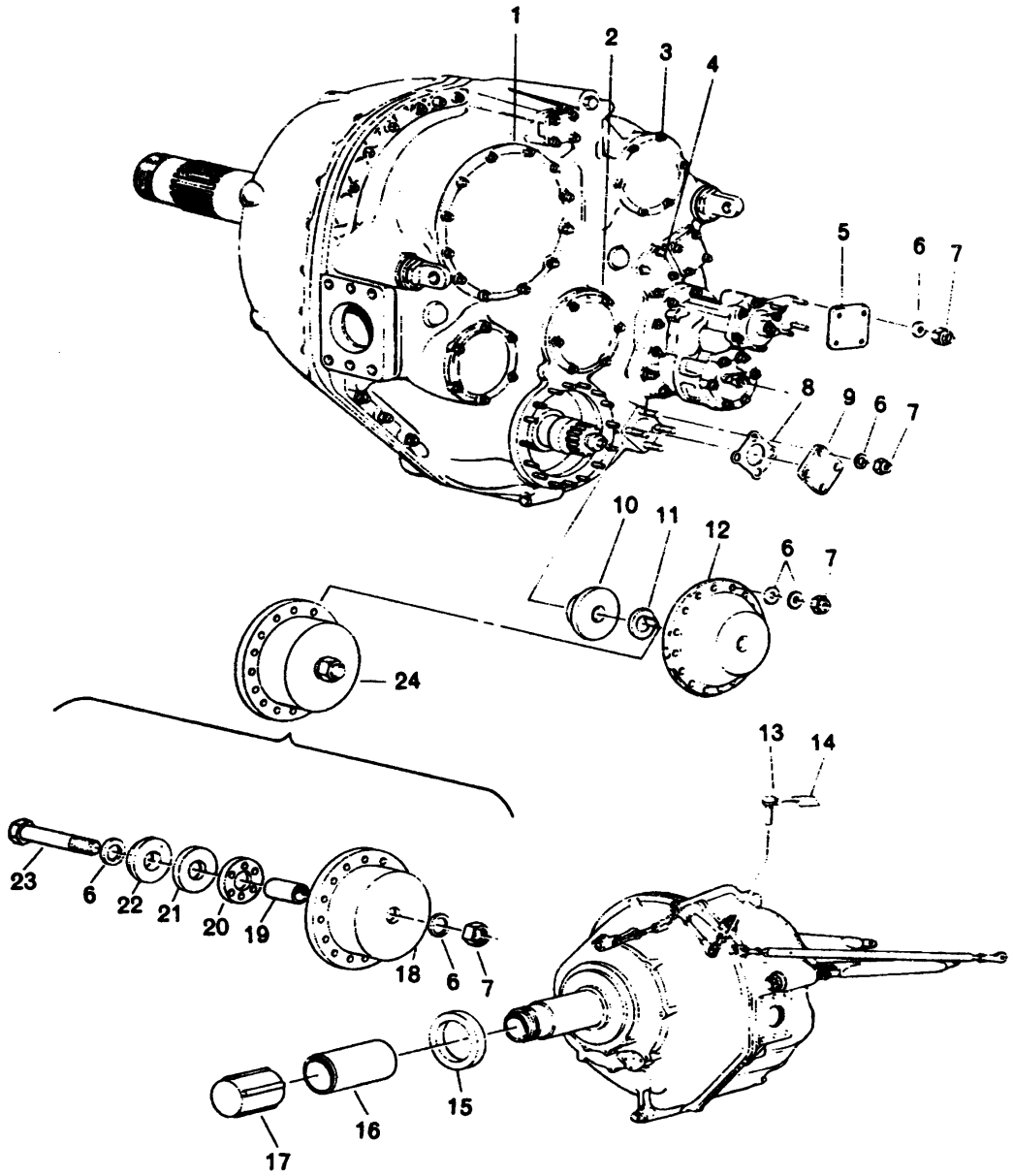

1. Alternator Pad Shipping Cover Assembly
2. Starter Pad Shipping Cover Assembly
3. Hydraulic Pump Pad Shipping Cover Assembly
4. Tachometer Drive Pad Shipping Cover Assembly
5. Oil Inlet Shipping Cover Assembly
6. Plain Washer
7. Hexagon Self–locking Nut
8. Square Flange 4–bolt Gasket
9. Oil Pump Outlet Shipping Cover Assembly
10. Pinion Shaft Shipping Plug
11. Key Washer
12. Torquemeter Mounting Cover
13. Pin
14. Control Linkage Warning Tag
15. Propeller Shaft Shipping Gasket
16. Propeller Shaft Protector Shipping Sleeve
17. Propeller Shaft Plastic Shipping Cap
18. Torquemeter Mounting Cover
19. Vibration Dampening Cover
20. Vibration Dampening Spacer
21. Vibration Dampening Ring
22. Vibration Dampening Pilot
23. Hexagon Bolt
24. Torquemeter Mounting Cover Assembly (use until exhausted)

Figure 5. Reduction Gear Assembly Shipping Parts

NOTE

Allow corrosion preventive compound to set up.

(3) Install propeller shaft shipping gasket, protector, and thread protector cap. (QA)

(4) Wrap propeller shaft with barrier material MIL–B–121 Grade A, Type II and secure in place with tape PPP–T–60. (QA)

18. PREPARATION OF SHIPPING CONTAINER.

a. Turn quarter–turn container cover bolts to align with flange slots. Remove cover (1, figure 4) from base (5).

NOTE

If 6800440 container is used, the closure flange bolts, washers, and nuts must be removed before removing the container cover.

b. Remove the forward mounting flange bracket (8) from the LH and RH rails (4).

c. Remove the two side mounting brackets (3) from the LH and RH rails.

19. REDUCTION GEAR INSTALLATION INTO SHIPPING CONTAINER.

Support Equipment Required

Part No./Type Designation	Nomenclature
–––	Wrench, torque (200–1000 lb in.)

a. Lower reduction gear into container base (5, figure 4) ensuring that the guide–pin holes in the two side mounting brackets (3) align and engage with the guide pins on the LH and RH rails (4).

CAUTION

Use care to avoid damage to the unit from contact with the container.

b. Install four bolts with heads down through the LH and RH rails and mating holes in the side mounting brackets. Install washers and locknuts on the bolts and tighten firmly then loosen one complete turn.

c. Install two bolts with heads down through the LH and RH rails and mating holes in the forward mounting flange bracket (8). Install washers and locknuts on the bolts and tighten firmly then loosen one complete turn.

d. Remove reduction gear lifting adapter. Torque six mounting bracket nuts to 540–660 lb in. (QA)

20. FINAL CONTAINER PREPARATION.

Support Equipment Required

Part No./Type Designation	Nomenclature
–––	Wrench, torque (0–300 lb in.)
–––	Wrench, torque (200–1000 lb in.)

Materials Required

Specification No./Part No.	Nomenclature
MIL–C–16173, Grade 1	Corrosion preventive compound, hard film
MIL–D–3464, Class 1	Desiccant, 16–unit bag (6)
MS20995C32	Lockwire, 0.032 inch

a. Place six 16–unit bags of MIL–D–3464 desiccant, Class 1, into the desiccant basket (7, figure 4). (QA)

b. Loosen nuts on quarter–turn cover bolts sufficiently for the heads to protrude through the slots in the closure flange. Be sure that container closure gasket (2) is properly seated on the closure flange and that quarter–turn bolt heads are aligned with the flange slots.

c. Lower cover (1) onto base (5). Twist closure flange bolts one–quarter turn, hold in this position and torque nuts to 85–110 lb in. (QA)

Corrosion Preventative Compound MIL–C–16173 Grade 1 (Hard Film) 21

d. Coat bolt threads with MIL–C–16173 Grade 1 corrosion preventive compound.

e. Lockwire and lead seal container cover to base. (QA)

f. If 6800440 container is used, install closure flange bolts with heads down and secure with washers and locknuts.

g. Torque nuts to 216–336 lb in. (QA)

Corrosion Preventative Compound MIL–C–16173 Grade 1 (Hard Film) 21

h. Coat bolt threads with MIL–C–16173, Grade 1 corrosion preventive compound.

i. Remove or open records receptacle cover (10) and place one copy of installation instructions (if available) and applicable reduction gear records into receptacle. (QA)

j. Secure cover with preformed packing (11) and torque to 45–55 lb in. for cylindrical cover or to 30–40 lb in. for rectangular cover. Lockwire and lead seal cover. (QA)

k. Check the humidity indicator (6) within 24 hours after reduction gear installation into the container and immediately before shipment. (QA)

l. When the indicator changes from light blue to lavender (40 ± 3% relative humidity), open the container and inspect the reduction gear for corrosion, also change the desiccant.

m. Change the humidity indicator when it has deteriorated in any manner or if it fails to change back to a light blue color within a reasonable length of time after new desiccant has been added.

21. **TORQUEMETER REMOVAL FROM AND INSTALLATION INTO SHIPPING CONTAINER. (P/N 6848690)**

22. TORQUEMETER REMOVAL FROM SHIPPING CONTAINER. (P/N 6848690)

a. Remove lockwire and release the four container cover catches. Lift the container cover (1, figure 6) from the container base (3).

CAUTION

Use extreme care when removing shaft from container to avoid damage to the exciter teeth and mid bearing inner ring.

b. Remove the torquemeter housing, torquemeter shaft, safety coupling and envelopes containing loose parts from the base.

c. Reinstall the cover on the base and lock the four catches.

d. Remove records cover (10) nuts and washers.

23. PREPARATION OF SHIPPING CONTAINER. (P/N 6848690)

a. Apply sufficient weight to cover (1, figure 6), above each container cover catch, to establish firm splitline contact with base (3). Be sure that adjustable catch lever (7) has sufficient tension to prevent the yoke (5) from being loose on the strike (8). If any catch lever evidences looseness or weak tension, adjust as follows:

(1) Release tension on catch lever by lifting latching lever (6) until yoke is free of strike.

(2) Rotate the yoke and latching lever downward until the adjustment screw in the catch lever is accessible.

(3) Turn the adjustment screw counter–clockwise to increase tension. The full range of the yoke adjustment is 5/32 inch or ten half turns of the adjustment screw.

(4) Relock and recheck the tension until the required adjustment is obtained.

b. Release the four catches and remove cover (1).

c. Clean the base and cover assembly packing material to remove all solvents, lubricants, and foreign material which might contaminate detail parts of the torquemeter assembly.

d. Be sure humidity indicator (4) is serviceable and secure in the container base.

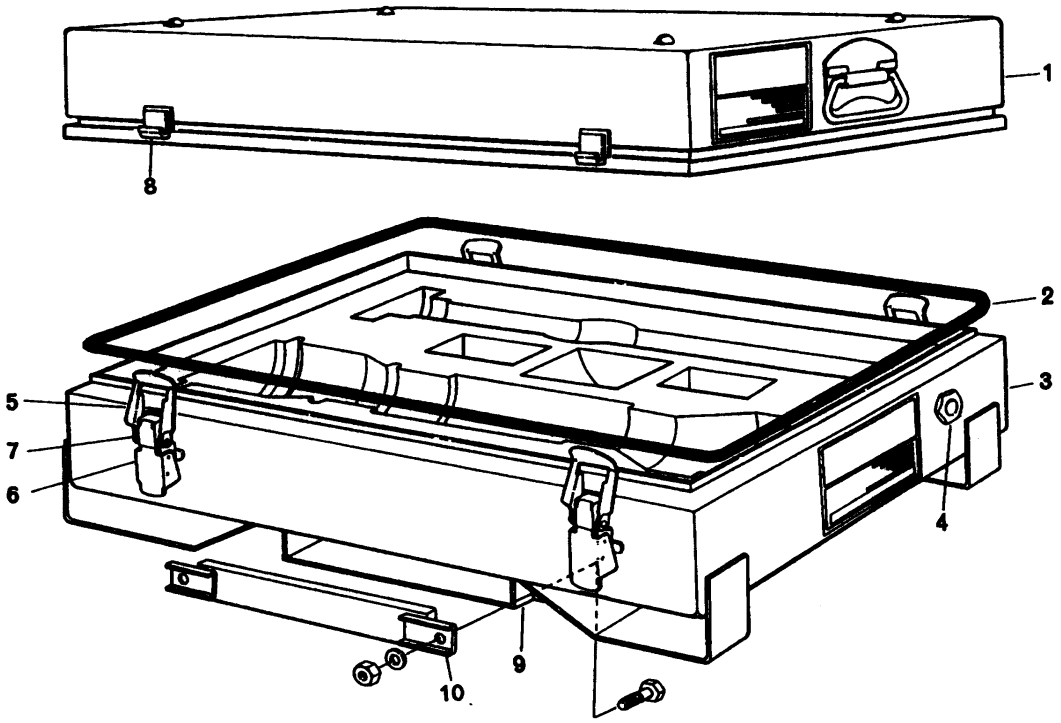

1. Cover
2. Closure Gasket
3. Base
4. Humidity Indicator
5. Yoke
6. Latching Lever
7. Adjustable Catch Lever
8. Strike
9. Records Receptacle
10. Records Receptacle Cover

Figure 6. Torquemeter Shipping Container 6848690

24. TORQUEMETER PREPARATION FOR INSTALLATION INTO SHIPPING CONTAINER (P/N 6848690).

Support Equipment Required

Part No./Type Designation	Nomenclature
6800372	Plug, shipping, torquemeter mid bearing
---	Wrench, torque (0–150 lb in.)

Materials Required

Specification No./Part No.	Nomenclature
MIL–B–121, Grade A, Type II	Barrier material, grease–proofed, waterproofed, flexible
MIL–C–16173, Grade 1	Corrosion preventive compound, hard film
MIL–PRF–23699	Lubricating Oil
MS20995C32	Lockwire, 0.032 inch
PPP–T–60	Tape, adhesive, pressure sensitive

a. Ensure all components and associated hardware identified in table 4 are installed on torquemeter assembly prior to shipment. Retain all items identified in table 4 that are to remain at the Intermediate level. (QA)

b. Install appropriate plugs, caps, or covers (see Figure 7). (QA)

c. Separate the torquemeter and coupling assembly into the following subassemblies:

(1) Safety coupling.

(2) Torquemeter inner and outer shaft (leave mid–bearing inner ring assembled to outer shaft.)

(3) Torquemeter housing with mid–bearing, minus inner ring, installed.

d. Install pick–up protective seal cap.

e. Package pick–up shims in MIL–B–121, Grade A, type II barrier material.

f. Install 6800372 mid bearing shipping plug (3, figure 7) into outer ring and rollers.

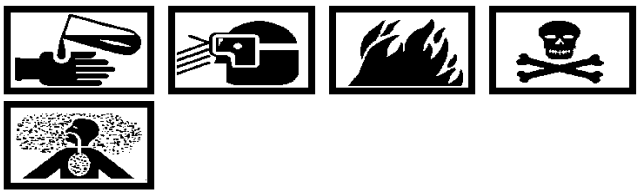

Lubricating Oil, MIL–PRF–23699 2

g. Apply a light coat of MIL–PRF–23699 lubricating oil to the safety coupling and wrap in MIL–B–121, Grade A, Type II barrier material. (QA)

h. Secure the anti–icing dome cover to the anti–icer cowl duct by wrapping with MIL–B–121, Grade A, Type II barrier material and PPP–T–60 pressure sensitive adhesive tape. Avoid tape to metal contact. (QA)

i. Package anti–icing shroud brackets and pickup shims in MIL–B–121, Grade A, type II barrier material.

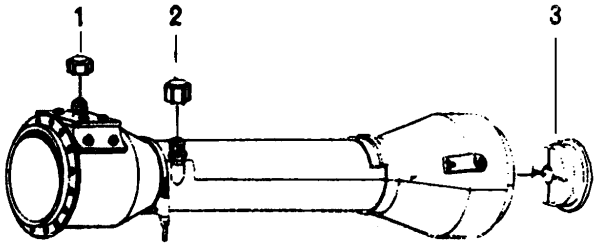

1. Pickup Cap
2. Anti–icing Air Inlet Cap
3. Mid Bearing Shipping Plug

Figure 7. Torquemeter Shipping Parts

Lubricating Oil, MIL–PRF–23699 2

j. Apply a light coat of MIL–PRF–23699 lubricating oil to the mid bearing inner ring and wrap with MIL–B–121, Grade A, Type II barrier material. (QA)

k. Apply a light coat of MIL–PRF–23699 lubricating oil to the mid bearing assembly (in the torquemeter housing) and insert the mid bearing shipping plug into the mid bearing outer ring and rollers. (QA)

l. Remove records receptacle cover (10, figure 6).

m. Place a copy of installation instructions (if available) and torquemeter records in a plastic engine records envelope and place into records receptacle (9). (QA)

n. Reinstall cover (10) and torque nuts to 60–80 lb in. and lockwire. (QA)

Corrosion Preventative Compound MIL–C–16173 Grade 1 (Hard Film) 21

o. Coat the nut end of records receptacle bolts with MIL–C–16173, Grade 1 corrosion preventive compound.

25. TORQUEMETER INSTALLATION INTO SHIPPING CONTAINER. (P/N 6848690)

a. Lower the torquemeter housing into pocket of the container base with the pick–up upright and at the front end. Adjust the clamp bolt in a vertical position on either side of the housing.

CAUTION

Use extreme care when placing shaft into container to avoid damage to the exciter teeth and mid bearing inner ring.

b. Lower the torquemeter shaft into pocket of the container base with the exciter teeth at the front end.

c. Insert the safety coupling into pocket of the container base.

d. Insert the packing and shim envelopes into pocket and the hardware envelope into pocket of the base.

26. FINAL CONTAINER PREPARATION. (P/N 6848690)

Materials Required

Specification No./Part No.	Nomenclature
MIL–D–3464, Class 1	Desiccant (2)
MS20995C32	Lockwire, 0.032 inch

a. Place two 16–unit bag of desiccant, MIL–D–3464, class 1, into container. (QA)

b. Be sure the closure gasket is properly seated on the flange. Lower the cover (1, figure 6) onto the base (3).

c. Secure the cover to the base with four catches.

d. Lockwire. (QA)

e. Check the humidity indicator (4) within 24 hours after torquemeter installation into the container and immediately before the time of actual shipment. (QA)

f. When the indicator changes from light blue to lavender (40 ± 3% relative humidity), open the container and inspect the torquemeter for corrosion, also change the desiccant.

g. Change the humidity indicator when it has deteriorated in any manner or if it fails to change back to a light blue color within a reasonable length of time after new desiccant has been added.

27. **TORQUEMETER REMOVAL FROM AND INSTALLATION INTO SHIPPING CONTAINER. (P/N 6854340)**

28. TORQUEMETER REMOVAL FROM SHIPPING CONTAINER. (P/N 6854340.)

WARNING

Failure to reduce air pressure of container to zero psig may cause personal injury and/or damage to shipping container.

a. Loosen air valve and reduce air pressure to zero psig.

b. Remove cover (1, figure 8) from base (4).

c. Remove locknuts, washers, and bolts which secure the torquemeter aft mount (3,) and the torquemeter forward mount (7) to the base (4).

d. Remove torquemeter assembly, with forward and aft mounts attached, from container base (4).

e. Remove large nut and washer from torquemeter shaft adapter (8).

f. Remove torquemeter forward mount (7) from torquemeter housing.

CAUTION

Use extreme care when removing inner shaft from housing to avoid damage to exciter teeth and mid bearing inner ring.

g. Remove torquemeter inner shaft from torquemeter housing by pulling forward. Place shaft on a protected surface.

h. Remove torquemeter shaft adapter (8) from inner shaft.

i. Remove anti–icing dome cowl, cowl cover, and cowl duct from torquemeter housing.

j. Remove torquemeter aft mount (3) from torquemeter housing.

k. Remove the cartons containing the torquemeter loose parts from the container.

l. Reinstall all container parts previously removed into their respective positions. Place loose fasteners into a bag and secure to the desiccant basket.

NOTE

The connecting rod and spacer are to be used when the container is stored or shipped empty.

m. Remove connecting rod spacer (10) and connecting rod (9) from base of container. Place spacer between the torquemeter forward mount (7) and torquemeter aft mount (3) and secure with connecting rod, washer, and locknut.

n. Reinstall cover (1). Install bolts, lockwashers, and nuts fingertight.

29. PREPARATION OF SHIPPING CONTAINER. (P/N 6854340.)

WARNING

Failure to reduce air pressure of container to zero psig may cause personal injury and/or damage to shipping container.

a. Loosen air valve (6) and reduce air pressure to zero psig.

b. Remove cover (1) from base (4).

c. Remove locknut and washer from one end of the connecting rod (9) and remove connecting rod and connecting rod spacer (10). Reinstall rod, washer and nut and store rod and spacer assembly into the loop type cushioned clamps in the base.

d. Remove torquemeter aft mount (3) and torquemeter forward mount (7) from base (4.)

e. Remove torquemeter shaft adapter (8) from torquemeter forward mount (7).

Table 4. Torquemeter Requirements

NA 02B–5DG–4 Work Package	Index number of items to be shipped with Torquemeter	Items to be retained at the “I” Level
F0056–00	27–71	1–26, 72–73

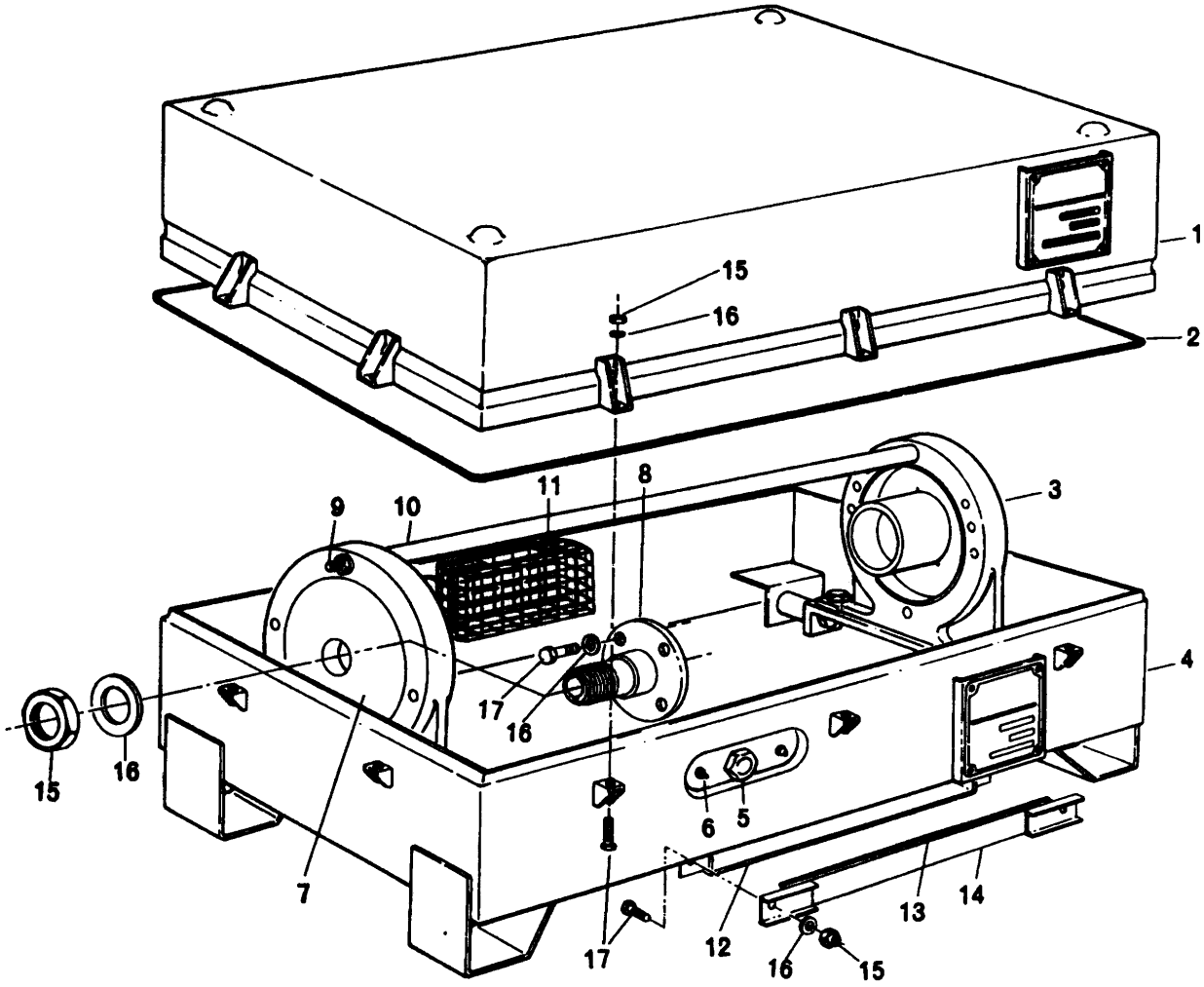

1. Cover Assembly
2. Closure Gasket
3. Torquemeter Aft Mounting
4. Base
5. Humidity Indicator
6. Air Valve
7. Torquemeter Forward Mount
8. Torquemeter Shaft Adapter
9. Connecting Rod
10. Connecting Rod Spacer
11. Desiccant Basket
12. Records Receptacle
13. Records Receptacle Cover Gasket
14. Records Receptacle Cover
15. Nut
16. Washer
17. Bolt

Figure 8. Torquemeter Shipping Container 6854340

30. TORQUEMETER PREPARATION FOR INSTALLATION INTO SHIPPING CONTAINER. (P/N 6854340)

Support Equipment Required

Part No./Type Designation	Nomenclature
–––	Wrench, torque (0–600 lb in.)

Materials Required

Specification No./Part No.	Nomenclature
MIL–B–121, Grade A, Type II	Barrier material, grease–proofed, waterproofed, flexible
MIL–PRF–23699	Lubricating oil
MS20995C32	Lockwire, 0.032 inch
PPP–T–60	Tape, adhesive, pressure sensitive

a. Separate the torquemeter coupling assembly into the following sub–assemblies:

(1) Safety coupling.

(2) Torquemeter inner and outer shaft (leave mid bearing inner ring assembled on outer shaft).

(3) Torquemeter housing, with anti–icing shroud installed.

(4) Mid bearing outer ring and lock tube.

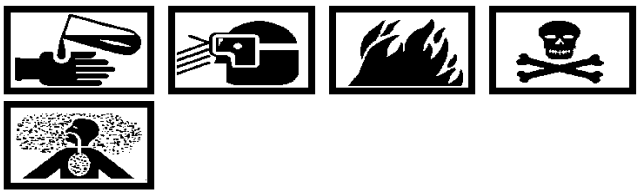

Lubricating Oil, MIL–PRF–23699 2

b. Apply a light coat of MIL–PRF–23699 lubricating oil to mid bearing inner ring and wrap with MIL–B–121, Grade A, Type II barrier material. Secure paper to shaft with PPP–T–60 pressure sensitive adhesive tape. Avoid tape to metal contact. (QA)

c. Attach the torquemeter shaft adapter (8, figure 8) to the inner shaft with four bolts and washers. Torque bolts to 120–180 lb in. and lockwire. (QA)

d. Remove anti–icing dome cowl, cowl cover, and cowl duct from torquemeter housing.

e. Attach the torquemeter housing and two anti–icing shroud brackets to the torquemeter aft mount (3) with eight bolts, washers, and locknuts. Torque nuts to 120–180 lb in. (QA)

f. Remove torquemeter pickup from torquemeter housing.

CAUTION

To avoid damage to exciter teeth, use extreme care when inserting shaft into housing.

g. Insert the torquemeter shaft into the torquemeter housing, from the forward end, and engage the inner shaft rear into the small bore pilot on the torquemeter aft mount (3), until it bottoms.

h. Install torquemeter forward mount (7) on pilot shaft of torquemeter shaft adapter (8) and install large washer and nut. Align the mounting bases of the forward and aft mounts and secure the torquemeter forward mount (7) to the housing with four bolts, washers, and locknuts. Torque nuts to 80–95 lb in. (QA). Torque large nut to 240–300 lb in. (QA)

i. Reinstall anti–icing cowl duct and cover on torquemeter housing. Attach anti–icing dome cowl to brackets with cam–loc fasteners.

j. Reinstall torquemeter pickup (with shims) on torquemeter housing and install cap on electrical connector.

31. TORQUEMETER INSTALLATION INTO SHIPPING CONTAINER (P/N 6854340.)

Support Equipment Required

Part No./Type Designation	Nomenclature
–––	Wrench, torque (0–300 lb in.)

Materials Required

Specification No./Part No.	Nomenclature
MIL–B–121, Grade A, Type II	Barrier material, grease–proofed, waterproofed, flexible
MIL-PRF-23699	Lubricating oil
MS20995C32	Lockwire, 0.032 inch
PPP–B–636	Fiberboard carton
PPP–T–60	Tape, adhesive, pressure sensitive

a. Lower the torquemeter assembly, with forward and aft mounts attached, into the container base (4, figure 8) and secure with four bolts (heads down), washers, and locknuts. Torque nuts to 180–200 lb in. (QA)

b. Place gaskets and seals in a bag or envelope and secure to desiccant basket with lockwire.

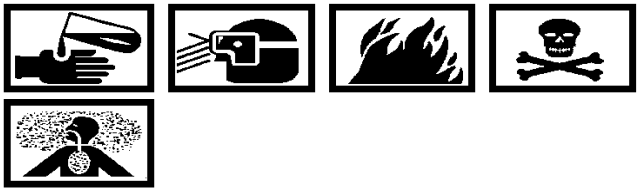

Lubricating Oil, MIL–PRF–23699 2

c. Apply a light coat of MIL–PRF–23699 engine lubricating oil to the safety coupling and wrap in MIL–B–121, Grade A, Type II barrier material. Secure paper with PPP–T–60 pressure sensitive adhesive tape. (QA)

d. Assemble the mid bearing lock tube to the mid bearing outer ring and secure with internal retaining ring. Apply a light coat of MIL–PRF–23699 engine lubricating oil to the mid bearing assembly and insert shipping plug (3, figure 7) in the bearing to secure rollers. Wrap bearing assembly, lock key, and retaining ring in MIL–B–121, Grade A, Type II barrier material.

e. Pack the safety coupling and mid bearing assembly in PPP–F–636 fiberboard carton and seal with PPP–T–60 pressure sensitive adhesive tape. Secure carton to desiccant basket (11, figure 8) with lockwire. (QA)

32. FINAL CONTAINER PREPARATION (P/N 6854340)

Support Equipment Required

Part No./Type Designation	Nomenclature
–––	Wrench, torque (0–600 lb in.)

Materials Required

Specification No./Part No.	Nomenclature
A–A–59503, Type 1, Grade A or B, Class 1	Nitrogen, dry
MIL–C–16173, Grade 1	Corrosion preventive compound, hard film
MIL–D–3464, Class 1	Desiccant, 16–unit bag (1)
MS20995C32	Lockwire, 0.032 inch

a. Remove records receptacle cover (14, figure 9) and gasket (13). Place a copy of installation instructions (if available) and torquemeter records in a plastic engine records envelope and place into records receptacle (12). Reinstall cover and gasket. Torque nuts 60–80 lb in. Lockwire. (QA)

b. Place a 16–unit bag of MIL–D–3464, Class 1 desiccant into the desiccant basket (11). (QA)

NOTE

Be sure the closure gasket (2) is properly seated on the flange.

c. Lower the cover (1) onto the base (4) and align the closure bolt holes.

d. Secure the cover to the base with bolts, lockwashers, and nuts. Install bolts with heads down. Torque nuts to 216–336 lb in. (QA)

Corrosion Preventative Compound MIL–C–16173 Grade 1 (Hard Film) 21

e. Coat the cover bolt threads with MIL–C–16173, Grade 1 corrosion preventive compound.

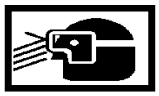

Dry Nitrogen A–A–59503 Type I Grade A or B Class 1 **23**

f. Pressurize the container to 3 ± 0.5 psig (at approximately 70°F) with A–A–59503, Type I, Grade A or B, Class 1, dry nitrogen.

g. Reinstall the air valve cap.

h. Check the container closure gasket, humidity indicator, air valve, and relief valve gaskets for pressure leaks, using a soap and water solution. (QA)

33. **COMPRESSOR ROTOR INSTALLATION AND REMOVAL FROM CONTAINER.**

34. COMPRESSOR ROTOR INSTALLATION INTO CONTAINER.

a. Install 3435 compressor rotor sling (figure 9). Loop sling cables around rotor and lift compressor rotor assembly from 6796833 transportation and storage stand (figure 10).

b. Lower compressor rotor into container and remove rotor sling.

c. Secure compressor rotor in container.

d. Install container cover and secure (figure 11).

35. COMPRESSOR ROTOR REMOVAL FROM CONTAINER.

a. Remove container cover to expose compressor rotor (figure 11).

b. Remove nuts at front and aft container rotor supports and remove collars.

CAUTION

Newly ground blade tips may be sharp. Wear gloves when handling rotor to prevent injury.

NOTE

Use one hand to steady rotor or use a second person to assist when lifting rotor.

c. Install 3435 compressor rotor sling (figure 9). Loop sling cables around rotor and lift compressor rotor assembly from container. If lifting rotor vertically, lift compressor rotor enough and install 6796540 compressor rotor lifting adapter (figure 12) on front compressor rotor shaft. Reposition rotor on container supports.

NOTE

Rotor may be positioned vertically or horizontally in 6796833 transportation and storage stand.

d. Use 3435 compressor rotor sling if positioning rotor in a horizontal position in 6796833 transportation and storage stand. Remove 3435 compressor rotor sling from rotor. Install 6796886 compressor rotor cover (figure 11).

e. Use 6796540 compressor lifting adapter if positioning rotor in a vertical position in 6796833 transportation and storage stand. Remove hoist and compressor lifting adapter from rotor.

36. **MAINTENANCE IN PRESERVATION. (PRE–SERVED ENGINE ASSEMBLY OR MODULE IN SHIPPING CONTAINER).**

NOTE

Engines can be received as an engine assembly (consisting of 3 modules, 3 in 1) or as an engine module such as a; reduction gear assembly, torquemeter assembly or power section assembly.

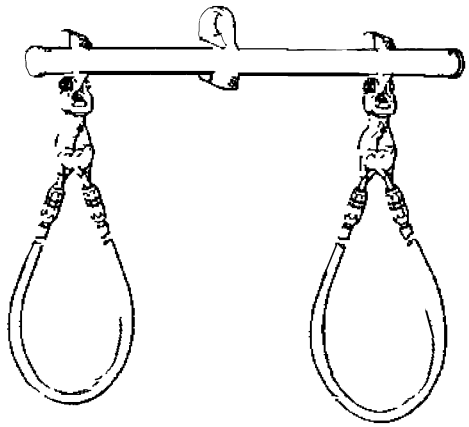

Figure 9. 3435 Compressor Rotor Sling

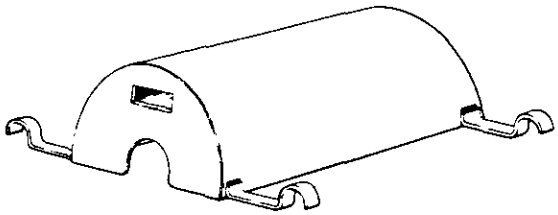

Figure 11. 6796886 Compressor Rotor Cover

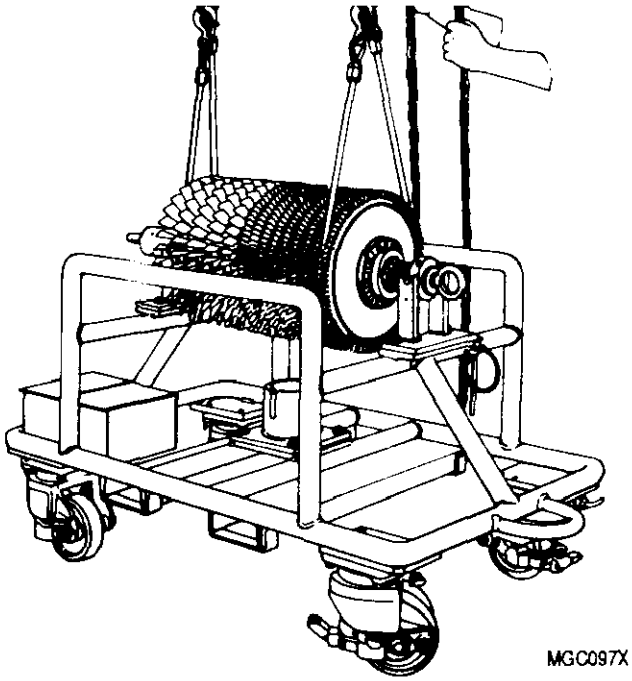

Figure 10. 6796833 Transportation and Storage Stand

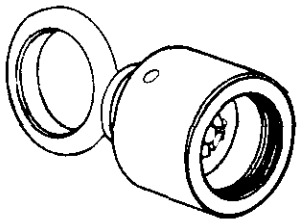

Figure 12. 6796540 Lifting Adapter

37. SHIPPING CONTAINER MAINTENANCE (CONTAINER SEALED).

a. Inspect the internal pressure and the internal relative humidity of the container just before shipment, immediately upon receipt and at least once every 90 days. (QA)

b. Maintenance of sealed container will be as follows:

(1) If the internal pressure is more than 1 psig and the humidity indicator card shows safe, no further maintenance is required until the next inspection. (QA)

(2) If the internal pressure is less than 1 psi and the humidity indicator card shows safe, repressurize the container to 5 psig; Refer to paragraph 10, this WP. Recheck the pressure after seven days. (QA) If pressure has not been maintained use the engine assembly or module or reinstall it in another container. Reject faulty container.

(3) If the humidity indicator card shows unsafe, and the internal pressure is more than 1 psig replace the desiccant and repressurize the container. Refer to paragraph 10, this WP. (QA)

(4) If the humidity indicator card shows unsafe, and the internal pressure is less than 1 psig the container shall be opened and the engine assembly or module inspected for evidence of corrosion. Refer to paragraph 38, this WP.

38. PRESERVED ENGINE ASSEMBLY OR MODULE MAINTENANCE (SHIPPING CONTAINER OPENED).

a. Open container and inspect engine assembly or module for evidence of corrosion. Refer to paragraph 1, this WP. (QA)

b. Clean corroded areas and repaint as required. Refer to paragraph 2, this WP.

c. If engine is operable and local conditions permit, depreserve engine and perform a ground check run to determine if the engine is serviceable. (QA) Refer to paragraph 40, this WP.

d. After ground check run, represerve engine and reinstall it into container. (QA)

39. RENEWAL OF PRESERVATION (OPERABLE ENGINES).

a. Remove engine from container.

b. Depreserve engine and perform a ground check run. (QA) Refer to paragraph 40, this WP.

c. Represerve engine.

d. Reinstall engine into container.

40. **DEPRESERVATION AND INITIAL RUN.**

Materials Required

Specification No./Part No.	Nomenclature
6843332–04	Packing, preformed (1)
MIL–PRF–23699	Lubricating oil
MS20995C32	Lockwire, 0.032 inch
AS3085–118	Packing, preformed (1)

a. Remove the unit from shipping container. Use the following procedure for depreserving the engine, or applicable parts of the procedure for depreserving the power section or reduction gear separately.

NOTE

Comply with steps (1) and (6) only if the unit has been preserved with oil other than lubricating oil approved for continued engine operation.

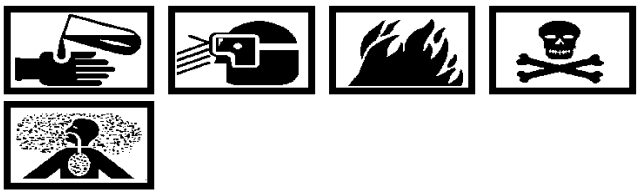

Lubricating Oil, MIL–PRF–23699 2

(1) Remove the plugs in the reduction gear or power section and drain the oil system. After draining for at least five minutes install and lockwire plugs. Remove oil filter, clean and coat with MIL–PRF–23699 lubricating oil. Reinstall filter.

(2) To assure an oil supply to the power section and gearbox pressure pumps prior to first motoring, when oil inlet hoses have been opened for maintenance, or to minimize the possibility of engine component damage due to lack of lubrication, use the following procedure:

Lubricating Oil, MIL–PRF–23699 2

(a) Provide the engine with a supply of MIL–PRF–23699 lubricating oil. Remove plug from the reduction gear oil filter assembly. Retain plug for reinstallation and discard old preformed packing.

(b) Remove plug from the right hand side of the power section accessory drive housing cover adjacent to the power section oil filter. Retain plug for reinstallation and discard old preformed packing.

(c) Wait until oil flows from each area and reinstall plugs with new preformed packings. (QA)

CAUTION

To prevent damage to the propeller brake, the engine must not be motored more than twice without oil pressure indications. If no oil pressure is indicated, make an investigation.

(d) Install the air turbine starter and tachometer generator on the reduction gear assembly.

(e) Motor the engine without ignition and if oil pressure is not indicated on both power section and reduction gear indicators by 20% rpm, shut down and repeat steps (a) through (d).

(3) Motor the engine through the starter drive without ignition and check for an indication of oil pressure. If no oil pressure is indicated after a second attempt, begin troubleshooting. Refer to WP 025 00.

(4) Install the engine in the aircraft or test stand and operate it at FLIGHT IDLE for five minutes. The oil inlet temperature on both the reduction gear and the power section should be 180°F (82°C) maximum.

(5) Clean oil filters if corrosion–preventive oil was the preservation oil.

(6) Enter the name of the activity and date of depreservation in the Log Book.

41. **PRESERVATION OF OPERABLE ENGINES INSTALLED IN QECA.**

CAUTION

Do not spray the compressor gas path with preservatives.

NOTE

Refer to NAVAIR 15–01–500 for engine preservation procedures. The following procedures and information are designed specifically for the T56 engine and must be used in conjunction with NAVAIR procedures.

42. OIL SYSTEM PRESERVATION.

a. Preserve the engine oil system as outlined in RENEWAL EVERY 30 DAYS, this WP. (QA)

b. If the engine is to be stored for more than 30 days, preserve the fuel system as outlined in INACTIVE BEYOND 30 DAYS. (QA)

43. RENEWAL EVERY 30 DAYS.

a. Every 30 days follow this procedure. (QA)

(1) Open the inlet and exhaust ducts, and stand clear of the propeller, if installed.

CAUTION

Make sure an oil supply is actually at both the reduction gear and the power section oil pump inlets before motoring.

(2) Motor the reduction gear through the starter drive, with a turning device, at maximum attainable motoring rpm for one minute. Permit the oil to circulate during motoring. After coastdown, seal all openings.

CAUTION

Do not exceed starter limitations.

(3) Motor the power section, with a turning device, at maximum attainable motoring rpm for one minute. Simultaneous with motoring, permit the oil to circulate through the power section.

(4) During the last part of motoring, shut off the oil supply line to the power section. Continue motoring until the flow of scavenged oil coming from the outlet is at a minimum or for a maximum of one minute.

(5) After coastdown, seal all openings.

44. INACTIVE BEYOND 30 DAYS.

Materials Required

Specification No./Part No.	Nomenclature
MS20995C32	Lockwire, 0.032 inch
MIL–PRF–23699	Lubricating Oil
MIL–PRF–6081, Grade 1010	Lubricating Oil

a. Preserve the engine fuel system as follows:

CAUTION

Do not hot preserve the engine fuel system.

Lubricating Oil, MIL–PRF–6081, (Grade 1010) 7

(1) Disconnect the engine fuel inlet line; provide a supply of MIL–PRF–6081, Grade 1010, lubricating oil through a 10–micron filter to the engine.

(2) Disconnect the fuel line at the flowmeter inlet. Install drain hose and provide a container for draining.

NOTE

Make sure the manual fuel cutoff is open.

(3) Open the fuel control cutoff valve by grounding pin C and applying 28 V DC to Pin B of the electrical connector.

(4) Remove the main fuel control body access plug. After draining, replace the plug and lockwire. (See figure 13.)

CAUTION

Do not exceed starter limitations.

NOTE

Leave fuel system full of preserving oil. Do not drain.

(5) Motor the engine up to maximum attainable motoring rpm. Simultaneous with motoring, open the oil supply line to the fuel system. Cycle the starting fuel system.

(6) When fuel–free oil flows from the drain line flushing is complete.

(7) Disconnect the preserving oil supply. (See figure 13.)

(8) Remove drain lines and reconnect the fuel lines.

(9) Close the fuel control cutoff valve by grounding pin C and applying 28 V DC to pin A of the electrical connector.

Lubricating Oil, MIL–PRF–6081, (Grade 1010) 7

(10) Attach a tag to the engine fuel inlet stating that the fuel system has been preserved with MIL–PRF–6081, Grade 1010, lubricating oil.

(11) If engine is to be sent to overhaul, remove the engine oil drain plugs and allow oil to drain. Otherwise, draining is not necessary.

Lubricating Oil, MIL–PRF–23699 2

(12) Spray all drives, from which accessories were removed, with MIL–PRF–23699 lubricating oil.

45. **PRESERVATION OF INOPERABLE ENGINES INSTALLED IN QECA.**

46. PRESERVATION WHEN ROTOR SHAFT CAN BE ROTATED.

Support Equipment Required

Part No./Type Designation	Nomenclature
---	Gage, 30 psig

Materials Required

Specification No./Part No.	Nomenclature
MIL–PRF–23699	Lubricating oil
MS20995C32	Lockwire, 0.032 inch
MIL–D–3464, Class 1	Desiccant, 16–unit bag (14)

CAUTION

Do not spray the compressor gas path with preservatives.

NOTE

Refer to NAVAIR 15–01–500 for engine preservation procedures. The following procedures and information are designed specifically for the T56 engine and must be used in conjunction with NAVAIR procedures.

This preservation is applicable to engines which are destined for overhaul or repair. It may also be used on operable engines destined for overhaul or repair when existing local conditions do not permit the preservation run.

Lubricating Oil, MIL–PRF–23699 2

a. Connect an auxiliary supply of MIL–PRF–23699 lubricating oil to the engine.

b. Install a 30 psig gage to the oil pressure connection on the power section. This gage should show positive pressure when the rotor is operated as follows:

c. Introduce the oil into the oil inlet.

d. Motor the engine through the starter drive without ignition up to maximum attainable motoring rpm. Motor one minute. Motor as necessary to preserve the fuel system. Refer to renewal every 30 days, this WP.

CAUTION

Do not exceed starter limits.

e. Disconnect the oil supply line, remove drain plugs, and allow the excess oil to drain.

f. Close all engine openings and replace and lockwire plugs. (QA)

g. Install the engine, with the required amount of MIL–D–3464, Class 1 desiccant, in a shipping container for transfer to the overhaul or repair activity. Refer to paragraph 10 this WP.

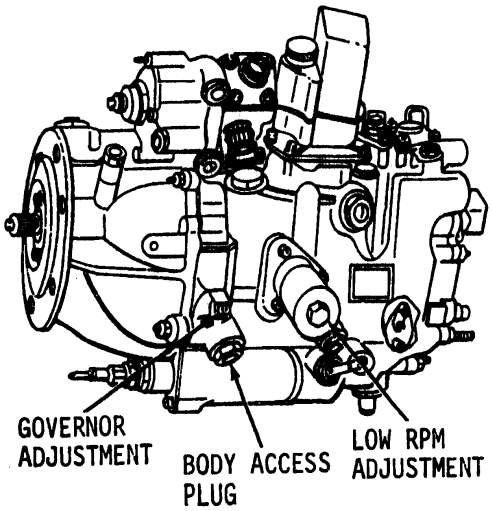

Figure 13. Fuel Control–Bottom Left Side View

47. PRESERVATION WHEN ROTOR SHAFT CANNOT BE ROTATED. (See figure 13.)

Support Equipment Required

Part No./Type Designation	Nomenclature
–––	Flowmeter, 800–1000 PPH
–––	Gage, 150 psig

Materials Required

Specification No./Part No.	Nomenclature
AS3085–118	Packing, preformed
MIL–D–3464, Class 1	Desiccant (14)
MIL–PRF–23699	Lubricating Oil
MIL–PRF–6081, Grade 1010	Lubricating Oil
MS20995C32	Lockwire, 0.032 inch
6784419–4	Seal, metal O–ring

NOTE

This procedure applies to engines destined for overhaul or repair. It also may be used on operable engines destined for overhaul or repair, when local conditions do not permit the preservation run.

a. Remove the turbine rear oil pump support, ring seal, and associated parts so that an atomized oil spray can be applied directly to the turbine rear bearing, tie bolt, and scavenge pump assembly.

b. Remove the cap from the breather overboard fitting.

c. Remove the covers from oil inlet and oil outlet pads on the main pressure and scavenge oil pump.

d. Remove the drain plug and ring seal from the bottom of the accessory housing and drain the oil.

e. Remove the two–bolt drain cover and ring seal from the bottom of the diffuser and drain the oil.

f. Obtain a high–pressure line approximately three feet long. This line should be one through which both oil and high pressure air may be applied alternately. Attach this line at the diffuser drain flange.

Lubricating Oil, MIL–PRF–23699 2

g. Raise the free end of the high–pressure line to the level of the engine center–line, or higher, and pour 3 1/2 pints of MIL–PRF–23699 lubricating oil into the diffuser through this line.

h. Apply 70 to 100 psig dry air to the diffuser through a No. 4 fitting on the end of the special line for seven minutes.

i. Reinstall the two–bolt drain cover and new 6784419–4 O–ring seal at the bottom of the diffuser. (Draining the diffuser before replacing the cover is optional.)

j. Install a suitable hose with a shutoff valve to accessory housing bottom drain plug opening. Close valve.

k. Pour three pints of MIL–PRF–23699 lubricating oil into the accessory housing through the breather overboard fitting.

l. Open shut–off valve and apply 70 to 100 psig air pressure to the accessory housing.

m. Remove hose and valve.

n. Reinstall the drain plug and new AS3085–118 preformed packing at the bottom of the accessory housing. (Draining the accessory housing before replacing the plug is optional.)

Lubricating Oil, MIL–PRF–23699 2

o. Carefully spray only the turbine rear bearing, turbine rear bearing support, turbine tie bolt, turbine rear pump support, and turbine rear scavenge pump with an atomized spray of MIL–PRF–23699 lubricating oil. All parts shall be coated with oil before reassembly.

p. Reinstall the turbine rear oil pump support, new ring seal, and associated parts.

Lubricating Oil, MIL–PRF–23699 2

q. Apply a small amount of atomized MIL–PRF–23699 lubricating oil to the scavenge and pressure openings in the main oil pump and replace the covers.

r. Replace the breather overboard fitting cap.

s. Open the fuel control cutoff valve by grounding pin C and applying 28 V DC to pin B of the electrical connector.

NOTE

Make sure manual shutoff valve is in the open position.

t. Remove the main fuel control body access port plug. Allow the fuel control to drain for at least five minutes then reinstall the plug and lockwire. (See figure 13.) (QA)

u. At the flowmeter, disconnect the temperature datum valve to flowmeter hose and allow the fuel to drain from the temperature datum valve into a container.

v. At the fuel filter, disconnect the bypass hose to allow the fuel to drain into a large container.

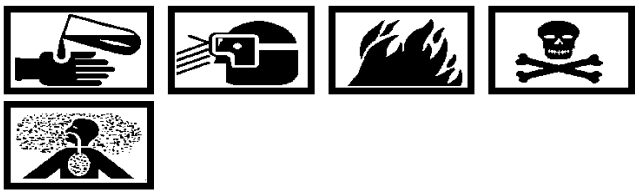

Lubricating Oil, MIL–PRF–6081, (Grade 1010) 7

w. To the inlet port of the fuel control, connect a supply of MIL–PRF–6081, Grade 1010, lubricating oil with a 10 micron filter installed in the line.

CAUTION

In order to open the pressurizing valves of the fuel control and the datum valve, it may be necessary to increase the pressure slightly above 125 psig but the pressure should never exceed 150 psig.

NOTE

Leave fuel system full of preserving oil. Do not drain.

x. At a pressure of approximately 125 psig, flow filtered oil into the fuel control unit at 800 to 1000 lb per hr until fuel–free oil flows from the flowmeter hose and from the bypass hose.

CAUTION

Do not use fuel contaminated oil for preservation of controls.

y. Close the fuel control cutoff valve by grounding pin C and applying 28 V DC to pin A of the electrical connector.

NOTE

Leave fuel system full of preserving oil. Do not drain.

Lubricating Oil, MIL–PRF–6081, (Grade 1010) 7

z. Attach a tag to the engine fuel inlet stating that the system has been preserved with MIL–PRF–6081, Grade 1010, lubricating oil.

aa. Remove all special fittings, reconnect all hoses and attach a warning tag to all fuel system connections broken during preservation. Warning tags shall state “This connection disturbed during preservation. Inspect for leaks at system integrity check.”

ab. Close all engine openings.

ac. Install the engine in a container with the fourteen 16–unit bags of MIL–D–3464, Class 1 desiccant and ship to an overhaul or repair activity.

48. MAINTENANCE IN PRESERVATION. Expedite transfer of inoperable engines to a maintenance activity. Maintain preservation in accordance with extended storage requirements insofar as local conditions permit.

49. RENEWAL OF PRESERVATION. On inoperable engines, no renewal is permitted.

50. DEPRESERVATION. Maintenance activities only will depreserve inoperable engines.

51. **PRE–INDUCTION INSPECTION.**

a. Before beginning disassembly, generally inspect the entire engine for obvious damage to determine whether a repair must be accomplished at a depot facility. If a repair can be accomplished at a complete repair level (1st degree), record or tag areas or components that are damaged, and repair or replace as applicable during disassembly.

b. See table 5 for areas to be inspected and corresponding WP numbers.

Table 5. Pre–Induction Inspection

Task	WP Number
Compressor Inspection	045 00
Bleed Air Valves	089 00
Anti–ice Shutoff Valve	091 00
Ignition Exciter and Leads	082 00, 086 00
Accessory Drive Housing Assembly	043 00
Fuel Control	064 00
Fuel Pump, Dual Element	058 00
Wiring	081 00
Magnetic Plug	072 00
Pressure Oil Jets	030 00
Low Pressure Fuel Filters	061 00
High Pressure Fuel Filter	059 00
Power Section Oil Filter	077 00
Compressor Bleed Air Filters	090 00
Thermocouple Harness	087 00

INTERMEDIATE MAINTENANCE

PRE–INDUCTION INSPECTION

Reference Material

Aircraft Weapons Systems Cleaning and Corrosion Control	NAVAIR 01–1A–509
Illustrated Parts Breakdown, T56–A–427 Turboprop Engine	NAVAIR 02B–5DG–4
Preservation of Naval Aircraft	NAVAIR 15–01–500
High Pressure Fuel Filter	WP 059 00
Low Pressure Fuel Filters and Elements	WP 061 00
Power Section Oil filter	WP 077 00
Compressor Bleed Air Filter	WP 090 00
Thermocouple Harness	WP 087 00

Alphabetical Index

Subject	Page No.
General Engine Inspection	2
Inspection of Magnetic Plug	2
Pre–Induction Inspection	2
Inspection of Compressor Bleed Air Filter	4
Inspection of High Pressure Fuel Filter	4
Inspection of Low Pressure Fuel Filter	4
Inspection of Power Section Oil Filter	4
Pre–Induction Quality Assurance Inspection	4
Pressure Oil Jet Test	3
Testing of Thermocouple Harness	4

Record of Applicable Technical Directives

None

1. **PRE–INDUCTION INSPECTION**.

2. **GENERAL ENGINE INSPECTION**.

NOTE

Generally inspect the entire engine for obvious damage to determine whether repair must be accomplished at an overhaul facility, before beginning disassembly. If repair can be accomplished at the intermediate repair level, record or tag areas or components that are damaged, and repair or replace as applicable during disassembly.

a. Inspect areas indicated for damage as follows:

(1) Evidence of foreign object damage, corrosion, cracks, or salt deposits to air inlet guide vanes and compressor blades.

(2) Fuel control air sensing tip for cleanliness and obstructions.

(3) Combustion case for buckles, cracks, evidence of overheat, and security.

(4) Rear turbine case for cracks and distortion.

(5) Rear turbine bearing support strut for cracks and distortion.

(6) Ignition harness and igniter plugs for cleanliness, evidence of burning, breaks, fraying, chafing, insulation deterioration and looseness.

(7) Fuel system components, lines, hoses, and connections for evidence of leaks, corrosion, deterioration, chafing and security.

(8) Oil system components, lines, and connections for evidence of leaks, corrosion, chafing, oil saturation, and security.

(9) Bleed air manifold and duct for cracks, evidence of leaks, alignment, and security.

(10) Electrical wiring for chafing, evidence of overheating, and connection for security.

(11) Accessory drive and components for evidence of leakage, cracks, damage, corrosion, and loose studs.

(12) Accessory drives for spline wear, corrosion, and security.

3. INSPECTION OF MAGNETIC PLUG.

Support Equipment Required

Part No./Type Designation	Nomenclature
–––	Torque Wrench (0–500 lb in.)
AN/USM–311	Multimeter

Materials Required

Specification No./Part No.	Nomenclature
MIL-PRF-680, Type II	Solvent, Cleaning
6843333–118	Packing
MS20995C32	Lockwire

a. Disconnect electrical lead.

b. Remove magnetic plug from outlet fitting of pressure and scavenge oil pump and discard packing.

c. Inspect plug for metal particles as follows:

(1) Fuzz–like magnetic particles, non–magnetic sludge, small silver or non–magnetic flakes, bronze powder, or machining chips of magnesium or aluminum – acceptable.

(2) Hair–like magnetic particles – acceptable.

(3) Flakes of magnetic material having a diameter of 1/16 inch or more – not acceptable.

(4) Chunks of metallic material – not acceptable.

d. Inspect plug for crossed or burred threads – none allowed.

NOTE

When performing the magnetic plug resistance check, caution shall be exercised to avoid shorting the ohmmeter (machinator) test lead alligator clips against each other. Do not touch the bare portion of the alligator clips when taking the resistance reading because the human body can indicate a resistance value below 20,000 ohms.

e. Using ohmmeter of (multimeter) P/N AN/PSM–4 or Simpson 260, measure resistance across magnetic plug poles – minimum of 20,000 ohms resistance allowed.

f. Inspect plug potting compound – unlimited number of cracks allowed, provided no epoxy chunks are missing at any crack intersection.

Dry Cleaning Solvent
MIL–PRF–680, Type II **3**

g. Clean magnetic plug with solvent MIL–PRF–680, Type II, or approved equivalent.

h. Install new packing P/N 6843333–118 on magnetic plug, and install plug.

i. Torque plug to 240–300 lb. in., and lockwire with MS20995C32.

j. Install electrical lead, and lockwire with MS20995C32.

4. Pressure Oil Jet Tests.

Support Equipment Required

Part No./Type Designation	Nomenclature
–––	Torque Wrench (0–500 lb in.)
–––	Torque Wrench (0–150 lb in.)
6798012–205	Connector, pressure oil tube
6798012–17	Filter
6798012–210	Regulator
6796673	Scavenge oil tube alignment check fixture
6798012–202	Shutoff valve assembly
6798012–203	Hose assembly
6798012–7	Flange adapter

Materials Required

Specification No./Part No.	Nomenclature
6784418–056	Packing (Gasket)
MS20995C32	Lockwire

a. Check compressor rear and turbine front bearing oil jets simultaneously as follows:

NOTE

A source of air pressure of not less than 60 psig is required to accomplish this test.

(1) Disconnect pressure oil tube assembly (1, figure 1) at compressor–diffuser splitline.

(2) Attach connector (1, figure 2) P/N 6798012–205 to pressure oil tube assembly.

(3) Connect air source to filter (2) P/N 6798012–17 of regulator assembly (3) P/N 6798012–201.

(4) Connect regulator assembly (3) to scavenge oil tube alignment check fixture (4) P/N 6796673.

(5) Connect shutoff valve assembly (5) P/N 6798012–202 to scavenge oil tube alignment check fixture (4).

(6) Connect hose assembly (6) P/N 6798012–203 to valve assembly (5) and connector (1).

(7) Close valve assembly (5), and adjust air pressure to 60 psig using regulator assembly (3).

(8) Open valve assembly (5) to admit air pressure into pressure oil tube assembly (1, figure 1).

(9) Record air pressure noted on gage.

NOTE

The pressure gage should not indicate in excess of 12 psig. If the pressure exceeds 12 psig, one or both of the oil jets are obstructed.

(10) Close valve assembly (5, figure 2) and release air pressure in hose assembly (6).

(11) Remove hose assembly (6) from connector (1).

(12) Remove connector (1) from pressure oil tube assembly (1, figure 1).

(13) Reconnect pressure oil tube assembly (1) at compressor–diffuser splitline, and torque to 325 – 400 lb. in.

b. Check turbine rear bearing oil jet as follows:

(1) Disconnect aft end of pressure oil tube assembly (2) at turbine rear bearing support.

(2) Install flanged adapter (7, figure 2) P/N 6798012–7 on flange of turbine rear bearing support (3, figure 1).

(3) Connect hose assembly (6, figure 2) to flange adapter (7).

(4) Open valve assembly (5) to admit air pressure into turbine rear bearing support (3, figure 1).

(5) Record air pressure noted on gage.

NOTE

The pressure gage should not indicate in excess of 26 psi. If the pressure exceeds 26 psi, the turbine rear bearing oil jets are obstructed.

(6) Close valve assembly (5, figure 2) and release air pressure in hose assembly (6).

(7) Remove flanged adapter (7) from flange of rear bearing support (3, figure 1).

(8) Remove used seal P/N 6784418–056 from pressure oil tube assembly (2) and install new seal P/N 6784418–056.

(9) Reinstall bolts, torque to 70 – 85 lb. in., and lockwire with MS20995C32.

5. Inspection of Low Pressure Fuel Filters.

a. Refer to WP 061 00.

6. Inspection of High Pressure Fuel Filter.

a. Refer to WP 059 00.

7. Inspection of Power Section Oil Filter.

a. Refer to WP 077 00.

8. Inspection of Compressor Bleed Air Filter.

a. Refer to WP 090 00.

9. Testing of Thermocouple Harness.

a. Refer to WP 087 00.

10. Pre–Induction Quality Assurance Inspection.

a. Inspect as necessary for proper accomplishment of the following procedures:

(1) Installation and lockwiring of magnetic drain plug.

(2) High pressure fuel filter installation and lockwiring.

(3) Power section oil filter installation and lockwiring.

(4) Compressor air bleed filter installation and lockwiring.

(5) Compressor air inlet thermostat line at fuel control installation.

(6) Installation and lockwiring of low pressure fuel filters.

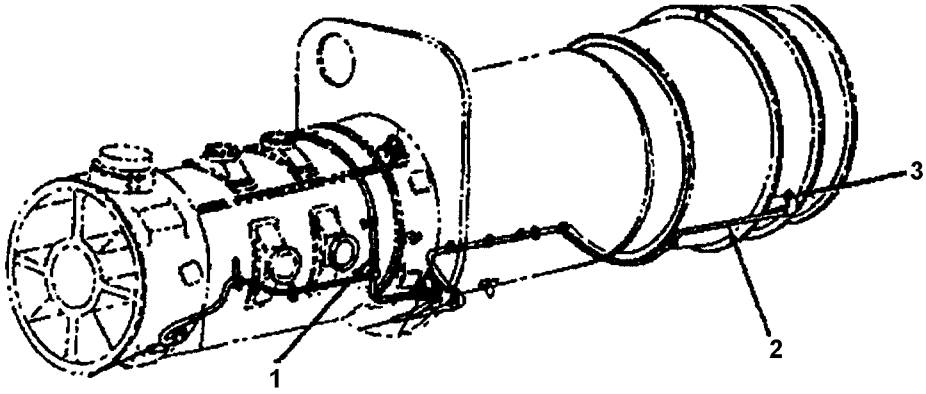

1. Pressure Oil Tube Assembly
2. Pressure Oil Tube Assembly
3. Turbine Rear Bearing Support

Figure 1. Oil Jet Restriction Checking Kit Connector Locations

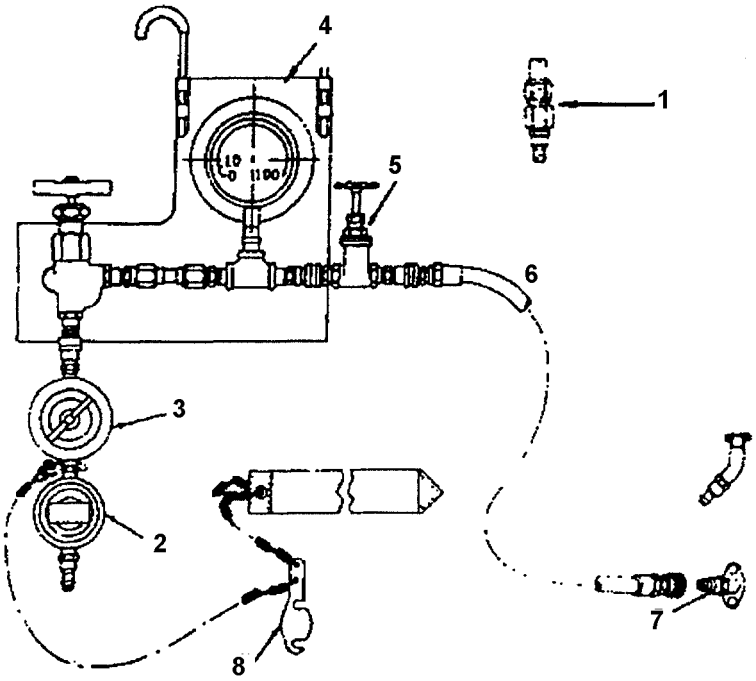

1. Connector (-205)
2. Filter (-17)
3. Regulator Assembly (-201)
4. Scavenge Oi Tube Alignment Check Fixture (P/N 6796673)
5. Shutoff Valve Assembly (-202)
6. Hose Assembly (-203)
7. Flanged Adapter (-7)
8. Blanking Plate (-9)

Figure 2. Oil Jet Restriction Checking Kit Fixture P/N 6798012

INTERMEDIATE MAINTENANCE

MAINTENANCE

INSTALLATION OF ENGINE ASSEMBLY ONTO A MAINTENANCE TRAILER OR STAND

Reference Material

Reduction Gear Removal and Installation . . . . . WP 027 00
Intermediate Maintenance w/ IPB, E–2B/C and C–2A QEC Manual A1–E2C2A–QEC–000
Intermediate Maintenance w/ IPB, E–2B/C and C–2A QEC Manual A1–E2C2A–QEC–010

Alphabetical Index

Subject Page No.
Engine Installation in Overhaul Stand 5
Engine (with QEC) Installation on ALC 4000A Trailer 2
Engine Maintenance on Parallel Rail Work Stand 4

Record of Applicable Technical Directives

None

1. **ENGINE (WITH QEC) INSTALLATION ON ALC 4000A TRAILER**

Support Equipment Required

Part No./Type Designation	Nomenclature
NET–4/3000B	Trailer, transportation
3110 or 1480AS500	Work stand, parallel rail
4000A	Trailer, ALC (Air Logistics Corporation)
6795870	Tube, connecting, power package to air inlet trunnion adapter (2 req'd)
6795877	Yoke, collapsible support, 6796814 adapter
6796814	Adapter, mounting, air inlet housing adapter to parallel rail stand (2 req'd)
6796816	Tube, connector, 6796814 air inlet hsg adapter–to–6799514 diffuser adapter (2 req'd)
6797587	Adapter, trunnion, air inlet housing bottom pad and filter bracket to 6796814 adapter (2 req'd)
6797684	Adapter, stabilizing, QEC housing (2 req'd)
6797711	Spacer, 6796814 mounting adapter (2 req'd.)
6799449	Adapter, uploading, QEC to 6799758 adapter
6799514	Adapter, mounting, diffuser bracket to parallel rail stand
6799758	Adapter, supporting power package, reduction gear to parallel rail stand
–––	Wrench, torque (0–600 lb in.)

CAUTION

The 4000A Trailer is for engine removal and installation only. The engine is not to be transported on a 4000A trailer.

a. Prepare ALC 4000A trailer (figure 1) as follows:

(1) Install 6799758 supporting adapter on trailer parallel rails with forward side of adapter facing tongue of trailer.

(2) Install 6795870 connecting tubes to 6799758 mounting adapter.

NOTE

The 6797711 spacers are installed between 6796814 mounting adapter roller assemblies and upright posts to provide clearance for Quick Engine Change (QEC) trusses.

(3) Install 6797711 spacers between 6796814 mounting adapter roller assemblies and upright posts.

(4) Install 6796814 air inlet housing mounting adapters on parallel rails aft of 6799758 supporting adapter. Install 6795877 support yoke to 6796814 mounting adapters.

(5) Join 6796814 adapters to 6799758 adapters with 6795870 connecting tubes and secure with quick–release pins.

(6) Install 6796816 connecting tubes to 6799514 diffuser mounting adapter.

b. Secure 6797587 trunnion adapters to left and right bottom mounting pads on engine air inlet housing with eight bolts.

c. Attach pads on end of trailer rails for protection of QEC.

d. Open yokes of 6795877 and 6799758 adapters, and after positioning trailer under engine, secure yokes back together.

e. Secure C–link of 6799758 adapter to reduction gear with two bolts.

CAUTION

If the engine with QEC attached is to be transported from one facility to another, the 6797684 stabilizing adapters are required and shall be installed at this time.

f. Disassemble 6797684 stabilizing adapters. Install detail collars on 6796814 mounting adapters cross shafts with slots toward engine.

g. Attach links of 6796814 mounting adapter to 6797587 trunnion adapters with quick–release pins. Adjust knurled nut (View A, figure 1) until link of 6797587 trunnion adapter is flush with shaft. Torque end bolt 360–480 lb in. (QA).

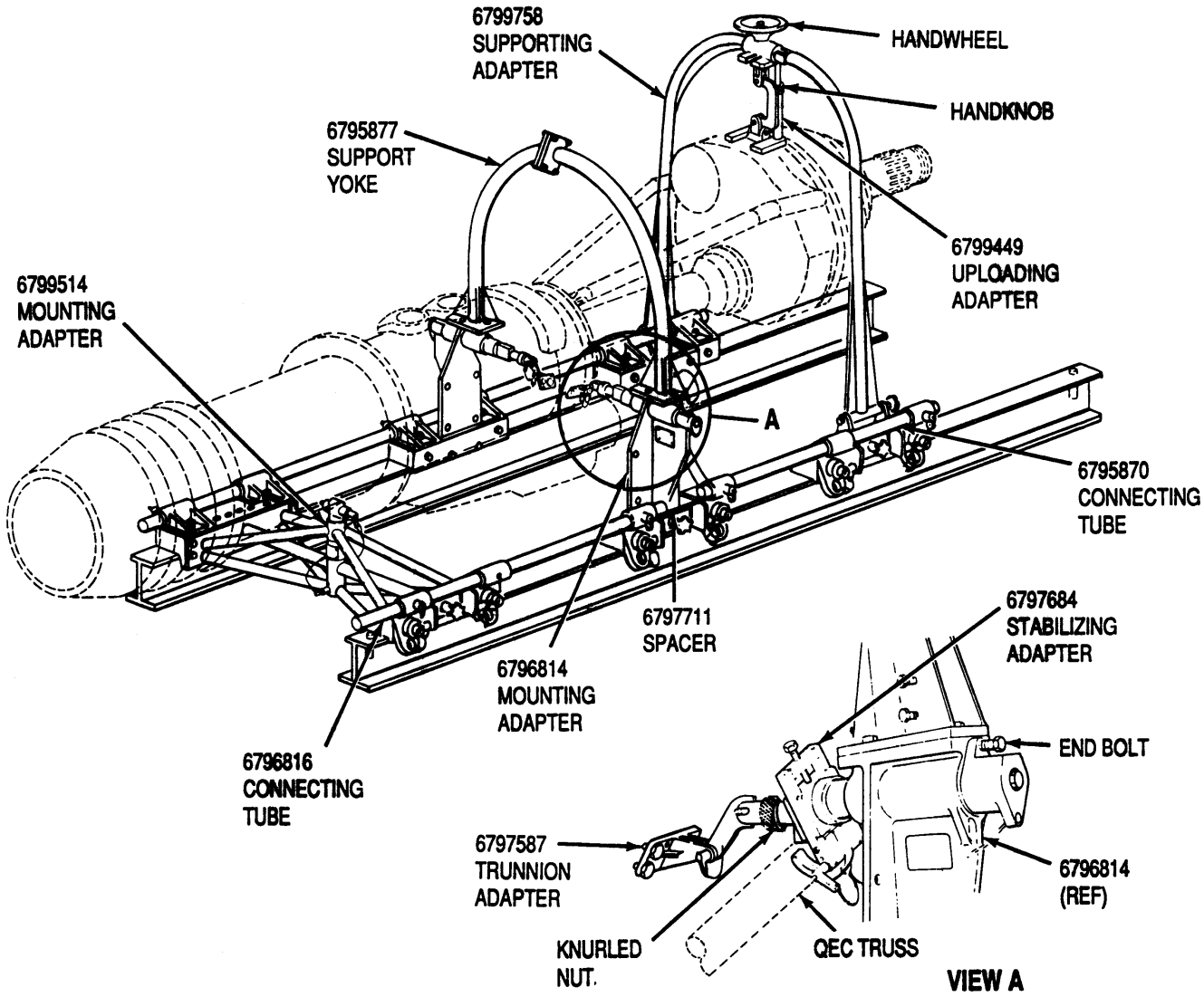

Figure 1. Installation of Engine (with QEC) on ALC 4000A Trailer

h. Support weight of engine and QEC by adjusting hand wheel on top of 6799758 supporting adapter.

CAUTION

Do not overtighten handwheel when making adjustments to aid assembly

i. Install 6799514 diffuser bracket mounting adapter (with 6796816 tubes installed) on parallel rail at rear of trailer under engine. Adjust handwheel if needed to aid assembly.

NOTE

Before inserting quick–release pin through shaft of 6799514 mounting adapter and engine rear mounting bracket, either the ejector air shutoff valve on right side of engine or the anti–icing air shutoff valve on left side of engine, must be removed.

Check engine rear mount bracket to ensure mount inserts are in place.

j. Position 6799514 adapter to align adapter shaft with bolt hole in engine rear mount bracket. Insert quick–release pin through aligned holes.

k. Secure 6796816 connecting tubes between 6799514 mounting adapter and 6796814 mounting adapter with quick–release pins.

l. Tighten knobs on roller assemblies to secure all adapters to parallel rails.

CAUTION

If the engine with QEC attached is to be transported from one facility to another, the 6799449 uploading adapter is required and shall be installed at this time.

m. Install 6799449 uploading adapter base over the bolt heads (securing C–link of 6799758 mounting adapter to reduction gear housing) and above the C–link. Expand adapter full length using hand knob (figure 1). Firmly tighten using 0.250 in. diameter rod in 0.250 in. pinholes in hand knob.

n. Attach arm of 6797684 QEC housing stabilizing adapter under QEC lower truss and secure to adapter with quick–release pins.

o. Tighten bolt on stabilizing adapter to hold truss firmly with adapter arm.

CAUTION

All adapters shall be installed for safe transportation of unit. Do not exceed transport speed.

p. The engine and QEC is now ready to be installed on NET–4/3000B transportation trailer or 3110 or 1480AS–500 parallel rail work stand. With 6797684 stabilizing adapters and 6799449 uploading adapter installed, the unit may be transported at 3–5 MPH.

2. **ENGINE MAINTENANCE ON PARALLEL RAIL WORK STAND.**

Support Equipment Required

Part No./Type Designation	Nomenclature
3110 or 1480AS–500	Work stand, parallel rail
6797692	Adapter, lifting, engine assembly

a. Align trailer rails with rails on 3110 or 1480AS–500 parallel rail work stand and secure together with rail locking pins.

b. Loosen locking knobs on roller assemblies and carefully roll QEC and engine onto parallel rail work stand.

c. Secure to work stand by tightening locking knobs on roller assemblies.

d. Refer to A1–E2C2A–QEC–000 or A1–E2C2A–QEC–010 and remove QEC and attaching parts from engine. Use 6797692 engine lifting adapter (figure 2) as applicable.

3. **ENGINE INSTALLATION IN OVERHAUL STAND.**

Support Equipment Required

Part No./Type Designation	Nomenclature
6795798	Adapter, attaching, diffuser to 6796870 mounting adapter
6796784	Stand, engine overhaul
6796859	Adapter, attaching, power section to 6797692 adapter
6796869	Adapter, trunnion, air inlet housing mounting pad to 6796784 stand
6796870	Adapter, mounting, diffuser mounting bracket to 6796784 stand
6797692	Adapter, lifting engine assembly

a. Refer to A1–E2C2A–QEC–000 or A1–E2C2A–QEC–010 and remove QEC and attaching parts from engine.

b. Install 6797692 lifting adapter (figure 2) to engine assembly with 6796859 attaching adapter (figure 3).

c. Attach hoist to engine lifting adapter and remove engine assembly from air logistics trailer.

d. Install 6796869 trunnion adapter (figure 4) on the air inlet housing mounting pads.

e. Install diffuser mounting tooling for top mounting or lower mounting as follows:

(1) For top mounting. Attach 6796870 (figure 5) to diffuser top bracket.

(2) For lower mounting. Install 6795798 diffuser attaching adapter (figure 6) into diffuser bracket. Attach 6796870 mounting adapter to 6795798 adapter (See figure 7).

f. Remove upper section of front and rear roll rings of 6796784 overhaul stand (figure 8).

g. Install engine assembly in overhaul stand and secure stand adapters. Remove engine lifting adapter from the engine.

h. Install upper sections of the front and rear overhaul stand roll rings.

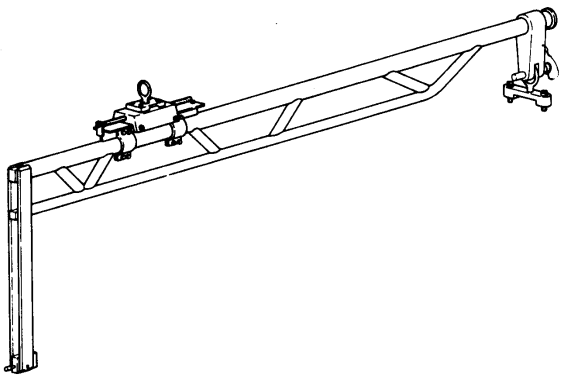

Figure 2. 6797692 Engine Assembly Lifting Adapter

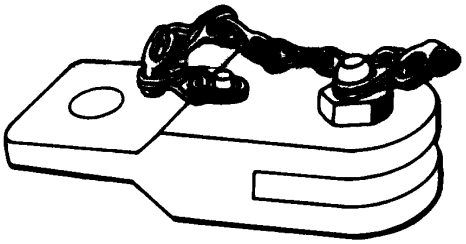

Figure 3. 6796859 Attaching Adapter

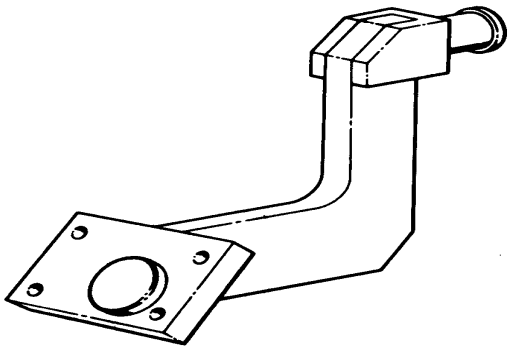

Figure 4. 6796869 Air Inlet Housing Mounting Pad Trunnion Adapter

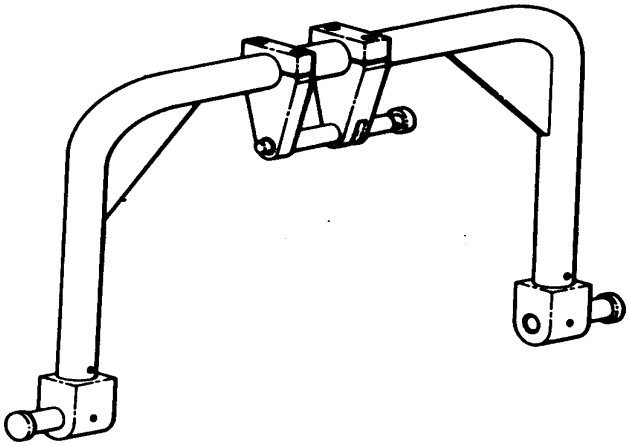

Figure 5. 6796870 Diffuser Mounting Adapter

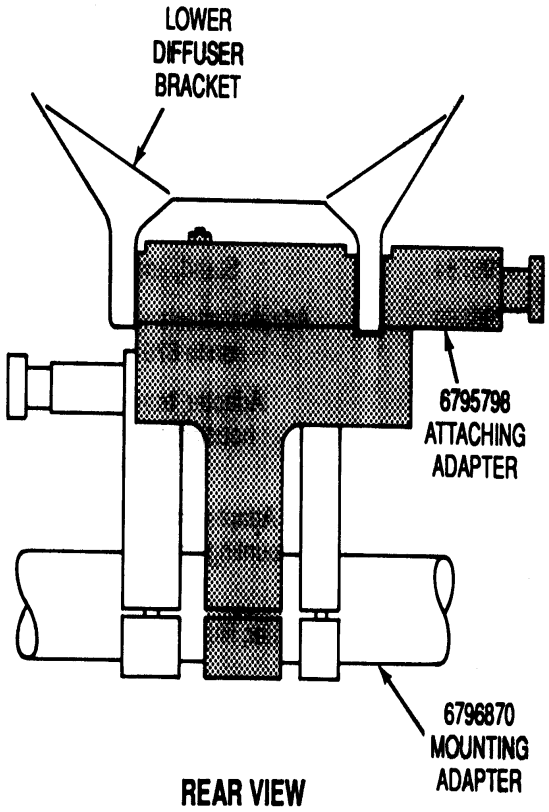

Figure 7. 6795798 Attaching Adapter Installed in Diffuser Bracket and Attached to 6796870 Mounting Adapter

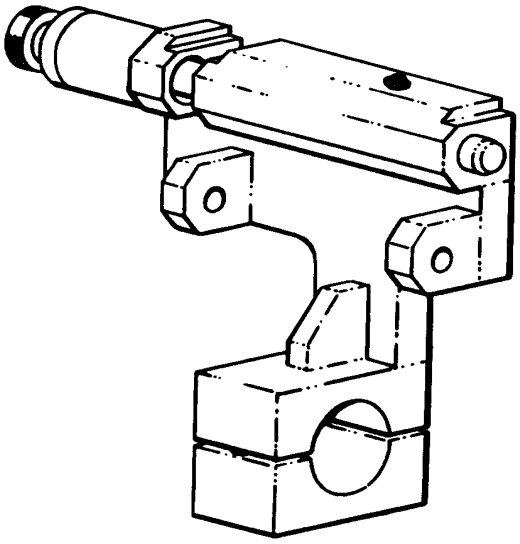

Figure 6. 6795798 Difffuser Attaching Adapter

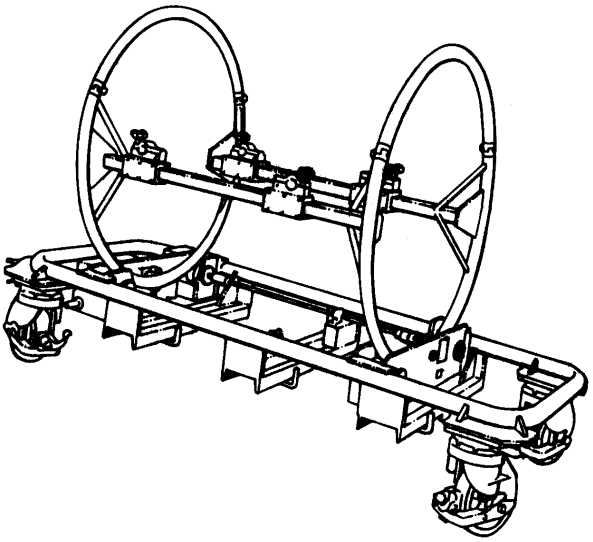

Figure 8. 6796784 Engine Overhaul Stand

INTERMEDIATE MAINTENANCE

PREPARATION

ENGINE TEST

Reference Material

Engine Test – Procedures and Requirements . . . . . WP 023 00

Troubleshooting and Maintenance . . . . . WP 025 00

Quick Engine Change Manual, Intermediate Maintenance with Illustrated Parts Breakdown A1–E2C2A–QEC–010

E–2C, Power Plant System, Organizational Maintenance . . . . . NAVAIR 01–E2AAA–2–10

T56 Turbo Prop Engine Test Systems, Operation and Intermediate Maintenance with Illustrated Parts Breakdown . . . . . NAVAIR 17–15AH–28–1/–2

T56–A–427 Turboprop Engine Monitoring System (EMS) Software User's manual, Organizational and Intermediate Maintenance AE–AGT56–SUM–000

Alphabetical Index

Subject Page No.

Prestart Checks and Adjustments 3

Digital Electronic Trim Control (DETC) To Coordinator PLA Calibration 5

CDP/CDT Transducer Check 6

Duel Element Fire Warning System (DEFWS) Electrical Checkout 6

Engine Analyzer Unit Set Up 3

General 3

Propeller Control Linkage Check 5

Turboprop Engine Test System (TPETS) 2

Engine and Propeller Installation 2

Test Equipment Installation 2

Torquemeter Runout Test Set Hookup 3

Record of Applicable Technical Directives

None

1. **TURBOPROP ENGINE TEST SYSTEM (TPETS).**

2. ENGINE AND PROPELLER INSTALLATION.

Support Equipment Required

Part No./Type Designation	Nomenclature
803AS100–2	System, turboprop engine test

a. Prior to installing engine on turboprop engine test system (TPETS), complete the following static checks:

(1) Thermocouple and harness resistance to ground check. Refer to WP 025 00.

(2) Coordinator static check. Refer to WP 025 00.

b. Refer to NAVAIR 17–15AH–28–1/–2 for engine installation into test system and controls hookup on 803AS100–2 turboprop engine test system.

c. Install Hamilton Standard Model 54460–1 propeller. Refer to NAVAIR 01–E2AAA–2–10 or A1–E2C2A–QEC–010. Use 6797950 propeller shaft thread protector when installing propeller.

d. For QECA's configured with the NP2000 propeller system (QEC No. 26 INC), refer to NAVAIR A1–E2C2A–QEC–000, WP 035 00, for installation and use of adapter set 5SE02235–1.

e. When testing QEC installed engines on the turboprop engine test system, utilize the digital electronic trim control installed in the QEC package.

3. TEST EQUIPMENT INSTALLATION.

Support Equipment Required

Part No./Type Designation	Nomenclature
23007694	Adapter, mounting, reduction gear vibration pickup
23033008	Shroud, turbine case
23051228	Adapter, mounting, compressor horizontal vibration pickup
4–106–0001	Transducer, vertical vibration (use with 6796727)

Support Equipment Required (cont)

Part No./Type Designation	Nomenclature
4–106–0002	Transducer, horizontal vibration (use with 23051228, 23007694)
5SE00655–1	Generator, tach, model B1444
6796727	Adapter, mounting, turbine vertical vibration pickup (use with 6799238)
6797950	Protector, propeller shaft thread
6799238	Isolator, heat, vibration pickup (use with 6796727)

CAUTION

Dropping or striking vibration pickup may cause damage and invalidate calibration. Pickups which have been dropped and/or exhibit external physical damage shall not be used without calibration by a calibration facility.

a. Install the horizontal vibration transducer 4–106–0002 on the 23051228 horizontal vibration pickup mounting adapter. Then install on the compressor housing–to–air inlet housing splitline at the 9 o'clock position as shown in (figure 1).

b. Install 6799238 heat isolator and vertical vibration transducer 4–106–0001 on the 6796727 vertical vibration pickup mounting adapter at the 12 o'clock position on turbine rear bearing support as shown in (figure 2).

c. Install the horizontal vibration transducer 4–106–0002 on the 23007694 reduction gear vibration pickup mounting adapter. Then install on the reduction gear assembly. (See figure 3).

CAUTION

Improper installation of the turbine section shroud may cause damage to the thermocouple leads.

d. Install 23033008 turbine case shroud (figure 4). This shroud mounts on turbine unit to minimize the amount of propeller blast that can get to engine turbine section during engine testing. Make sure shroud is not resting on thermocouple leads.

e. Install 5SE00655 tach generator on forward side of accessory drives gearbox housing. (See figure 5.) Connect cannon plug from TPETS to tach generator.

4. TORQUEMETER RUNOUT TEST SET HOOKUP.

Support Equipment Required

Part No./Type Designation	Nomenclature
23002970	Test set, torquemeter runout
23003266	Test set, torquemeter runout
6893705	Cable, adapter, torquemeter runout

a. Disconnect test stand jumper plug P541 from receptacle on console cabinet No. 9. (Refer to NAVAIR 17–15AH–28–1/–2.) Install test set 23002970 or 23003266 and connect test set to receptacle.

b. Connect torquemeter runout adapter cable 6893705 (figure 6) as follows:

(1) Mate connector marked IND CONN to torquemeter indicator.

(2) Mate connector marked IND CABLE to the test set.

(3) Mate the connector marked TS CONN to the test set.

(4) Attach the adapter cable alligator clip to test cell ground.

(5) Mate the connector marked PH SYNC to the propeller phase synchronizer receptacle in the phase synchronizer rack.

5. **PRESTART CHECKS AND ADJUSTMENTS.**

6. GENERAL. The following operations are to be performed prior to engine start. They can also be used to isolate trouble that may be encountered during test run.

7. ENGINE ANALYZER UNIT SET UP. (Refer to AE–AGT56–SUM–000 for engine analyzer unit setup and test cell procedures.)

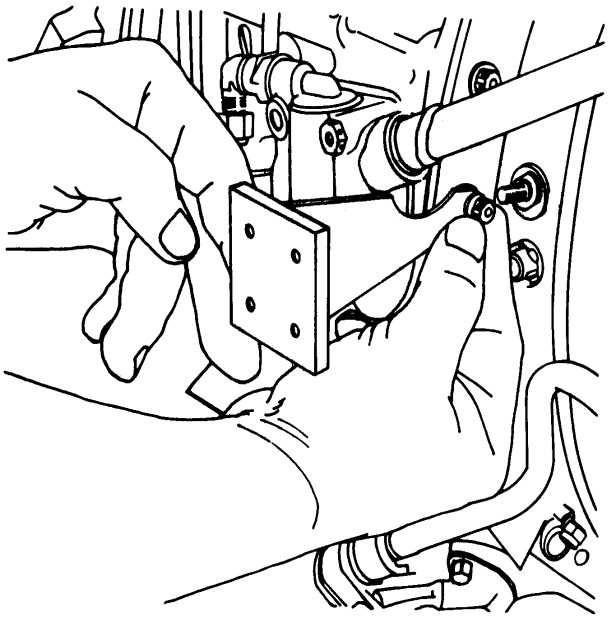

Figure 1. Installing 23051228 Horizontal Vibration Pickup Mounting Adapter (compressor) (Transducer Not Shown)

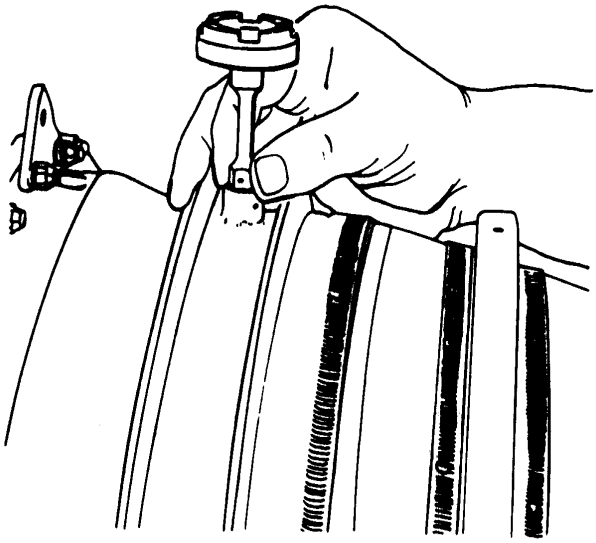

Figure 2. Installing 6796727 Vertical Vibration Pickup Mounting Adapter (Transducer Not Shown)

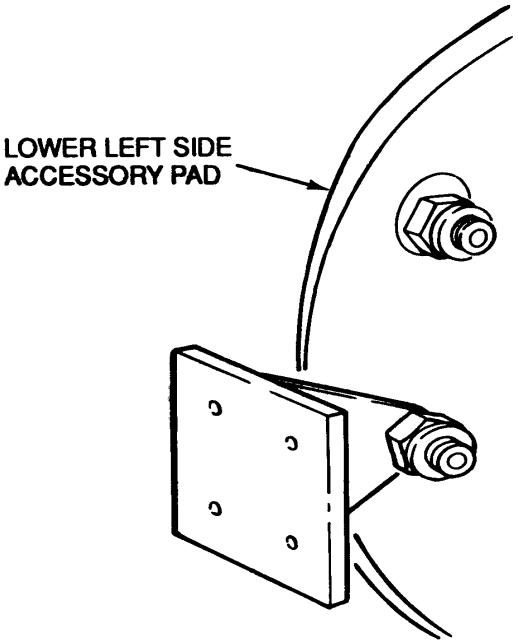

Figure 3. Installing 23007694 Reduction Gear Vibration Pickup Mounting Adapter (Transducer Not Shown)

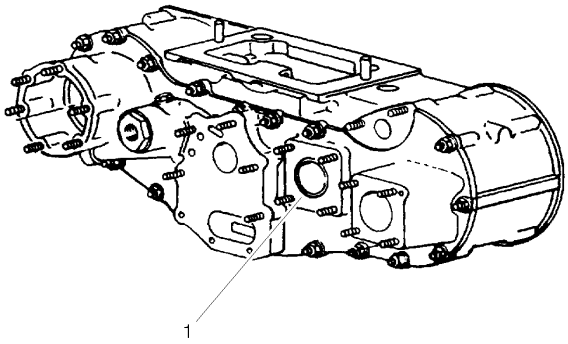

1. Tachometer Generator Pad

Figure 5. Tachometer Generator Pad Location

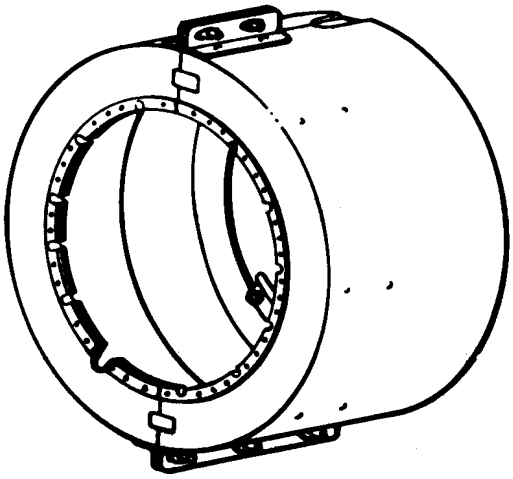

Figure 4. 23033008 Turbine Section Shroud

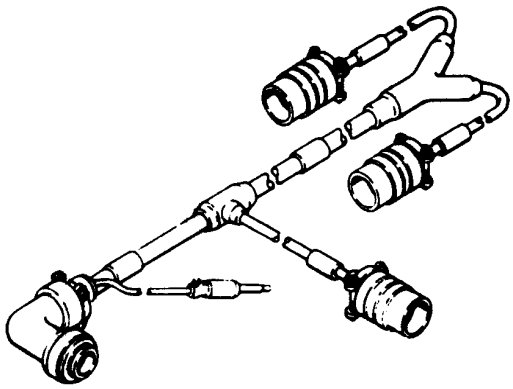

Figure 6. 6893705 Torquemeter Runout Adapter Cable

8. DIGITAL ELECTRONIC TRIM CONTROL (DETC) CALIBRATION TO COORDINATOR PLA CALIBRATION.

Support Equipment Required

Part No./Type Designation	Nomenclature
23032969	Maintenance terminal, hand held (HMT)

NOTE

This step can be performed only after all engine electrical connections have been made.

a. Set EAU/DETC switch to the DETC position.

NOTE

The DETC horsepower must be calibrated each time the torquemeter is changed or the DETC is changed.

The DETC PLA must be calibrated each time the rigging is changed or the DETC is changed. Additionally, due to temperature changes with the seasons, the rigging may loosen or tighten up.

b. Power up sequence:

(1) Switch on 60 Hz.

(2) Switch on 28 V DC. If 427 ENGINE IN OPERATION light does not come ON, troubleshoot TPETS engine select circuitry in accordance with NAVAIR 17–15AH–28–1/–2.

CAUTION

Do not switch on 400 Hz power unless 427 ENGINE IN OPERATION LIGHT is ON. DETC damage will result.

(3) Switch on 400 Hz.

(4) Push EAU circuit breaker IN.

c. Connect the HMT to the DETC.

d. Place the EAU/DETC switch in the DETC position.

e. Ensure that the DETC is receiving 28 V DC power.

f. Place the DETC control switch to either CONTROL or LIMIT.

g. Calibrate the DETC to the coordinator using 23032969 hand held maintenance terminal (HMT) in TPETS control cab.

NOTE

Top half of HMT key pertains to DETC, bottom half of HMT key pertains to EAU.

(1) Press CAL.

(2) Press the PLA button (Display will show POWER LEVER CALIBRATION, PRESS ENTER TO CONTINUE).

(3) Press ENTER (Display will show PUT POWER LEVER AT MAXIMUM, ENTER).

(4) Slowly move the power lever to the maximum position.

(5) Press ENTER (Display will show PUT POWER LEVER AT FLIGHT IDLE, ENTER).

(6) Slowly move the Power Lever to Flight Idle.

(7) Press ENTER (Display will show P.L. DATA WITHIN LIMITS, PRESS ENTER TO CONTINUE).

(8) Press ENTER (Display will show PLA ±___ DEGREES, PRESS CAL LOCK TO SAVE).

(9) Press CAL LOCK (Display will show PLA ±___ DEGREES, CALIBRATION DATA ENTERED).

h. Clear the DETC fault register as follows:

(1) Press READ FAULT. If the HMT shows NO FAULTS FOUND, the register is already clear.

(2) If any faults are recorded, press CLEAR FAULT, YES, and ENTER.

(3) Repeat step (2) until HMT displays NO FAULTS FOUND.

9. PROPELLER CONTROL LINKAGE CHECK.

a. Power–up TPETS per the following sequence:

(1) Switch on 60 Hz.

(2) Switch on 28 V DC. If 427 ENGINE IN OPERATION light does not come ON, troubleshoot TPETS engine select circuitry in accordance with NAVAIR 17–15AH–28–1/–2.

CAUTION

Do not switch on 400 Hz power unless 427 ENGINE IN OPERATION LIGHT is ON. DETC damage will result.

(3) Calibrate DETC per paragraph 8, this work package.

(4) Push EAU circuit breaker in.

b. Check power lever position indicator readings for coordinator power lever positions of 0 degrees, 34 degrees, and 90 degrees.

c. Adjust condition lever linkage, if necessary, to obtain full travel. Refer to NAVAIR 01–E2AAA–2–10.

d. Measure and adjust propeller blade angles in accordance with NAVAIR 01–E2AAA–2–10, WP 125 00 and record. Refer to table 1. The values shown are listed as a guide for initial setting and may be changed, if necessary, to meet limits during subsequent running.

Table 1. Initial Propeller Blade Angle Settings

Feather	80.5° ± 0.5°
Flight Idle (on retarding power lever)	9.5° to 10.5°
Max Power	19° to 23°
Ground Idle	0° ± 2°
Max Reverse	–11° to –12°

CAUTION

Intermittent decrease of the blade pitch in the range from about 63 degrees to 19 degrees may cause the pitchlock to engage or cause damage to the ratchet teeth. If the blades are stopped in this range, first increase the blade angle to above the pitchlock range or to feather, and then resume decrease pitch operation.

NOTE

Propeller blades should move to the feather position when control lever is positioned to FEATHER.

e. With power lever at GROUND IDLE (15 degrees coordinator position), check operation by moving condition lever to FEATHER position. Refer to NAVAIR 01–E2AAA–2–10.

f. Immediately following this check, move condition lever beyond RUN (AIR START).

g. Return blade angle to start position by holding unfeather switch in UNFEATHER position and power lever at 15 degrees coordinator position.

h. Check operation of propeller brake as evidenced by resistance to turning by hand in direction of rotation. If prop brake is locked, refer to WP 025 00.

10. CDP/CDT TRANSDUCER CHECK.

a. Perform CDP/CDT transducer check. Refer to WP 094 00.

11. ELECTRICAL CHECK OUT OF THE DUEL ELEMENT FIRE WARNING SYSTEM (DEFWS), IF INSTALLED.

Support Equipment Required

Part No./Type Designation	Nomenclature
Fluke 77AN or equivalent	Multimeter, digital
Beckman LM22A or equivalent	LCR meter, digital

CAUTION

Improper testing can cause permanent damage to the fire detection sensing elements. Do not use insulation resistance “megger” testers, or dielectric voltage “hypot” testers. Do not use a meter that applies dc voltage, except when measuring the center conductor resistance. Do not check sensing elements heated to within 100° F (55° C) of the alarm point of the sensor. Meter leads can damage the socket end fitting connectors. Use a 0.0625 inch (1.588 mm) to 0.0628 inch (1.595 mm) diameter pin inserted into the receptacle to provide a test point for measurements.

NOTE

At QJ–1 and QJ–5, loop “A” is located above loop “B”.

a. Using digital multimeter, Fluke 77AN or equivalent, measure loop “A” element center conductor resistance at QJ–1 and QJ–5. Ensure resistance is less than 7 Ohms. Repeat resistance check for loop “B”.

(1) If loop resistance is greater than 7 Ohms, individually disconnect and measure the resistance from the center conductor on one end to the center conductor on the opposite end of each sensing element.

(a) If sensing elements (P/N 35560–2–575) have a center conductor resistance greater than one ohm, remove and replace faulty element.

(b) If sensing elements (P/N 35620–2–575) have a center conductor resistance greater than two ohms, remove and replace faulty element.

b. Using Digital LCR Meter Beckman LM22A or equivalent, measure resistance between the center conductor to structural ground on both loops. Ensure resistance is greater than 1 megohm.

(1) If resistance is less than 1 megohm, individually disconnect and measure the resistance from the center conductor to the outer casing of each sensing element.

(2) If the center conductor to outer casing resistance is less than one megohm, remove and replace faulty element.

INTERMEDIATE MAINTENANCE

PROCEDURES AND REQUIREMENTS

ENGINE TEST

Reference Material

Fuel System and Control System - Description and Principles of Operation . . . . . WP 006 00
Preparation for Service and Storage . . . . . WP 019 00
Preparation for Engine Test . . . . . WP 022 00
Troubleshooting and Maintenance . . . . . WP 025 00
Torquemeter Unit and Safety Coupling Assembly - Removal and Installation . . . . . WP 028 00
Reduction Gear Unit Parts - Cleaning, Inspection, Repair, and Replacement . . . . . WP 039 00
Accessory Drive Housing Cover, Gears, Seals, Plugs and Scavenge Pressure Relief Valve - Maintenance . . . . . WP 044 00
Compressor Blades and Vanes - Inspection and Repair . . . . . WP 045 00
Reduction Gear Oil Filter Assembly - Maintenance . . . . . WP 071 00
Reduction Gear Magnetic Plug and Scavenge Oil Screen Assembly - Maintenance . . . . . WP 072 00
Power Section Magnetic Plug - Maintenance . . . . . WP 073 00
Thermocouple Assemblies - Maintenance . . . . . WP 083 00
Aeronautical Equipment Service Record . . . . . NAVAIR Form 13090/20
Miscellaneous History . . . . . NAVAIR Form 13090/6A, Part III
T56 Turboprop Engine Test Systems, Operation and Intermediate Maintenance with Illustrated Parts Breakdown . . . . . NAVAIR 17-15AH-28

Alphabetical Index

Subject Page No.
Engine Shutdown Procedures 8
Compressor Rotor Blade to Compressor Case Rub 20
Emergency Shutdown 8
Normal Shutdown 8
Engine Starting 6
Before Start 6
Engine Start Procedures 7
Engine Visual Inspection for Oil, Fuel and Air Leaks During Initial Engine Operation 8
Engine Testing 27
Auto Feather (Light) Check 42
Compressor and Turbine Seal Break-in 39
Digital Electronic Trim Control (DETC) Check 34
Digital Electronic Trim Control (DETC) Torque Calibration 27
Engine Performance Calculation 30

Alphabetical Index (contd)

Subject Page No.

Final Control Check . . . 41
Fuel Control Governor Check . . . 35
Marconi Horsepower Indicator Calibration Procedure . . . 31
Matching Horsepower Indicator to Engine . . . 34
Mechanical Fuel Shutoff Check . . . 37
Operation Without Propeller . . . 38
Power Section Oil Pressure Adjustment . . . 40
Reduction Gear Assembly (RGA) Run-In Procedure . . . 38
Reduction Gear Oil Pressure Adjustment . . . 40
Reverse Thrust Operational Check . . . 37
Seal Break-in Run . . . 39
Shutdown and Negative Torque System Check . . . 41
Inspection After Test . . . 42
Borescope Inspection of Compressor Blades . . . 53
Borescope Inspection of Turbine First Stage Vanes and Blades . . . 43
Engine Monitoring System (EMS) Tape Analysis . . . 43
Inspection of Turbine First Stage Vanes and Blades using Videoprobe with Defect Measuring System . . . 45
Inspection of Compressor Blades using Flexible Videoprobe with Defect Measuring System . . . 53
Installation, Removal, and Cleaning of Detachable Tips for Flexible Videoprobe with Defect Measuring System . . . 51
Magnetic Plugs . . . 42
Removal, Inspection, Cleaning and Installation . . . 42
Visual Inspection for Oil and Fuel Leaks . . . 42
Reduction Gear Oil Leakage . . . 42
Power Section Oil Leakage . . . 42
Penalty Check Run of Engine . . . 42
QEC Storage After Engine Test . . . 54
Test Limits . . . 3
Speed Control . . . 5
Test Log Sheet Requirements . . . 3
Test Requirements . . . 25
Engine Monitoring System (EMS) Functional Check . . . 27
Test Stand Operating Precautions . . . 5
Torquemeter Runout Test . . . 20
6799876 Torquemeter Runout Test Set . . . 20
Test Set Calibration . . . 21
Test Set Hookup . . . 20
Torquemeter Runout Test Procedure . . . 22
23002970 or 23003266 Torquemeter Runout Test Set . . . 23
Test Set Calibration . . . 23
Test Set Hookup . . . 23
Torquemeter Runout Test Procedure . . . 24

Record of Applicable Technical Directives

Type No.	Date	Title and EDP No.	Date Inc.	Remote
TDC03	12 Nov 92	E–2 Quick Engine Change Kit (QEC) Change No. 10	07–15–04	–––

1. **TEST LIMITS.**

Materials Required

Specification No./Part No.	Nomenclature
MIL–T–5624, Grade JP–4 or JP–5	Fuel
MIL–PRF–23699	Oil, lubricating

WARNING

Do not exceed TPETS HP limit of 6000 HP or operate with a 15 knot crosswind or 10 knots up tailpipe.

NOTE

TPETS turbine temperature gauge is labeled TIT (turbine inlet temperature). When running T56–A–427 engines, gauge indicates CTMT (compensated turbine measured temperature).

a. Table 1 gives engine manufacturers design ratings for information purposes. It is not a criteria for engine rejection or acceptance.

b. Tables 2 and 3 give CTMT limits and fuel and lubricant requirements.

c. Table 4 provides EMS vibration limits which are the vibration test acceptance limits for the engine. Instructions are included in the table for interrogating the EAU using the HMT during an engine run in order to identify the high vibration component.

d. Table 5 gives TPETS vibration shutdown limits. These readings are taken directly from the TPETS gages and must not be exceeded. Actuate pilot record switch and shutdown engine immediately if excessive vibration is indicated by high vibration warning lights, EAU vibe warning light or TPETS gage readings in excess of those listed in table 5. Actuating pilot record switch ensures event data is recorded by the EAU for further investigation.

e. Table 6 shows TPETS vibration limits which may be read from TPETS gages during an engine run. The limits of table 6 may also be used as engine vibration acceptance/rejection criteria if a functional EAU is not available during engine test.

f. Table 7 shows broadband engine investigation limits which are read from the HMT during engine operation. An exceedance of these limits requires further investigation. Refer to vibration summary report from ground station and WP 025 00 for a breakdown of individual bins.

2. TEST LOG SHEET REQUIREMENTS.

Support Equipment Required

Part No./Type Designation	Nomenclature
23032969	Maintenance terminal, handheld (HMT)

a. Use the engine test log (figure 1) to record observed data during test run. This provides an engine test record for future reference and acts as documentary proof that the engine was subjected to prescribed test procedures. Therefore, data must be complete, accurate, neat, and legible.

b. Filling out Log Sheet.

(1) Upon receipt of engine for test, the operator will enter name of activity, engine model, serial number, date, and other pertinent data in blank spaces provided at top of log sheet. Check model and serial number with data plate on engine.

(2) During test, record all unusual occurrences in the remarks section of test log. Actuate pilot record switch to ensure any unusual event data is recorded by the EAU for further investigation using the EMS ground station. Record all starts and shut downs. During starts, record time of day engine was started and maximum turbine measured temperature encountered.

Table 1. Engine Manufacturers Ratings (Standard Day, Sea Level, Static Conditions)

Engine Ratings	Minimum Delivered Prop Shaft Power (HP)	Est. Prop Shaft Torque (lb–in)	Max Prop Shaft Speed (RPM)	Maximum Specific Fuel Consumption	Maximum Engine Rotor Speed (RPM)	Maximum Compensated Turbine Measured Temperature (CTMT) °F (°C)	Est. Engine Air Flow (lb/sec) ± 3%	Maximum Turbine Rotor Inlet Temperature (T41) °F (°C)
Maximum	**5250	24,930	1106	0.473	14,239	1494 (812.3)	34.8	1994 (1090.3)
Intermediate	**5250	24,930	1106	0.473	14,239	1494 (812.3)	34.8	1994 (1090.3)
Maximum Cont	**5250	24,930	1106	0.473	14,239	1494 (812.3)	34.8	1994 (1090.3)
75% Max Cont	***4062	19,288	1106	0.499	14,239	–––	35.0	
50% Max Cont	***2711	12,875	1106	0.572	14,239	–––	35.2	
25% Max Cont	***1351	6,417	1106	0.824	14,239	–––	35.4	
Flight Idle	****				14,239			
Ground Idle					14,100			

The engine is torque limited at 24,926 pound inches (5249.15 HP) thus limiting operation to less than maximum allowable gas temperature at standard, static, sea level conditions.

**Torque limiting in effect.

***The 75%, 50%, and 25% max cont values shown are based on a non–torque limited maximum continuous rating.

****Flight Idle speed at no load condition.

Acceptable range of maximum CTMT is 855°–875°C (nominal is 865°C) (1589°F). Continuous operation above maximum continuous temperature shall not exceed 40 minutes.

Transient engine operation may result in exceeding steady state limitations. The following transient limitations apply:

WARNING

Do not exceed TPETS HP limit of 6000 HP or operate with a 15 knot crosswind or 10 knots up tailpipe.

a. TMT– 930°C (1706°F) permitted for three seconds.

b. ISHP – 5100 to 5999 for 3 seconds or less, no maintenance required. 5100 to 5999 for more than 3 seconds, reduction gear magnetic plug inspection required. 6000 and above, reduction gear assembly replacement is required (WP 030 00)

c. RPM – 96–108% (Due to propeller limitation).

(3) At end of test, record engine coastdown time. This time is defined as the time elapsed from moment fuel is cut off until engine comes to a complete stop. This coastdown time has no absolute value; however, a record kept of all engines will show what the expected average coastdown time should be. Any engine with an abnormally short coastdown time should be viewed with suspicion and investigated for compressor rub or other malfunction.

NOTE

An engine full cycle count includes a completed start and shutdown. If a functional EAU is not available, the engine operator is responsible for keeping the full cycle count in order to ensure an accurate logbook entry.

(4) The operator must sign all test logs and is held responsible for all test data being complete and accurate.

3. SPEED CONTROL.

a. Stabilized GROUND IDLE shall be 98% (13,900 ± 200 rpm), except speed range limit may be higher at lower compressor inlet temperature as follows:

Compressor Inlet Temperature	High–RPM Idle
15.6°C (60°F)	+200 –200 rpm
10.0°C (50°F)	+204 –196 rpm
4.44°C (40°F)	+212 –188 rpm
–1.11°C (30°F)	+222 –178 rpm
–6.67°C (20°F)	+235 –165 rpm
–12.2°C (10°F)	+254 –146 rpm
–17.8°C (0°F)	+280 –120 rpm

NOTE

Speed limits are based on no air being bled from compressor.

b. Engine governing speed must be 100% (14,239 ±75 rpm) with propeller governor on and at sufficient engine power output to cause propeller to govern.

c. Speed fluctuation.

(1) After final control settings have been made, speed fluctuation must not exceed ± 0.7% of 1% (±100 rpm) at GROUND IDLE, FLIGHT IDLE and REVERSE.

(2) Turbine measured temperature, fuel flow, and horsepower will also fluctuate with rpm fluctuation. Fluctuation should not exceed the following limits:

(a) Turbine measured temperature ± 10°C (+ 14° to 50° F).

(b) Fuel flow ± 50 pounds per hour (pph).

(c) Horsepower ± 70 HP.

4. **TEST STAND OPERATING PRECAUTIONS.**

Materials Required

Specification No./Part No.	Nomenclature
MIL–PRF–23699	Oil, lubricating

WARNING

Do NOT approach a turbo prop engine from front or rear during run–up because of danger of personal injury or of engine damage from foreign objects being pulled into engine.

a. Ensure run–up location is free of loose stones and other foreign objects which could pass through the air inlet duct and cause engine damage. Conduct FOD walkdown prior to run.

NOTE

Do not operate engine if crosswind exceeds 15 knots or 10 knots up tailpipe. Check applicable airframe or propeller manuals for possible wind velocity/direction effects.

b. Use the following procedure to assure an oil supply to the power section and reduction gear pressure pumps and to minimize the possibility of engine component damage due to lack of lubrication prior to first motoring or when inlet hoses have been opened for maintenance:

Lubricating Oil, MIL–PRF–23699 2

(1) Provide the engine with a supply of MIL–PRF–23699 lubricating oil. Remove plug (WP 071 00) from the reduction gear oil filter assembly. Retain plug for re–installation and discard old preformed packing.

(2) Remove plug (WP 044 00) from the right side of the power section accessory drive housing cover, adjacent to the power section oil filter. Retain plug for re–installation and discard old preformed packing.

(3) Wait until oil flows from each area and reinstall plugs with new preformed packings. Torque plugs to limits of WP 044 00 and 071 00.

CAUTION

To prevent damage to the propeller brake, the engine shall not be motored more than twice without oil pressure indication. If no oil pressure is indicated, make an investigation.

To prevent starter damage, do not energize starter when engine or starter is rotating. Do not exceed the duty cycle of starter.

(4) Motor the engine without ignition and if oil pressure is not indicated on both power section and reduction gear indicators by 20% RPM, shut down and repeat steps (1) through (4).

c. When temperature is, or recently has been below 32° F (0° C), the compressor rotor may be ice–locked. In this case, blow hot air through nacelle air–intake duct as required to free rotor.

CAUTION

Nacelle preheat should only be used when necessary. The air from a GTC unit is about 350°F. Air at this temperature can quickly bake electrical cables and damage electronic equipment.

d. After an aborted start, drain fuel by purging the engine. Motor engine with starter button engaged, condition lever in GROUND STOP, and power lever at 14° –18°.

CAUTION

Cool engine to 250°C (482°F) or below CTMT before making another start.

e. Discontinue any start if there is no power section or reduction gear oil pressure indication by the time the engine has reached (35%) (4984 rpm).

f. Check engine records to determine if a turbine or compressor seal break–in is required. Use PUSH FOR SEAL BREAK IN button to attain low speeds required by this test.

5. **ENGINE STARTING.**

CAUTION

Before engine is started and operated, inspect to see that all protective covers or plugs are removed from vents and drains, even though there may be no requirements to attach equipment to these openings. Refer to WP 019 00 for preservation and storage instructions.

NOTE

TPETS turbine temperature gauge is labeled TIT (turbine inlet temperature). When running T56–A–427 engine, gauge indicates CTMT (compensated turbine measured temperature).

6. BEFORE START.

a. Ensure all switches and controls are in shutdown position in accordance with table 8 when using the 803AS100–2 test system and Hamilton Standard propeller. Then reset the following switches and controls to their pre–start positions as follows:

(1) Power Lever – Start.

(2) Condition Lever – RUN.

(3) PUSH FOR SEAL BREAK–IN BUTTON – PULLED OUT.

(4) Mech SD switch – NORMAL.

(5) Pull EAU circuit breaker out.

(6) DETC/TD CONT switch – Cycle switch from CONTROL to LIMIT to OFF. Leave switch in LIMIT for at least 5 seconds while cycling. Check annunciator lights for confirmation. Return switch to CONTROL following check.

(7) DETC TEMP CHECK switch – OFF.

(8) NTS CHECK switch – NORMAL.

(9) ENG & AIR INLET DUCT ANTI– ICE switch – OFF.

(10) STARTER switch – PULLED OUT.

(11) FUEL ENRICH switch – OFF.

(12) FUEL GOV CHECK switch – NORMAL.

(13) SYNC POWER switch – OFF.

(14) WEIGHT ON WHEELS switch – GROUND.

(15) Calculating counter power – ON.

(16) Fuel quantity gage – check.

(17) Reset EAU circuit breaker.

b. Calibrate the DETC to coordinator PLA using HMT as follows:

(1) EAU/DETC switch – DETC position.

(2) Connect HMT to HMT cable on test cell.

(3) Press ON key, keyboard should be illuminated.

NOTE

HMT operation instructions will be provided on HMT display. Power lever movements from FLIGHT IDLE to MAXIMUM and back again shall be made slowly. Rapid movements can result in a 2 degree error.

(4) Press CAL key, then PLA key.

(5) Calibrate DETC to coordinator by following instructions on HMT display.

7. ENGINE START PROCEDURES.

CAUTION

Cool engine to 250°C (482°F) or below compensated turbine measured temperature before making another start.

a. Start fuel and hydraulic boost pumps. The LOW FUEL BOOST DISCH light should go out.

b. Press RUN RESET button – RUN light on, GROUND STOP light out. The following lights should be on: NORMAL OIL LEVEL, OIL FULL, ANTI–ICING AIR, and AUTO–FEA THRUST.

CAUTION

To prevent damage to the propeller brake, the engine shall not be motored more than twice without oil pressure indication. If no oil pressure is indicated, make an investigation.

c. Motor the engine without ignition. If oil pressure is not indicated on both power section and reduction gear indicators by 20% RPM, shutdown and check engine oil supply in accordance with WP 022 00.

d. Discontinue any start if there is no power section or reduction gear oil pressure indication by the time the engine reaches (35%) (4850 RPM).

e. Starter button – Depress. The button should automatically pop out when engine speed reaches approximately 60% (8543 rpm). Manually pull button when speed reaches 63.5% (9042 rpm).

CAUTION

The ignition duty cycle should be no more severe than 2 minutes on, 3 minutes off, 2 minutes on and 23 minutes off.

f. During start, the primary pump failure light shall come on, then go out at approximately 63% (9000 rpm). Record speed at which light goes out.

NOTE

Fuel flow will be indicated at approximately 16% (2200 rpm) and light–off will follow. The primary pump failure light may illuminate momentarily then go out. The light normally will illuminate again before engine reaches 63% (9000 rpm).

g. Compressor bleed valves should close at about 91% (13,000 rpm) as noted by a decrease in TMT and fuel flow. Engine speed should stabilize at about 98.3% (14,000 rpm).

h. Time for starter ON to stabilized ground idle shall not exceed 65 seconds.

i. After engine has stabilized at ground idle speed, the AUTO–FEA THRUST light will go out if propeller is delivering more than 500 pounds forward thrust.

CAUTION

If oil inlet temperature or power section and reduction gear oil pressure is not within the limits, it may be necessary to push the PUSH FOR SEAL BREAK IN button to allow for oil inlet temperature and pressure stabilization prior to recording data or continuing run.

j. If compensated turbine measured temperature (CTMT) exceeds 830°C (1526°F) during start, refer to WP 025 00.

8. ENGINE VISUAL INSPECTION FOR OIL, FUEL AND AIR LEAKS DURING INITIAL ENGINE OPERATION.

CAUTION

Monitor oil temperature during maximum reverse operation for high temperature.

a. Obtain stabilized start, then move the PLA from 16 degrees to 0 degrees (full reverse).

b. Visually check the oil and fuel systems for leakage. (Refer to paragraph 48 and Table 3.)

WARNING

Bleed air is extremely hot and can cause skin irritation and or burns.

c. While PLA is at 0 degrees, turn anti–ice switch on and check ducting for air leaks.

CAUTION

Insure oil cooler door is open before turning oil cooler bleed air switch on.

d. Turn oil cooler bleed air switch on and check ducting for air leaks.

e. Turn both oil cooler bleed air and anti–ice air switches to the off position.

WARNING

Ensure that personnel are clear of the propeller blast area before moving PLA to 16 degrees.

f. Move PLA to 16 degrees and continue with engine test.

g. Check split lines for air leaks. (Refer to WP 025 00)

9. **ENGINE SHUTDOWN PROCEDURES.**

10. NORMAL SHUTDOWN.

a. Make shutdown with power lever at minimum torque (14–18 degrees PLA) position by moving condition lever to GRND STOP position. Refer to WP 006 00.

b. Run at low speed ground idle for no less than two minutes before shutdown.

c. Following the run, move the WT. ON WHEELS switch to AIRBORNE. Wait 5 seconds, then return to GROUND position.

T56-A-427 RUN SHEET

ENGINE MODEL:	QECA SERIAL NO.:	TEST TIME:	TEST DATE:
O.A.T.:	FUEL TEMP:	FUEL SPEC GRAV.:	BARO PRES:
T/M SERIAL NO.:	HMT MIN HP:	TGT MIN HP:	OFFSET CAL:
START TIME:	START TEMP:	FULL CYCLE COUNT:	COAST DOWN TIME:
OPERATOR:	RECORDER:	CDI:	FUEL USED:

** INITIATE PILOT RECORD SWITCH AT STABLIZED CONDITIONS

	PLA	CTMT	F/F	RPM	%	HP	PS PRES	GB PRES	OIL TEMP	EMS/TS GVIB		EMS/TS CVIB		EMS/TS TVIB		P/R/TIME
1. GRD IDLE (4)																
2. FLT IDLE (2)																
3. 4600 (HP) EFF																
4. MAXIMUM (2)																
5. MAX REVERSE (1)																

P=PASS / F=FAIL	P	F		P	F
A. EAU SET UP (STATIC)			K. CTMT/TMT (34 DEGREES)		
B. DETC CALIBRATION (STATIC)			Q. AUTO FEATHER (LIGHT) CHECK (SHUTDOWN)		
C. DETC CONT/LIMIT/OFF (STATIC)			M. DETC CHECK (34 DEG/MAX)		
D DETC TEMP CHECK SWITCH (STATIC)			P. REVERSE THRUST OPT. CHECK (REV)		
E. CDP/CDT SENSOR (HSGI)			N. F/C GOVERNOR/PITCHLOCK CHECK (34 DEG/MAX)		
F. DETC TORQUE CALIBRATION (HSGI)/MIN POWER CALCULATION			O. 70 DEG. PLA (3393 ± 75 HP)		
G. EMS FUNCTIONAL CHECK (HSGI)			L. ENGINE PERFORMANCE % @ O.A.T.		
H. FINAL CONTROL CHECK (13,900 ± 200 RPM)			R. MECH FUEL SHUTOFF CHECK		
I. ANTI-ICE CHECK (34 DEGREES)			S. FIRE DETECT. CHECK		
J. NACELLE OIL COOLER CHECK (BELOW 34 DEGREES)			T. MAG CHIP DETECT. CHECK		

REMARKS:

CIP –

CIT –

PS7 –

CTMT –

TM HP –

Figure 1. Sample Test Log Sheet

Table 2. Compensated Turbine Measured Temperature (TMT) Limits

Condition	Limits	Action Required
		WARNING Do not exceed TPETS HP limit of 6000 HP with a 15 knot crosswind.
Start	830°C Maximum	
Overtemperature during start	Exceeds 830°C	Immediately discontinue start and make checks A or B as necessary to correct condition. (1) Shut down engine. Record. (2) Make overtemperature inspection. Refer to this WP. (3) If inspection reveals no damage, make overtemperature checks as necessary to correct condition.
	Exceeds 930°C	(1) Shutdown engine immediately and record. (2) Reject engine. Return turbine unit to depot for blade and vane inspection and repair.
Torch	Anytime other than enrichment flash	(1) Shutdown engine and record. (2) Make an over temperature check in accordance with this table. (3) If engine is serviceable, troubleshoot to determine cause of torching in accordance with WP 025 00.

Starting overtemperature checks

NOTE

Concurrence of an overtemperature may be achieved by interrogating the EAU.

(1) Connect the HMT to the EAU. Switch the EAU/DETC switch to EAU.
(2) Press key labeled EXC for exceedance.
(3) If no exceedances have been detected, the message “No Exceedance” is displayed.
(4) If more than one exceedance has been detected, the HMT will display each with successive keying of the EXC key.

A. Overtemperature with DETC/TD CONT switch OFF.

(1) Check compressor inlet temperature system.

(2) If DETC is operational, attempt with DETC in CONTROL.

(3) Check 5th– and 10th stage bleed valve positions. Should be open below 91.3% (13,000 rpm); close at 91.3% (13,000 rpm)

(4) Check diffuser bleed ducts.

(5) Check fuel nozzles for coking.

(6) If the preceding checks do not correct the condition, replace fuel control.

B. Overtemperatures with DETC/TD CONT switch in LIMIT or CONTROL.

(1) Check DETC for faults.

Table 2. Compensated Turbine Measured Temperature (TMT) Limits (Contd)

Condition	Limits	Action Required
Torch (–cont)	(2) Monitor LVDT for trim valve operation. (a) Place EAU/DETC switch in DEC position. (b) Press TRIM/% key on HMT. Display will show TRIM IN = XXX. (c) A value less than 0.024 indicates the trim valve is adding fuel. (d) A value between 0.024 and 0.044 indicates approximate null position. (e) A value greater than 0.044 indicates the valve is taking fuel. (3) If preceding checks are not within limits replace DETC. (4) If replacement of DETC does not correct problem, replace fuel control.	
Max	865°C Max continuous	Stabilized reading at 90° power lever position.
Power change	865°C Max continuous	865°C may be exceeded for a maximum of 3 seconds up to a maximum of 930°C.
	WARNING Do not exceed TPETS HP limit of 6000 HP or operate with a 15 knot crosswind.	
	5100 HP Max	5100 HP may be exceeded for a maximum of three seconds up to a maximum of 6000 HP.
Overtemperature during power change	865°C to 930°C for more than 3 seconds	(1) Shut down engine and record. (2) Perform steps A and B of power change overtemperature check to correct condition.
	Exceeds 930°C	(1) Shutdown engine immediately and record. (2) Reject engine. Return turbine unit to depot for blade and vane inspection and repair.
	Power change overtemperature checks A. Check indicating system before proceeding with steps B and C. B. Make a static digital electronic control system checkout. (1) Check DETC for faults. (2) Check temperature limiting function. Refer to Digital Electronic Trim Control Check, this WP. (3) If the above steps do not correct the problem, replace the fuel control.	
	Overtemperature inspection A. Using a bright light, inspect turbine 4th stage blades and vanes for cracks, deformation, and general condition. B. Inspect turbine 1st stage blades and vanes with the internal viewing borescope. Refer to Borescope Inspection of Turbine First Stage Vanes and Blades, this WP. C. If above inspection shows no damage, remove and visually inspect all thermocouples.	

Table 3. Fuel and Lubricant Requirements for Engine Test

Item	Requirements	Remarks
Aviation Turbine Fuel MIL–T–5624 (Grade JP–4, JP–5)	**24**	
Fuel		
Specification	MIL–T–5624, grade JP–4 and JP–5	
Inlet pressure	5 to 40 psig	Maintain at all times.
Leakage limits	four cc per minute	Maximum total from all seal drain points. (Engine running)
	one cc per minute	Maximum from any one seal drain point. (Engine running)
	two cc per minute	Maximum for manifold drain valve during engine operation, at 100% (14,239 rpm).
	five cc per minute	Maximum for fuel pump drain seal when engine static.
Lubricating Oil, MIL–PRF–23699	**2**	
Lubricant		
Specification	MIL–PRF–23699	
Oil inlet temperature	50° to 90°C (122° to 194°F)	For normal operation.
	100°C (212°F)	Maximum for 30 minutes at Flight Idle and below; Ground operation only.
Oil pressure–normal operation – 14,239 rpm and 140° to 194°F (60° to 90°C) oil inlet temperature		
Power section	55 ±5 psi	May peak as high as 80 psi during start and as low as 40 psi at low speed ground idle.
Reduction gear	150 psi	Minimum at (14,239 rpm).
	180 psi	Nominal.
	250 psi	Maximum, except during warm–up when ambient temperature is below 59°F (15°C).
Allowable pressure fluctuation		
Power section	± 5 psi	Maximum.
Reduction Gear	±10 psi	Maximum.
Oil leakage check	Refer to Power Section Oil Leakage or Reduction Gear Oil Leakage, this WP.	
Allowable oil consumption	0.35 gallons per hour	Maximum power. If exceeded, look for leaking oil seals to replace.

Table 4. EMS Vibration Limits

CAUTION

If excessive vibration is encountered which appears to be caused by a mechanical failure or impending failure, such as a steady vibration increase after reaching ground idle; or if sparking or other abnormal engine operation is noted, actuate pilot record switch and shutdown immediately. Actuating pilot record switch ensures event data will be recorded by the EAU for further investigation.

NOTE

The engine monitoring system (EMS) includes vibration pickups located at the reduction gearbox, compressor and turbine. The output of each may be displayed on the HMT when connected to the EAU. The EAU outputs an overall vibration signal as well as specific components at turbine and prop rotational frequencies. The EMS vibration pickups are accelerometer type with an output of inches per second instead of mils.

Maximum Acceptable Limits (Inches per second)

Location	Prop 1106 RPM (18.4 Hz)	Ground Idle 13,800 RPM (230 Hz)	100% 14,239 RPM (237.3 Hz)
Compressor	1.0	1.7	1.7
Turbine	1.0	1.7	1.7
Reduction Gear	1.0	2.2	2.2

Instructions for Interrogating the EAU for Vibration Readings

NOTE

All EMS readings taken on TPETS will be for the left engine.

The overall vibration reading may be displayed by pressing the HMT menu key four times. CVIB, GVIB, TVIB and %RPM will be displayed for the left engine.

The specific components at prop and turbine rotational frequencies may be displayed on the HMT by entering the display mode and keying the following codes:

Location	Code Prop Rotational 18.4 Hz	Engine Rotational 230 Hz	Engine Rotational 237.3 Hz

NOTE

Use SPACE key between CV, TV or GV and numbers.

For version 5.1 and earlier EAU's			
Compressor	CV 02	CV 11	CV 12
Turbine	TV 02	TV 11	TV 12
Reduction Gear	GV 02	GV 11	GV 12
For version 6.1 and later EAU's			
Compressor	CV 03	CV 15	CV 16

Table 4. EMS Virbration Limits (cont)

Location	Code Prop Rotational 18.4 Hz	Engine Rotational 230 Hz	Engine Rotational 237.3 Hz
Turbine	TV 03	TV 15	TV 16
Reduction Gear	GV 03	GV 15	GV 16

More in–depth isolation is possible with the activation of the FFT data trigger. This can be done by attaching the HMT to the EAU and entering the FFT trigger code. The EMS ground station also contains several reports that may help to further isolate a vibration problem. Refer to the T56–AGT–SM000 for instructions on how to operate the ground station and produce the reports. Testing has indicated that particular components are excited by frequencies in the bins as indicated in WP 025 00.

Table 5. TPETS Gage Vibration Shutdown Limits

CAUTION

Do not exceed these limits. Actuate pilot record switch and shutdown engine immediately. Actuating pilot record switch ensures event data will be recorded by the EAU for further investigation.

Location	15 Hz Filter	150 Hz Filter
Compressor	30 mils	2.5 mils
Turbine	30 mils	2.5 mils
Reduction Gear	30 mils	3.5 mils

Table 6. TPETS Gage Vibration Limits

NOTE

A sudden increase of two mils or more during stabilized operation is cause for investigation. If vibration exceeds two mils during an acceptance run startup (starter actuation to ground idle), satisfactory engine operation must be demonstrated immediately by making two successive starts where the vibration does not exceed two mils. Check EAU for concurrence. Refer to Table 4.

The vibration limits in this table may be used as engine acceptance/rejection criteria for vibration when a functional EAU is unavailable during test.

Limits	Remarks
Compressor	
Two mils max.	Any condition with a 150 Hz filter in pickup.
Turbine	
Two mils max.	At 75% (10,720 rpm) and above with a 150 Hz filter in pickup circuit.
Four mils max.	At 68 – 72% (9700 – 10,300 rpm) with a 150 Hz filter in pickup circuit.

Table 6. TPETS Gage Vibration Limits (cont)

	NOTE If vibration indication exceeds thirty mils, investigate security of engine mounts, vibration pickup mounting brackets and propeller balance. Interrogate the EAU with the HMT for concurrence of limit exceedances. Refer to Table 4.
Thirty mils max.	Turbine vibration of thirty mils (with a 15 Hz filter in pickup circuit) shall not be exceeded. This limit applies to vibration caused by a ”rough” propeller or test equipment and is not a measure of engine acceptability.
Reduction Gear	
Three mils max.	At stabilized running with a 150 Hz filter in pickup circuit.

Table 7. Broadband Engine Investigation Limits

NOTE

Readings are from HMT.

Exceedances require further investigation. Refer to vibration summary report from EMS ground station and WP 025 00 for a breakdown of individual bins.

CVIB	2.5 Inches/second
TVIB	2.5 Inches/second
GVIB	3.5 Inches/second

Table 8. Position of TPETS Controls and Switches for Engine Testing

Name	Shutdown	Operating
All circuit breakers	ON	ON
Digital fuel flow indicator	OFF	ON. Check operation of instruments by pushing respective TEST buttons before starting engine.
Digital CTMT indicator	OFF	ON. Check operation of instruments by pushing respective TEST buttons before starting engine.
Fuel temperature gage	Operable	Operable
Outside air temperature gage	Operable	Operable
EAU/DEC switch	N/A	Determines which unit (EAU or DETC) the HMT is interrogating.
Weight on Wheels (WOW) switch	ON	The WOW switch simulates a flight condition to the EAU and allows recording of certain accumulated totals. During testing, the WOW switch should be in the GROUND position until run is complete. After the run, the switch should be moved to the AIRBORNE position. Wait 5 seconds, then return to the GROUND position.

Table 8. Position of TPETS Controls and Switches for Engine Testing (cont)

Name	Shutdown	Operating
Pilot Record Switch	OFF	The PRS may be used at any time to record data to tape. Switch must be on for 1 second minimum. Recording is at the discretion of the operator and may help with troubleshooting tape analysis which will be accomplished on the Allison EMS Ground Station.
NOTE Record the calibration number marked on the vibration pickups. Multiply meter reading by this number to obtain corrected readings.		
VIBRATION METER	Power Switch OFF	Power Switch ON – Allow for 15–minute warm–up.
Digital RPM indicator.	OFF	ON. Check operation of instruments by pushing respective TEST buttons before starting engine.
Oil temperature gage	Operable	Operable
Oil pressure – power section gage	Operable	Operable
Oil pressure – reduction gear gage	Operable	Operable
Marconi HP indicator	Operable	Operable
L IND/R IND switch	N/A	Determines which side (left or right) of horsepower indicator is being used.
light	OFF	ON with engine installed.
Pressure gage panel	Operable	Operable
EAU VIB light	OFF	ON when EAU detects vibration exceedance.
EAU LOW POWER light.	OFF	ON when EAU detects low power.
THROTTLE POSITION indicator power switch	OFF	ON–allow for 15–minute warm–up.
Analog RPM gage	Operable	Operable
Analog CTMT gage	Operable	Operable
Run light	Operable	ON after RUN RESET pushed.
PRI PUMP OUT light	OFF	OFF. Should be ON then go OFF at 63% (9000 rpm) during engine starting cycle.
LOW FUEL BOOST DISCH light	OFF	OFF. The light should go OFF shortly after the fuel boost pump is turned ON. The light will be ON until fuel boost pressure exceeds 18 to 22 psi.
Fuel STRAINER BYPASS light	OFF	OFF. Light ON if approximately 7.5 psi pressure differential is exceeded across the low–pressure fuel filters.
FEATHER light	OFF	Should come ON each time the condition lever is moved to FEATHER.

Table 8. Position of TPETS Controls and Switches for Engine Testing (Contd)

Name	Shutdown	Operating
Main Pump light	ON, unless feather or unfeather condition is activated.	OFF. After prop pump pressure build–up.
Standby pump light	ON	OFF. After prop rotation causes prop pump pressure build–up.
MAG CHIPS light	OFF	OFF. Light comes ON when particles build up on either of the magnetic chip detectors located in the reduction gear or power section.
LOW OIL LEVEL light	OFF	OFF. Do not start engine if this light is ON. Light is ON when oil level in supply tank drops below 6.4 gallons. Refer to WP 025 00.
	NOTE If QEC change No. 10 is incorporated, the oil low light will remain on until positive oil pressure is obtained at approximately 35% RPM.	
Fire warning light	OFF	OFF during engine test, the light will come ON if a temperature higher than 575°F is sensed near the compressor section.
RUN RESET button		Must be reset before each engine start. The condition lever must be in RUN. After the RESET button is pressed, the GROUND STOP light will go OUT and the RUN light will come ON. Do not actuate RUN RESET button before stop.
DETC TEMP CHECK switch	OFF	OFF. ON during max temperature check.
GROUND STOP light	OFF	ON until the RESET button pushed–see above.
PROP RESYNC switch	Operable	Operable
AUTO–FEA THRUST light	OFF	ON before engine start. Should be OFF during normal engine operation. Should be ON after engine shutdown and during reverse thrust operation. Light ON indicates that the thrust sensitive system has operated properly. (Thrust sensitive system operates when propeller delivering less than 500 pounds forward thrust.)
PROP BETA RANGE light	ON unless prop blade angle is 12.5° to 14°.	ON unless prop blade angle is 12.5° to 14°.
NTS IND (indicating) light	OFF	OFF. When NTS check held in CHECK position, the NTS IND light will come on if the system is operating properly.

Table 8. Position of TPETS Controls and Switches for Engine Testing (Contd)

Name	Shutdown	Operating
OIL COOLER BLEED AIR light	OFF	The light should come ON when the switch is flipped ON.
FIRE DET switch	NORMAL	NORMAL. Held in TEST before engine start. The fire warning light should come ON if the system is operating properly.
PUSH FOR SEAL BREAK IN button	Pulled OUT	Pulled OUT. Use as required for turbine seal break–in run.
MECH S D switch	NORMAL	NORMAL. Held in MECH S D (mechanical shutdown) when making a feather shutdown with the condition lever. Used to check mechanical linkage to the fuel control shutoff valve.
FUEL ENRICH switch	OFF	The fuel enrich system is not available on T56–A–427 engines.

CAUTION

Do not hold switch FORWARD for more than propeller manufacturer recommended duty cycle.

UNFEATHER switch	VERTICAL	Hold FORWARD when unfeathering propeller. Propeller blades will rotate to the angle called for by the power lever.
SERVO ISOLATION switch	NORMAL	NORMAL. Switch to MECH to disarm electronic prop governing, and to check prop hydraulic governor.
EMERG SHUTDOWN	Green Button IN.	Green button IN. Push red button in emergency.
NTS CHECK switch	NORMAL	NORMAL. Held in CHECK position to check operation of the negative torque signal system when engine shut down. Power lever is at START position and engine shutdown by moving condition lever to GROUND STOP. If the system is operating properly, the NTS IND light will come ON.
OIL COOLER BLEED AIR switch	OFF	Use as required to control engine oil temperature. The light should come ON when the switch is flipped ON.

Table 8. Position of TPETS Controls and Switches for Engine Testing (Contd)

Name	Shutdown	Operating
	CAUTION Do not hold STARTER switch IN.	
STARTER	Pulled OUT	Push IN during start.
DETC CONTROL DEGRADE light	OFF	ON when DETC/TD CONT switch is in LIMIT or OFF position.
DETC/TD CONT switch	CONTROL	CONTROL or LIMIT. OFF during fuel governor check.
DETC LIMIT DEGRADE light	OFF	ON when DETC/TD CONT switch is in OFF position.
FEATHER OVERRIDE	NORMAL	NORMAL. Override position only when necessary to continue driving feather pump after condition lever feather position has shut off pump.
SYNC POWER switch (synchronizer)	OFF	ON. 400 Hz power supply and DC power for phase synchrophaser.
	CAUTION Do not switch FUEL GOV CHECK switch back to NORMAL at high power settings.	
FUEL GOV CHECK switch	OFF	NORMAL. CHECK position used in conjunction with the power lever when checking operation of the fuel control governor or propeller pitch lock. Sync power ON. DETC OFF.
OIL COOLER DOOR ACTUATOR	AUTO	AUTO or as required.
ENG & AIR INLET DUCT ANTI–ICE switch and light	OFF	OFF. Used as required during testing or when icing conditions are encountered. Anti–icing light is ON when switch OFF. The light is OFF when switch is ON.
CONDITION LEVER	GROUND STOP	RUN. The GROUND STOP light will be ON until the RUN RESET button on the removable panel is pushed. After the RESET button is pushed, the RUN light is ON. The engine cannot be started until this light is ON.
POWER LEVER	16° ± 2°	16° ± 2° before start, then use as required.
ANNUNCIATOR TEST button	Operable	Operable
ANNUNCIATOR ACKNOWLEDGE button	Operable	Operable
INTERCOM switch	Operable	Operable

Table 8. Position of TPETS Controls and Switches for Engine Testing (Contd)

Name	Shutdown	Operating
FIRE EXT. AUX switch	Operable	Operable
FIRE EXT. NORM	Normal	Operable
BATT switch	OFF	ON
Fuel level indicator	Operable	Operable
CAUTION		
Failure to follow power up procedure in WP 022 00 will result in damage to the DETC.		
60 Hz test power	OFF	As required.
400 Hz, 3 phase	OFF	As required.
400 Hz, single phase	OFF	As required.
28 V DC power	OFF	As required.
PRESERV. PUMP switch	OFF	OFF
HYDRAULIC PUMP	OFF	ON
FUEL PUMP	OFF	ON
AIR COND switch	OFF	Either HEAT, COOL, or OFF as required.
CAB LIGHTS switch	OFF	ON or OFF as required.

11. EMERGENCY SHUTDOWN.

NOTE

Engine restart within 7 minutes and LSGI operation for not less than 2 minutes must be performed to reduce fuel nozzle coking and eliminate the need for a HSGI shutdown logbook entry.

a. An emergency shutdown may be made at any power lever position by pushing EMERG. SHUTDOWN button or by moving condition lever to FEATHER. This closes fuel control shutoff valve electrically and mechanically, and feathers propeller for a quick stop.

b. Immediately following a feather shutdown, move condition lever to GRND STOP and return all applicable switches to OFF or NORMAL positions. Move power lever to the 20 degree position and return propeller blades to start position with unfeather switch.

12. COMPRESSOR ROTOR BLADE TO COMPRESSOR CASE RUB.

a. During engine shutdown, blade rub (visual or audible) may vary from none to heavy. Whenever compressor blade tip rub is detected on coastdown, the following procedure will be used to determine if engine is acceptable:

b. Slight compressor drag when engine is hot is permissible.

c. Audible blade tip rub is acceptable during coastdown.

d. A slight scraping or brushing sound during rotation of engine when cold is acceptable.

13. **TORQUEMETER RUNOUT TEST**.

14. Perform a torquemeter runout test whenever the Reduction Gearbox or Torquemeter is replaced, or when “whip” is suspected of causing excessive engine vibration; Reject torquemeter if runout exceeds 24 mils.

15. 6799876 TORQUEMETER RUNOUT TEST SET. (figure 2)

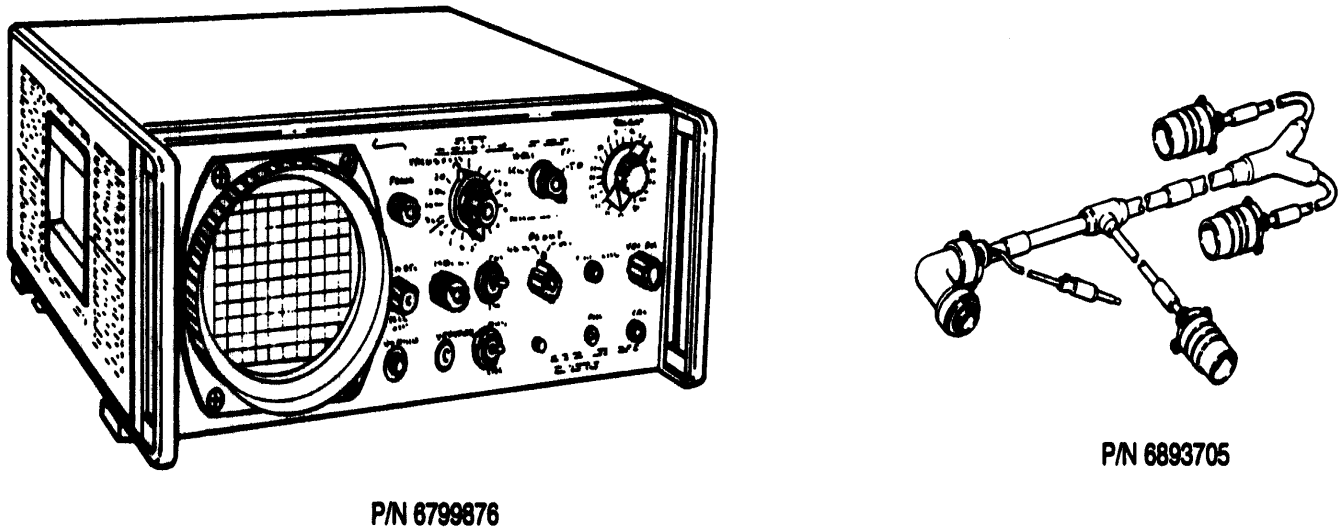

Figure 2. 6799876 Torquemeter Test Set and 6893705 Test Set Adapter Cable

16. **Test Set Hookup.**

Support Equipment Required

Part No./Type Designation	Nomenclature
6799876	Test Set, torquemeter runout
6893705	Cable, test set adapter

a. Disengage circuit breaker CB4 in the 115 Volt, 400 Hertz power bus line.

b. Disconnect torquemeter harness from torquemeter indicator.

c. Connect torquemeter runout test set adapter cable 6893705 as follows:

(1) Connect UTMI CABLE test set lead to torquemeter harness.

(2) Connect UTMI CONN test set lead to torquemeter indicator.

(3) Install TS CONN connector to test set. Attach adapter cable alligator clip to ground.

d. Reengage circuit breaker CB4 in the power bus line.

17. **Test Set Calibration.**

a. Place test set P.U. OUTPUT switch to T.M.

b. Turn test set power switch ON.

NOTE

The engine must be started, prior to calibration adjustments, to provide a torquemeter pickup signal necessary for horizontal sweep.

c. Start engine and allow RPM and horsepower indications to stabilize. Leave power lever at START. Operate engine at high speed ground idle (HSGI) and trim for minimum torque.

d. Set P.U. OUTPUT switch to RUNOUT and rotate INTENSITY control clockwise until a trace appears. If no trace appears, push beam button then adjust the HORIZ POS and VERT POS controls to center the trace on the scope.

e. Allow approximately 10 minutes test set warm up time before making the following calibration adjustments.

(1) Adjust FOCUS and INTENSITY controls for a well-defined trace of the desired intensity.

(2) Set READ-CAL switch to CAL position. Adjust the vertical position control until trace is on the bottom line.

(3) Adjust HORIZ POS and VERT POS controls to place the CAL signal on the third line above the bottom graticule horizontal line (figure 3).

(4) Set READ-CAL switch to READ.

18. **Torquemeter Runout Test Procedure**.

a. With engine running, set test controls as follows to perform torquemeter runout:

(1) P.U. OUTPUT switch to RUNOUT.

(2) Place ENGINE SPEED switch to H.S.G.I.

(3) TOR-REF switch to REF.

(4) READ-CAL switch to READ.

(5) Adjust HORIZONTAL SWEEP TIME and VERNIER controls to obtain a 2 to 3 cycle trace without drift. (The 1 or 2 MILLISECOND/CM setting of HORIZONTAL SWEEP TIME control is usually required.)

NOTE

The waveform peaks will be more or less pronounced depending on the amount of runout. The peaks may not always be visible while obtaining a reading in the maximum gap position. This does not affect the accuracy of the test.

b. Adjust MILS GAP control until waveform troughs (figure 4) are in line (as closely as switch position will allow) with the bottom and third reference grid lines (Maximum Gap). Note reading on MILS GAP control and record on data sheet. (See figure 8.)

c. Adjust MILS GAP control until waveform peaks (figure 5) are in line (as closely as switch position will allow) with the bottom and third reference grid lines (Minimum Gap). Note reading of MILS GAP control and record.

d. Subtract reading obtained in step c from reading obtained in step b. Difference represents amount of torquemeter runout.

e. Place TOR-REF switch to TOR and repeat steps b through d.

NOTE

To accomplish the runout check at a speed other than HSGI, the P.U. OUTPUT switch is set to T.M. during engine power lever changes; then, the ENGINE SPEED switch is set to correspond to the engine operating condition, and the P.U. OUTPUT switch is returned to RUNOUT.

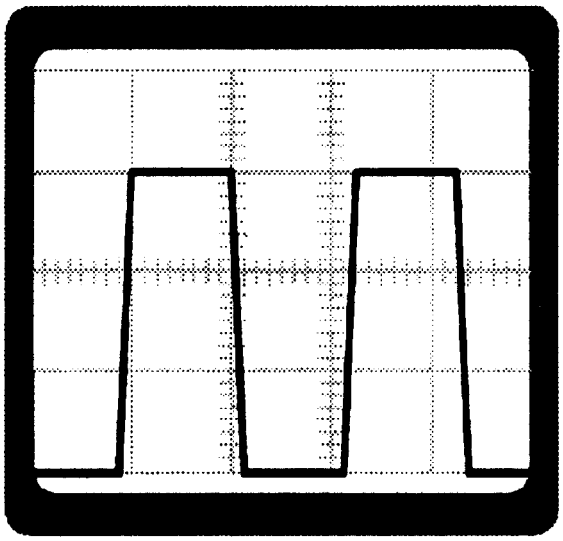

Figure 3. Typical Calibration Signal

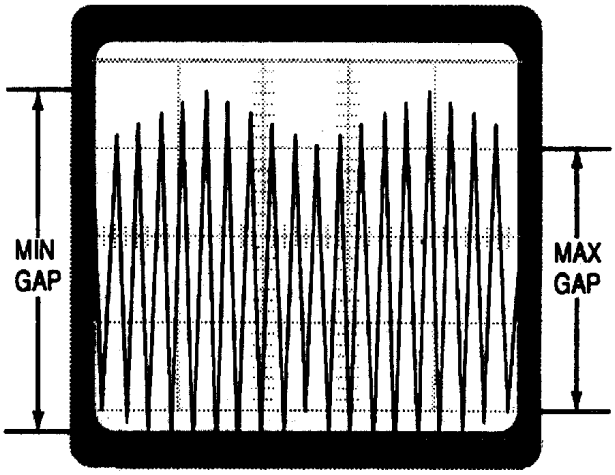

Figure 4. Signal With Test Set Adjusted To Read Maximum Gap

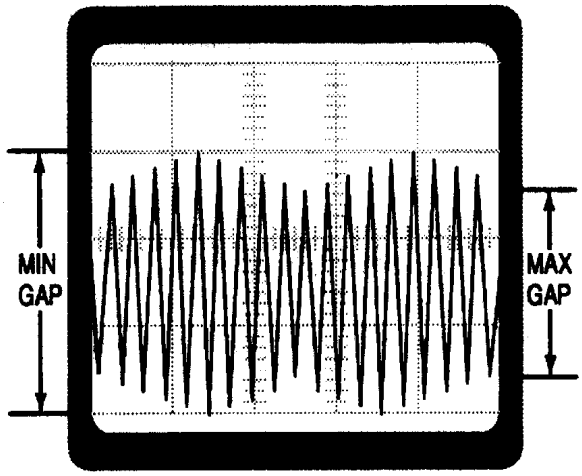

Figure 5. Signal With Test Set Adjusted To Read Minimum Gap

f. Repeat steps a through e for low speed ground idle (L.S.G.I.), flight idle (FLT I), and takeoff (T.O.).

g. If torquemeter runout exceeds 24 MILS during steps a through f, reject engine.

h. Shut down engine.

i. Turn test set power switch off.

j. Disengage circuit breaker CB4 in the 115 Volt, 400 Hertz power bus line.

k. Disconnect the connector marked TS CONN from the test set. Disconnect the cable alligator clip from ground.

l. Disconnect connector marked UTMI CABLE from torquemeter harness.

m. Disconnect connector marked UTMI CONN from torquemeter indicator.

n. Reconnect torquemeter indicator to torquemeter harness.

o. Reengage circuit breaker CB4 in the 115 Volt, 400 Hertz power bus line.

19. 23002970 or 23003266 TORQUEMETER RUNOUT TEST SET. (figures 6 and 7)

20. **Test Set Hookup**.

Support Equipment Required

Part No./Type Designation	Nomenclature
23002970 or 23003266	Test Set, torquemeter runout
6799878	Cable, test set adapter

NOTE

These instructions apply to 23003266 torquemeter runout test set which is identical to 23002970 (figure 6) except that it is permanently mounted in TPETS control cab.

a. Disengage circuit breaker CB4 in the 115 Volt, 400 Hertz power bus line.

b. Disconnect torquemeter harness from torquemeter indicator.

c. Connect 6799878 torquemeter runout test set adapter cable as follows:

(1) Connect UTMI CABLE test set lead to torquemeter harness.

(2) Connect UTMI CONN test set lead to torquemeter indicator.

(3) Install TS CONN connector to test set. Attach adapter cable alligator clip to ground.

d. Reengage circuit breaker CB4 in the power bus line.

21. **Test Set Calibration**.

a. Place test set P.U. OUTPUT switch to T.M.

b. Turn test set power switch ON.

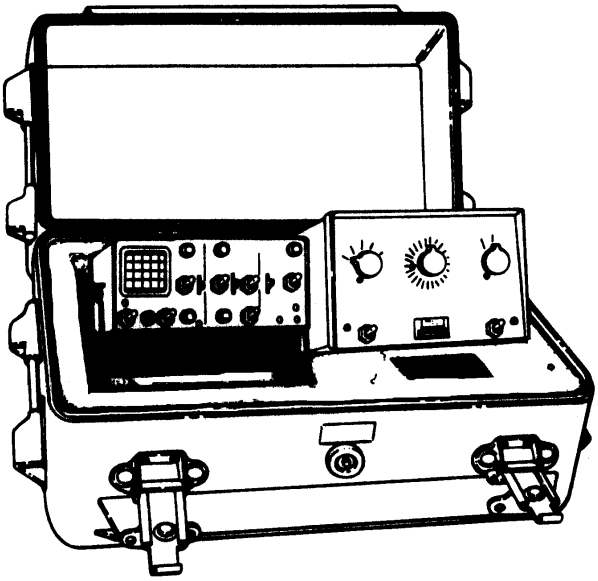

Figure 6. 23002970 Torquemeter Runout Test Set

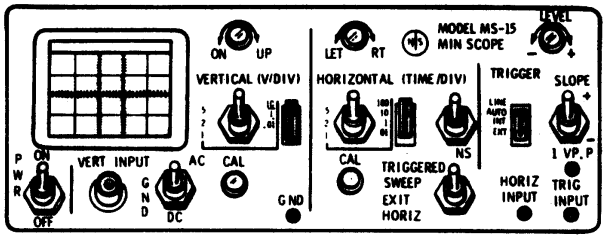

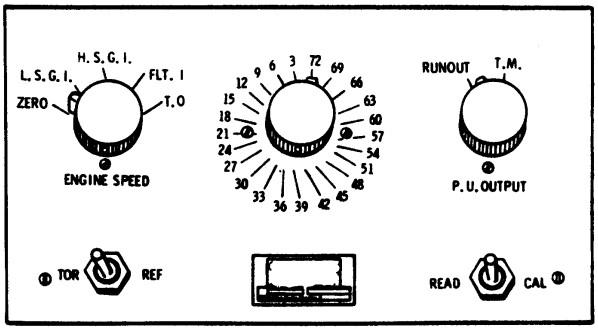

Figure 7. Control Panel, Torquemeter Runout Test Set 23002970

NOTE

The engine must be started, prior to calibration adjustments, to provide a torquemeter pickup signal necessary for horizontal sweep.

c. Start engine and allow RPM and horsepower indications to stabilize. Leave power lever at START. Operate engine at high speed ground idle (HSGI) and trim for minimum torque.

d. Set P.U. OUTPUT switch to RUNOUT and rotate INTENSITY control clockwise until a trace appears. If no trace appears, push beam button then adjust the HORIZ POS and VERT POS controls to center the trace on the scope.

e. Allow approximately 10 minutes test set warm up time before making the following calibration adjustments:

(1) Set engine speed switch to zero.

(2) Adjust FOCUS and INTENSITY controls for a well-defined trace of the desired intensity.

(3) Set READ-CAL switch to CAL position. Adjust the vertical position control until trace is on the bottom line.

(4) Adjust HORIZ POS and VERT POS controls to place the CAL signal on the third line above the bottom graticule horizontal line (figure 3).

(5) Set READ-CAL switch to READ.

22. **Torquemeter Runout Test Procedure**.

a. With engine running, set test controls as follows to perform torquemeter runout:

(1) P.U. OUTPUT switch to RUNOUT.

(2) Place ENGINE SPEED switch to H.S.G.I.

(3) TOR-REF switch to REF.

(4) READ-CAL switch to READ.

(5) Adjust HORIZONTAL SWEEP TIME and VERNIER controls to obtain a 2 to 3 cycle trace without drift. (The 1 or 2 MILLISECOND/CM setting of HORIZONTAL SWEEP TIME control is usually required.)

NOTE

The waveform peaks will be more or less pronounced depending on the amount of runout. The peaks may not always be visible while obtaining a reading in the maximum gap position. This does not affect the accuracy of the test.

b. Adjust MILS GAP control until waveform troughs (figure 4) are in line (as closely as switch position will allow) with the bottom and third reference grid lines (Maximum Gap). Note reading on MILS GAP control and record on data sheet. (See figure 8.)

c. Adjust MILS GAP control until waveform peaks (figure 5) are in line (as closely as switch position will allow) with the bottom and third reference grid lines (Minimum Gap). Note reading of MILS GAP control and record.

d. Subtract reading obtained in step c from reading obtained in step b. Difference represents amount of torquemeter runout.

e. Place TOR–REF switch to TOR and repeat steps b through d.

NOTE

To accomplish the runout check at a speed other than HSGI, the P.U. OUTPUT switch is set to T.M. during engine power lever changes; then, the ENGINE SPEED switch is set to correspond to the engine operating condition, and the P.U. OUTPUT switch is returned to RUNOUT.

f. Repeat steps a through e for low speed ground idle (L.S.G.I.), flight idle (FLT I), and takeoff (T.O.).

g. If torquemeter runout exceeds 24 MILS during steps a through f, reject engine.

h. Shut down engine.

i. Turn test set power switch off.

j. Disengage circuit breaker CB4 in the 115 Volt, 400 Hertz power bus line.

k. Disconnect the connector marked TS CONN from the test set. Disconnect the cable alligator clip from ground.

l. Disconnect connector marked UTMI CABLE from torquemeter harness.

m. Disconnect connector marked UTMI CONN from torquemeter indicator.

n. Reconnect torquemeter indicator to torquemeter harness.

o. Reengage circuit breaker CB4 in the 115 Volt, 400 Hertz power bus line.

23. **TEST REQUIREMENTS.**

NOTE

TPETS turbine temperature gauge is labeled TIT (turbine inlet temperature). When running engine, gauge indicates CTMT (compensated turbine measured temperature).

a. Run engine with digital electronic trim control (DETC) in CONTROL mode, unless otherwise indicated.

b. Run engine at settings indicated for the time specified in Table 9. Determine if rpm and compensated turbine temperature (CTMT) are within limits for each power lever setting.

c. Approach all settings from last previous setting. If setting is overshot, return power lever to previous setting and repeat. Check torquemeter calibration before each test.

d. Data to be recorded during engine start.

(1) Time in minutes from starter ON to stabilized rpm.

(2) Maximum indicated CTMT during start.

e. Data to be recorded at stabilized start speed and at other power lever settings. Use pilot record switch (PR) and record on run sheet. Actuating PR switch ensures event data will be recorded by the EAU for future use or further investigation using the EMS ground station.

(1) RPM.

(2) Power lever position.

(3) Fuel flow in pounds per hour. (PPH).

Torquemeter Runout Data Sheet

Station

Operator

Aircraft Serial No.

Date

Position No.1	Serial No.	Time (Hours)	
		Since New/OH	Total
Power Section			
Reduction Gear			
Torquemeter			

		L.S.G.I.		H.S.G.I.		Flight Idle		Max Power	
		REF	TOR	REF	TOR	REF	TOR	REF	TOR
Torquemeter Runout (mils)	Maximum								
	Minimum								
	Difference								

Remarks:

Position No.2	Serial No.	Time (Hours)	
		Since New/OH	Total
Power Section			
Reduction Gear			
Torquemeter			

		L.S.G.I.		H.S.G.I.		Flight Idle		Max Power	
		REF	TOR	REF	TOR	REF	TOR	REF	TOR
Torquemeter Runout (mils)	Maximum								
	Minimum								
	Difference								

Remarks:

Figure 8. Suggested Torquemeter Runout Data Sheet

NOTE

Vibration will be measured in mils and inches per second.

(4) Compressor vibration in mils/inches per second; record with a 150 Hz filter in pickup circuit.

(5) Turbine vibration in mils/inches per second; record with a 150 Hz and 15 Hz filter in pickup circuit.

(6) Reduction gearbox vibration in mils/inches per second; record with a 150 Hz filter in pickup circuit.

(7) CTMT °C.

(8) Main oil pressure, power section and reduction gear in pounds per square inch.

(9) Oil inlet temperature, power section and reduction gear in °C.

24. ENGINE MONITORING SYSTEM (EMS) FUNCTIONAL CHECK.

Support Equipment Required

Part No./Type Designation	Nomenclature
23032969	Maintenance terminal, handheld (HMT)

a. Perform the following check with the engine not running:

(1) Place EAU/DETC switch in EAU position.

(2) Connect the HMT to the EAU.

(3) Press the MENU key.

(4) The HMT will display the following parameters and their current values:

NOTE

This display will show parameters for the left & right engine. TPETS is wired such that the engine on test is the left.

Actual values may vary. The range shown is considered to be reasonable for the engine. Values will be positive when EAU is ON.

(a) RPM: 0

(b) CDP: Ambient or agree with PS7 and CIP within ±0.7 psia.

(c) HP: 0

(d) CDT: Ambient within ±5°C.

(e) CIT: Ambient within ±2°C.

(f) CIP: Ambient or agree with PS7 and CDP within ±0.7 psia.

(g) CTMT: Ambient within ±5°C.

(h) PS7: Ambient or agree with CDP and CIP within ±0.7 psia.

(i) PLA: Agree with TPETS within ±2°.

b. Repeat steps (1) through (4) at ground idle and check the following parameters:

(1) CDP: 120–180 psia (2.4–3.6 volts).

(2) CDT: 290 °C –360 °C (209–231 ohms).

(3) N1, N2: Agree with TPETS within ±30 RPM (±0.2%).

25. **ENGINE TESTING**.

26. DIGITAL ELECTRONIC TRIM CONTROL (DETC) TORQUE CALIBRATION.

Support Equipment Required

Part No./Type Designation	Nomenclature
HP–48GX	Calculator
23032969	Maintenance terminal, handheld (HMT)
23051184	Module, engine performance and minimum power calculator

a. Calibrate DETC to torquemeter.

(1) The DETC torque calibration shall be performed at normal ground idle (16° + 2°, – 1°) with the generator switch OFF.

(2) Connect HMT and clear all faults.

(3) Place EAU/DETC switch in DETC position.

(4) Press CAL.

(5) Press HP.

(6) Press ENTER.

(7) Using the +, –, and CHANGE INCREMENT keys, insert the correct torquemeter calibration number. After this number is entered, press ENTER, press ENTER again.

NOTE

The torquemeter calibration number may be obtained from the engine logbook or found etched on the torquemeter.

(8) Record torquemeter calibration number on appropriate data sheets.

(9) Press CAL LOCK to store the values in the DETC.

(10) Clear DETC faults.

b. Perform minimum power calculation using the HP–48GX and 23051184 module as follows:

NOTE

Winds must be 10 knots or less to perform minimum power calculation.

(1) Press the ON key to turn on calculator and start program.

(2) The start up screen will display C130, P3, E2C2, COMM, TEST, and QUIT.

Table 9. Test Run Schedule

	Time (min.)	RPM (±75) ***	HP	MAX CTMT (°C)
NOTE Actuate pilot record switch where indicated by the symbol (PR).				
1. Start engine and accelerate to Ground Idle				
2. Ground Idle (PR)	4			
3. 75% Max Cont	2	14,239	4123	865
4. Max Cont	2	14,239	5100	865
5. Decelerate to Flight Idle (34°)				
6. Flight Idle (34°) (PR)	2			
7. Accelerate to Max		**		
8. Max (PR)	2	14,239	5100	865
9. Decelerate to Flight Idle (34°)				
10. Flight Idle (34°)	1			
11. Accelerate to Max		**		
12. Max	1	14,239	5100	865
13. Max Reverse (PR)	1	*		865
14. Decelerate to Ground Idle				
15. Ground Idle	2			
16. Shutdown				
* Refer to table 3.				
** 96–108% rpm excursions acceptable during rpm transients.				
*** ±0.5% (±75 rpm) allowable fluctuation from average value.				

NOTE

The six white keys at the top of the calculator control all program options.

Pressing the white key below C130, P3, or E2C2 selects that aircraft. Pressing the white key below COMM selects commercial aircraft. Pressing the white key below TEST selects engine under test condition (test cell/TPETS). Pressing the white key below QUIT will turn the calculator off.

If a wrong value is entered, the DEL key can be used to back out of the entry.

The program can be exited at any time by pressing ENTER 1-4 times.

(3) Select the appropriate aircraft or TEST and press the key under that function. ENGP, MINP, and EXIT will appear.

(4) Select MINP.

(5) Enter ambient temperature in °C or °F and press ENTER.

(6) Enter 1 for Centigrade or 0 for Fahrenheit and press ENTER.

NOTE

If pressure altitude is below sea level enter the pressure altitude and then press the +/- key.

(7) Enter pressure altitude in FT or IN HG and press ENTER.

(8) Press 1 for feet or 0 for IN HG and ENTER.

(9) Enter engine speed in percent (%) RPM and press ENTER. Minimum power will be displayed.

NOTE

The Marconi indicator is not to be used for minimum horsepower calculation.

(10) Compare the calculated minimum power to the horsepower displayed on the HMT. If the difference is 10 HP or less, no adjustment is required however, ensure that the offset is between -2500 and -1500. Also, the OFFSET CAL shall have +/-500 in-lb CAL margin on either side of the calculated minimum power to allow for on-wing adjustments as per step (11)(b).

NOTE

Adjusting the DETC OFFSET CAL with the HMT may NOT reach the calculated min power target. The OFFSET CAL shall have +/-500 in-lb CAL margin on either side of the calculated min power target, allowing for on-wing DETC OFFSET CAL. If DETC OFFSET CAL fails to calibrate within the min power CAL margin (+/-500 in-lb), complete troubleshooting procedures for Engine Horsepower/Torque DETC Calibration OFFSET (WP 025 00) and SHP Component Checkout (WP 094 00).

(11) If the difference is greater than 10 HP, adjust the DETC OFFSET as per step (11)(a).

(a) Multiply the difference between the calculated minimum power and horsepower displayed on HMT by 4.43. This wil be the amount to change the DETC OFFSET.

NOTE

DETC OFFSET shall be between -2500 and -1500. Also, the OFFSET CAL shall have +/-500 in-lb CAL margin on either side of the calculated minimum power to allow for on-wing adjustment. If outside this range replace the torquemeter.

(b) On HMT, press CAL key, HP key, ENTER key, and ENTER key again. HMT readout will indicate:

OFFSET CAL - XXXX
CURR HP + XXX
INCR + 100
+ = UP - = DOWN

(c) To change offset calibration number (offset cal) by increments of 100, use + and - keys.

(d) To change offset calibration number (offset cal) by increments of 10, press CHANGE INCR key and use + and - keys.

(e) To change offset calibration number (offset cal) by increments of 1, press CHANGE INCR key and use + and - keys.

(f) If horsepower reading on HMT was greater than target minimum horsepower, change offset cal using - key.

(g) If horsepower reading on HMT was less than target minimum horsepower, change offset cal using + key.

(h) On HMT, press ENTER key. HMT readout will indicate CAL LOCK TO SAVE.

(i) On HMT, press CAL LOCK key.

(j) Note and record the new OFFSET CAL and margin on run.

c. Engine minimum power. Alternate method.

(1) Record ambient air temperature and true barometric pressure on appropriate data sheets.

(2) Adjust the power lever in the ground idle range until the minimum horsepower is found on the HMT.

(3) Record the horsepower and engine rpm on the data sheet.

(4) Read target minimum horsepower from figure 9 using recorded barometric pressure, ambient temperature, and engine rpm obtained at the minimum power point. Record on data sheet.

(5) Compare the minimum power from figure 9 to the horsepower displayed on the HMT. If the difference is 10 HP or less no adjustment is required however, ensure the OFFSET is between -2500 and -1500. Also, the OFFSET CAL shall have +/-500 in-lb CAL margin on either side of the calculated minimum power to allow for on-wing adjustments as per step (6)(b).

NOTE

Adjusting the DETC OFFSET CAL with the HMT may NOT reach the calculated min power target. The OFFSET CAL shall have +/-500 in-lb CAL margin on either side of the calculated min power target, allowing for on-wing DETC OFFSET CAL. If DETC OFFSET CAL fails to calibrate within the min power CAL margin (+/-500 in-lb), complete troubleshooting procedures for Engine Horsepower/Torque DETC Calibration OFFSET (WP 025 00) and SHP Component Checkout (WP 094 00).

(6) If the difference is greater than 10 HP, adjust the DETC OFFSET, step (6)(a).

(a) Multiply the difference between the minimum power (figure 9) and horsepower displayed on HMT by 4.43. This will be the amount to change the DETC OFFSET.

(b) On HMT, press CAL key, HP key, ENTER key, and ENTER key again. HMT readout will indicate:

OFFSET CAL - XXXX
CURR HP + XXX
INCR + 100
+ = UP - = DOWN

(c) To change offset calibration number (offset cal) by increments of 100, use + and - keys.

NOTE

DETC OFFSET shall be between -2500 and -1500. Also, the OFFSET CAL shall have +/-500 in-lb CAL margin on either side of the calculated minimum power to allow for on-wing adjustment. If outside this range replace the torquemeter.

(d) To change offset calibration number (offset cal) by increments of 10, press CHANGE INCR key and use + and - keys.

(e) To change offset calibration number (offset cal) by increments of 1, press CHANGE INCR key and use + and - keys.

(f) If horsepower reading on HMT was greater than target minimum horsepower, change offset cal using - key.

(g) If horsepower reading on HMT was less than target minimum horsepower, change offset cal using + key.

(h) On HMT, press ENTER key. HMT readout will indicate CAL LOCK TO SAVE.

(i) On HMT, press CAL LOCK key.

(j) Note and record the new OFFSET CAL.

27. ENGINE PERFORMANCE CALCULATION.

Support Equipment Required

Part No./Type Designation	Nomenclature
HP-48GX	Calculator
23032969	Maintenance terminal, handheld (HMT)
23051184	Module, engine performance and minimum power calculator

a. The criteria for use of calculator cannot be applied on an inspection time basis since engines vary due to compressor contamination, erosion, deterioration, etc.

b. The basis for use of calculator must be determined by local conditions and and experience gained from being familiar with engine and its characteristics.

NOTE

If HP-48GX percent reading exceeds 106%, determine cause and take corrective action. Check values of CIT, CIP, PS7 and TMT to isolate cause of excessively high performance.

TPETS performance must be read from calculator in percent. Calculator displays ACCEPT and REJECT are based on 95% aircraft minimum performance value and are valid for Organizational level only.

c. In order to arrive at a realistic figure to determine when an engine is sufficiently contaminated and thus requires a cleaning, a minimum standard required for field maintenance engines is 98 percent performance. Therefore, if engine performance is less than 98 percent determine cause and take corrective action.

d. Use following precautions and preparation when gathering data for use in engine performance calculation with the HP-48GX and 23051184 module:

(1) Make sure that no diffuser bleed air is in use.

(2) Hydraulic and electrical reduction gear loads do not affect results of these calculators.

(3) Measure compressor inlet temperature (CIT) using the HMT.

(4) Measure compressor inlet pressure (CIP) using the HMT.

(5) Measure exhaust static pressure (PS7) using the HMT.

(6) The indicated shaft horsepower reading is taken directly from the HMT.

(7) The DETC and Marconi horsepower indicator shall be calibrated before power calculations are made.

(8) Ensure average engine speed (propeller governing rpm) is within ± 0.2% of 100% (± 28 RPM of 14,239 rpm) using HMT N_2 value. A 0.5 percent error in rpm (71 rpm) will result in approximately one percent change in performance.

(9) For correct performance determination, the E2/C2 tailpipe shall be installed on the engine for TPETS operation.

CAUTION

Do not exceed maximum compensated turbine measured temperature (CTMT) of 865°C ± 10°C (1589°F ± 18°F) at full power.

e. Allow engine instruments to stabilize at 4600 HP before reading high power setting.

f. Press the ON key to turn on calculator and start program.

g. The start up screen will display C130, P3, E2C2, COMM, TEST, and QUIT.

NOTE

The six white keys at the top of the calculator control all program options.

Pressing the white key below C130, P3, or E2C2 selects that aircraft. Pressing the white key below COMM selects commercial aircraft. Pressing the white key below TEST selects engine under test condition (test cell/TPETS). Pressing the white key below QUIT will turn the calculator off.

If a wrong value is entered, the DEL key can be used to back out of the entry.

The program can be exited at any time by pressing ENTER 1-4 times.

h. Select the appropriate aircraft or TEST and press the key under that function. ENGP, MINP, and EXIT will appear.

i. Select ENGP.

j. Select engine type.

k. Enter CIP reading from HMT and press ENTER.

l. Enter CIT reading from HMT and press ENTER.

m. Enter PS7 reading from HMT and press ENTER.

n. Enter CTMT from HMT and press ENTER.

o. Enter HP reading from HMT and press ENTER.

NOTE

All entered perimeters will be displayed on the screen.

p. Engine performance will be displayed. Press any key to continue. Repeat steps k. through 0. for second engine.

q. Press the white key below EXIT twice.

r. Press the white key below QUIT to turn the calculator off.

28. MARCONI HORSEPOWER INDICATOR CALIBRATION PROCEDURE.

CAUTION

Repeated adjustment of the Marconi horsepower indicator will cause failure of the gage.

a. Verify DETC to torquemeter calibration. Refer to this WP.

USE OF NOMOGRAPH FOR MINIMUM TORQUE CALCULATION

1. DETERMINE OUTSIDE AIR TEMPERATURE AND MARK THAT VALUE ON THE OUTSIDE TEMPERATURE SCALE. THIS WILL BE POINT 1.

2. DETERMINE THE BAROMETRIC PRESSURE AND MARK THAT VALUE ON THE BAROMETRIC PRESSURE SCALE. THIS WILL BE POINT 2.

3. WITH A STRAIGHT EDGE, DRAW A LINE BETWEEN POINTS 1 AND 2.

4. POINT 3 IS LOCATED WHERE THE LINE DRAWN FROM POINT 1 TO POINT 2 INTERSECTS THE PIVOT LINE.

5. DETERMINE THE ENGINE SPEED (RPM/%) AND MARK THAT VALUE ON THE ENGINE SPEED SCALE. THIS WILL BE POINT 4 .

6. WITH A STRAIGHT EDGE, DRAW A LINE BETWEEN POINTS 3 AND 3.

7. HORSEPOWER WILL BE INDICATED AT POINT 5 WHERE THE LINE DRAWN FROM POINTS 3 AND 4 INTERSECTS THE HORSEPOWER LINE

NOTE: REFER TO THE HMT FOR HP. THE MARCONI INDICATORS ARE NOT CORRECT WHEN THE ENGINE IS OFF-SPEED (I.E. RPM OTHER THAN 100%).

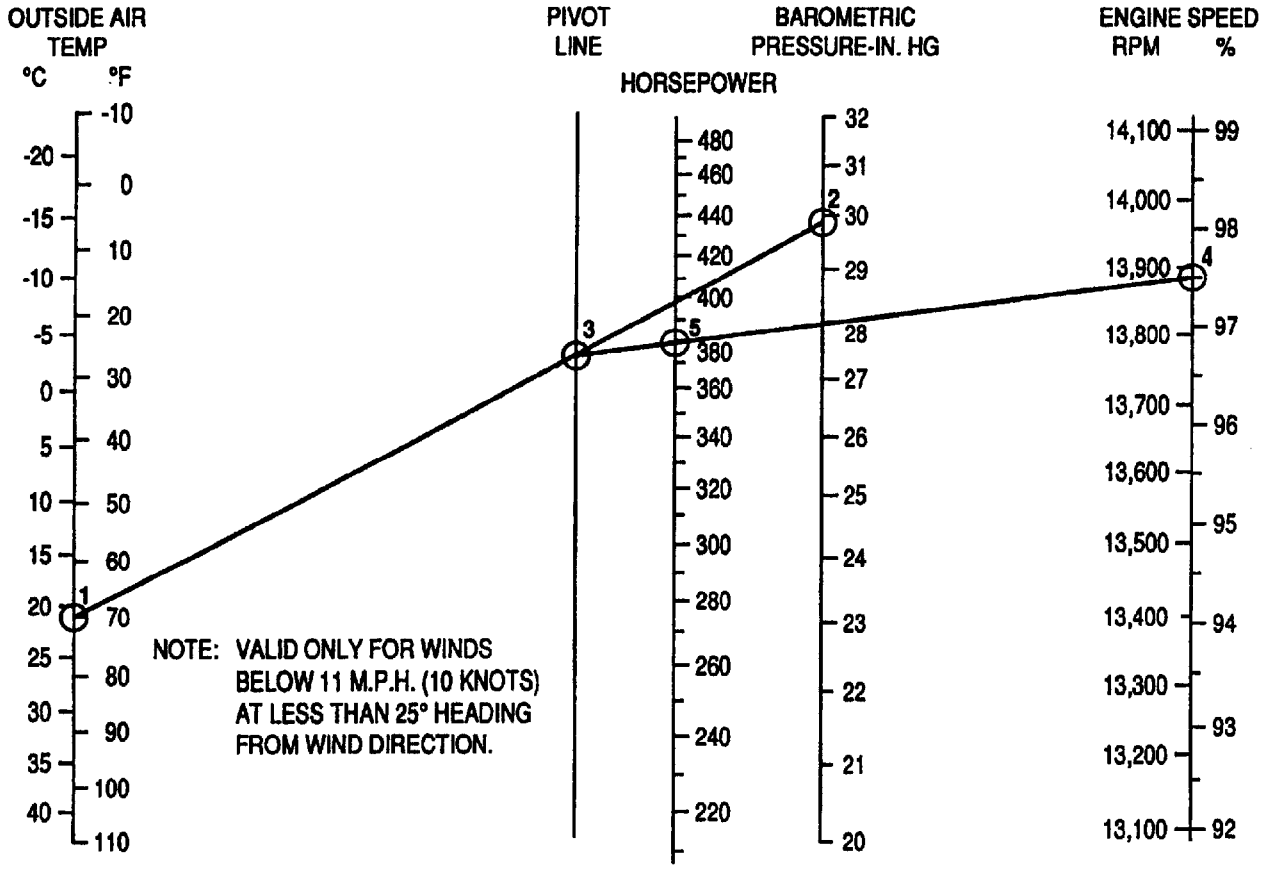

Figure 9. Minimum Horsepower Nomograph (Sheet 1 of 2)

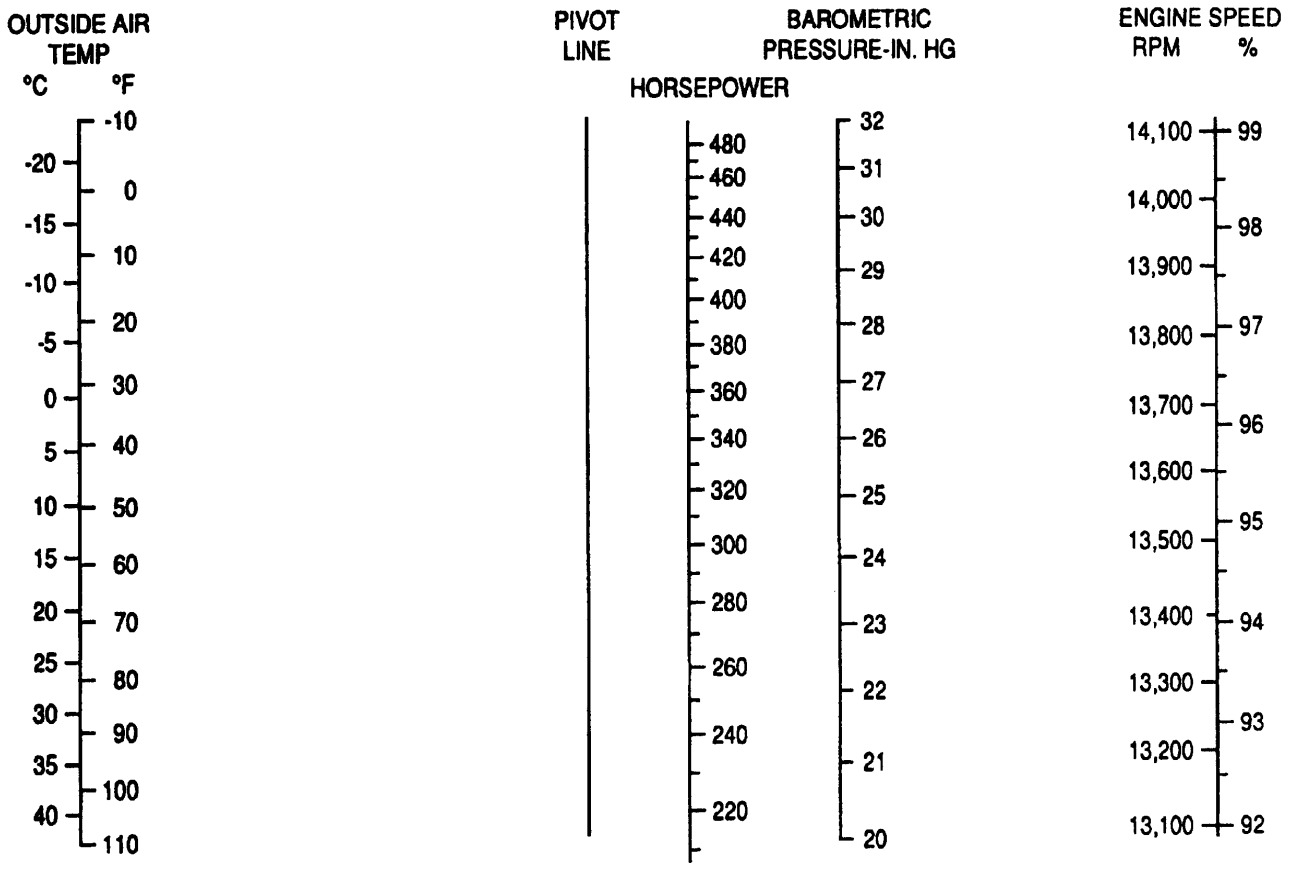

NOTE: VALID ONLY FOR WINDS BELOW 11 M.P.H. (10 KNOTS) AT LESS THAN 25° HEADING FROM WIND DIRECTION.

NOTE: REFER TO THE HMT FOR HP. THE MARCONI INDICATORS ARE NOT CORRECT WHEN THE ENGINE IS OFF-SPEED (I.E. RPM OTHER THAN 100%).

Figure 9. Minimum Horsepower Nomograph (Sheet 2 of 2)

b. Remove Marconi gage from instrument panel, but do not disconnect electrical plug.

c. Set switch on rear of indicator to ZERO and hold. Each digital display shall indicate –430.

NOTE

If –430 is indicated on each digital display, do not perform step d.

d. Adjust LEFT ZERO ADJUST and/or RIGHT ZERO ADJUST potentiometer to obtain –430 indication on each digital display.

e. Set switch to slope and hold. Each digital display shall indicate 5550.

NOTE

If 5550 is indicated on each digital display, do not perform step f.

f. Adjust LEFT SLOPE ADJUST and/or RIGHT SLOPE ADJUST potentiometer to obtain 5550 indication on each digital display.

g. Set switch on rear of indicator to ZERO and hold. Ensure each digital display indicates –430.

NOTE

If –430 is indicated on each digital display, do not perform step h.

h. Repeat steps e through h.

NOTE

Matching Marconi horsepower indicator to engine is not recommended, however, if the DETC horsepower function must be verified, proceed as follows.

29. **Matching Horsepower Indicator to Engine.**

NOTE

The Marconi horsepower indicator will only read true horsepower at 100% rpm. To get true horsepower multiply Marconi value by RPM and divide by 100. (ie. 430 ISHP x 98.5% ÷ 100% = 423.6 HP)

a. Obtain torquemeter calibration number from engine logbook or as stamped on torquemeter.

b. Divide torquemeter calibration number by 4.43 to obtain horsepower.
RECORD _____.

c. Multiply horsepower obtained in step b by 0.886 to obtain horsepower indicator span.
RECORD _____.

d. Subtract zero setting, 430, from span obtained in step c to obtain slope value (slope = span – 430).
RECORD _____.

e. Set switch on rear of indicator to SLOPE and adjust LEFT SLOPE ADJUST potentiometer to obtain slope calculated in step d.
RECORD _____.

f. If target minimum horsepower differs from indicated horsepower by more than 10 HP, adjust the Marconi gage as follows:

(1) On the rear of the indicator, adjust LEFT ZERO ADJUST potentiometer until digital display indicates within 10 HP of target minimum horsepower.

(2) On rear of indicator set switch to ZERO and record display indication.

(3) Set switch to SLOPE and record display indication.

(4) Add values in steps (2) and (3). Multiply this sum by 4.43 and then divide by 0.886 to obtain value with correct units..

(5) Determine numerical difference between value obtained in step (4) and torquemeter span calibration number. Absolute value of difference shall be less than 50 or DETC torque calibrations, this WP, must be repeated.

30. DIGITAL ELECTRONIC TRIM CONTROL (DETC) CHECK.

NOTE

Steps a and b apply only for CIT below 90°F.

a. With DETC/TD CONT switch in CONTROL mode, advance power lever angle from idle to 70°. Use the HMT to read power lever angle.

b. Read HP from the HMT. This value should be 3,393 ± 75 HP if inlet temperature is 90°F or below.

c. Advance power lever to 90° and record HP from the HMT. This value should be 5100 ± 75 HP. If HP is less than 5025, CTMT should be 1589° ± 5° F (865° ± 3° C). CTMT as read from the HMT shall agree with CTMT as read from the test stand indicator within ± 10° C.

d. Retard power lever to flight idle. Set DETC TD CONT switch to LIMIT.

e. Advance power lever to 90° and record HP from the HMT. This value should be 5100 ± 75 HP. If HP is less than 5025, CTMT should be 1589° ± 5° F (865° ± 3° C). CTMT as read from the HMT shall agree with CTMT as read from the test stand indicator within ± 10° C.

f. Max temperature check.

NOTE

Perform this check only if max temperature is not reached in steps c and e, above.

(1) Set PLA 34° flight idle.

(2) Set DETC /TD CONT switch to OFF.

(3) Set DETC TEMP CHECK switch to ON.

(4) Note amount of rise in temperature when DETC TEMP CHECK switch is ON.

(5) Allow CTMT to stabilize. Verify that CTMT does not exceed 800 ° C.

(6) Place DETC/TD CONT switch in CONTROL.

(7) Reset EAU flag.

NOTE

Following procedure may cause maintenance advisory flag to trip. Flag cannot be reset until a clear tape is installed.

(8) Advance power lever to 90°. CTMT should be 1589 ±5°F (865° ± 3°C). Read measured TMT from the HMT. This value should be 880° ±3°C. CTMT as read from the HMT shall agree with CTMT as read from the test stand indicator within ±10°C.

(9) Retard power lever to flight idle.

(10) Set DETC/TD CONT selector switch to LIMIT.

(11) Advance power lever to 90°. CTMT should be 1589°± 5°F (865°±3°C). Read measured TMT from the HMT. This value should be 880°±3°C. CTMT as read from the HMT shall agree with CTMT as read from the test stand indicator within ±10°C.

(12) Retard power lever to flight idle.

(13) Switch DETC/TD CONT switch to OFF.

(14) Set DETC TEMP CHECK switch to OFF.

(15) Set DETC/TD CONT switch to CONTROL.

(16) Read faults using HMT.

NOTE

Flag cannot be reset until a clear tape is installed.

(17) Clear faults.

31. FUEL CONTROL GOVERNOR CHECK.

Materials Required

Specification No./Part No.	Nomenclature
MS20995C32	Lockwire

a. The fuel governor should be checked on a newly installed fuel control to assure operation is within limits.

CAUTION

Engine operation in the overspeed fuel governing RPM range should be minimized.

b. For Hamilton Standard propeller model 54460–1, place sync power switch to ON position.

c. Make a normal start and accelerate to ground idle.

d. Advance power lever to 34° flight idle.

NOTE

When DETC TD CONT switch is OFF, all DEC readings must be taken from TPETS gages. The HMT will not display RPM, HP, CIT, CIP, TMT, PS7 or PLA.

Table 10. Fuel Control Governor Limits

Fuel Flow (PPH)	Minimum RPM	RPM (%)	Maximum RPM	RPM (%)
2750	14,838	104.21	14,998	105.33
2700	14,847	104.27	15,007	105.39
2650	14,856	104.33	15,016	105.46
2600	14,865	104.40	15,025	105.52
2550	14,874	104.46	15,034	105.58
2500	14,883	104.52	15,043	105.65
2450	14,892	104.59	15,052	105.71
2400	14,901	104.65	15,061	105.77
2350	14,911	104.72	15,071	105.84
2300	14,920	104.78	15,080	105.90
2250	14,929	104.85	15,089	105.97
2200	14,938	104.90	15,098	106.03
2150	14,947	104.97	15,107	106.10
2100	14,956	105.04	15,116	106.16
2050	14,965	105.10	15,125	106.22
2000	14,974	105.16	15,134	106.29
1950	14,984	105.23	15,144	106.36
1900	14,993	105.30	15,153	106.42
1850	15,002	105.36	15,162	106.48
1800	15,011	105.42	15,171	106.55
1750	15,020	105.48	15,180	106.61
1700	15,029	105.55	15,189	106.67
1650	15,038	105.61	15,198	106.74
1600	15,047	105.67	15,207	106.80
1550	15,057	105.74	15,217	106.87
1500	15,066	105.81	15,226	106.93
1450	15,075	105.87	15,235	106.99
1400	15,084	105.93	15,244	107.06
1350	15,093	106.00	15,253	107.12
1300	15,102	106.06	15,262	107.18
1250	15,111	106.12	15,271	107.25
1200	15,120	106.19	15,280	107.31
1150	15,130	106.26	15,290	107.38
1100	15,139	106.32	15,299	107.44
1050	15,148	106.38	15,308	107.51
1000	15,157	106.45	15,317	107.57

Table 10. Fuel Control Governor Limits (cont)

Fuel Flow (PPH)	Minimum RPM	RPM (%)	Maximum RPM	RPM (%)
950	15,166	106.51	15,326	107.63
900	15,175	106.57	15,335	107.70
850	15,184	106.64	15,344	107.76
800	15,193	106.70	15,353	107.82
750	15,203	106.77	15,363	107.89
700	15,212	106.83	15,372	107.96
650	15,221	106.90	15,381	108.02
600	15,230	106.96	15,390	108.08

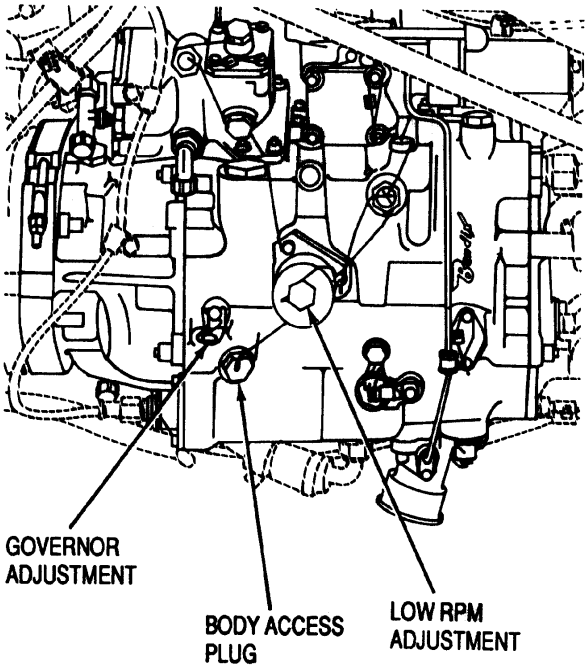

Figure 10. Fuel Control Adjustments

e. Place DETC/TD CONT switch in OFF.

f. Place fuel governor check switch in CHECK position.

g. Slowly advance power lever to MAX and observe that engine speed and fuel flow are within limits of Table 10.

CAUTION

Do not switch fuel governor check switch back to normal at high power lever settings or the engine torque limit may be exceeded.

h. Retard power lever to minimum power at 100% (14,239 rpm) and place fuel governor check switch to NORMAL position.

i. Place DETC/TD CONT switch in CONTROL.

j. Advance power lever to a higher setting to ensure the propeller is out of pitchlock.

k. As power lever is advanced, horsepower should increase and rpm should remain nearly constant. This indicates that the prop pitchlock mechanism has released.

l. If fuel control did not govern within limits as specified in table 10, make a governor adjustment as follows: (See figure 10.)

WARNING

Do not remove locking screw control body under any circumstances. If screw is removed and boost pumps are operating, it can result in blowing out the fuel governor adjustment shaft, causing a serious fuel leak and possible personal injury.

(1) Loosen lockscrew and remove governor adjustment shaft locking bracket.

(2) Adjust the shaft as required.

(3) Reinstall locking bracket and tighten locking screw.

NOTE

One 360° turn of fuel control governor adjustment will change engine speed approximately 70 rpm. (Counter clockwise will increase.)

(4) After final adjustment, secure shaft and locking bracket with MS20995C32 lockwire. (QA)

32. REVERSE THRUST OPERATIONAL CHECK.

CAUTION

Engine operation in the overspeed reverse governing RPM range should be minimized.

a. With the power lever at the FLIGHT IDLE (34°) position and propeller adjusted to obtain maximum negative blade angle, retard power lever to 0° position to obtain maximum reverse thrust.

b. Engine speed fluctuation shall not exceed 100 rpm.

c. Indicated turbine compensated measured temperature must not exceed 538°C (1000°F).

d. Outside air temperature (OAT) and engine speed shall be within limits of table 11.

Table 11. Speed During Reverse Thrust Operation

OAT (Free Air) (°C)	(°F)	RPM Range	OAT (Free Air) (°C)	(°F)	RPM Range
–32	–30	14,625–15,075	16	60	14,390–15,370
–28	–20	14,625–15,075	22	70	14,385–15,378
–24	–10	14,625–14,080	26	80	14,260–15,320
–18	0	14,625–14,080	32	90	14,110–15,200
–12	10	14,610–15,110	38	100	13,900–15,020
–6	20	14,560–15,160	44	110	13,830–14,970
–1	30	14,555–15,165	49	120	13,800–14,965
5	40	14,470–15,270	54	130	13,740–14,945
10	50	14,420–15,320	60	140	13,720–14,940

33. MECHANICAL FUEL SHUTOFF CHECK.

a. Retard Power lever to start position and move MECH S D switch to MECH position.

CAUTION

Monitor the TMT signal carefully during engine shutdown for overtemperature condition.

b. Shutdown engine by moving condition level slowly toward full feather position. Fuel shutoff will occur mechanically (electrically disarmed by MECH S D switch) if condition lever has been properly rigged.

c. Note whether the fuel control mechanical valve closes satisfactorily.

d. Move MECH S D switch to NORMAL as soon as engine shutdown occurs.

e. Immediately after shutdown, return all applicable switches to the OFF or NORMAL positions. Move power lever to 16° + 2° /– 1° position and return propeller blades to start position with unfeather switch.

34. OPERATION WITHOUT PROPELLER.

CAUTION

Engine may be operated without a propeller, including fuel control governor check, for a maximum of 30 minutes.

Prop must be installed for DETC check.

Do not exceed fuel control maximum governing speed (108%).

Operation in excess of 100% RPM is not to exceed one minute.

Do not exceed oil temperature limits.

NOTE

Operation without propeller may cause excessive vapor from vents.

a. Operation of engine without a propeller is permissible to check for fuel or oil leaks.

35. REDUCTION GEAR ASSEMBLY (RGA) RUN–IN PROCEDURE.

NOTE

Reduction Gear Assembly must be carefully monitored during all starts, accelerations, and stabilized running. If at any time vibration exceeds 3 mils, immediately reduce power and shut down engine.

Vibration should be checked at Low Speed ground Idle, High Speed Ground Idle, Flight Idle, 700°C TMT and 825°C TMT settings. This procedure can be run in conjunction with engine test run.

a. Set controls for normal start.

b. Start engine and allow to accelerate to low speed ground idle (LSGI). Check vibration and record reading on engine testing data sheet.

c. Using the reset switch, accelerate to high speed ground idle (HSGI), and run five minutes. Check vibration and record reading on engine testing data sheet.

NOTE

Ensure oil temperature is 40°C and rising prior to advancing power lever.

d. Advance power lever slowly to FLIGHT IDLE and run five minutes. Check vibration and record readings on engine testing data sheet.

e. Advance power lever slowly to 700°C TMT and run fourteen minutes.

f. Advance power lever to 825° C TMT and run for one minute. Check vibration and record reading on engine testing data sheet.

g. Retard power lever until HSGI (START position) is obtained. Run five minutes.

h. Advance power lever slowly to FLIGHT IDLE and run five minutes.

i. Advance power lever slowly to 700°C TMT and run for five minutes.

j. Retard power lever until HSGI (START position) is obtained. Run three minutes.

k. Using the reset switch, decelerate engine to LSGI and run two minutes.

l. Shutdown engine.

NOTE

Forty–five minute run–in without metal detection is required.

m. Remove and inspect RGA magnetic drain plug for metal.

n. Remove and inspect RGA oil filter for metal. If fuzz or minor metal flakes (not rejection criteria) are detected on the RGA magnetic drain plug or in filter, repeat steps a through n until no metal is detected or rejection criteria is found.

o. Install RGA magnetic drain plug.

p. Install RGA oil filter.

36. COMPRESSOR AND TURBINE SEAL BREAK–IN.

a. A seal break–in must be run during first fire–up if any of the following conditions exist.

(1) Compressor cases and rotor replaced.

(2) Compressor air inlet housing or diffuser replaced.

37. SEAL BREAK–IN RUN.

CAUTION

Compressor and turbine vibration must be carefully observed during all starts, accelerations, and stabilized running performed in accordance with the seal break–in procedure. If at any time compressor vibration exceeds 2.0 MILS, or turbine vibration with the 150 Hz filter installed exceeds 4.0 mils, immediately reduce power to next lower setting. If excessive vibration is present at LOW RPM, engine should be shut down.

CAUTION

If a power section lock–up is noted at any time during seal break–in or any other portion of the test, the engine shall be allowed to cool until such time as the power section rotates freely without evidence of excessive scraping or drag.

DETC/TD CONT switch shall be in CONTROL or LIMIT mode for the entire seal break–in schedule.

NOTE

TPETS turbine temperature gauge is labeled TIT (turbine inlet temperature). When running engine, gauge indicates CTMT (compensated turbine measured temperature).

a. Motor engine to maximum rpm attainable with starter used, then immediately de–energize starter and allow engine to coast to a complete stop.

b. During coastdown, listen for excessive scraping or rubbing noises.

c. If these occur, repeat motoring operation up to 3 times if necessary. If noises still are heard, investigate cause.

d. Start engine and allow it to accelerate to 42% (6000 rpm), then cut the fuel and allow engine to coast to a complete stop.

e. Start engine and allow it to accelerate to 56% (8000 rpm), then cut the fuel and allow engine to coast to a complete stop.

f. Depress PUSH FOR SEAL BREAK IN button (low rpm solenoid energized).

g. Start engine and allow it to accelerate to low speed idle 71.6 (10,200 rpm). Run at this setting for one minute, then cut the fuel and allow engine to coast to a complete stop.

h. Start engine and allow it to accelerate to 71.6% (10,200 rpm) and run at this setting for two (2) minutes.

i. Pull out PUSH FOR SEAL BREAK IN button. Allow engine to accelerate to 84% (12,000 rpm) and return immediately to 71.6% (10,200 rpm) again depressing PUSH FOR SEAL BREAK IN button.

j. Run at 71.6% (10,200 rpm) for three (3) minutes.

k. Accelerate to 89% (12,800 rpm), then return immediately to low speed idle.

l. Run at low speed idle for three (3) minutes.

m. Accelerate to GROUND IDLE 97% (13,800 rpm).

n. Run two (2) minutes at this setting.

o. Slowly accelerate to 100% (14,239 rpm), minimum CTMT for one (1) minute, then return to idle for three (3) minutes.

p. Slowly accelerate to 100% (14,239 rpm) and 1100°F (594°C) CTMT for one (1) minute, then return to idle for three (3) minutes.

q. Slowly accelerate to 100% (14,239 rpm) and 1300°F (705°C) CTMT for one (1) minute, then return to idle for three (3) minutes.

r. Slowly accelerate to 100% (14,239 rpm) and 1500°F (816°C) CTMT or torque limit for one (1) minute, then return to idle for three (3) minutes.

s. Slowly accelerate to 100% (14,239 rpm) and 1589°F (865.5°C) CTMT, or torque limit, for one (1) minute, then return to idle for three (3) minutes. (Use anti–ice to obtain higher TMT if necessary).

t. Repeat step s.

u. Slowly accelerate to 100% (14,239 rpm) and 1589°F (865.5°C) CTMT, or torque limit, for five (5) minutes. Return to idle and proceed with adjustments and checks. (Use anti–ice to obtain higher TMT, if necessary).

38. POWER SECTION OIL PRESSURE ADJUSTMENT.

Support Equipment Required

Part No./Type Designation	Nomenclature
–––	Wrench, torque (0–300 lb in.)

Materials Required

Specification No./Part No.	Nomenclature
MS20995C32	Lockwire

NOTE

If regulating valve does not maintain 50–60 psig pressure at 50°–90°C oil inlet temperature at 100% rpm, shut down and make an adjustment. This procedure should be followed until the required pressure is reached. One revolution of adjustment plug changes oil pressure by approximately three psig.

a. Remove oil pressure relief valve cap.

b. Remove adjusting plug lock.

c. Turn adjusting plug, clockwise to increase, counterclockwise to decrease pressure.

d. Reinstall adjusting plug lock.

e. Reinstall oil pressure relief valve cap. Torque valve cap 180 to 220–lb in. and secure with MS20995C32 lockwire. (QA)

39. REDUCTION GEAR OIL PRESSURE ADJUSTMENT. (See figure 11.)

Support Equipment Required

Part No./Type Designation	Nomenclature
6798131	Wrench, spanner
–––	Wrench, torque (0–600 lb in.)
–––	Wrench, torque (0–100 lb in.)

Materials Required

Specification No./Part No.	Nomenclature
AS3085–006	Packing, preformed (1)
MS20995C20	Lockwire

a. A normal setting of 180 psig is intended for the initial pressure setting on new and zero timed reduction gears. Pressure on replacement pumps should be set to the level of the pump being replaced or the nominal setting of 180 psig, whichever is greater. If oil pressure decreases below 170 psig at normal operating oil temperature and engine rpm, increase pressure until 180± 10 psig can be maintained. This adjustment should be made when practical, not to interfere with operations. If the operating pressure of 180±10 psig cannot be maintained, no further action is required as long as the reduction gear oil pressure operating limits (150–250 psig) are maintained.

CAUTION

After initial setting, movement of the adjusting shaft in a decrease pressure direction is strictly prohibited. If a reduction gear has a history of steadily increasing oil pressure, it is indicative of impending reduction gear failure.

b. When the 250 psig limit is exceeded under normal operating conditions, return the reduction gear to overhaul.

c. Excessive oil pressure may also be caused by clogging of bleed hole in end of pressure adjusting valve shaft. In this case, remove valve shaft (2, figure 11), bushing (1), lock (3) and nut (4) as a unit with 6798131 spanner wrench without changing valve setting.

d. Clean bleed hole, reinstall unit with new preformed packing, and torque bushing 300 – 500 lb in. Lockwire bushing to lug with MS20995C20 wire. (QA)

e. Start engine and run at 100 percent rpm until the reduction gear oil temperature has stabilized between 80° to 85°C (175° to 185°F).

f. Observe reduction gear oil pressure. If the oil pressure is below 180 psig nominal, shut down engine.

g. Remove the nut (4) at the rear of pump.

h. Pull off the adjusting valve lock (1).

i. Adjust the pressure adjusting valve shaft (2) with a screwdriver. Turn in a clockwise direction to increase pressure. Make the first adjustment one full turn.

j. Install the adjustment valve lock.

k. Install the nut and torque 70 – 85 lb–in. (QA)

l. Repeat the above steps until 180 psig (as close as adjustment will allow) is obtained.

m. Lockwire nut to bushing with MS20995C20 wire. (QA)

40. FINAL CONTROL CHECK. Stabilized ground idle rpm must be 13,900 ± 200.

41. SHUTDOWN AND NEGATIVE TORQUE SYSTEM CHECK.

a. Move power lever to minimum torque position.

b. Hold NTS check switch in CHECK position.

c. Shut down by retarding the condition lever until the GROUND STOP light comes on.

d. This energizes the fuel control shutoff valve to closed position shutting off fuel to stop engine.

e. As engine slows down, the NTS check light should come on, indicating that the NTS system has operated.

f. Release NTS check switch to NORMAL position.

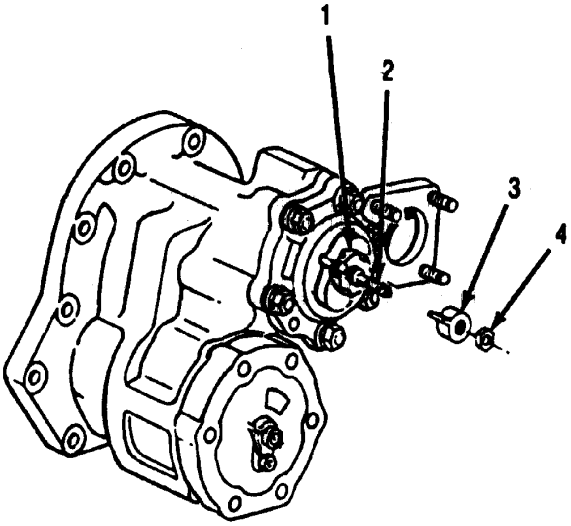

1. Flanged Bushing
2. Pressure Adjusting Valve Shaft
3. Pressure Adjusting Valve Lock
4. Hex Head Nut

Figure 11. Reduction Gear Oil Pump

NOTE

Inability to obtain a satisfactory NTS test on shut down is not necessarily an indication of improper NTS functioning, The differential torque generated may not be sufficient to move the NTS plunger out; for example, blades not at minimum torque position.

g. Make a visual inspection for fuel and oil leaks or other malfunctions.

42. AUTO FEATHER (LIGHT) CHECK.

a. Auto feather thrust light is on before engine start.

b. The light should be off during normal engine operation.

NOTE

Light ON indicates that the thrust sensitive system has operated properly. Thrust sensitive system operates when propeller is delivering less than 500 pounds forward thrust.

c. Light should be on after engine shutdown and during reverse thrust operation.

43. **INSPECTION AFTER TEST**.

44. MAGNETIC PLUGS.

45. Removal, Inspection, Cleaning and Installation.. Refer to WP 072 00 and 073 00.

46. VISUAL INSPECTION FOR OIL AND FUEL LEAKS.

47. Reduction Gear Oil Leakage.

a. Maximum leakage from each of the following locations is two CC per hour.

(1) Starter.

(2) Alternator.

(3) Spare pad or generator.

(4) NTS plunger.

b. Replace the propeller shaft seal anytime the propeller is removed and there is evidence, regardless of amount of oil leakage from seal.

48. Power Section Oil Leakage.

a. Vapor or oil mist, emanating from diffuser vents during start and shutdown, is acceptable providing the following oil consumption limits are not exceeded.

b. Maximum leakage from each of the following locations is 2.0 cc per hour.

(1) Fuel Pump.

(2) Fuel Control.

(3) Speed Sensitive Control.

(4) Speed Sensitive Valve.

c. Replace seals when leakage is excessive.

d. Oil leakage into air inlet housing is not permitted.

49. PENALTY CHECK RUN OF ENGINE.

Materials Required

Specification No./Part No.	Nomenclature
MIL–PRF–23699	Oil, engine

a. If, in the opinion of cognizant personnel, the accumulation of metal particles is readily identified as unsatisfactory in accordance with inspection criteria of preceding paragraphs, no further inspection is required and the affected unit should be changed. When metal fragments cannot be identified as specific engine parts and magnetic plug accumulation does not fall within the rejection criteria of preceding paragraphs but is questioned as to continued operational acceptability, proceed as follows:

NOTE

Retain removed material from magnetic plugs and filters in suitable containers for further inspection at repair activity should the engine be rejected.

(1) (Applicable to engines with serviceable scavenge oil filter.) Remove, inspect and clean all power section and reduction gear magnetic plugs. Remove, inspect and replace scavenge oil filter element. If there is no indication (pop out button on oil filter popped out) of scavenge oil filter by passing, steps (2) and (3) may be eliminated.

(2) Drain engine oil from oil tank, tank sump, engine power section accessory drives housing, reduction gear low point drain plugs and accessible QEC unit drains. (Ensure complete drainage.)

(3) Remove, inspect, and clean or replace all power section and reduction gear magnetic plugs and oil filters.

(4) Flush reduction gear. Refer to WP 025 00.

(5) Install all drain plugs and filters. Service oil tank as necessary. Ensure oil supply to the engine is established and air is purged.

(6) Ground run engine at Ground and/or Flight Idle power until oil temperature exceeds 40° degrees C.

(7) Operate engine in 10 minute increments with HP at 1500, 3000 and 4500 HP. Shut down engine.

(8) Inspect all magnetic plugs for any accumulation of metal following the penalty run. Evaluate any accumulation per Magnetic Plugs Inspection, this WP.

(9) If metal accumulation is of small quantity and acceptable as per inspection, clean magnetic drain plugs and repeat the “penalty run.”

(10) If engine continues to generate metal on second check run, this is considered to be excessive and unit should be rejected.

(11) If plugs are clean following second check run, engine shall be deemed serviceable and may be returned to service.

50. ENGINE MONITORING SYSTEM (EMS) TAPE ANALYSIS.

Support Equipment Required

Part No./Type Designation	Nomenclature
23008695	EMS Ground Station

a. Following all engine running, remove tape transport cartridge (TTC) from the engine analyzer unit (EAU) and analyze on 23008695 EMS Ground Station.

b. Following analysis, erase the tape and return it to the TPETS.

c. Analyze ground station reports for exceedances and take appropriate maintenance actions.

51. BORESCOPE INSPECTION OF TURBINE FIRST STAGE VANES AND BLADES USING THE BORESCOPE, P/N 2002AS100–1 OR 6798917.

NOTE

When available, flexible videoprobe with defect measuring system, P/N PXLM–620ASYS or equivalent, may be used in place of flexible borescope, P/N 2002AS100–1, and rigid borescope, P/N 6798917, (paragraph 52).

CAUTION

The Flexible Videoprobe with Defect Measuring System, P/N PXLM620ASYS or equivalent, shall be used only if operator has received proper training, refer to the Videoprobe Users Manual (P/N PXA102F) supplied in the Videoprobe carrying case for proper use, including setup, handling and care, cleaning, viewing and measuring. Videoprobe contains very precise instruments that are delicate. Handle all parts with care and return to case when not in use. Measurement tips (P/N XTM650FG and XTM650SG) shall only be used when taking a measurement is required and shall not be used for general viewing or inspection. Viewing tips (P/N XT650FF, PXT6100FG, or PXT6100SG) shall be used for general viewing or inspection.

Support Equipment Required

Part No./Type Designation	Nomenclature
Alternate 2002AS100-1	Flexible Borescope
Alternate 2004AS100-1	Fiber Optic Light Source
6798917	Borescope
-----	Wrench, torque (0-150 lb-in.)

Materials Required

Specification No./Part No.	Nomenclature
23072830	Seal, borescope plug metallic (6)

a. The 6798917 or 2002AS100-1 and 2004AS100-1 borescope is used primarily to inspect turbine first stage vanes and blades. It is used to inspect for sulfidation or any other damage to turbine first stage parts. This borescope was designed for mobility and easier operation while viewing through inspection ports. Magnification of the object viewed will be increased to the approximate powers listed below:

Swivel Probe to Object Distance in Inches	Magnifying Power
1.5	1X
1	1.25X
0.75	1.5X
0.5	3X
0.25	6X
0	11X

NOTE

If distance to object to be viewed is not known, a comparison can be made by introducing next to that object one of known size.

b. The 6798917 borescope is described as follows: (See figure 12.)

(1) The transformer (1) operates on 110-120 volts, single phase 50-400 cycle current. It has a controlled output of 0.7.5 volts. A converter (-700) is included for use with 220 volt power supply.

(2) The battery pack (2) can be used as a portable power source when necessary.

(3) The eye piece (3) incorporates a focus control (4). It attaches to the removable section (5) or directly to the rotation head assembly (6).

(4) The removable section (5) may be removed when necessary to facilitate viewing through thermocouple holes at more difficult locations.

(5) The 360° rotation head assembly (6) includes the swivel probe (7) which can also be rotated 360°. The scope light connectors (8) attach to the plug on the rotation head.

NOTE

When set screw that locks scope lamp retainer in place on some scopes must be screwed in toward center of retainer until it clears ID of swivel probe before lamp retainer can be removed. (See figure 13.)

(6) To replace scope lamp, remove lamp retainer from swivel probe. Install spare lamp (9, figure 12) and reinstall lamp retainer.

c. Inspect turbine first stage vanes and blades for sulfidation or any other damage as follows:

(1) Remove borescope plugs from each combustion liner.

(2) Connect transformer to a 110-120 volt, 50-400 cycle current outlet. Converter -700 may be used with 220 volt power supply. Connect transformer conducting cord to connector on borescope. If battery pack is used, connect battery pack conducting cord to connector on borescope.

(3) Insert swivel probe through borescope port and turn swivel to view toward rear of engine. Adjust light to desired intensity and inspect first stage vanes and blades.

(4) Any sulfidation evidence of splitting, delamination, separating, flaking or loss of material in any area of vanes or blades is not allowed. (Refer to WP 054 00.)

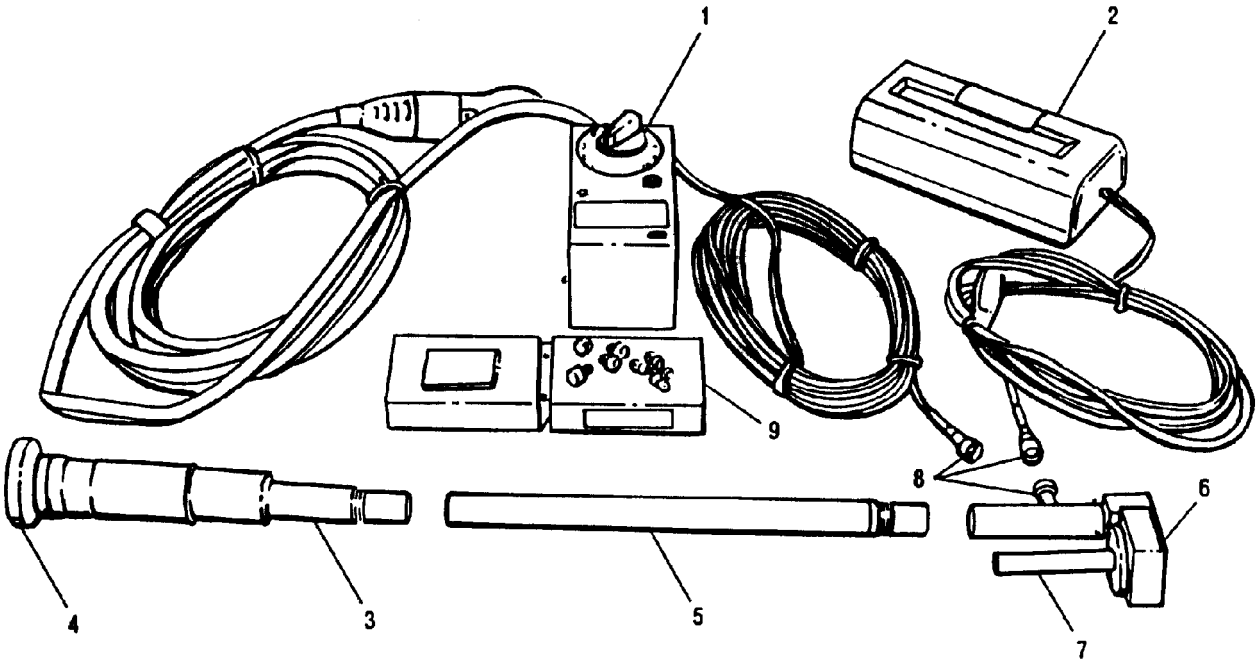

1. Transformer
2. Battery Pack
3. Eye Piece
4. Focus Control
5. Removable Section
6. Rotating Head
7. Swivel Probe
8. Scope Lamp Electrical Connectors
9. Spare Lamps

Figure 12. Borescope 6798917

(5) Turbine blades:

(a) Chips, pits and spits are permitted in the coating.

(b) No evidence of a crack is allowed.

(c) No nicks or cuts exposing parent metal are allowed.

(6) Turbine vanes:

(a) Axial cracks up to 0.250 in. are permitted.

(b) Cracks must be separated by a distance equal to the longer of the two cracks.

(c) Cracks must be of sufficient tightness so that the internal airfoil surface is not visible.

(d) Nicks and dents are allowed.

(e) Outer band cracks are permitted up to 0.500 in. long.

(f) Chips, pits and spits are permitted in the coating.

(7) Reinstall borescope plugs as follows:

CAUTION

Ensure borescope ports and combustion liner gromments are aligned to allow easy installation of borescope plugs. Do not force borescope plugs into ports.

Note

Metallic seals are reusable, do not discard unless there is evidence of damage.

(a) Install borescope metallic seals, P/N 23072830, into borescope plugs, P/N 23075081.

Anti-seize Compound (Never Seez) NS165 32

(b) Apply NS-165, Anti-seez compound to borescope plug stud threads.

(c) Verify combustion liner grommet is aligned to allow unobstructed installation (Figure 22). A locally manufactured alignment tool (Figure 23) or awl or equivalent will aid in aligning the floating grommet. Install borescope plug and metallic seal into turbine inlet case by hand, ensureing borescope plug sits flush on turbine inlet case. A significant gap (~ 0.100") indicates a possible interference between the borescope plug and the combustion liner grommet (Figure 24). Install new nuts. Torque nuts initially to 10-15 lb-in, then torque nuts in 5 lb-in increments (while alternating between nuts) until a final torque of 25-30 lb-in is reached. (**QA**)

d. Inspect all lines, harnesses, cables, clamps, components, etc. for leakage, installation security, etc., after test.

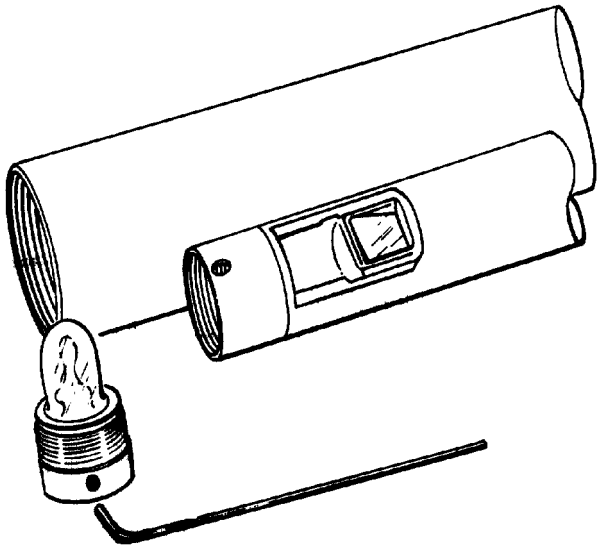

Figure 13. Replacing Borescope Lamp

52. INSPECTION OF TURBINE FIRST STAGE VANES AND BLADES USING FLEXIBLE VIDEOPROBE WITH DEFECT MEASURING SYSTEM, P/N PXLM620ASYS OR EQUIVALENT.

CAUTION

The flexible videoprobe with defect measuring system, P/N PXLM620ASYS or equivalent, shall only be used if the operator has received proper training. Videoprobe contains very precise instruments that are delicate. Handle all parts with care and return to case when not in use.

Support Equipment Required

Part No./Type Designation	Nomenclature
PXLM620ASYS or equivalent	Videoprobe, Flexible, with Defect Measuring System
PXA102F	Videoprobe XL Pro User's Manual
XA207S-C-XL or equivalent	Battery Pack
PXA560 or equivalent	Accessory Kit
-----	Wrench, torque (0-150 lb-in.)

Materials Required

Specification No./Part No.	Nomenclature
MIL-C-24671	Cloth, Lint-free
MS20995NC20	Lockwire
NS165	Compound, Anti-seize
VV-P-216	Penetrating Oil
23009249	Nut, Self-locking Hex, Flanged (12)
23072830	Seal, Borescope Plug Metallic (6)

NOTE

Observe the general handling/operating procedures contained in the Videoprobe's User's Manual.

a. The flexible videoprobe with defect measuring system, P/N PXLM620ASYS or equivalent, is used primarily to inspect turbine first stage vanes and blades. The videoprobe is used to inspect for sulfidation or any other damage to turbine first stage parts. This videoprobe was designed for mobility and easier operation while viewing through inspection ports, and allows for 1.5X to 3.0X magnification to facilitate accurate close-up inspections. The defect measuring system allows the user to take point-to-point, point-to-line, and multi-point measurements.

NOTE

The accuracy of the measurements taken with the flexible videoprobe with defect measuring system is dependent on the skill of the operator to capture a quality image and accurately place measurement cursors. Measurement accuracy tests should be performed before and after each measurement is taken to verify the accuracy of the measuring system. Measurement tips (P/N XTM650FG and XTM650SG) shall only be used when measurements are required and shall not be used for general viewing or inspection. Instead, viewing tips (P/N XT650FF, PXT6100FG, or PXT6100SG) shall be used for general viewing or inspection purposes.

b. Prepare flexible videoprobe with defect measuring system for operation as follows:

WARNING

Electrical Shock Hazard

Probe is grounded. Do not allow insertion tube or probe tip section to come into contact with a source of electrical current/voltage. Allowing such contact may result in personal injury or permanent damage to the videoprobe or engine parts.

Persons working on line electrical systems shall have proper training before doing so. Use proper personal protective equipment.

Use care when applying input power and when measuring voltage. Dangerous or possibly fatal voltage may be present.

CAUTION

Prior to inspection of internal engine components, caution shall be exercised to avoid engine rotation. Foreign object damage (FOD) to engine will occur if engine rotates while inspection instruments are in use. Take all necessary precautions to prevent accidental engine rotation. Ensure all nearby maintenance personnel are aware that internal engine inspection is taking place so that no engine component is rotated. Ensure that wind cannot rotate the propeller, if installed.

The videoprobe has an operating limit of 176°F (80°C). Allow a minimum of four hours from engine shutdown for engine to adequately cool before inserting videoprobe. The turbine inlet case and turbine vane case must be cool to the touch before performing internal engine inspection.

Note

Borescope plug metallic seals are reusable, do not discard unless there is evidence of damage.

(1) Remove borescope plugs from the turbine inlet case.

(2) Connect the AC power cord from the Processor/Light Source (PLS) (1, figure 15) to a 110 V or 220 V AC outlet. If the battery pack is to be used, remove the PLS from the case and disconnect the AC power cord. Connect the DC cable from a Battery Pack, P/N XA207S-XL or equivalent, to the DC power input (5, figure 15) on the rear panel of the PLS. See the Videoprobe's User's Manual for proper use of DC power with the videoprobe.

(3) Set brightness control knob (12, figure 16) on PLS to "auto" position.

(4) Remove handpiece from case and ensure power plug (13, figure 17) is connected to power plug receptacle (9, figure 16) at front of PLS.

(5) Turn system power on at power switch (10, figure 16) located on PLS. Green power indicator lamp (11) will illuminate.

Note

LCD display may require 5-20 minutes warm-up period in temperatures below 32°F (0°C).

(6) Install neck strap, if necessary.

(7) Install detachable tip as described in paragraph 53 of this work package.

CAUTION

Use care when inserting videoprobe tip into engine. The tip shall lightly contact internal engine parts. Rough contact may damage precision optical mechanisms and cause foreign object damage (FOD) to engine.

Ensure the steer/stay buttons on hand piece are not illuminated. The steer/stay buttons activate a lock that holds the probe tip in a chosen position. Lock must be released before inserting or removing videoprobe from engine to avoid damage to articulation system. Never turn the system off with the tip articulated.

c. Inspect turbine first stage vanes and blades for sulfidation or any other damage as follows:

(1) Check to ensure the steer/stay buttons on handpiece are not illuminated (figure 18). If lights are on, unlock by pressing one of the steer/stay buttons or the home button.

(2) While observing monitor (6, figure 17), carefully insert probe into borescope port.

(3) Inspect first stage vanes and blades. Any sulfidation evidence of splitting, delamination, separating, flaking or loss of material in any area of vanes or blades is not allowed. (Refer to WP 054 00).

(4) Turbine blades:

(a) Chips, pits and spits are permitted in the coating.

(b) No evidence of a crack is allowed.

(c) No nicks or cuts exposing parent metal are allowed.

(5) Turbine vanes:

(a) Axial cracks up to 0.250 inch are permitted.

(b) Cracks must be separated by a distance equal to the longer of the two cracks.

(c) Cracks must be of sufficient tightness so that the internal airfoil surface is not visible.

(d) Nicks and dents are allowed.

(e) Outer band cracks are permitted up to 0.500 in. long.

(f) Chips, pits and spits are permitted in the coating.

(g) Blade track inspection in accordance with WP 054 00, Table 3.

(6) Reinstall borescope plugs as follows:

CAUTION

Ensure borescope ports and combustion liner gromments are aligned to allow easy installation of borescope plugs. Do not force borescope plugs into ports.

Note

Metallic seals are reusable, do not discard unless there is evidence of damage.

(a) Install borescope metallic seals, P/N 23072830, into borescope plugs, P/N 23075081.

Anti-seize Compound (Never Seez) NS165 32

(b) Apply NS-165, Anti-seez compound to borescope plug stud threads.

(c) Verify combustion liner grommet is aligned to allow unobstructed installation (Figure 22). A locally manufactured alignment tool (Figure 23) or awl or equivalent will aid in aligning the floating grommet. Install borescope plug and metallic seal into turbine inlet case by hand, ensureing borescope plug sits flush on turbine inlet case. A significant gap (~ 0.100") indicates a possible interference between the borescope plug and the combustion liner grommet (Figure 24). Install new nuts. Torque nuts initially to 10-15 lb-in, then torque nuts in 5 lb-in increments (while alternating between nuts) until a final torque of 25-30 lb-in is reached. (**QA**)

(7) Inspect all lines, harnesses, cables, clamps, components, etc., for leakage, installation security, etc., after inspection.

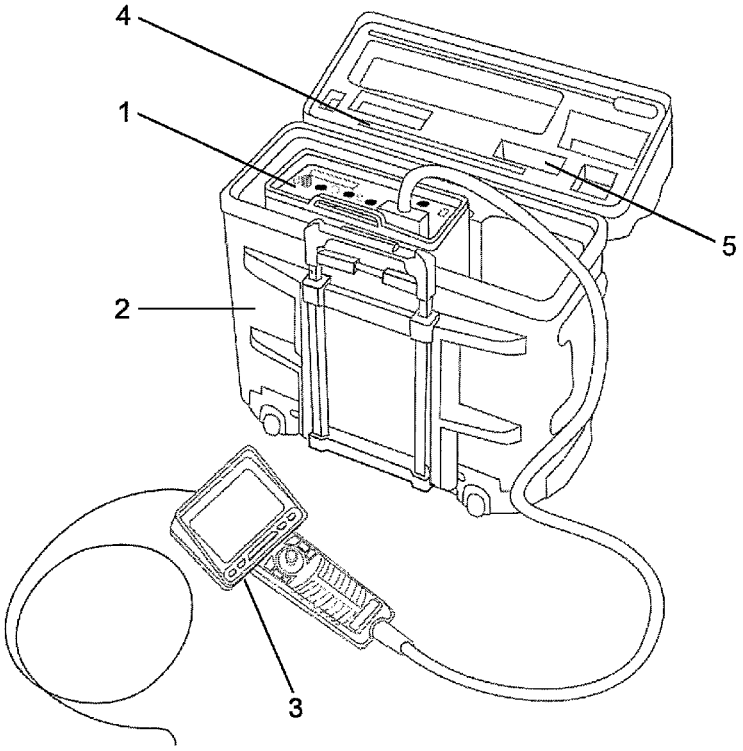

1. Processor/Light Source
2. Shipping Case
3. Videoprobe
4. XL Pro User's Manual
5. Measurement Tip and O-Ring Storage Case

Figure 14. System Components (P/N PXLM620ASYS)

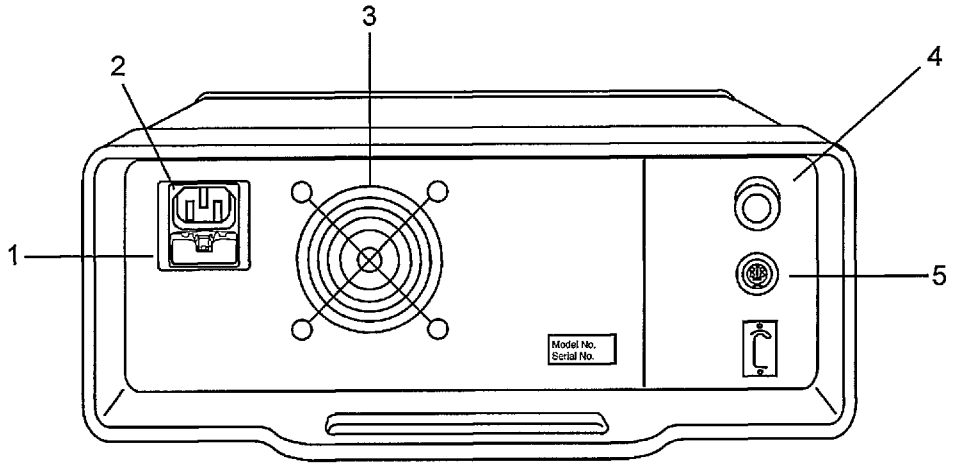

1. AC Fuses (2)
2. AC Power Input
3. Fan
4. DC Fuse (1)
5. DC Power Input

Figure 15. Processor/Light Source, P/N PLS500D - Rear Panel

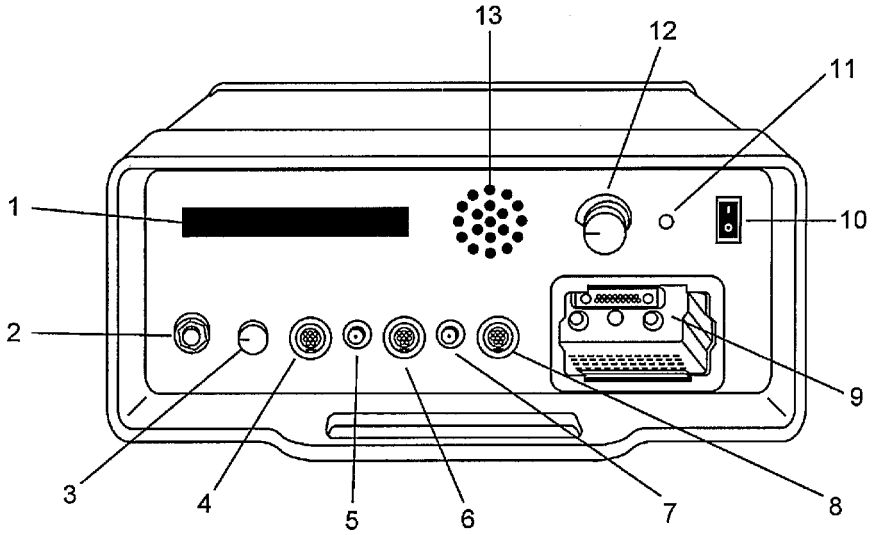

1. 3.5 Inch Floppy Disk Drive
2. Line-Level Audio-Out Jack
3. Speaker Volume Control Knob
4. PS/2 Style Keyboard Connector
5. Composite Video Out
6. S-Video Out
7. Composite Video In
8. S-Video In
9. Power Plug Receptacle
10. Power On/Off Switch
11. Power Indicator Lamp
12. Brightness Control Knob
13. Built-in Speaker

Figure 16. Processor/Light Source, P/N PLS500D - Front Panel

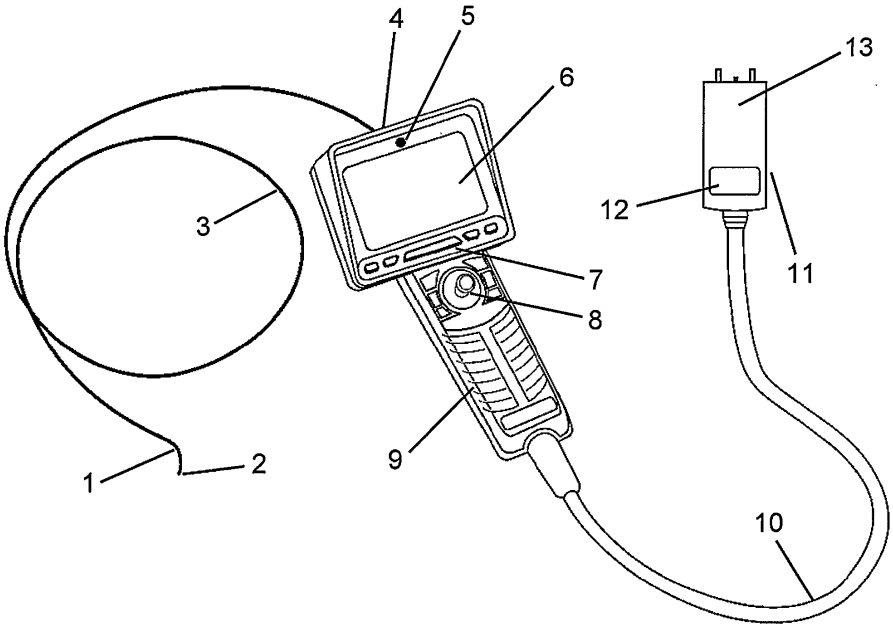

1. Articulating Section
2. Tip Section
3. Insertions Tube
4. Torsional Strain Relief
5. Microphone
6. 5" LCD Monitor
7. Key Pad
8. Joystick
9. Handpiece
10. Power Tube
11. Push-Release Latch
12. Data Label
13. Power Plug

Figure 17. Videoprobe Components Identification

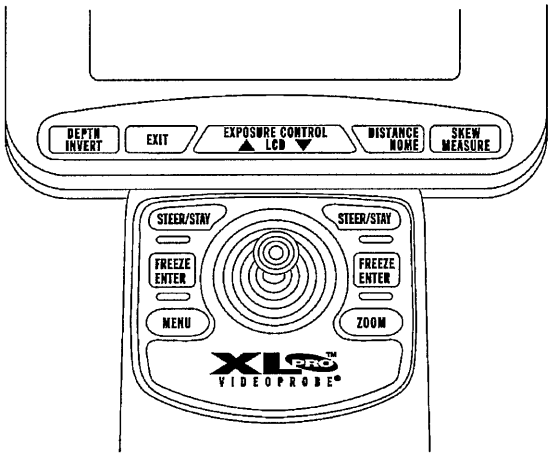

Figure 18. PXLM Handpiece

53. INSTALLATION, REMOVAL, AND CLEANING OF DETACHABLE TIPS FOR FLEXIBLE VIDEOPROBE WITH DEFECT MEASURING SYSTEM, P/N PXLM620ASYS

Materials Required

Specification No./Part No.	Nomenclature
–––	Cloth, Lint–free
TT–I–735	Alcohol, Isopropyl
XA126 (part of PXLM620ASYS)	O–Ring, Measurement Tip

CAUTION

Do not force the detachable lens optics on or off. Twisting the bending neck may damage probe.

Damage to the tip attachment mechanism may occur if the videoprobe is operated without a probe tip or protective headguard in place.

Measurement tips require a small O–ring between the probe head and tip. This ensures proper seating of the measurement tips for optimum accuracy during measurements. Check the O–ring prior to each use, and replace if missing or excessively worn. Replacement O–rings are kept in the measurement tip case (5, figure 14).

Measurement tips (P/N XTM650FG and XTM650SG) shall only be used when measurements are required and shall not be used for general viewing or inspection. Instead, viewing tips (P/N XT650FF, PXT6100FG, or PXT6100SG) shall be used for general viewing or inspection purposes.

NOTE

When using the detachable tips, always clean and dry tips with a lint–free cloth before and after use. Cleaning the tips is very important in order to view a quality image, take accurate measurements, and keep the equipment in good working order. Tip lenses may be cleaned with a spray window cleaner, if needed. Always store tips in protective case.

a. Installation and removal of direct view videoprobe tip, P/N XT650FF, headguard (no color), forward view videoprobe tip, P/N PXT6100FG (black), and forward view measurement tip, P/N XTM650FG (white), (figure 19).

(1) Align green dot on detachable tip with green dot on probe head.

(2) Gently push the tip onto the probe head and rotate clockwise until locking wire snaps into place. Check for secure attachment by gently pulling on the tip to ensure it will not release.

(3) To remove, push the locking wire away from the probe head. Holding the locking wire away from the probe head, rotate counterclockwise. Remove tip from probe head, clean with lint–free cloth, and store in the protective case.

b. Installation and removal of side view videoprobe tip, P/N PXT6100SG (blue), and side view measurement tip, P/N XTM650SG (green), (figure 20).

(1) Align green dot on detachable tip with green dot on probe head.

(2) Gently push the tip onto the probe head and rotate clockwise 10° until the spring snaps into place. Check for secure attachment by gently pulling on the tip to ensure it will not release.

Note

Side view tips may be difficult to remove. Exercise caution and patience when removing the side view tips.

(3) To remove, slide the pin away from the probe head. Holding the pin away from the probe head, gently rotate counterclockwise 10° and remove the tip from the probe head. Clean with lint–free cloth, and store in the protective case.

Isopropyl Alcohol TT–I–735 **56**

c. Clean probe head using a 70% alcohol to water solution. Dry with a clean lint–free cloth.

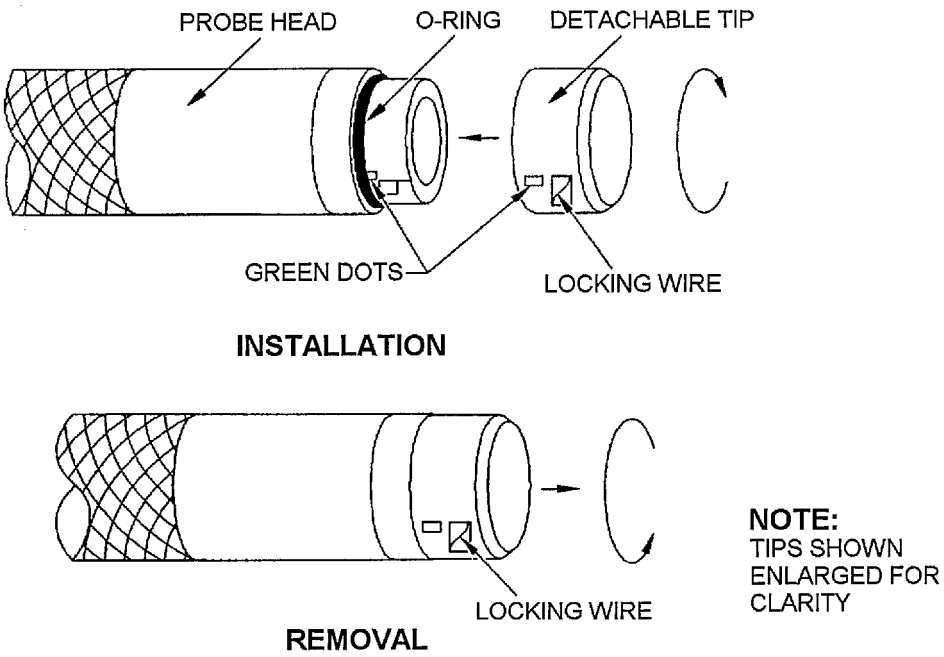

Figure 19. Forward View Videoprobe Tip, Installation and Removal

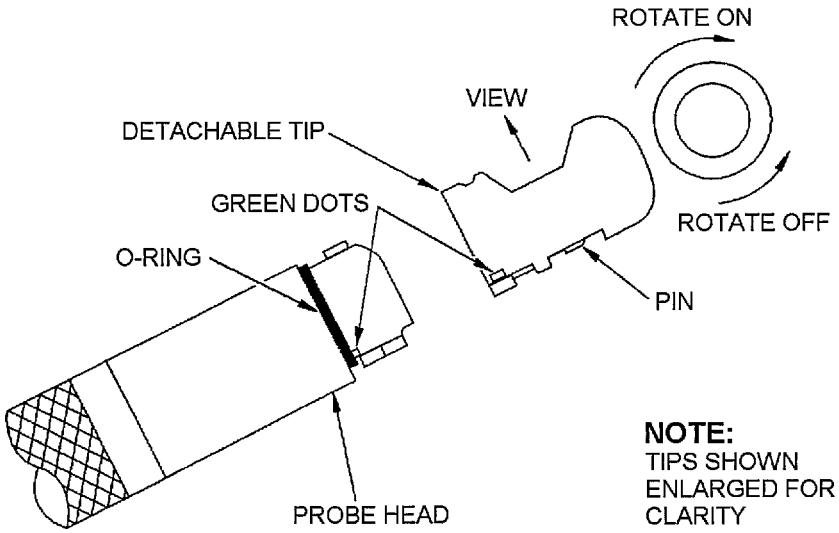

Figure 20. Side View Videoprobe Tip, Installation and Removal

54. BORESCOPE INSPECTION OF COMPRESSOR BLADES USING THE 2002AS100-1 BORESCOPE.

NOTE

When available, flexible videoprobe with defect measuring system, P/N PXLM620ASYS or equivalent, may be used in place of flexible borescope, P/N 2002AS100-1, (paragraph 55).

CAUTION

The Flexible Videoprobe with Defect Measuring System, P/N PXLM620ASYS or equivalent, shall be used only if operator has received proper training. Refer to the Videoprobe Users Manual (P/N PXA102F) supplied in the Videoprobe carrying case for proper use, including setup, handling and care, cleaning, viewing and measuring. Videoprobe contains very precise instruments that are delicate. Handle all parts with care and return to case when not in use. Measurement tips (P/N XTM650FG and XTM650SG) shall only be used when taking a measurement is required and shall not be used for general viewing or inspection. Viewing tips (P/N XT650FF, PXT6100FG, or PXT6100SG) shall be used for general viewing or inspection.

Support Equipment Required

Part No./Type Designation	Nomenclature
2002AS100-1	Borescope set, flexible 6MM
2004AS100-1	Source, fiberoptic light

a. Inspect compressor blades through the fifth and tenth stage bleed ports using 2002AS100-1 borescope and 2004AS100-1 light source. (See figure 21.) If this borescope is unavailable, a 6mm fiber-optic system is ideal. A 7mm system may be used in the fifth stage, but will not fit in the tenth stage blade track.

b. Refer to WP 045 00 for compressor blade limits.

55. INSPECTION OF COMPRESSOR BLADES USING FLEXIBLE VIDEOPROBE WITH DEFECT MEASURING SYSTEM, P/N PXLM620ASYS OR EQUIVALENT.

CAUTION

The flexible videoprobe with defect measuring system, P/N PXLM620ASYS or equivalent, shall only be used if the operator has received proper training. Videoprobe contains very precise instruments that are delicate. Handle all parts with care and return to case when not in use.

Support Equipment Required

Part No./Type Designation	Nomenclature
PXLM620ASYS or equivalent	Videoprobe, Flexible, with Defect Measuring System
PXA102F	Videoprobe XL Pro User's Manual
XA207S-C-XL or equivalent	Battery Pack
PXA560 or equivalent	Accessory Kit
-----	Wrench, torque (0-150 lb-in.)

WARNING

Electrical Shock Hazard

Probe is grounded. Do not allow insertion tube or probe tip section to come into contact with a source of electrical current/voltage. Allowing such contact may result in personal injury or permanent damage to the videoprobe or inspected equipment.

Persons working on line electrical systems shall have proper training before doing so. Use proper personal protective equipment.

Use care when applying input power and when measuring voltage. Dangerous or possibly fatal voltage may be present.

CAUTION

Prior to inspection of internal engine components, caution shall be exercised to avoid engine rotation. Foreign object damage (FOD) to engine will occur if engine rotates while inspection instruments are in use. Take all necessary precautions to prevent accidental engine rotation. Ensure all nearby maintenance personnel are aware that internal engine inspection is taking place so that no engine component is rotated. Ensure that wind cannot rotate the propeller, if installed.

CAUTION

The videoprobe has an operating limit of 176°F (80°C). Allow a minimum of four hours from engine shutdown for engine to adequately cool before inserting videoprobe. The turbine inlet case and turbine vane case must be cool to the touch before performing internal engine inspection.

Use care when inserting videoprobe tip into engine. The tip shall lightly contact internal engine parts. Rough contact may damage precision optical mechanisms and cause foreign object damage to engine.

Ensure the steer/stay buttons are not illuminated. The steer/stay buttons activate a lock that holds the probe tip in a chosen position. Lock must be released before inserting or removing videoprobe from engine to avoid damage to articulation system. Never turn the system off with the tip articulated.

NOTE

Observe the general handling/operating procedures contained in the Videoprobe's User's Manual.

a. Refer to paragraph 52.b for preparation of videoprobe.

b. Inspect compressor blades through the fifth and tenth stage bleed air valves using flexible videoprobe with defect measuring system, P/N PXLM620ASYS or equivalent. First stage blades and vanes can be inspected through the compressor inlet.

c. Refer to WP 045 00 for compressor blade damage limits.

56. **QEC STORAGE AFTER ENGINE TEST.**

a. If QECA is to be stored, drain and tag oil system.

b. Preserve engine IAW WP 019, this manual.

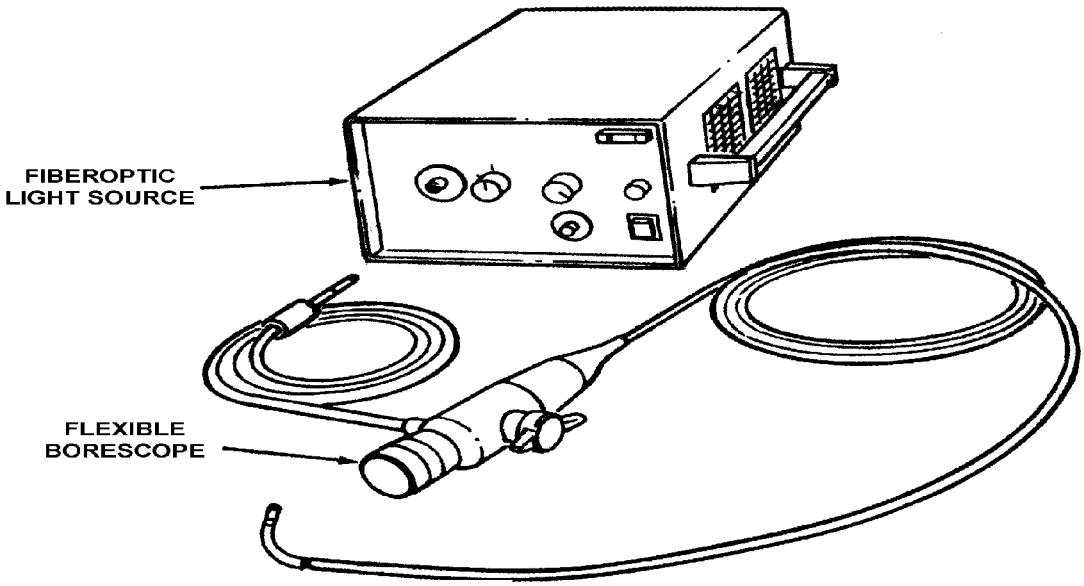

Figure 21. Flexible Borescope 2002AS100-1 and Fiberoptic Light Source 2004AS100-1

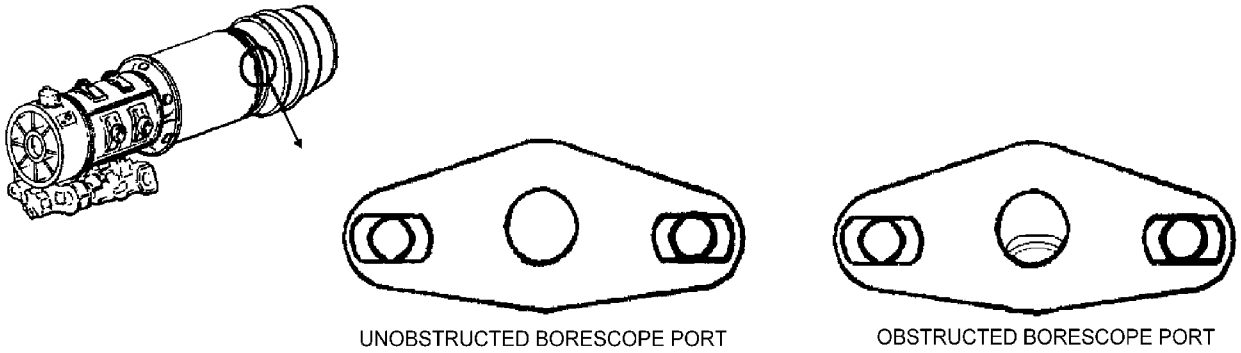

Figure 22. Borescope port obstruction inspection

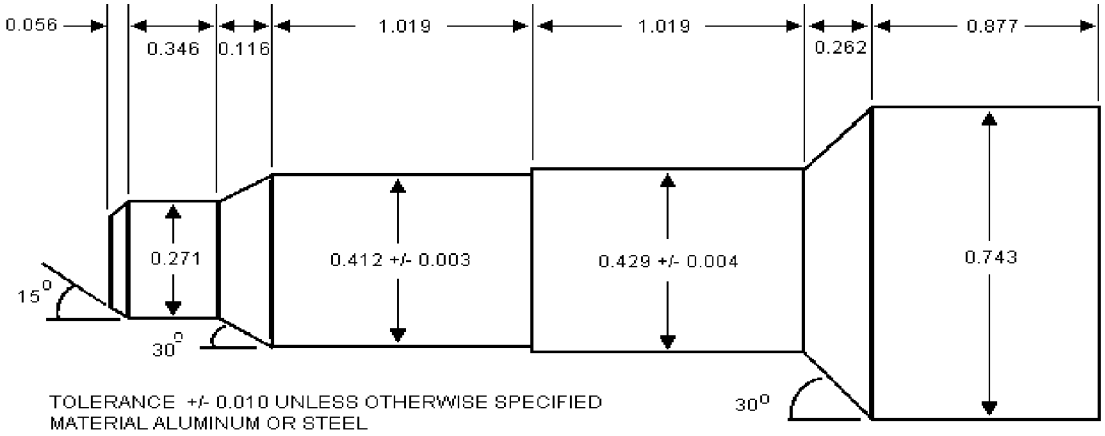

Figure 23. Locall-manufactured Borescope port combustion liner grommet alighment tool.

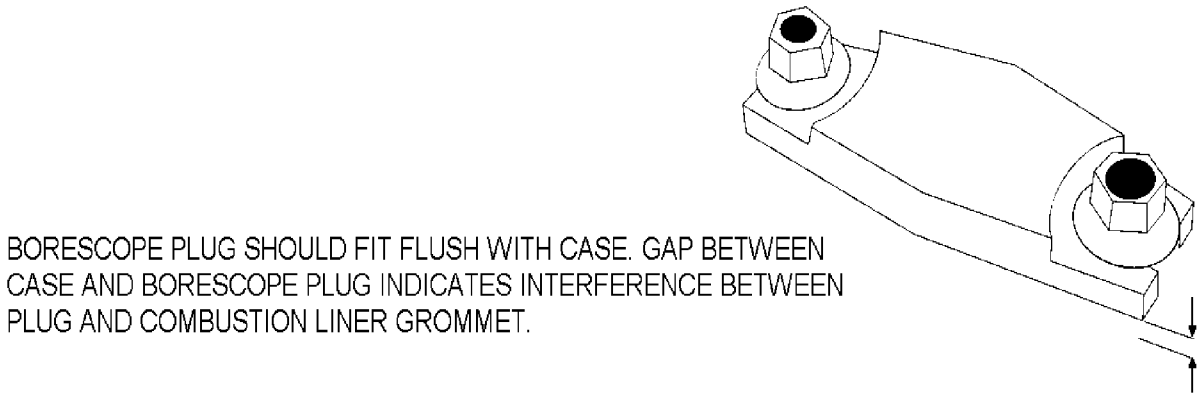

Figure 24. Borescope plug installation inspection

INTERMEDIATE MAINTENANCE

PROCEDURES AND REQUIREMENTS

FUEL NOZZLE INSPECTION PROCEDURE

This Work Package Supersedes WP 024 00, dated 1 July 2007.

Reference Material

Preparation for Engine Test . . . . . WP 022 00
Procedures and Requirements Engine Test . . . . . WP 023 00

Alphabetical Index

Subject Page No.
Fuel Nozzle Inspection 2

Record of Applicable Technical Directives

Type/No.	Date	Title and ECP No.	Date Inc.	Remarks
PPC–119	15 Jun 04	T56 Engine Borescope and Igniter Plugs, Incorporation ECP 2123R1	15 Jul 04	

1. FUEL NOZZLE INSPECTION.

Support Equipment Required

Part No./Type Designation	Nomenclature
---	Wrench, Torque (0-50 lb-in)
---	Wrench, Torque (0-150 lb-in)
2000AS720-1	Test Set, T1 Turbine Inlet Temperature
2000AS736-1-80	Cable Set, Test Cell, T1 Turbine Inlet Temperature

Materials Required

Specification or Part Number	Nomenclature
MIL-M-25681	Silicone Lubricant
MS20995NC20	Lockwire
VV-P-216	Penetrating Oil
23009249	Nut, self-locking Hex, Flanged
6805748	Gasket, Turbine Inlet Thermocouple

CAUTION

High Speed Ground Idle (HSGI) shutdown is any shutdown performed with less than two minutes Idle at Low Speed Ground Idle (LSGI), or any shutdown performed with the Digital Electronic Trim Control (DETC) switch in the "OFF" position regardless of operating time at LSGI. HSGI shutdown limits for fuel nozzles are as follows: P/N: 23033279, 23053217 or 23053954 fuel nozzles limited to 25 HSGI shutdowns. P/N: 23064861 fuel nozzles limited to 75 HSGI shutdowns. If HSGI shutdown limits are exceeded without verifying nozzle condition by performing the nozzle temperature test, turbine damage may occur.

NOTE

After completion of the fuel nozzle temperature test, HSGI shutdown count should return to zero and count begin over again. For example, if the HSGI shutdown count on an engine is 24, and the engine has passed the nozzle inspection, then the next HSGI shutdown would be recorded as 1, the next 2, and so forth. This is valid for all nozzle part numbers (polished and non-polished swirl plate) installed. If the engine fails the nozzle inspection, then the faulty nozzles are replaced and count begins over at 1 as well.

a. Prepare engine for test (WP 022 00).

NOTE

Numbering sequence of engine borescope plugs is determined from rear of engine facing forward and proceeds in clockwise rotation with number one at top.

Reuse metallic seals. Do not discard unless there is evidence of damage.

b. Remove borescope plugs from turbine inlet case positions one through six as follows:

(1) Remove borescope plug metallic seals, lockwire, and nuts. Only discard damaged metallic seals, along with lockwire and nuts.

CAUTION

Ensure borescope ports and combustion liner grommets are aligned to allow easy installation of thermocouples. Do not force thermocouples into ports.

c. Install six thermocouples (part number 23075403 with revision H or later) using new gaskets P/N 6805748, into borescope ports. Install thermocouple mounting nuts and torque to 74 to 89 lb-in. (QA)

d. Connect wire harness to thermocouples and torque nuts to 18 to 20 lb-in. Ensure wire harness is connected to horizontal pair of thermocouple terminals. (QA)

Date: BUNO: Squadron: VAW ––

Engine S/N:	TSLR:	TSN:		
Position	Sample 1	Sample 2	Sample 3	
P/N–F/N	TIT/TMTC	TIT/TMTC	TIT/TMTC	Average TIT
#1/	/	/	/	
#2/	/	/	/	
#3/	/	/	/	
#4/	/	/	/	
#5/	/	/	/	
#6/	/	/	/	

Figure 1. Fuel Nozzle Temperature Test Data Sheet

CAUTION

To prevent damage to wire harness during engine test, ensure that harness does not contact engine.

e. Route and secure wire harness from engine to test set.

NOTE

Test set displays temperature in degrees Fahrenheit and has six stations for connection of wire harness. Ensure six thermocouple wires from positions one through six correspond with stations on test set. If an “open” is displayed on the thermometer or an ambient temperature is not observed, check connections on the cables or for defective thermocouples.

f. Connect wire harness to test set.

g. On test set, set power switch to on, and check all six stations for readings indicating proper installation.

h. Start engine (WP 023 00) and increase power on selected engine until Turbine Measured Temperature Cockpit (TMTC) reaches 685°C.

i. Allow temperature to stabilize for 2 minutes before taking test set readings. Record Turbine Inlet Temperature (TIT) and TMTC in appropriate columns of Figure 1.

NOTE

While recordings temperature readings, ensure that a stable TMTC reading of 685°C is maintained while recording all TIT values to ensure consistency in test data.

All TIT readings shall be taken from display on front of test set. Test set will display individual TIT readings when corresponding selector switch is set to corresponding number.

j. Obtain TIT/TMTC readings for each thermocouple (positions one thru six). Repeat two more times for a total of three TIT/TMTC readings for each thermocouple position. Ensure that each reading is taken in succession (position one first, then position two, etc.). Average the three readings and record in the “Average TIT” column on the Fuel Nozzle Temperature Test Data Sheet (figure 1). Retain one copy of completed Fuel Nozzle Temperature Test Data Sheet in the respective engine logbook and forward one copy to the T56–A–427 Engine FST.

k. If any TIT exceeds 1950°F, then reject engine.

l. Replace all six nozzles if any TIT is greater than 1,850°F. Change all nozzles that have a TIT reading less than 1,600°F.

m. If difference between lowest and highest TIT readings exceeds 120°F, change all nozzles that have a TIT reading 120°F lower than the highest TIT reading. Repeat paragraphs a thru m.

n. If all TIT readings are greater than or equal to 1,600°F and less than or equal to 1,850°F, engine is considered to be serviceable and no maintenance action is required.

o. Set engine logbook HSGI count to zero.

p. Shutdown and secure engine IAW WP 023 00.

q. On test set, set power switch to off and disconnect wire harness from test set.

WARNING

Hot thermocouples can cause severe burns to skin when contacted. Allow engine to adequately cool before attempting to remove thermocouples from engine.

r. Remove wire harness from thermocouples and remove thermocouples from engine.

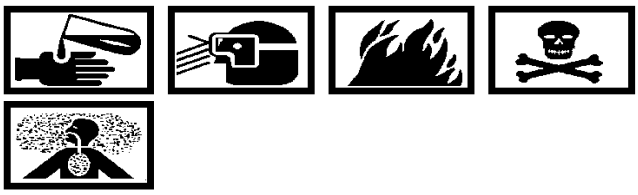

Anti–seize Compound (Never Seez) NS165 32

s. Apply Silicone Lubricant to borescope plug stud threads.

CAUTION

Ensure borescope ports and combustion liner grommets are aligned to allow easy installation of borescope plugs. Do not force borescope plugs into ports.

t. Reinstall borescope port plugs as follows:

(1) Install metallic seals into borescope plugs, and install borescope plug and metallic seal into turbine inlet case using new nuts. Torque nuts initially to 10 to 15 lb–in, then torque nuts in 5 lb–in increments (while alternating between nuts) until a final torque of 25–30 lb–in is reached. (QA)

u. Inspect all lines, harnesses, cables, clamps, and components for leakage and installation security after test.

INTERMEDIATE MAINTENANCE

TROUBLESHOOTING AND MAINTENANCE

Reference Material

Preparation for Engine Test . . . . . WP 022 00
Procedures and Requirements for Engine Test . . . . . WP 023 00
Reduction Gear Unit Removal and Installation . . . . . WP 027 00
Torquemeter Unit and Safety Coupling Removal and Installation . . . . . WP 028 00
Accessory Drive Housing Removal and Installation . . . . . WP 029 00
Turbine Unit Removal and Installation . . . . . WP 030 00
Combustion Chamber Outer Casing, Combustion Liners and Turbine Coupling Shaft Removal and Installation . . . . . WP 031 00
Reduction Gear Drain Plug Insert Replacement . . . . . WP 032 00
Propeller Shaft Oil Seal Removal and Installation . . . . . WP 034 00
Reduction Gear Unit Disassembly . . . . . WP 038 00
Reduction Gear Parts Cleaning, Inspection, Repair, and Replacement . . . . . WP 039 00
Reduction Gear Unit Assembly . . . . . WP 040 00
Torquemeter Maintenance . . . . . WP 041 00
Accessory Drive Housing Cover, Gears, Seals, Plugs, and Scavenge Pressure Relief Valve- Assembly . . . . . WP 044 00
Compressor Blades and Vanes Inspection and Repair . . . . . WP 045 00
Compressor Diffuser, Rear Bearing, and Seal Maintenance . . . . . WP 046 00
Compressor Disassembly . . . . . WP 047 00
Compressor Air Inlet Housing and Diffuser Assemblies Maintenance . . . . . WP 048 00
Compressor Assembly . . . . . WP 049 00
Combustion Liners, Liner Supports, and Crossover Tubes Maintenance . . . . . WP 051 00
Turbine Unit Disassembly . . . . . WP 053 00
Turbine Unit Parts Cleaning, Inspection, and Repair . . . . . WP 054 00
Turbine Unit Assembly . . . . . WP 055 00
Inner Rear Exhaust Cone, Thermal Insulation Blanket, Turbine Rear Scavenge Pump and Support Maintenance . . . . . WP 056 00
Fuel and Air Hoses and Metal Tubing Maintenance . . . . . WP 057 00
Dual Element Fuel Pump Maintenance . . . . . WP 058 00
High Pressure Fuel Filter Maintenance . . . . . WP 059 00
Paralleling Valve Maintenance . . . . . WP 060 00

Reference Material (cont)

Low Pressure Fuel Filters and Elements Maintenance . . . . . WP 061 00
Fuel Filter Differential Pressure Indicator Maintenance . . . . . WP 062 00
Pressure Switch Maintenance . . . . . WP 063 00
Fuel Control Maintenance . . . . . WP 064 00
Coordinator Control Maintenance . . . . . WP 065 00
Fuel Manifold Drain Valve Maintenance . . . . . WP 066 00
Fuel Nozzles Maintenance . . . . . WP 067 00
Burner Drain Valve Assembly Maintenance . . . . . WP 068 00
Reduction Gear Oil Pump Maintenance . . . . . WP 070 00
Reduction Gear Unit Oil Filter Maintenance . . . . . WP 071 00
Reduction Gear Unit Magnetic Plug and Oil Screen Maintenance . . . . . WP 072 00
Power Section Main Pressure and Scavenge Oil Pump Maintenance . . . . . WP 075 00
Power Section Pressure Regulating Valve Maintenance . . . . . WP 076 00
Power Section Oil Filter Maintenance . . . . . WP 077 00
Power Section External Scavenge Oil Pump Maintenance . . . . . WP 078 00
Thrust Sensitive Switch Maintenance . . . . . WP 080 00
Ignition Exciter Maintenance . . . . . WP 082 00
Thermocouples Maintenance . . . . . WP 083 00
Ignition Relay Maintenance . . . . . WP 084 00
Spark Igniters Maintenance . . . . . WP 085 00
Spark Igniter Leads (LH and RH) Maintenance . . . . . WP 086 00
Power Section Thermocouple Harness Maintenance . . . . . WP 087 00
Speed Sensitive Valve Maintenance . . . . . WP 088 00
Bleed Air Valve Maintenance . . . . . WP 089 00
Compressor Bleed Air Filter Maintenance . . . . . WP 090 00
Anti-icing Solenoid Valve Maintenance . . . . . WP 091 00
Anti-icing Air Valve Removal and Installation . . . . . WP 092 00
Anti-icing Tubes Maintenance . . . . . WP 093 00
EMS Components Maintenance . . . . . WP 094 00
Electrical and Electronic Receptacle Panel MIL-P-22438
Operation and Maintenance Instructions 54460-1 Propeller . . . . . NAVAIR 03-20CFA-1
Test Set, Electrical Components Check-Out,
Operation and Service Instructions w/IPB . . . . . NAVAIR 17-15AC-4
Turboprop Engine Test System Maintenance . . . . . NAVAIR 17-15AH-28
E-2B/C and C-2A Quick Engine Change Manual A1-E2C2A-QEC-000
E-2B/C and C-2A Quick Engine Change Manual A1-E2C2A-QEC-010
E-2C Aircraft General Information . . . . . NAVAIR 01-E2AAA-2-1
Powerplant System Maintenance, Navy Model E-2C Aircraft (Volume 1) . . . . . NAVAIR 01-E2AAA-2-10

Reference Material (cont)

Powerplant System Maintenance Navy Model E–2C Aircraft (Volume 2) . . . . . NAVAIR 01–E2AAA–2–10.1
External Tubing, Cabling, and Clamping Maintenance . . . . . NAVAIR 02B–5DG–6–1–1

Alphabetical Index

Subject Page No.
Introduction 5
Maintenance Routines 5
Compressor Air Inlet Blockage Inspection 102
Compressor Water Wash Cleaning Procedure 96
Coordinator Static Check 99
CTMT Check 105
Electrical Components Checkout 98
Engine Inspection Following Sudden Engine Stop By Propeller Object Strike 102
Oil Seal Maintenance 106
Power Section 109
Reduction Gear Unit 106
Overspeed Inspection 101
Power Section Inspection 101
Safety Coupling Inspection 101
Reduction Gear Unit Flushing Procedure 97
RPM Indicating System Check 103
Tachometer Indicator/Generator Fault Isolation 105
Thermocouple System Check 100
Torquemeter Pickup Unit Check 104
Torquemeter Runout Test 101
Troubleshooting Procedures 5
Abnormally Low TMT (figure 21) 48
Air Leakage at Compressor Casing Splitline (figure 32) 64
DETC OFFSET Unable to Calibrate Torque 56
Differential Pressure Indicator Actuated on Scavenge Oil Filter (figure 37) 69
EMS Confirms Bogdown (figure 47) 84
EMS Confirms CTMT Above 875°C (figure 43) 76
EMS Confirms Flameout (figure 48) 86
EMS Confirms High Vibration or Vibration Sensor Fault (figure 50) 91
EMS Confirms ISHP Over 5125 (figure 41) 74
EMS Confirms ISHP Over 6000 (figure 42) 75
EMS Confirms Long Start (figure 49) 88
EMS Confirms Low Engine Power (figure 45) 79
EMS Confirms RPM Over 103% or 108% (14,666 or 15,378 RPM) (figure 40) 73

Alphabetical Index (cont)

Subject Page No.

EMS Confirms Surge Detected (figure 46) 82
EMS Confirms TMT Above 930°C (figure 44) 78
Engine Does Not Rotate During Start (figure 2) 9
Engine Lights–off But Will Not Accelerate to Correct Speed (figure 4) 15
Engine Overspeeds or EMS Confirms RPM Exceeds 14,524 (figure 18) 43
Engine Overtorque (figure 39) 72
Engine Removed For Fumes In Cockpit (figure 33) 65
Engine Rotates But Fails to Light–off During Start (figure 3) 11
Engine Unable to Reach Maximum Controlled Speed of 100% RPM (14,239 RPM) (figure 16) 39
Engine Will Not Shut Down Electrically (figure 27) 58
Engine/Propeller Operated in Wrong Configuration (figure 38) 70
Excessive Oil Consumption (figure 14) 33
Excessive Oil Spewing from Diffuser Vents (figure 13) 32
Excessive TMT with DETC Switch in CONTROL or LIMIT Positions (figure 20) 46
Ground Idle Speed Does Not Change When Selected (figure 9) 28
High Horsepower and High Fuel Flow at Normal TMT (figure 25) 55
Hunting (RPM Fluctuation) (figure 17) 41
Ignition System Does Not Shut Off Electrically (figure 10) 29
Low Horsepower and High Fuel Flow at Normal TMT (figure 24) 54
Low Horsepower and Low Fuel Flow at Normal TMT (figure 22) 50
Low Horsepower with DETC Switch in CONTROL Position (figure 23) 53
Low RPM at Ground Idle and/or Flight Idle (figure 8) 27
Magnetic Plug Chip Detector Light Comes On (figure 36) 68
No Vibration Indication or Vibration Indication Too Low (figure 30) 61
Power Section Oil Pressure Out of Limits at 100% RPM and at Normal TMT (figure 11) 30
Power Section or Reduction Gear Unit Filled With Oil (Static Oil Leak–down) (figure 15) 36
Primary Pump Light Does Not Go On Between 15 and 63% (2200–9000 RPM) (figure 34) 66
Primary Pump Light Does Not Go Out Above 63% (9000 RPM) During Start (figure 35) 67
Propeller Fails to Rotate by Hand Prior to Start (figure 1) 8
Propeller Rotates in Reverse Direction in Flight or on Test Stand (figure 7) 26
Reduction Gear Unit Oil Pressure Out of Limits at 100% RPM and at Normal TMT (figure 12) 31
Starting Time Limit Exceeded While TMT is Well Below Maximum (Cold Start) (figure 6) 25
Tailpipe Torching (figure 26) 56
TMT Too High During Acceleration (Hot Start) or EMS Confirms CTMT Exceeds 830 °C on Start (figure 5) 20
Unable to Obtain Correct Maximum TMT with DETC Switch in CONTROL or LIMIT Positions (figure19) 44
Vibration Indication Limits Exceeded (figure 31) 62

Alphabetical Index (cont)

Subject Page No.

Vibration Indications High (figure 29) 60

Vibration Indicator Readings Fluctuate (figure 28) 59

Record of Applicable Technical Directives

None

1. **INTRODUCTION**.

2. This work package (WP) provides troubleshooting, adjustment, and repair procedures for engines tested on the turboprop engine test system (TPETS).

3. Refer to WP 022 00 for information concerning the TPETS installation. Refer to WP 094 00 for engine monitoring system (EMS) engine components maintenance.

4. **TROUBLESHOOTING PROCEDURES**.

Support Equipment Required

Part No./Type Designation	Nomenclature
6796089	Attachment, propeller brake release
6895969	Probe, thermocouple tester
23030189	Tester, thermocouple resistance
23032404 (6796182)	Spline, starter shaft turning
–––	Wrench, torque (0–300 lb in.)

Materials Required

Specification No./Part No.	Nomenclature
MIL–PRF–23699	Oil, lubricating
MIL–H–83282	Hydraulic Fluid

5. Engine troubles are of two general types: the very obvious, and those not so obvious, which, if not detected, may cause serious and considerable damage to the engine.

6. It is therefore essential that test stand operating personnel have a thorough knowledge of the correct turbine measured temperature, fuel pressure, lube oil pressure and temperatures, and other important details of normal engine operation so they can quickly recognize any engine trouble that occurs.

7. Isolating the engine trouble can be accomplished by first starting with the most probable reason for trouble. Refer to tables 1 thru 7 for types of engine trouble.

8. Test personnel should check each possibility in turn, until by process of elimination, he has isolated the trouble. The mechanic should not jump to conclusions. Systematic diagnosis should replace guess work. This will save time and promote accuracy.

9. Figures 1 thru 50 list engine troubles, prioritized faults, and repair actions for specific engine problems. Many of the faults have been observed on engines undergoing test and are based on practical experience. However, the faults listed are not the only ones which can cause the conditions listed.

10. Refer to figure 52 for the engine wiring diagram.

11. **MAINTENANCE ROUTINES**.

12. Paragraphs that follow figures 1 thru 50 contain maintenance procedures referenced in the figures.

Table 1. Engine Start or Acceleration Trouble

Problem	See Figure
Propeller fails to rotate by hand prior to start	1
Engine does not rotate during start	2
Engine rotates but fails to light–off during start	3
Engine lights–off but will not accelerate to correct speed	4
TMT too high during acceleration (hot start) or EMS confirms CTMT exceeds 830°C on start	5
Starting time limit exceeded while TMT is well below maximum (cold start)	6
Ignition system does not shut off electrically	10
Engine unable to reach maximum controlled speed of 100% (14,329 RPM)	16
Primary pump light does not go on between 15% and 63% (2200 and 9000 RPM) during start	34
Primary pump light does not go out above 63% (9000 RPM) during start	35
EMS confirms long start	49

Table 2. Engine RPM Trouble

Problem	See Figure
Low RPM at ground idle and/or flight idle	8
Ground idle speed does not change when selected	9
Engine unable to reach maximum controlled speed of 100% (14,329 RPM)	16
Hunting (RPM fluctuation)	17
Engine Overspeeds or EMS confirms RPM exceeds 14,524	18
EMS confirms RPM over 103% or 108% (14,666 or 15,378 RPM)	40

Table 3. Engine Operation Trouble

Problem	See Figure
Propeller rotates in reverse direction in flight	7
Engine will not shut down electrically	27
Air leakage at compressor casing splitline	32
Magnetic plug chip detector light comes on	36
Engine/propeller operated in wrong configuration	38

Table 4. Engine Vibration Trouble

Problem	See Figure
Vibration indicator readings fluctuate	28
Vibration indications high	29
No vibration indication or vibration indication too low	30
Vibration indication limits exceeded	31
EMS confirms high vibration or vibration sensor fault	50

Table 5. Engine Temperature Trouble

Problem	See Figure
TMT too high during acceleration (hot start) or EMS confirms CTMT exceeds 830°C on start	5
Starting time limit exceeded while TMT is well below maximum (cold start)	6
Unable to obtain correct maximum TMT with DETC switch in CONTROL or LIMIT positions	19
Excessive TMT with DETC switch in CONTROL or LIMIT positions	20
Abnormally low TMT	21
EMS confirms CTMT above 875°C	43
EMS confirms TMT above 930°C	44

Table 6. Engine Oil Trouble

Problem	See Figure
Power section oil pressure out of limits at 100% RPM and at normal TMT	11
Reduction gear oil pressure out of limits at 100% RPM and at normal TMT	12
Excessive oil spewing from diffuser vents	13
Excessive oil consumption	14
Power section or reduction gear unit filled with oil (static oil leak–down)	15
Engine removed for fumes in cockpit	33
Differential pressure indicator actuated on scavenge oil filter	37

Table 7. Engine Horsepower or Fuel Trouble

Problem	See Figure
Low horsepower and low fuel flow at normal TMT	22
Low horsepower with DETC switch in CONTROL position	23
Low horsepower and high fuel flow at normal TMT	24
High horsepower and high fuel flow at normal TMT	25
DETC OFFSET CAL fails to calibrate torque at target min power	25A
Tailpipe torching	26
Engine removed for fumes in cockpit	33
Engine overtorque	39
EMS confirms ISHP over 5125	41
EMS confirms ISHP over 6000	42
EMS confirms low engine power	45
EMS confirms surge detected	46
EMS confirms bogdown	47
EMS confirms flameout	48

ENGINE START OR ACCELERATION TROUBLE

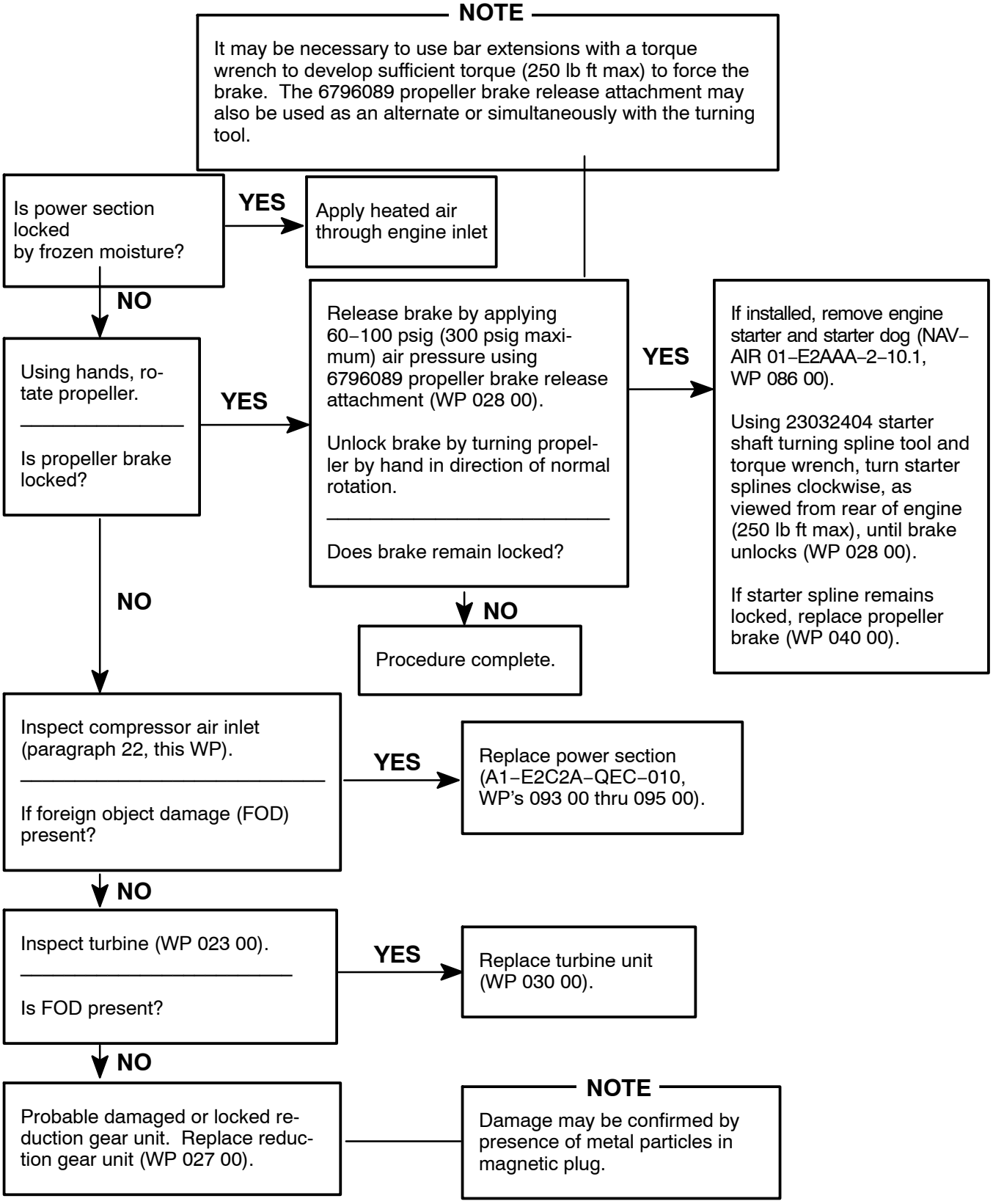

Figure 1. Propeller Fails to Rotate by Hand Prior to Start

ENGINE START OR ACCELERATION TROUBLE

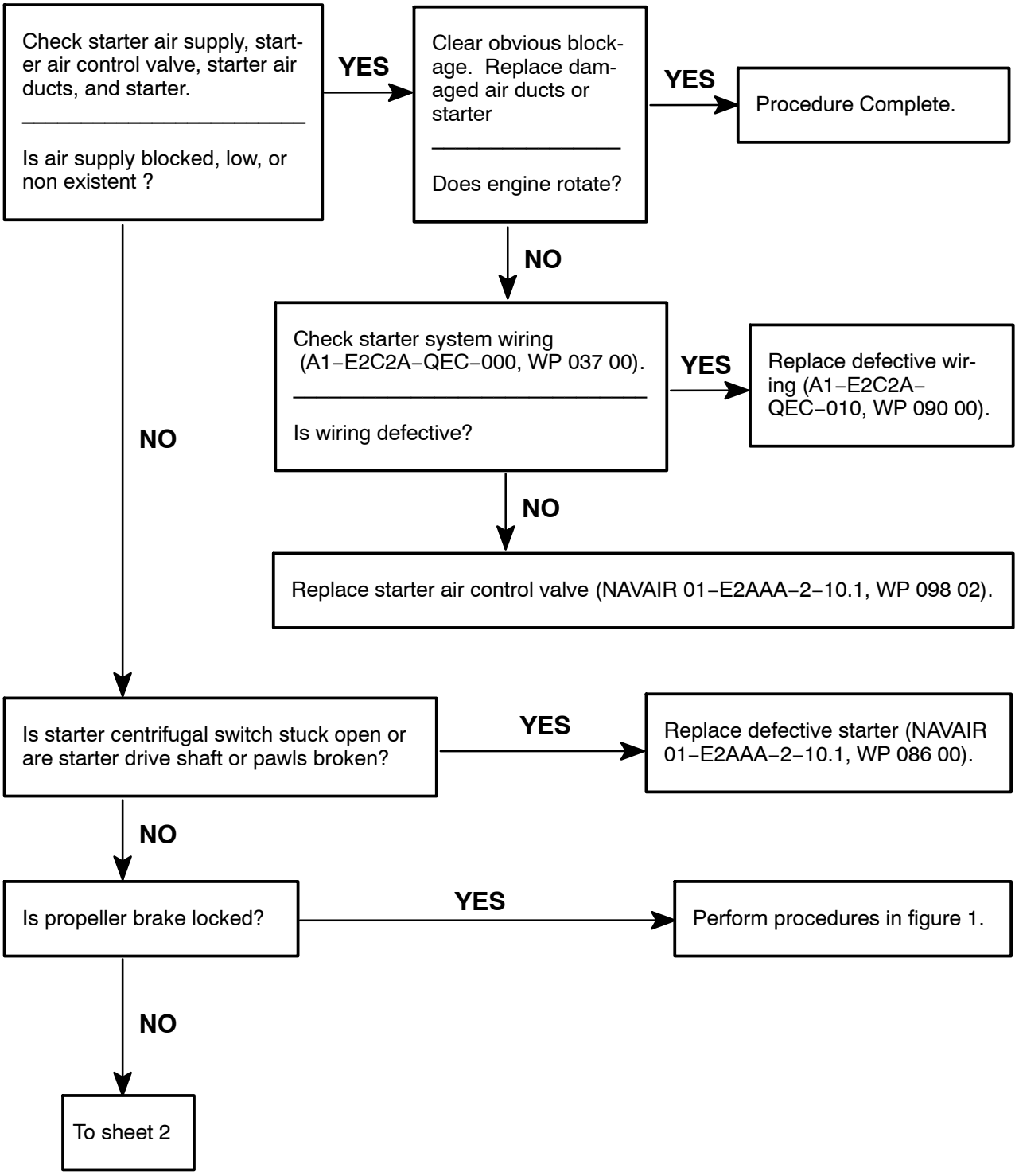

Figure 2. Engine Does Not Rotate During Start (Sheet 1 of 2)

ENGINE START OR ACCELERATION TROUBLE

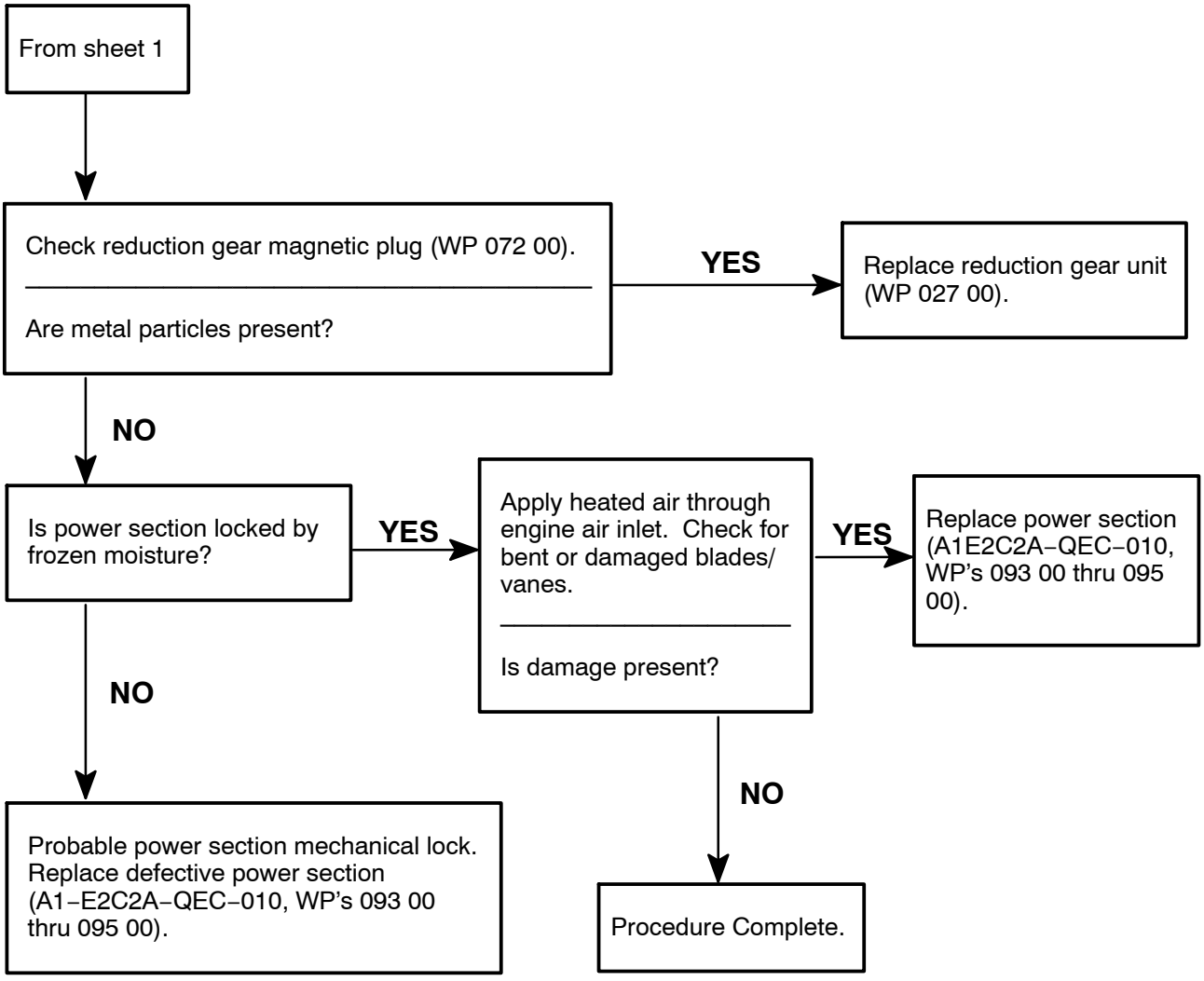

Figure 2. Engine Does Not Rotate During Start (Sheet 2)

ENGINE START OR ACCELERATION TROUBLE

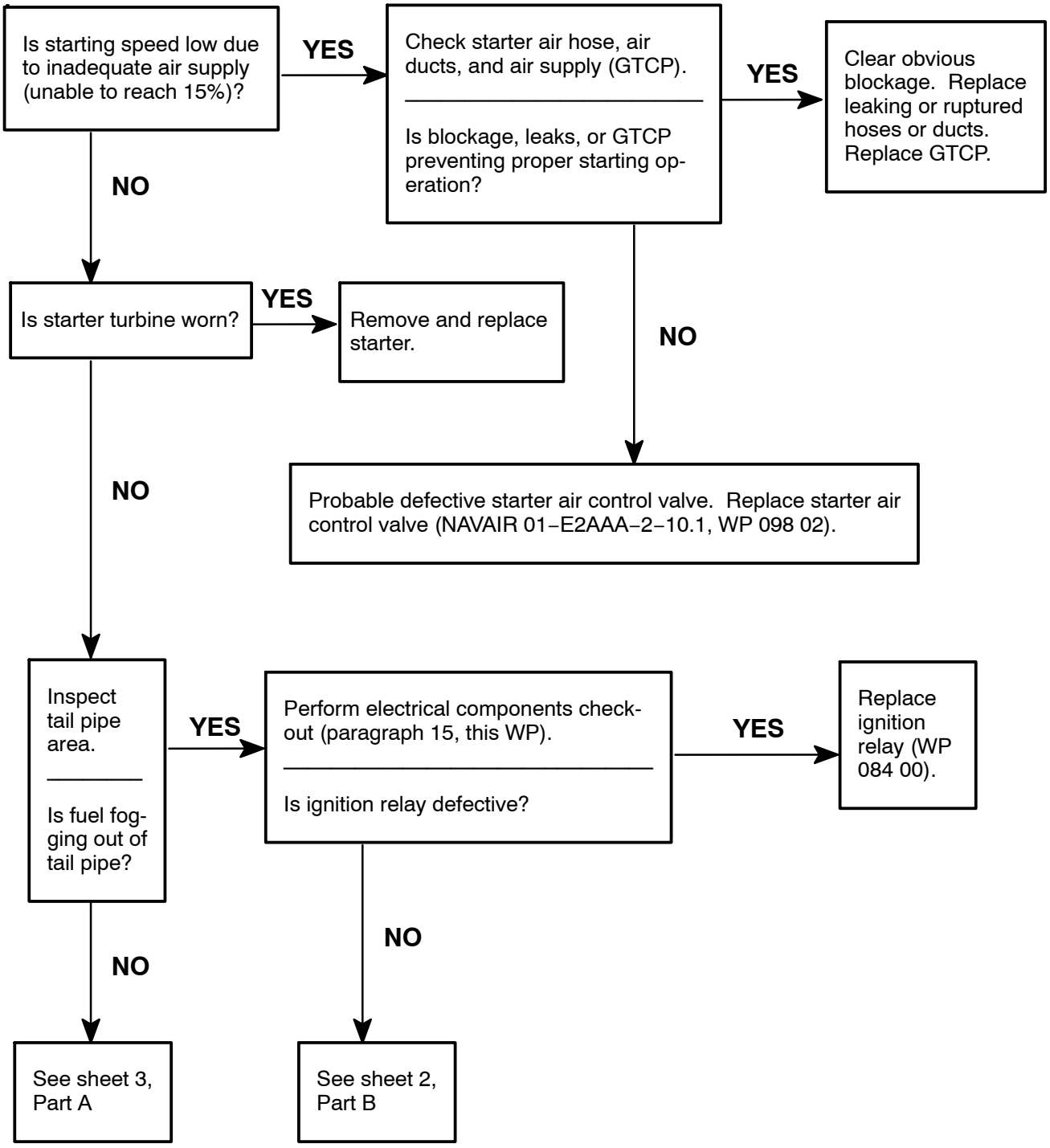

Figure 3. Engine Rotates but Fails to Light–off During Start (Sheet 1 of 4)

ENGINE START OR ACCELERATION TROUBLE

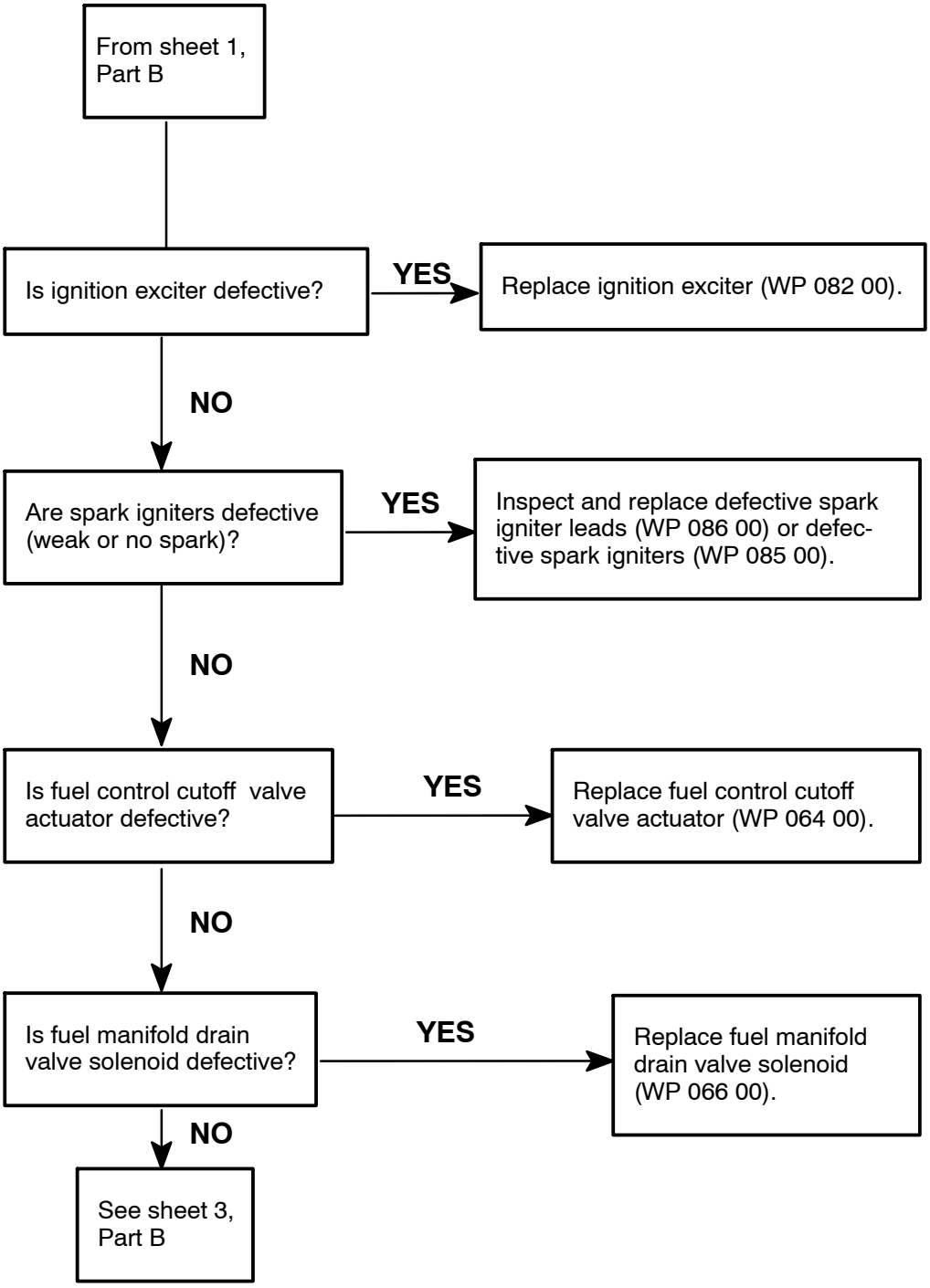

Figure 3. Engine Rotates but Fails to Light–off During Start (Sheet 2)

ENGINE START OR ACCELERATION TROUBLE

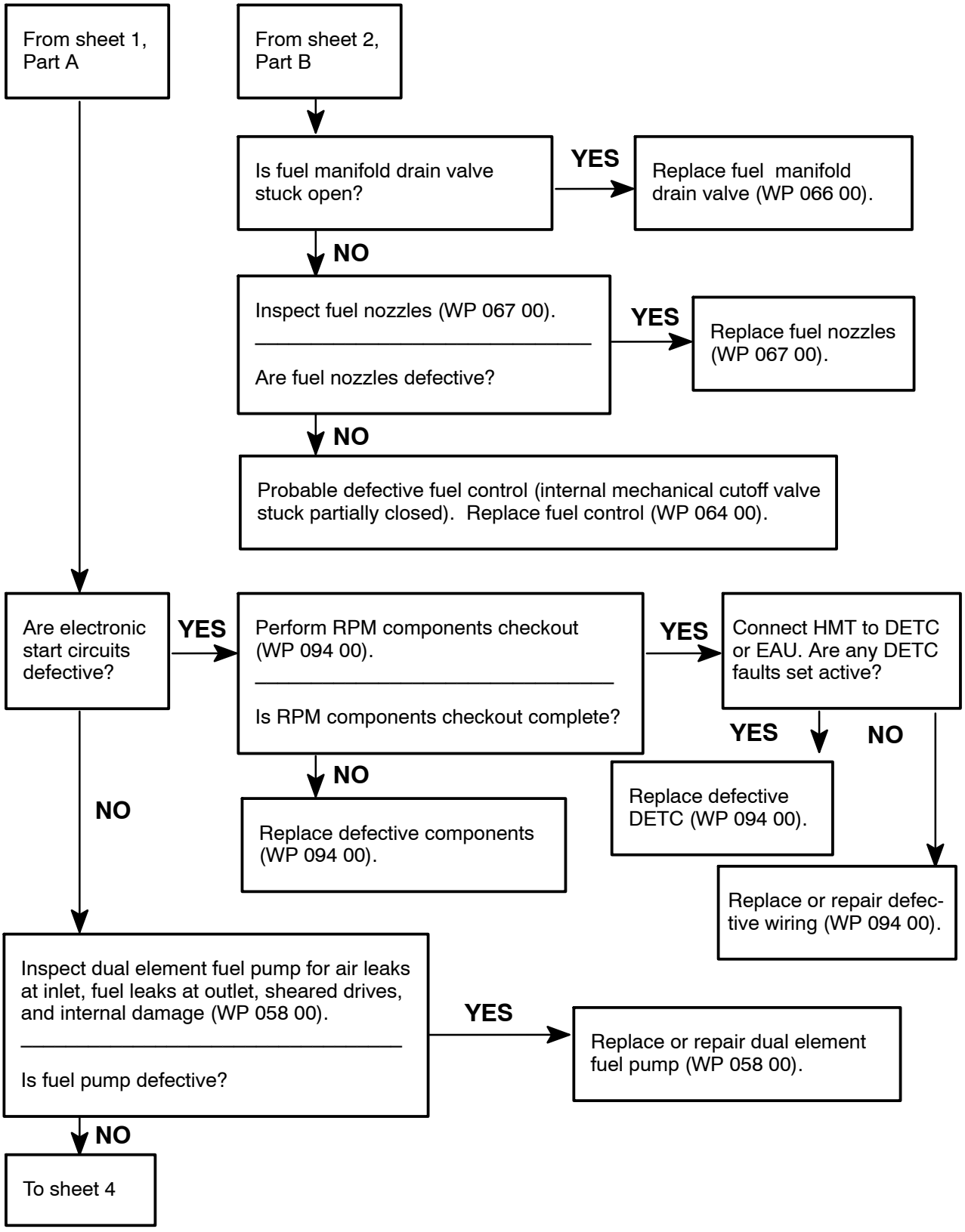

Figure 3. Engine Rotates but Fails to Light–off During Start (Sheet 3)

ENGINE START OR ACCELERATION TROUBLE

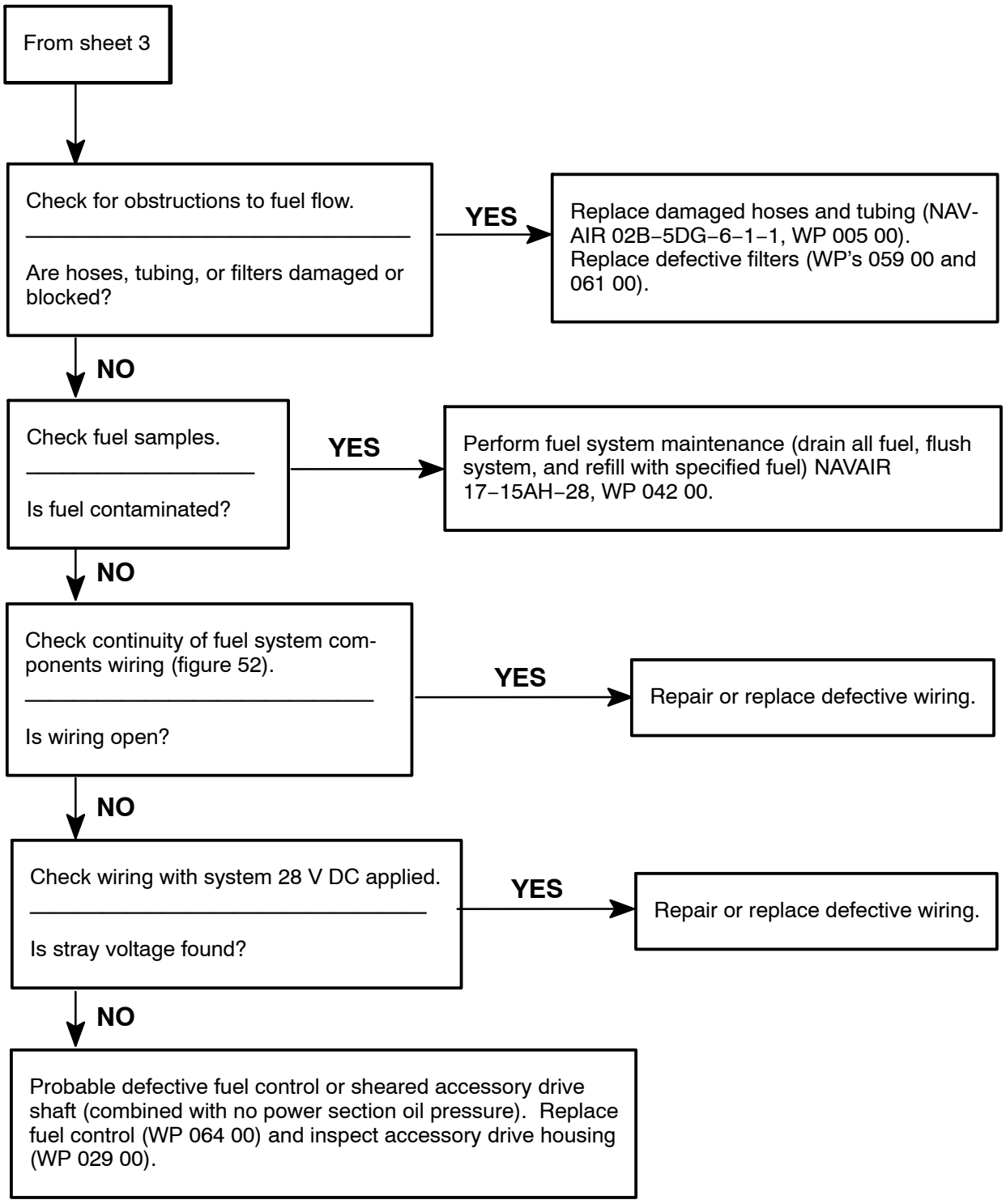

Figure 3. Engine Rotates but Fails to Light–off During Start (Sheet 4)

ENGINE START OR ACCELERATION TROUBLE

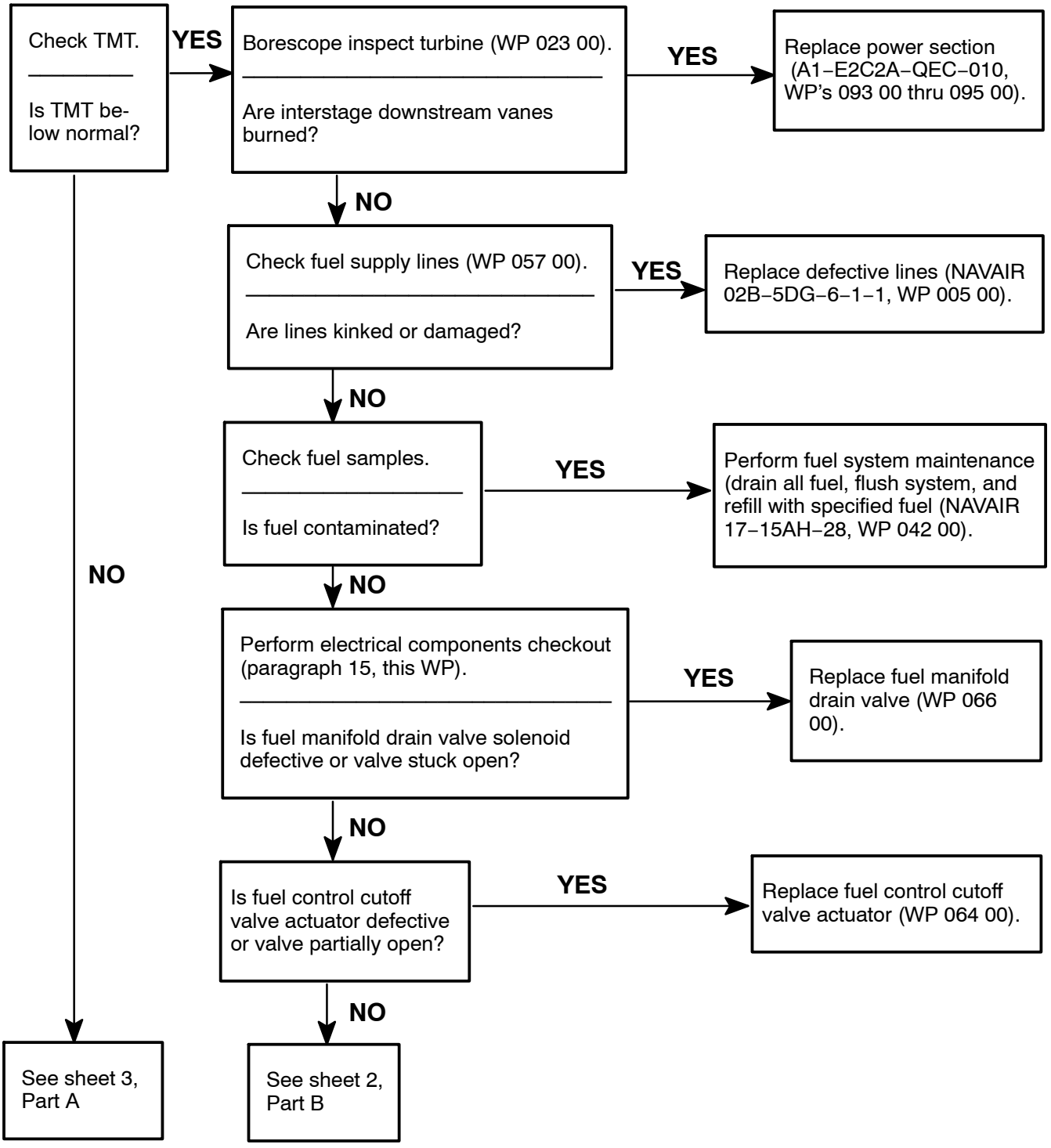

Figure 4. Engine Lights–off but Will Not Accelerate to Correct Speed (Sheet 1 of 5)

ENGINE START OR ACCELERATION TROUBLE

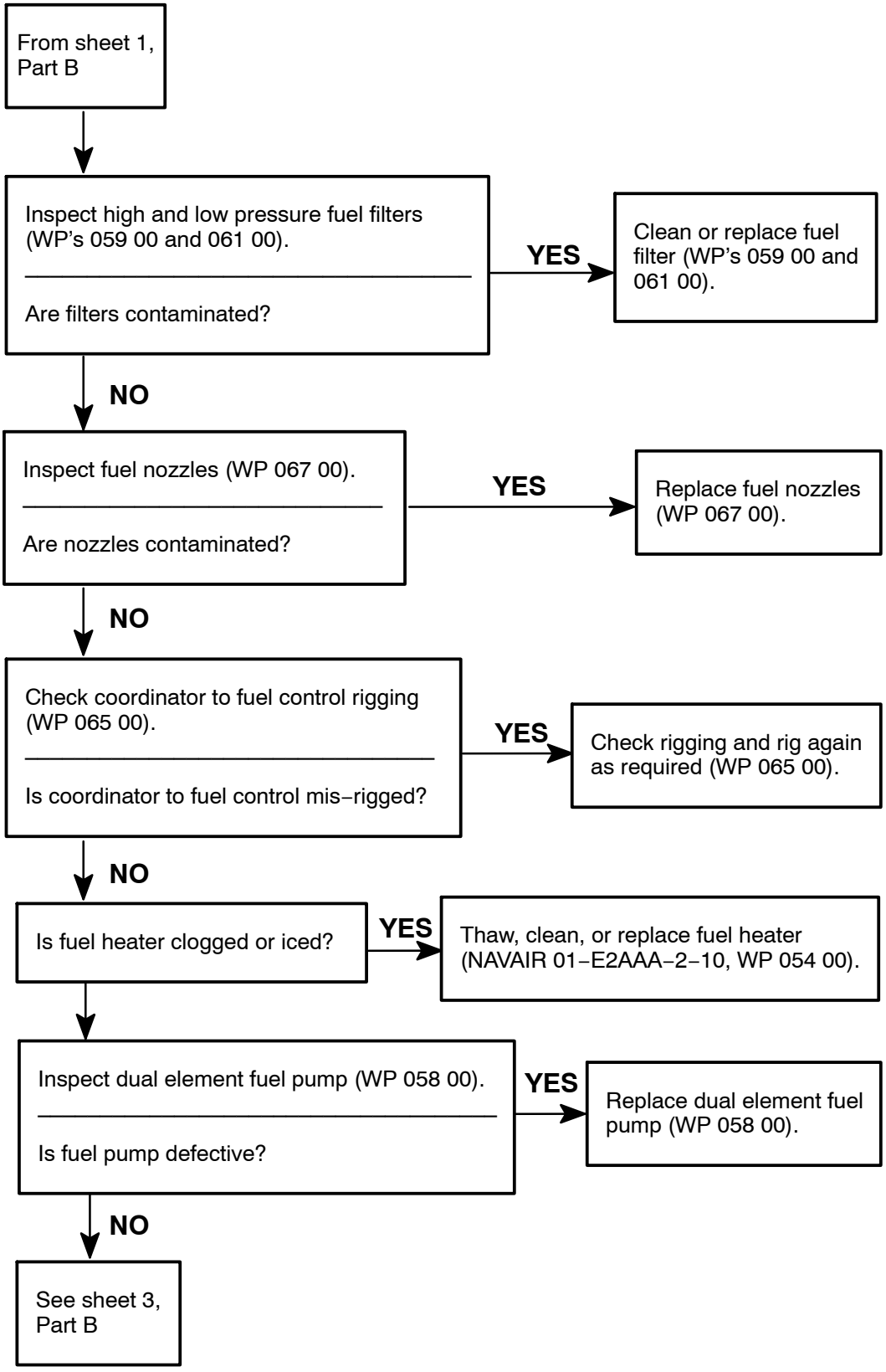

Figure 4. Engine Lights–off but Will Not Accelerate to Correct Speed (Sheet 2)

ENGINE START OR ACCELERATION TROUBLE

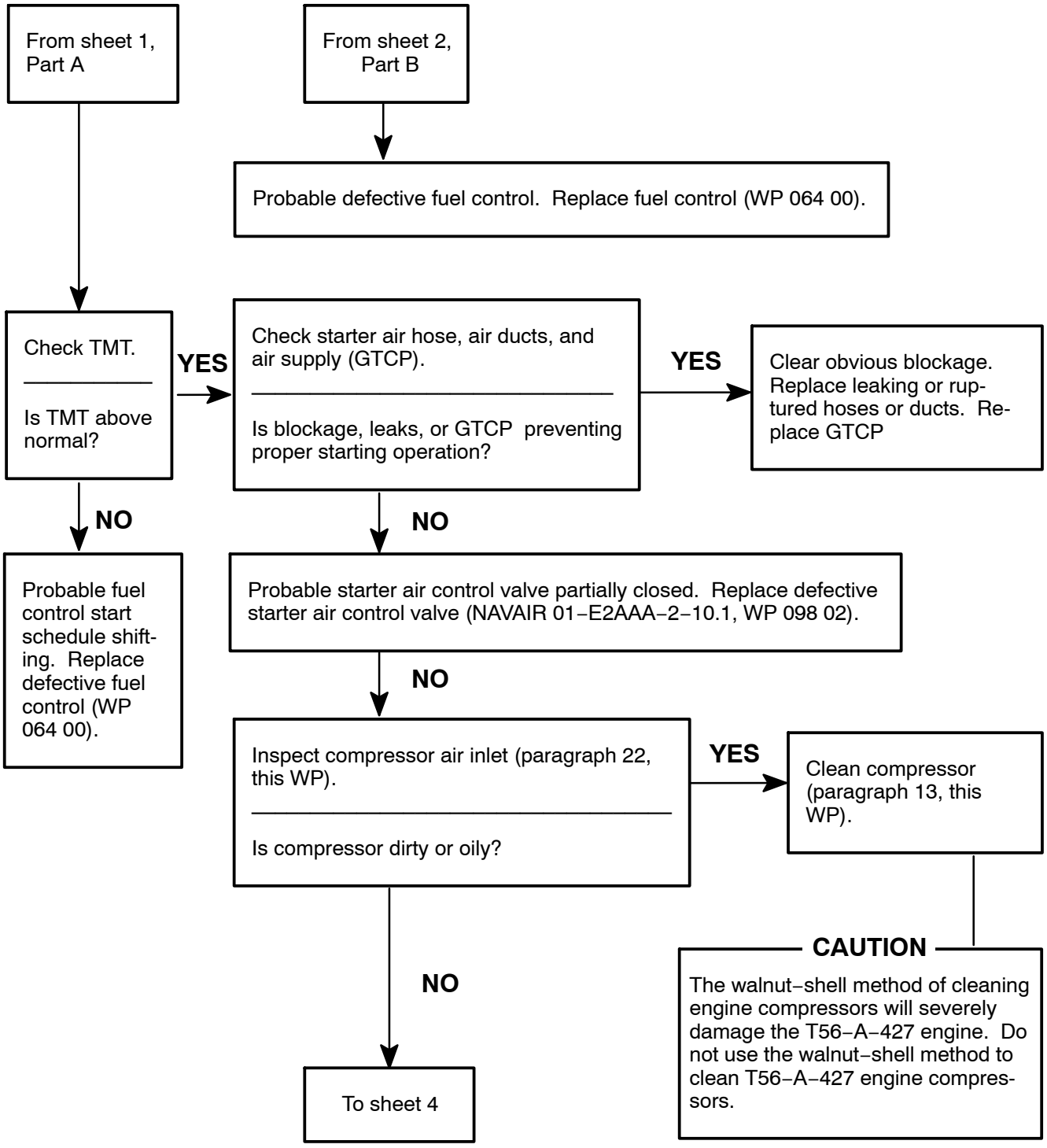

Figure 4. Engine Lights–off but Will Not Accelerate to Correct Speed (Sheet 3)

ENGINE START OR ACCELERATION TROUBLE

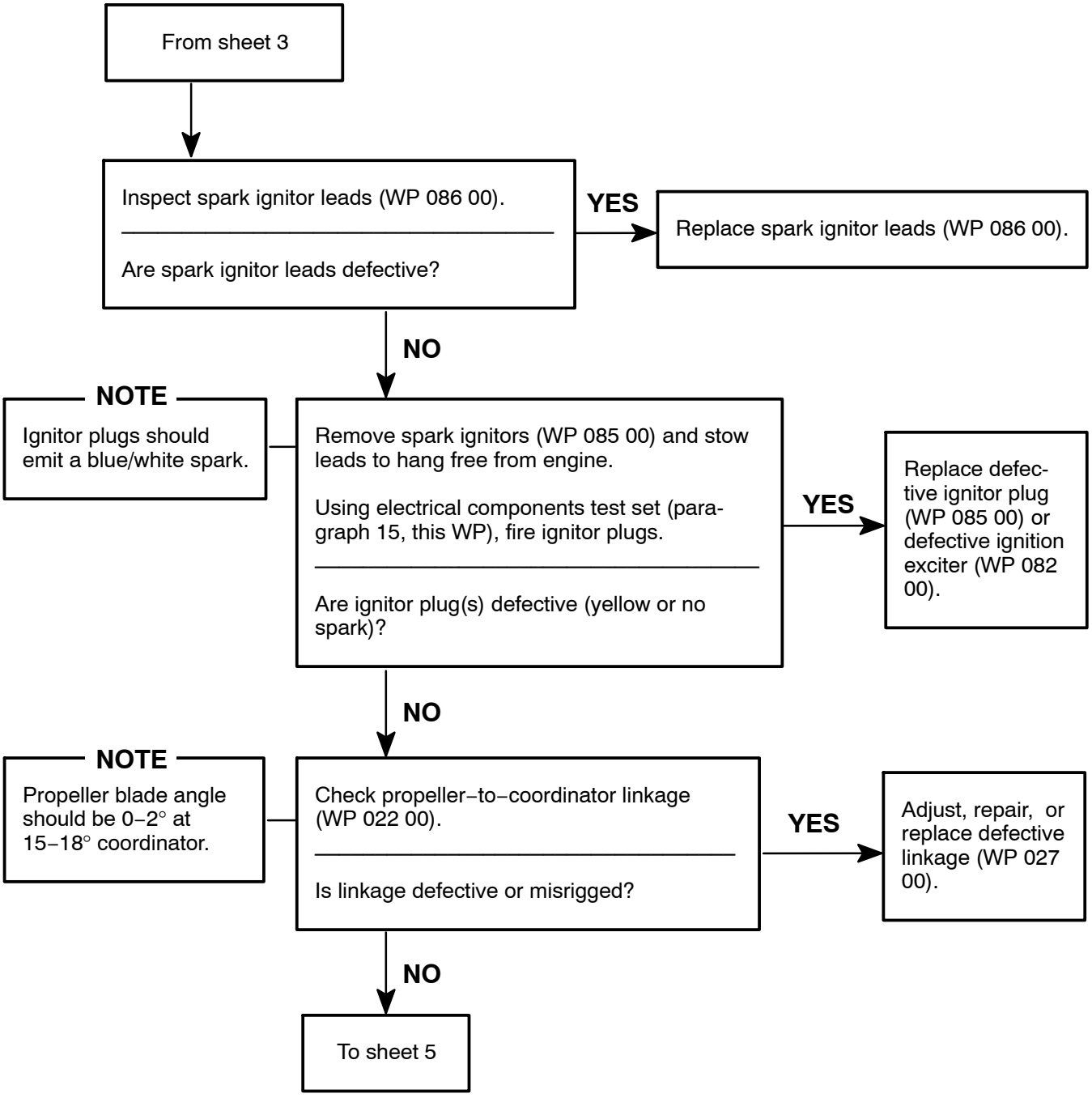

Figure 4. Engine Lights–off but Will Not Accelerate to Correct Speed (Sheet 4)

ENGINE START OR ACCELERATION TROUBLE

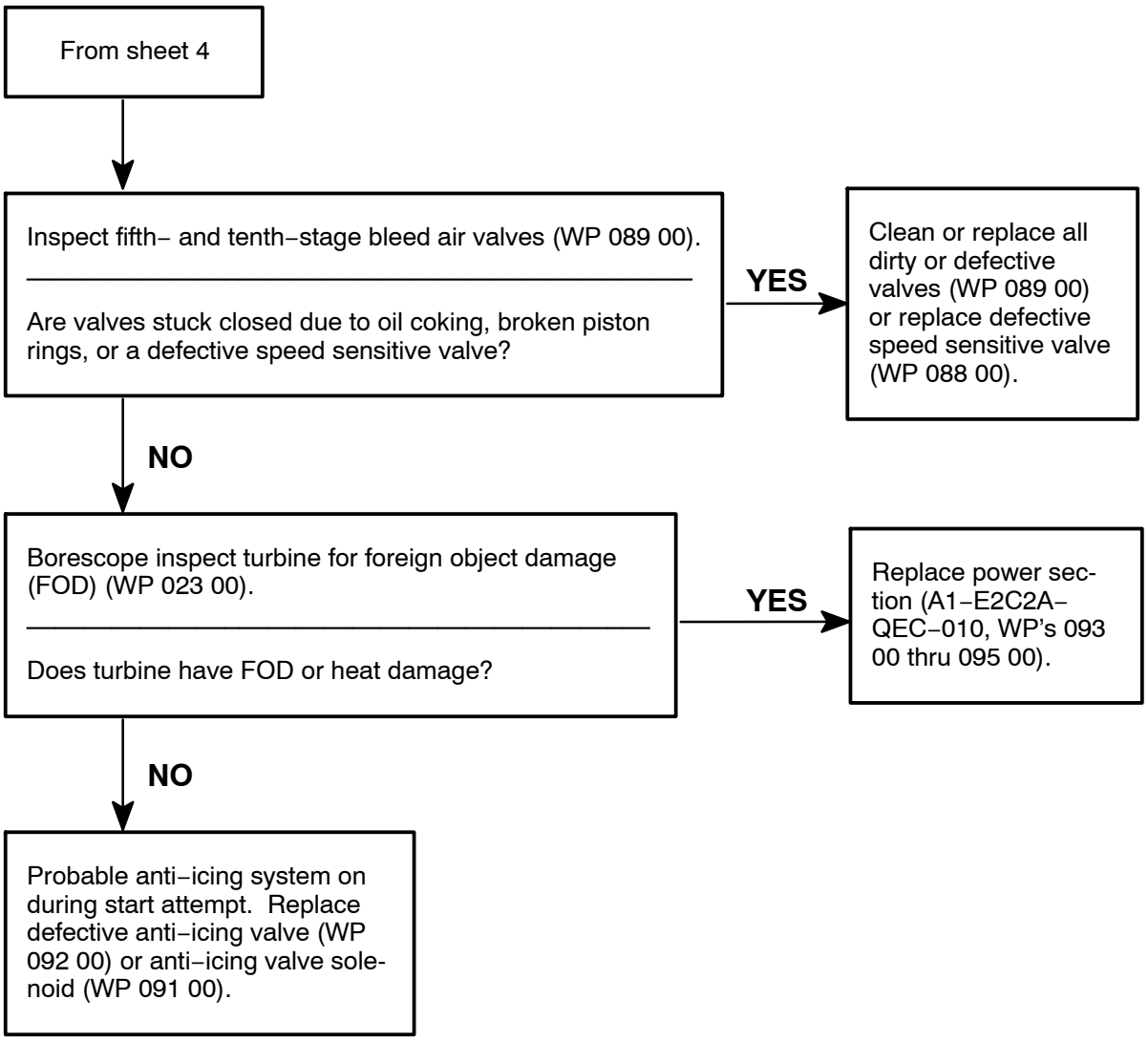

Figure 4. Engine lights–off but Will Not Accelerate to Correct Speed (Sheet 5)

ENGINE START OR ACCELERATION TROUBLE
AND
ENGINE TEMPERATURE TROUBLE

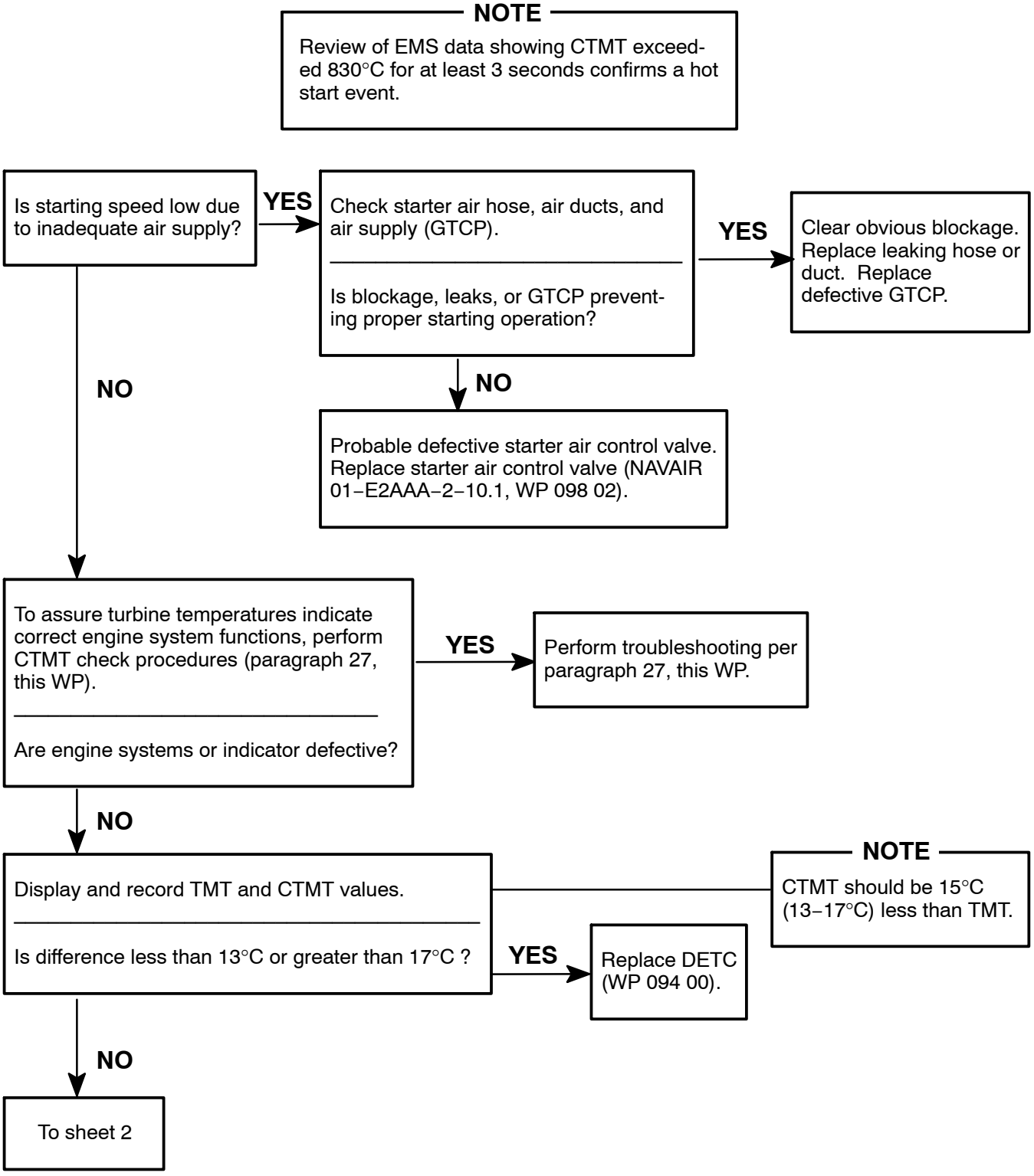

Figure 5. TMT Too High During Acceleration (Hot Start) or EMS Confirms CTMT Exceeds 830°C on Start (Sheet 1 of 5)

ENGINE START OR ACCELERATION TROUBLE
AND
ENGINE TEMPERATURE TROUBLE

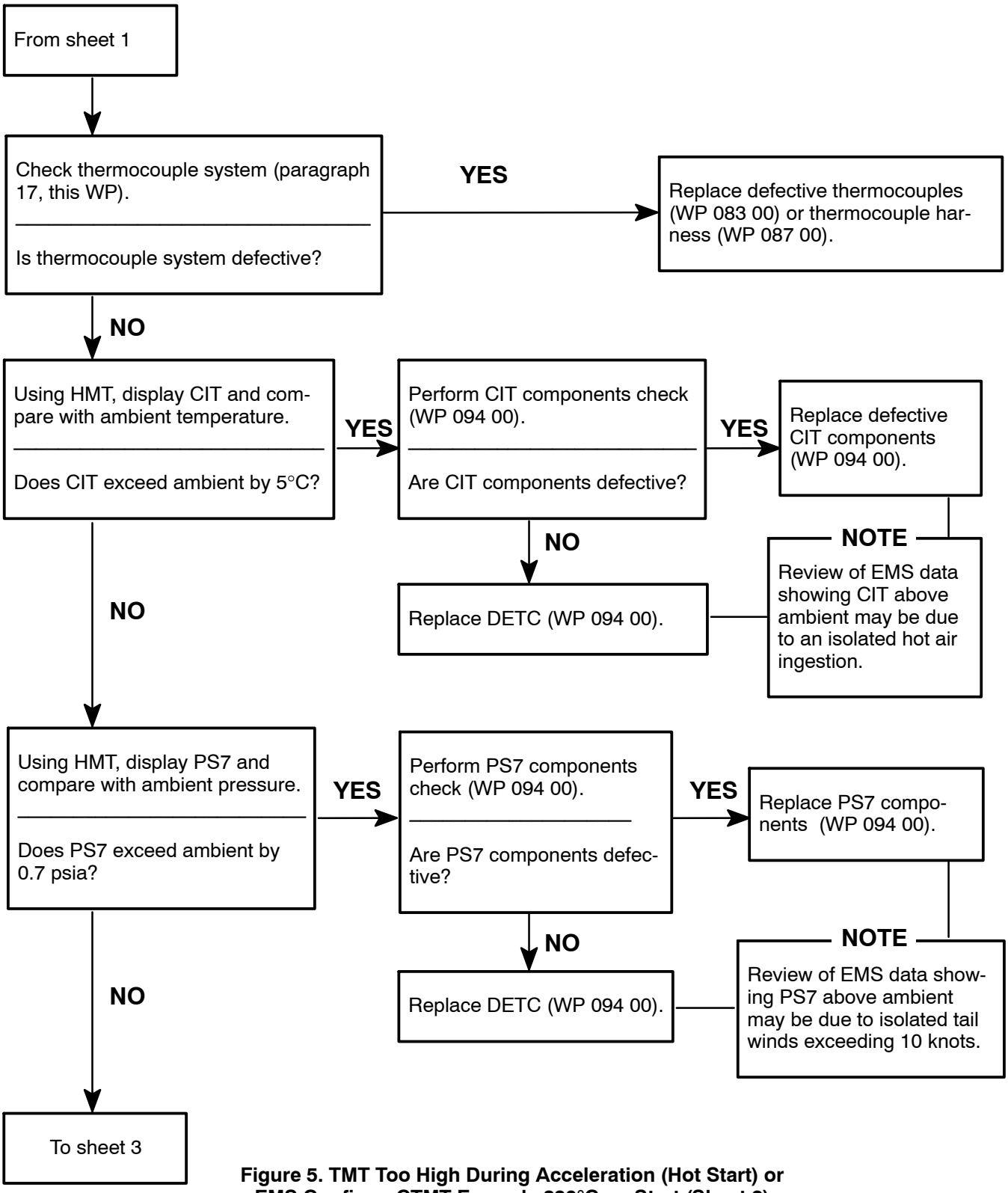

Figure 5. TMT Too High During Acceleration (Hot Start) or EMS Confirms CTMT Exceeds 830°C on Start (Sheet 2)

ENGINE START OR ACCELERATION TROUBLE
AND
ENGINE TEMPERATURE TROUBLE

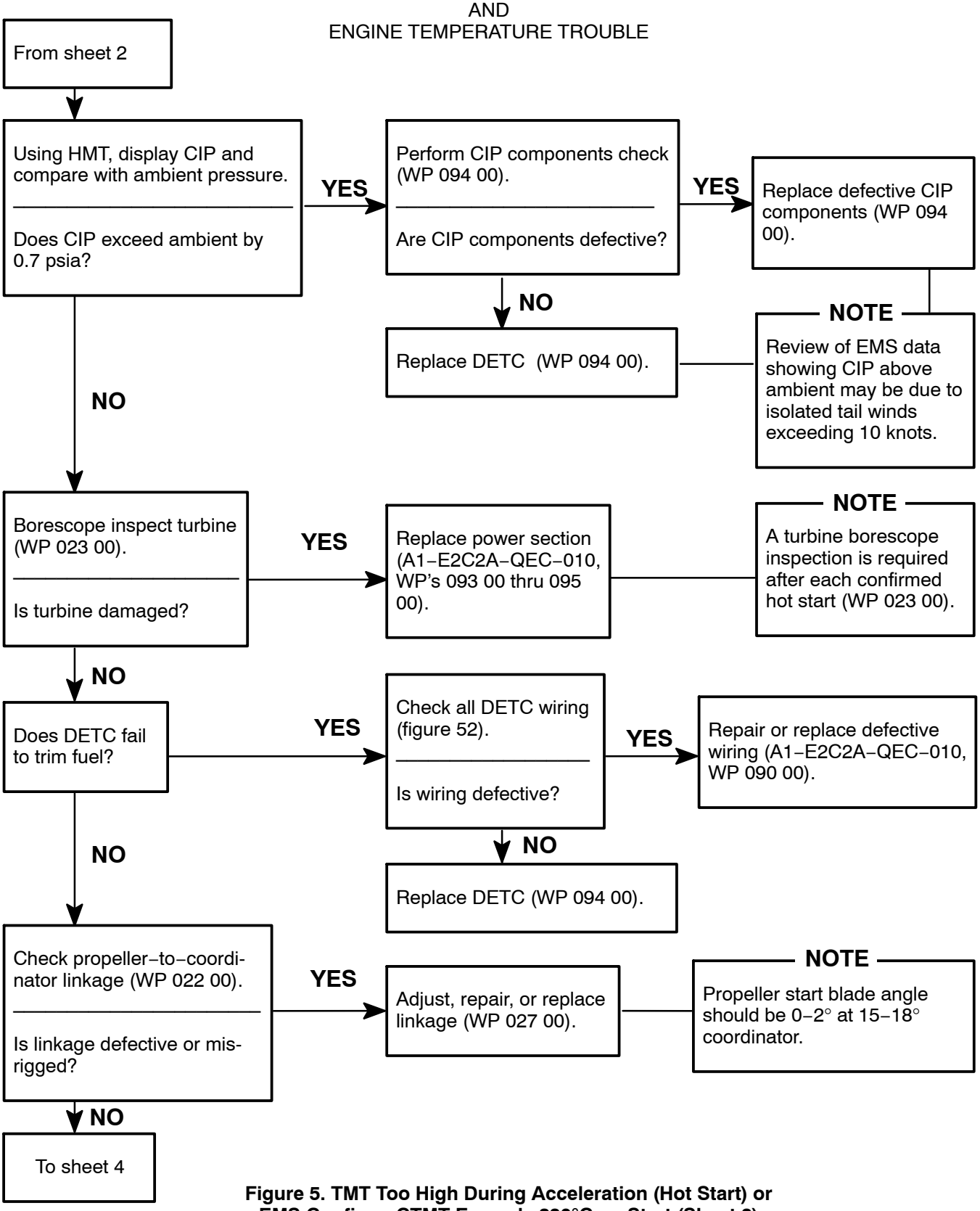

Figure 5. TMT Too High During Acceleration (Hot Start) or EMS Confirms CTMT Exceeds 830°C on Start (Sheet 3)

ENGINE START OR ACCELERATION TROUBLE
AND
ENGINE TEMPERATURE TROUBLE

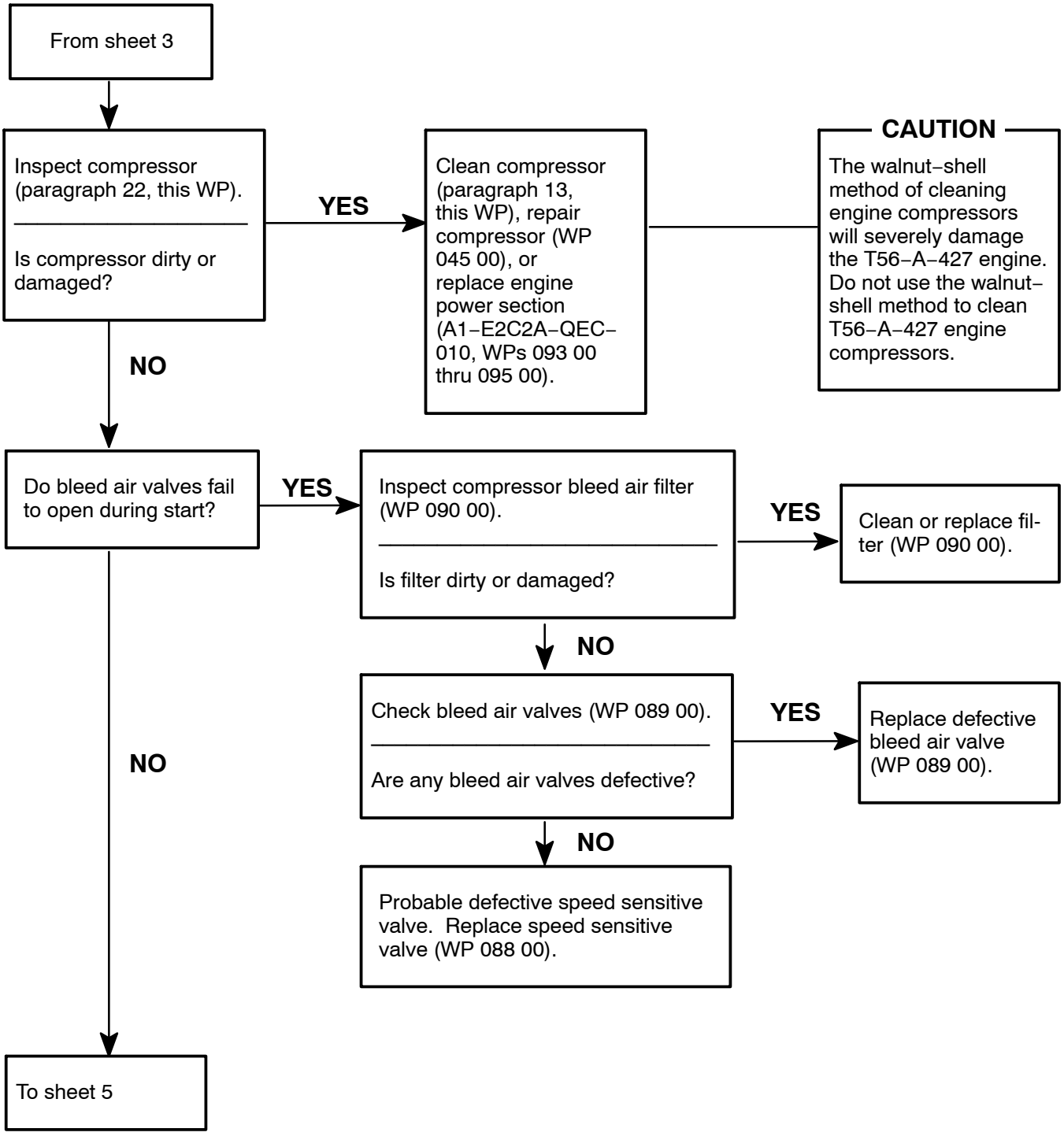

Figure 5. TMT Too High During Acceleration (Hot Start) or EMS Confirms CTMT Exceeds 830°C on Start (Sheet 4)

ENGINE START OR ACCELERATION TROUBLE
AND
ENGINE TEMPERATURE TROUBLE

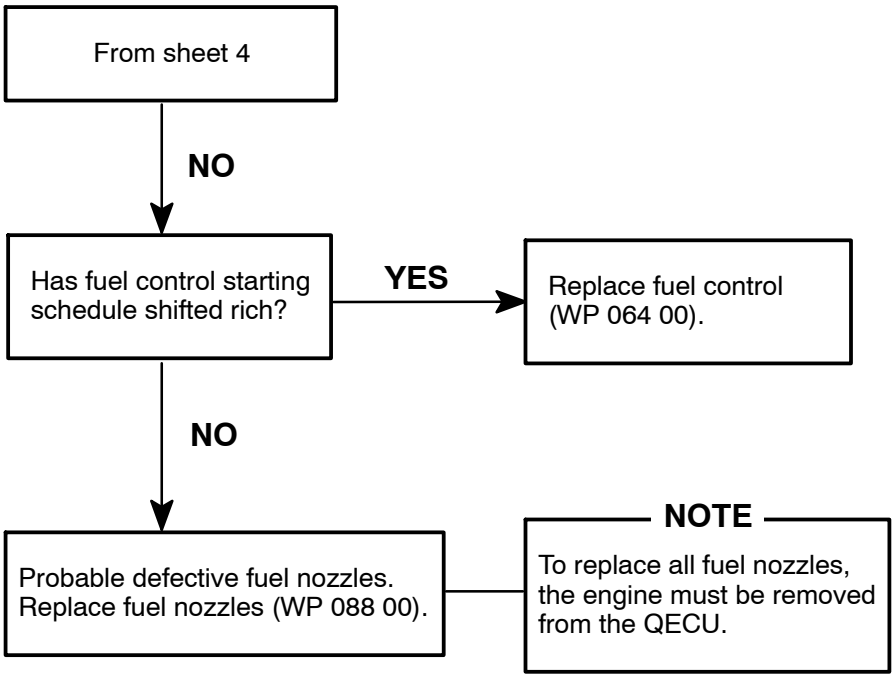

Figure 5. TMT Too High During Acceleration (Hot Start) or EMS Confirms CTMT Exceeds 830°C on Start (Sheet 5)

ENGINE START AND ACCELERATION TROUBLE
AND
ENGINE TEMPERATURE TROUBLE

NOTE

Acceleration rate to 16% in 8 seconds is desired. A cold start may cause torching in the combustion section and/or burning damage in the turbine unit. A borescope inspection is recommended after each cold start condition occurs.

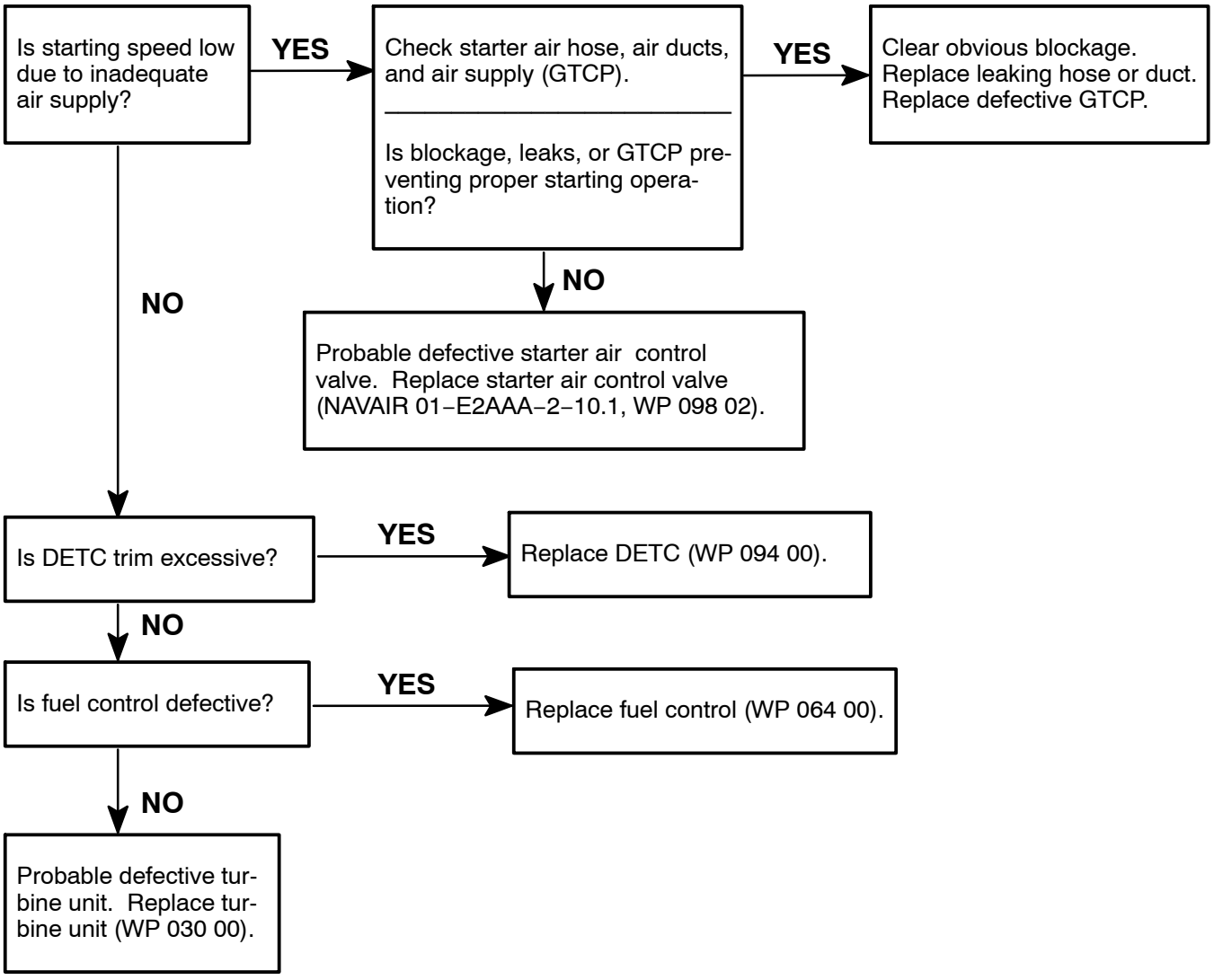

Figure 6. Starting Time Limit Exceeded While TMT Is Well Below Maximum (Cold Start)

ENGINE OPERATION TROUBLE

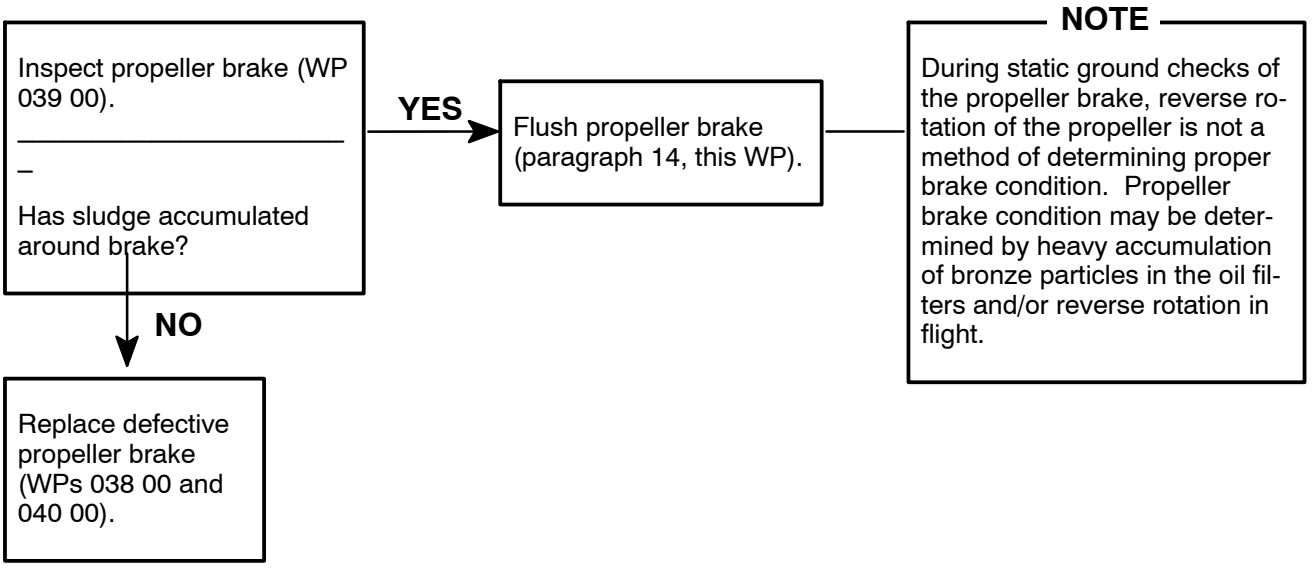

Figure 7. Propeller Rotates in Reverse Direction in Flight or on Test Stand

ENGINE RPM TROUBLE

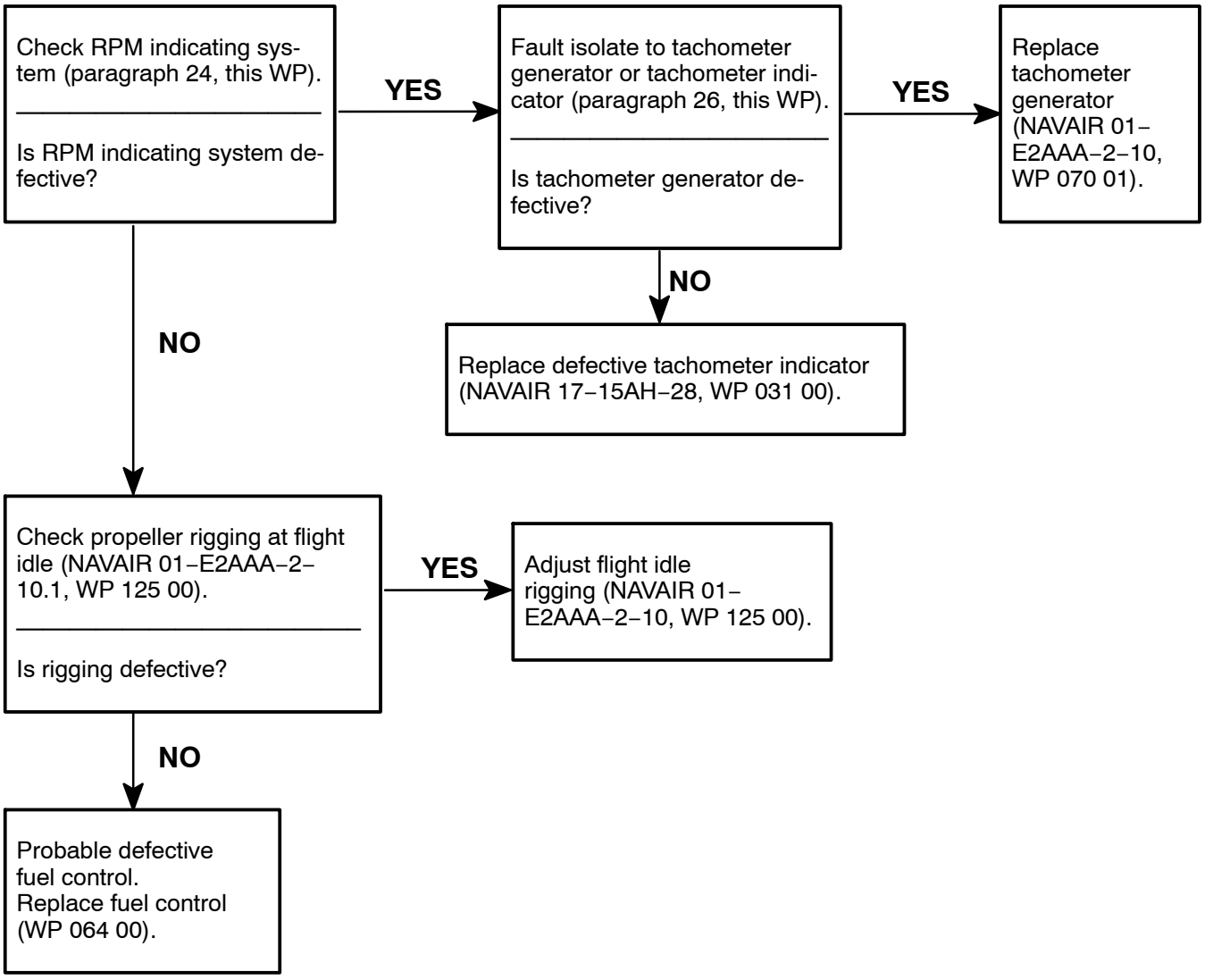

Figure 8. Low RPM at Ground Idle and/or Flight Idle

ENGINE RPM TROUBLE

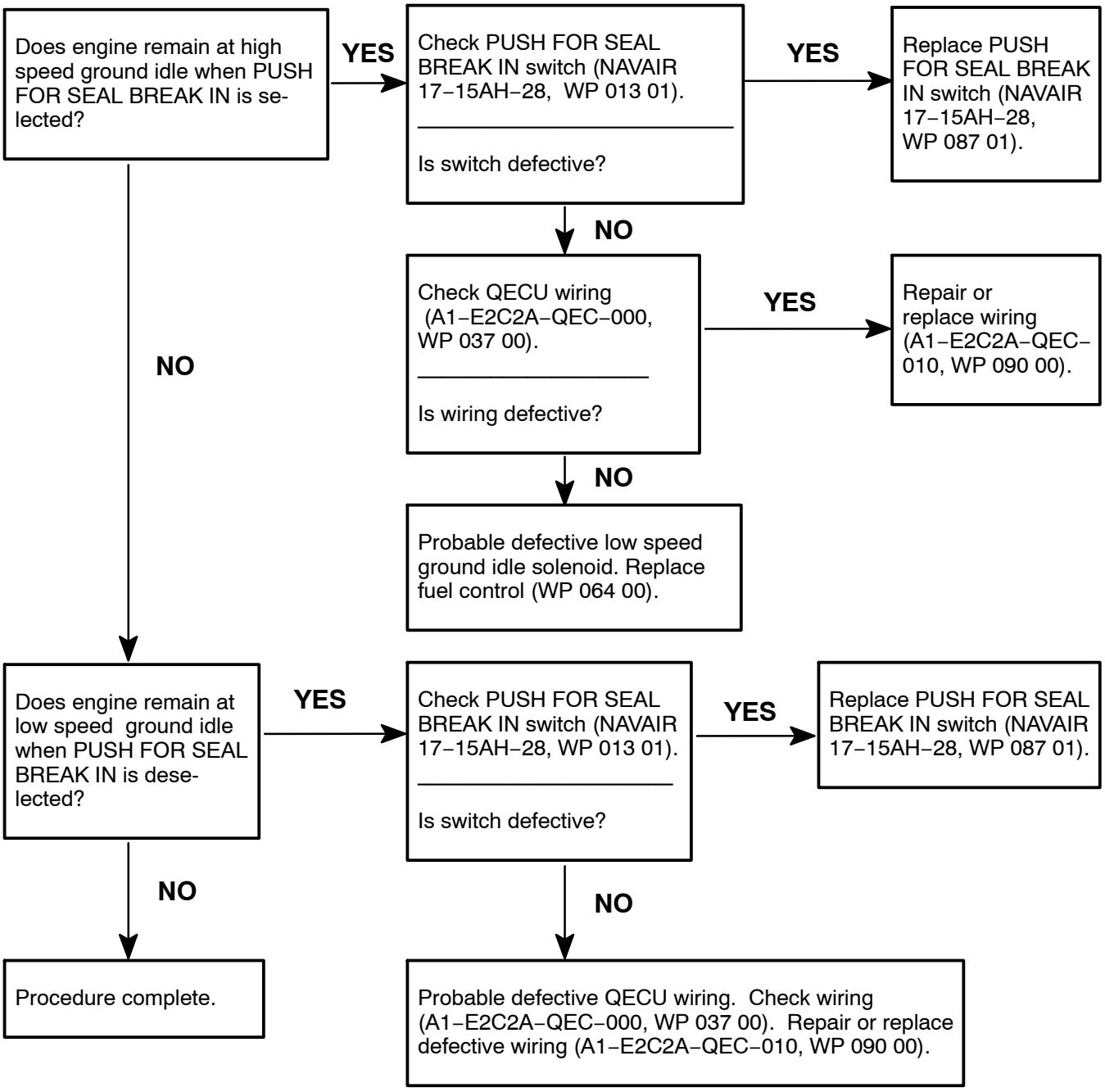

Figure 9. Ground Idle Speed Does Not Change When Selected

ENGINE START OR ACCELERATION TROUBLE

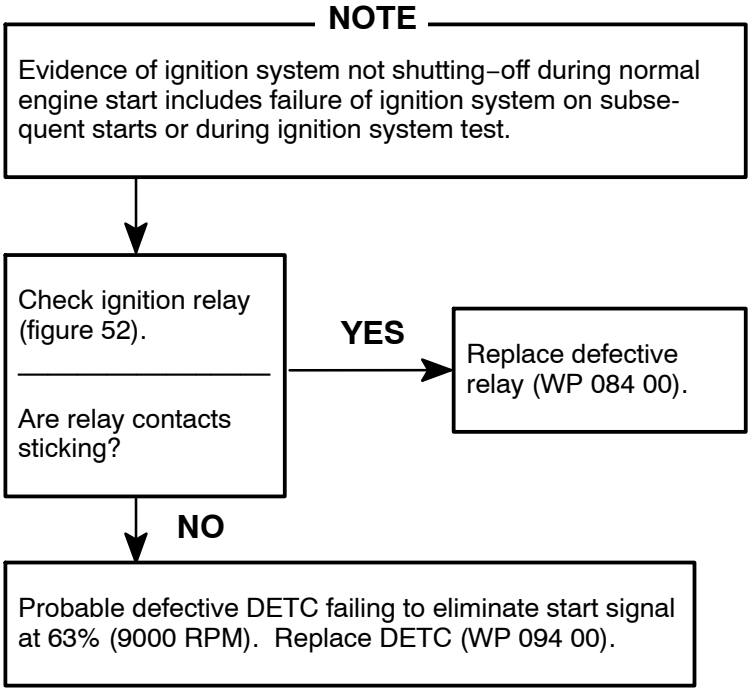

Figure 10. Ignition System Does Not Shut Off Electrically

ENGINE OIL TROUBLE

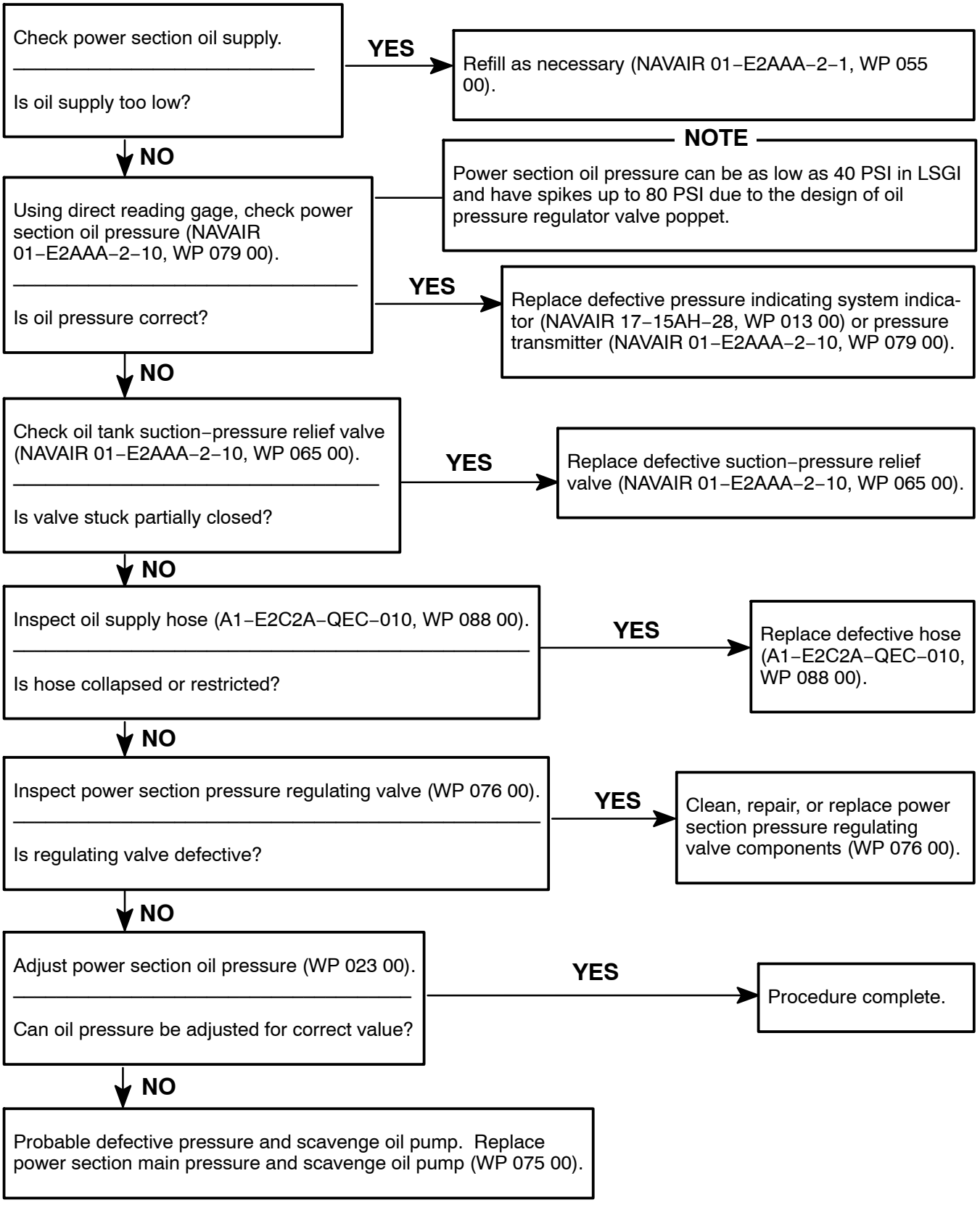

Figure 11. Power Section Oil Pressure Out of Limits at 100% RPM and at Normal TMT

ENGINE OIL TROUBLE

Using direct reading gage, check reduction gear unit oil pressure (NAVAIR 01–E2AAA–2–10, WP 079 00).

Is oil pressure correct?

YES → Replace defective pressure indicating system indicator (NAVAIR 17–15AH–28, WP 013 00) or pressure transmitter (NAVAIR 01–E2AAA–2–10, WP 079 00).

NO ↓

Check engine % RPM indication.

Is engine running below 100%?

YES → Adjust engine speed to 100% and check reduction gear unit pressure.

NO ↓

Check oil tank suction–pressure relief valve (NAVAIR 01–E2AAA–2–10, WP 065 00).

Is valve stuck partially closed?

YES → Replace defective suction–pressure relief valve (NAVAIR 01–E2AAA–2–10, WP 065 00).

NO ↓

Inspect oil supply hose (A1–E2C2A–QEC–010, WP 088 00).

Is hose collapsed or restricted?

YES → Replace defective hose (A1–E2C2A–QEC–010, WP 088 00).

NO ↓

Adjust reduction gear unit oil pressure (WP 023 00).

Can oil pressure be adjusted for correct value?

NOTE

Reduction gear unit oil pressure can only be adjusted to increase pressure.

YES → Procedure complete.

NO ↓

Inspect reduction gear unit oil pump components (WP 070 00).

Are components defective?

YES → Clean, repair, or replace reduction gear unit oil pump components (WP 070 00).

NO ↓

If pressure is below limit, replace oil pump (WP 070 00).
If pressure is above limit, replace reduction gear unit (WP 027 00).

Figure 12. Reduction Gear Unit Oil Pressure Out of Limits at 100% RPM and at Normal TMT

ENGINE OIL TROUBLE

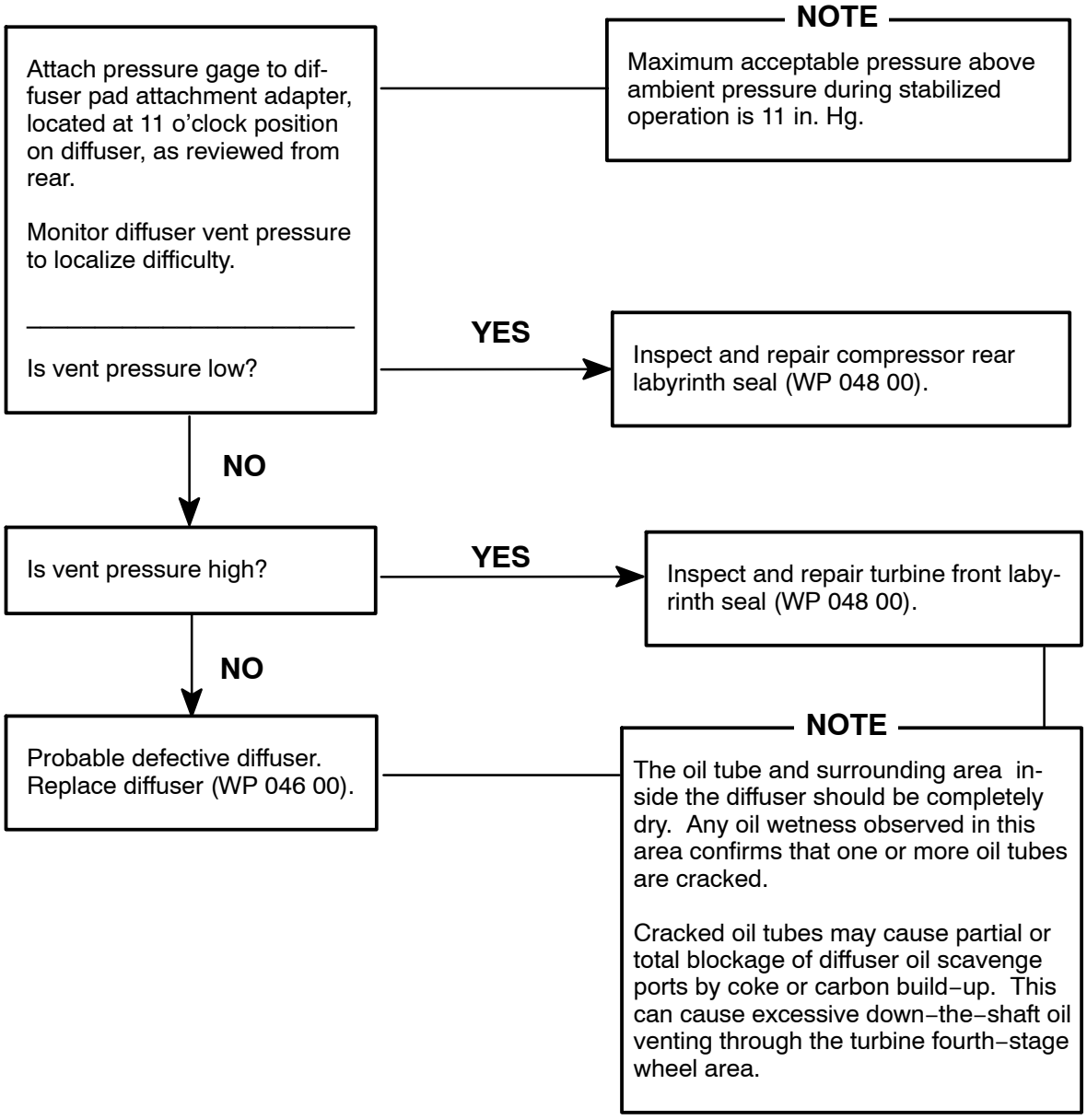

Figure 13. Excessive Oil Spewing From Diffuser Vents

ENGINE OIL TROUBLE

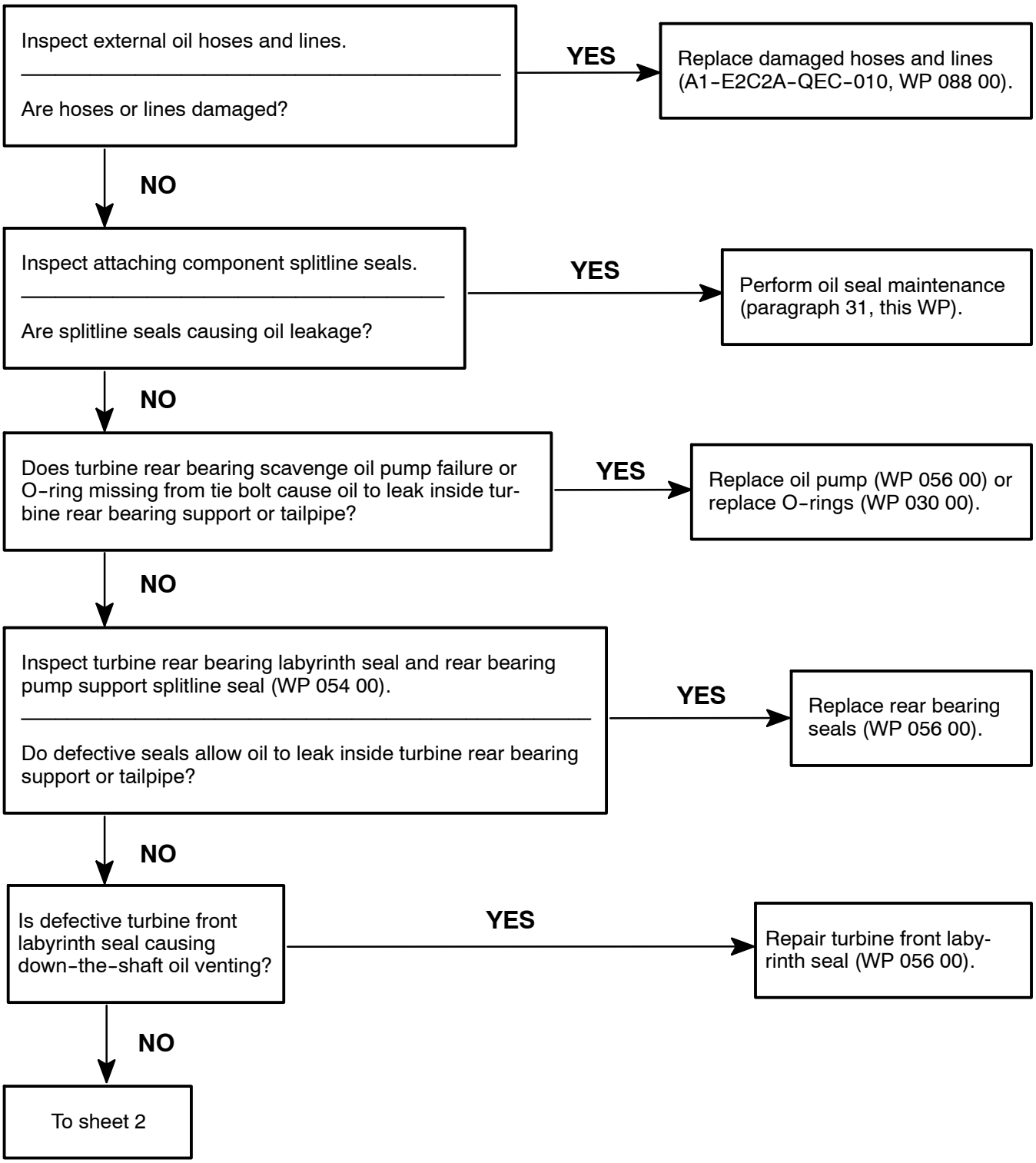

Figure 14. Excessive Oil Consumption (Sheet 1 of 3)

ENGINE OIL TROUBLE

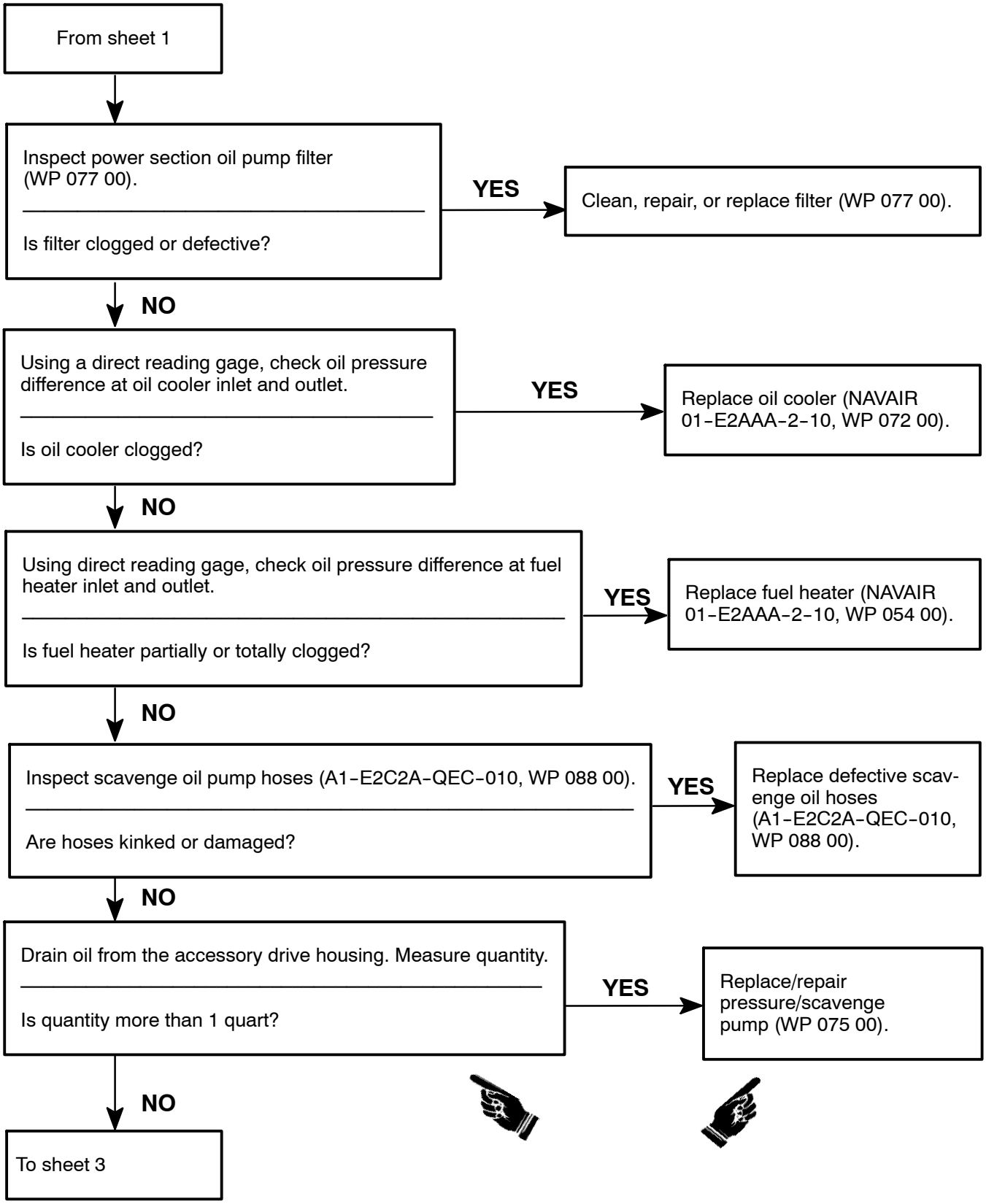

Figure 14. Excessive Oil Consumption (Sheet 2)

ENGINE OIL TROUBLE

From sheet 2

Drain oil from both external scavenge pump lines. Measure quantity.

Is quantity more than 1 pint?

YES → Replace/repair external scavenge pump (WP 078 00).

NO ↓

Drain oil from Reduction Gear Assembly. Measure quantity.

Is quantity more than 2.5 quarts?

YES → Replace/repair external scavenge pump (WP 078 00).

NO ↓

Inspect diffuser side vents (WP 049 00).

Is oil (usually associated with high lighthouse pressure) leaking from side vents?

YES → Perform steps of figure 13.

NOTE

Lighthouse refers to combustion chamber inner casing and liner.

NO ↓

Remove lower aircraft bleed air tubes from diffuser bleed ports. Using bright light, inspect diffuser oil tubes through fourteenth-stage diffuser bleed ports.

Are oil tubes cracked or is wetness observed in diffuser area?

NOTE

The oil tubes and surrounding area inside the diffuser should be completely dry. Any oil wetness observed in this area confirms that one or more oil tubes are cracked.

Cracked oil tubes may cause partial or total blockage of diffuser oil scavenge ports by coke or carbon build-up. This can cause excessive down-the-shaft oil venting through the turbine fourth-stage wheel area.

YES → Replace diffuser (WP 046 00).

NO ↓

Inspect combustion chamber liners (WP 051 00).

Are inner casings and/or liners cracked?

YES → Replace inner casings or liners (WP 051 00).

NO ↓

Probable oil leak at turbine inlet casing 3 o'clock and 9 o'clock struts. Replace or repair seals (WP 046 00 or WP 055 00).

Figure 14. Excessive Oil Consumption (Sheet 3)

ENGINE OIL TROUBLE

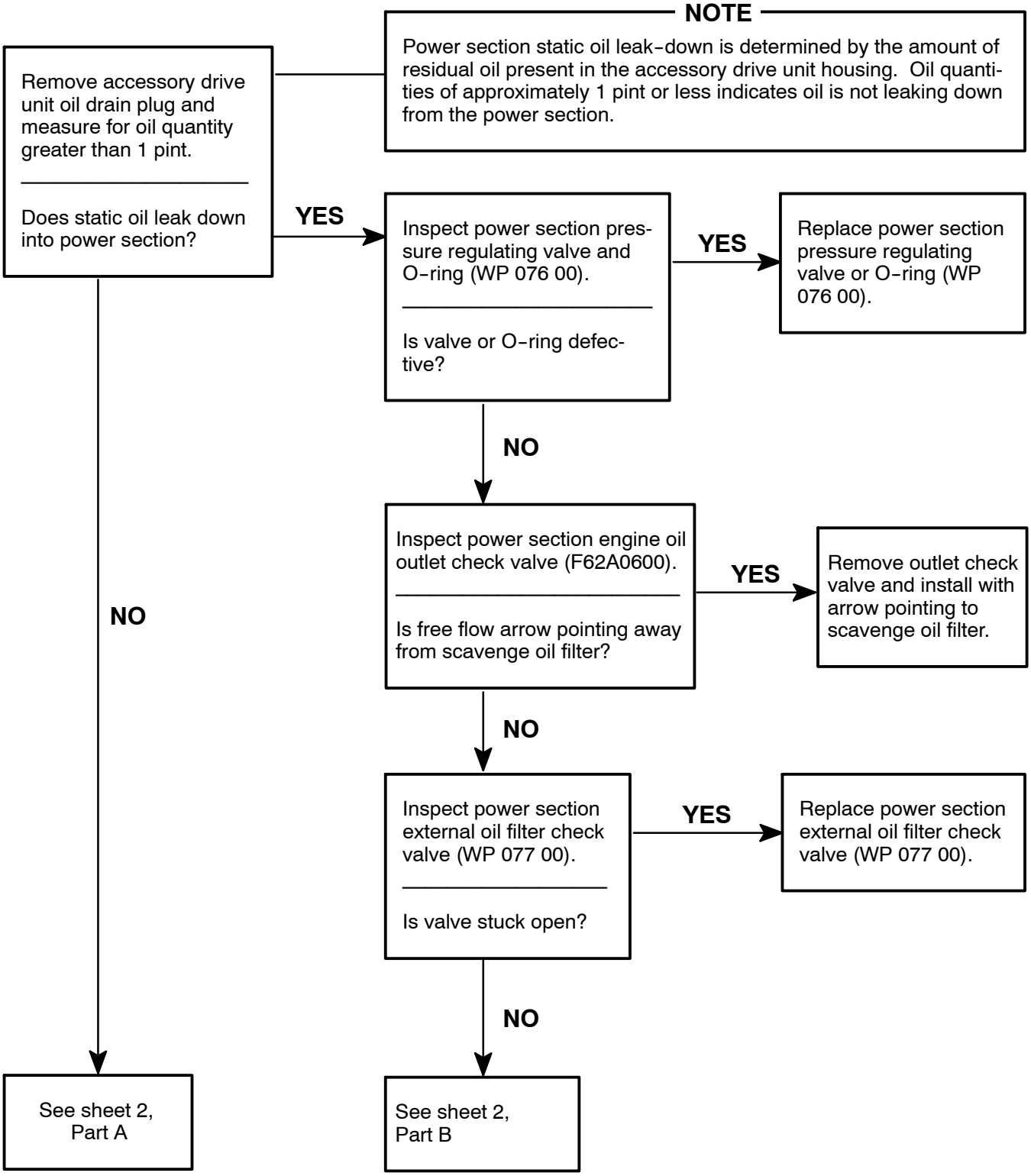

Figure 15. Power Section or Reduction Gear Unit Filled With Oil (Static Oil Leak-down) (Sheet 1 of 3)

ENGINE OIL TROUBLE

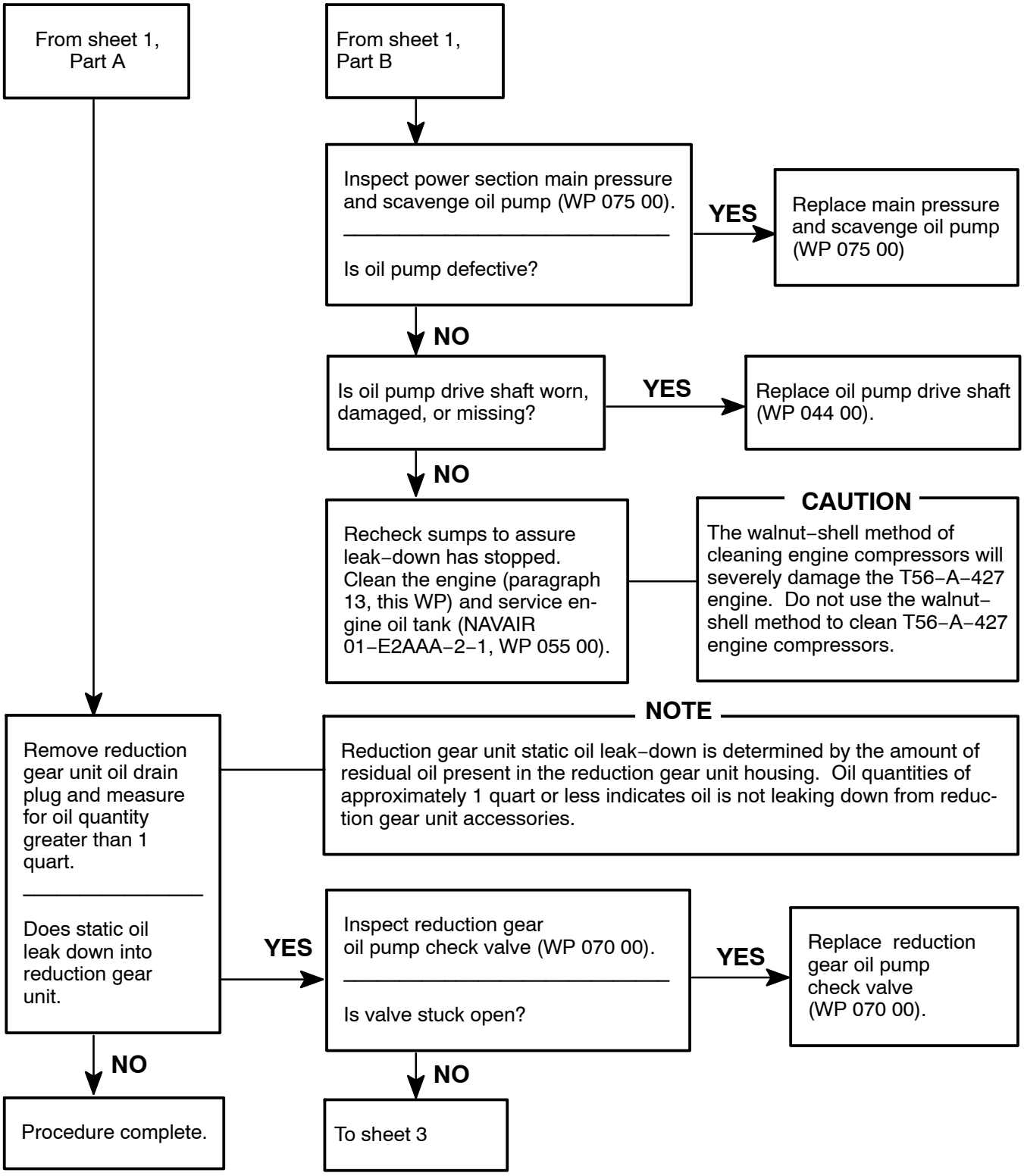

Figure 15. Power Section or Reduction Gear Unit Filled With Oil (Static Oil Leak–down) (Sheet 2)

ENGINE OIL TROUBLE

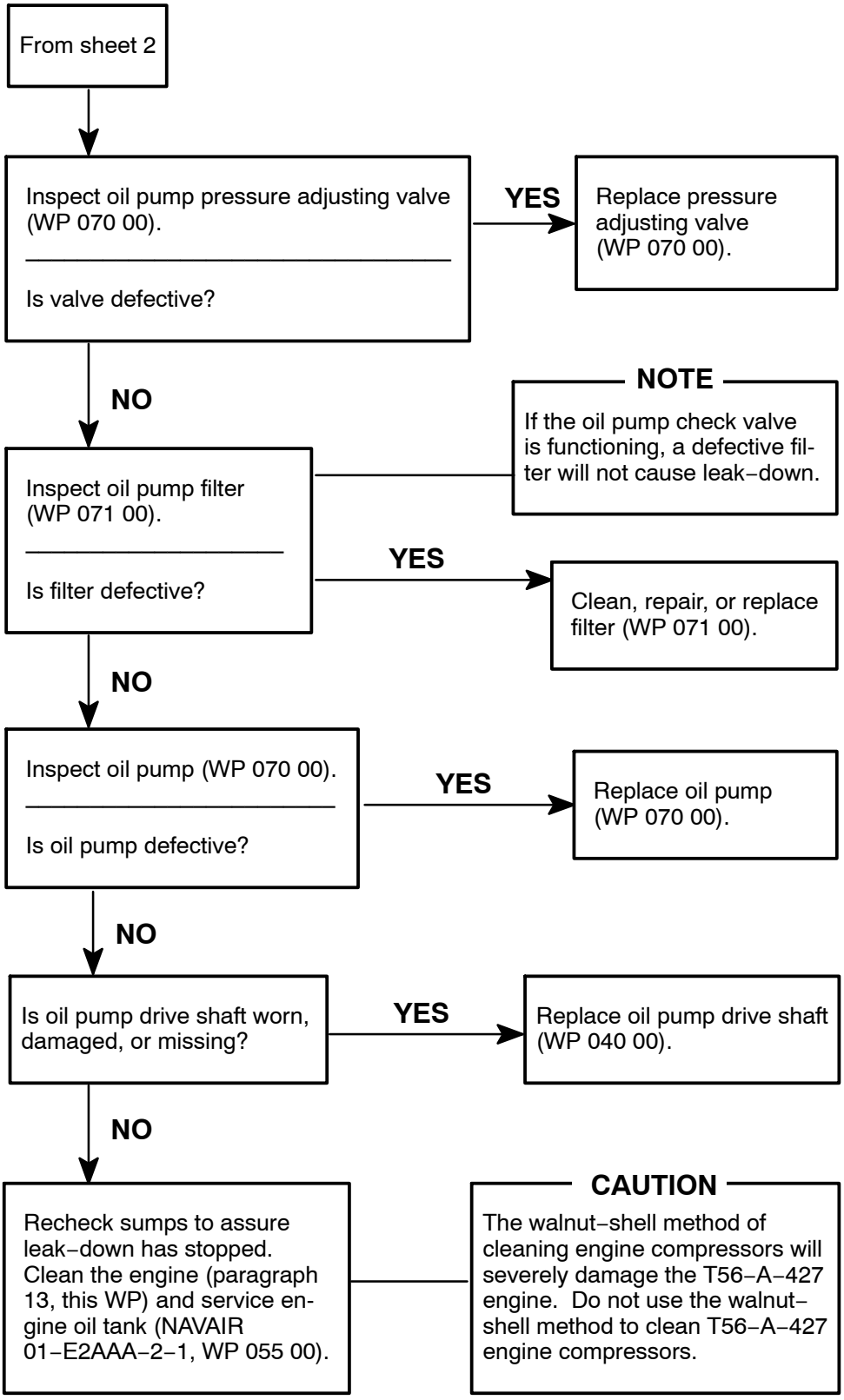

Figure 15. Power Section or Reduction Gear Unit Filled With Oil (Static Oil Leak–down) (Sheet 3)

ENGINE START OR ACCELERATION TROUBLE AND ENGINE RPM TROUBLE

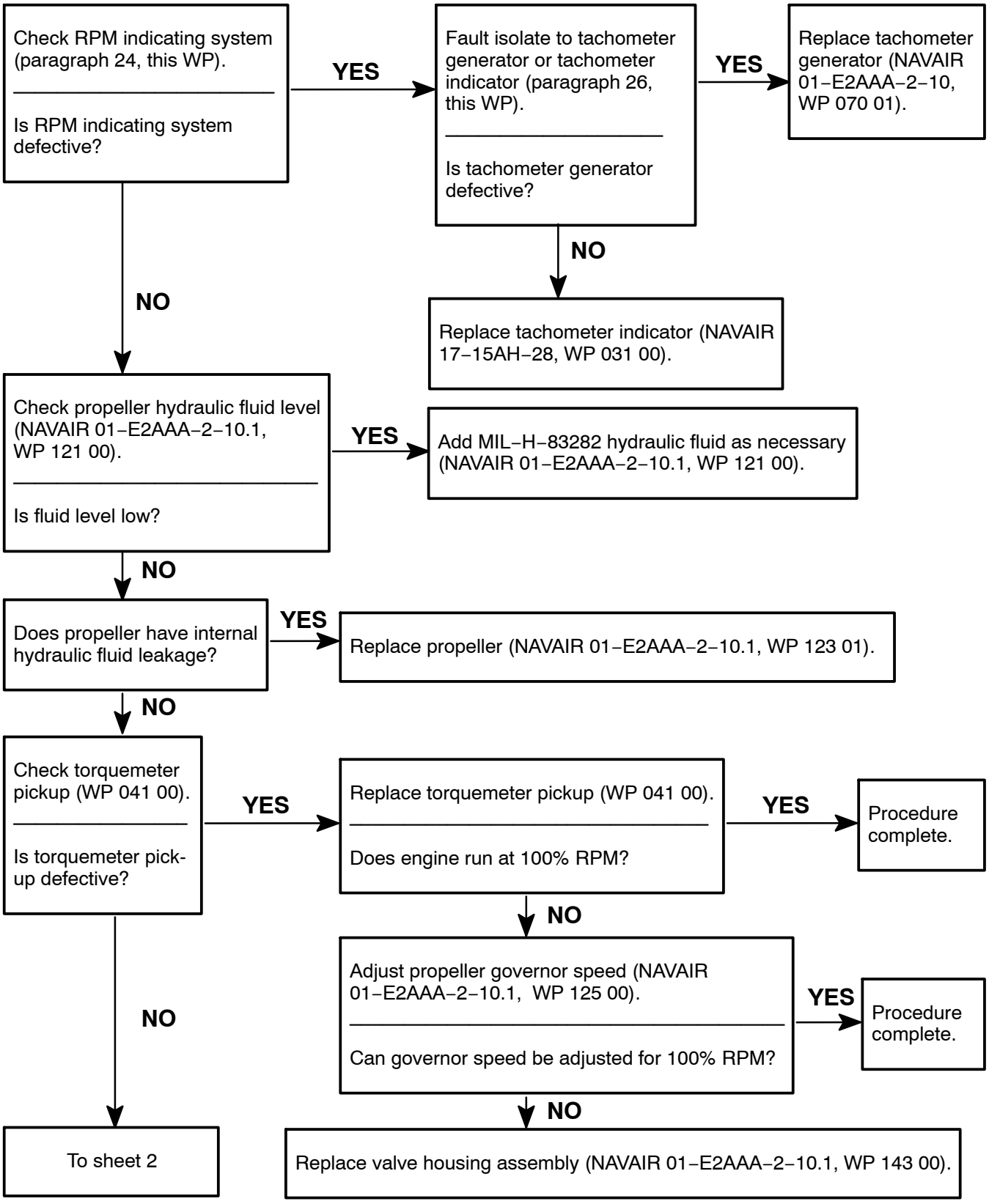

Figure 16. Engine Unable to Reach Maximum Controlled Speed of 100% (14,239 RPM) (Sheet 1 of 2)

ENGINE START AND ACCELERATION TROUBLE
OR
ENGINE RPM TROUBLE

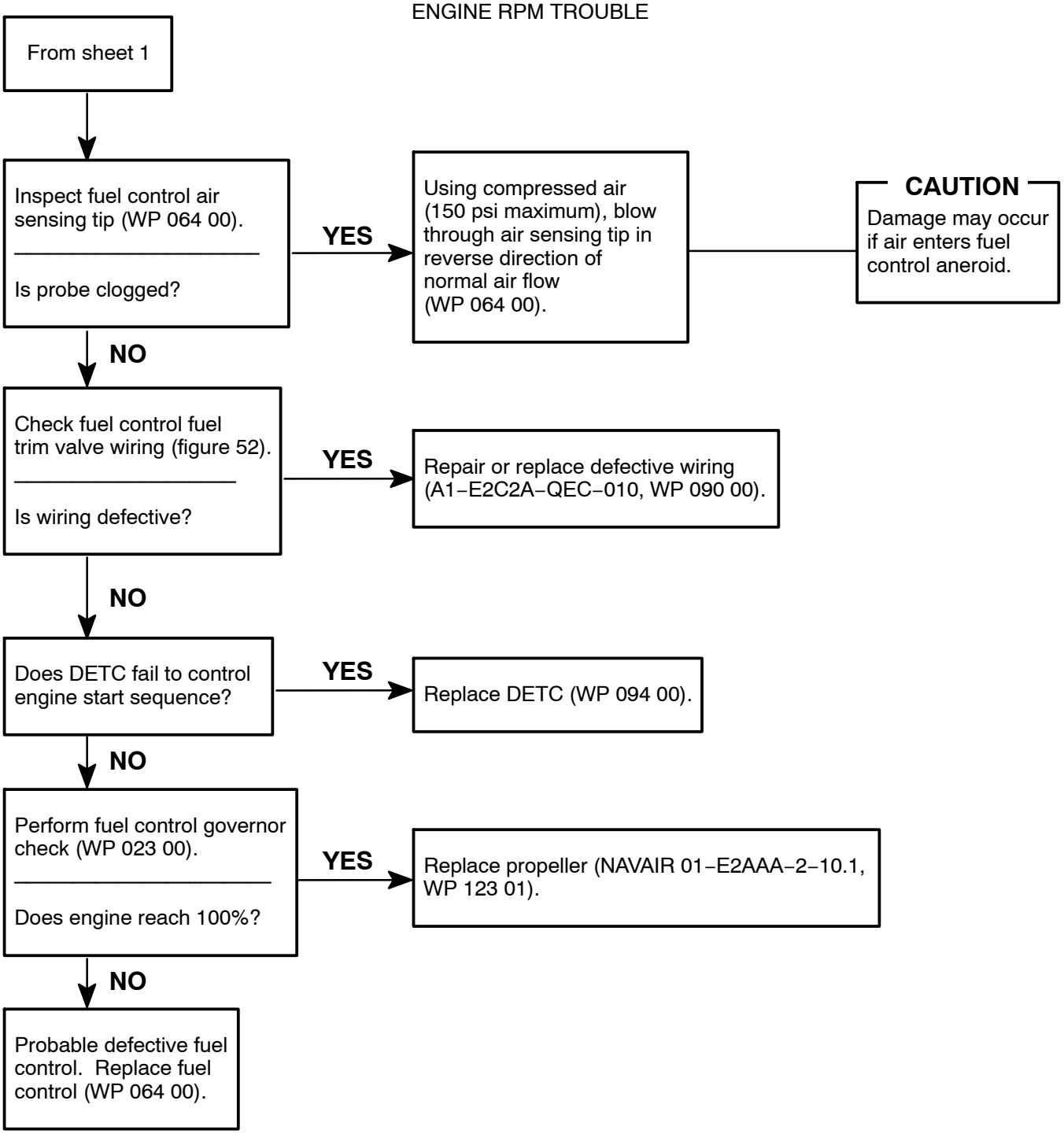

Figure 16. Engine Unable to Reach Maximum Controlled Speed of 100% (14,239 RPM) (Sheet 2)

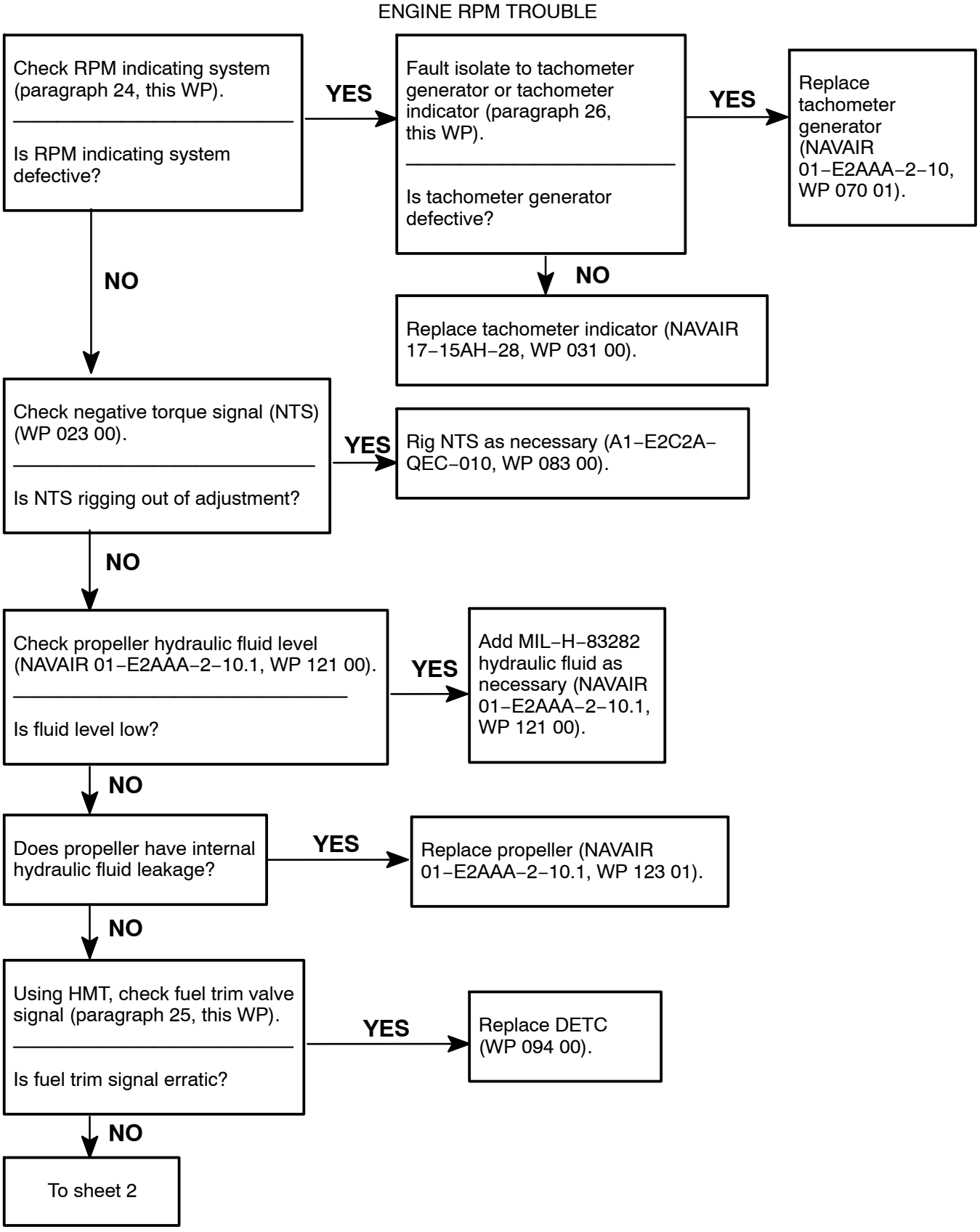

Figure 17. Hunting (RPM Fluctuation) (Sheet 1 of 2)

ENGINE RPM TROUBLE

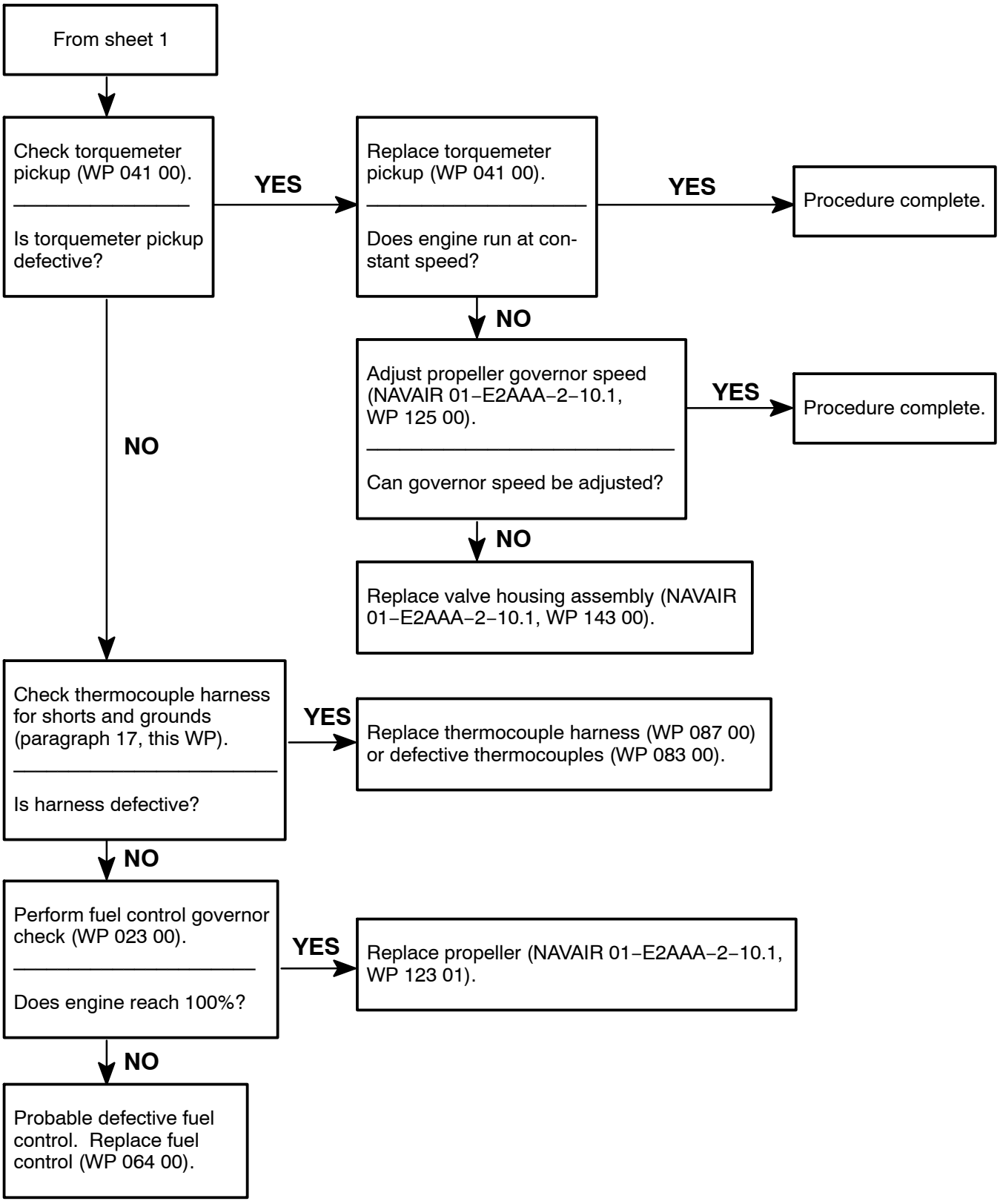

Figure 17. Hunting (RPM Fluctuation) (Sheet 2)

ENGINE RPM TROUBLE

NOTE

Review of EMS data showing RPM exceeded 14,524 (102%) for two minutes confirms an overspeed event.

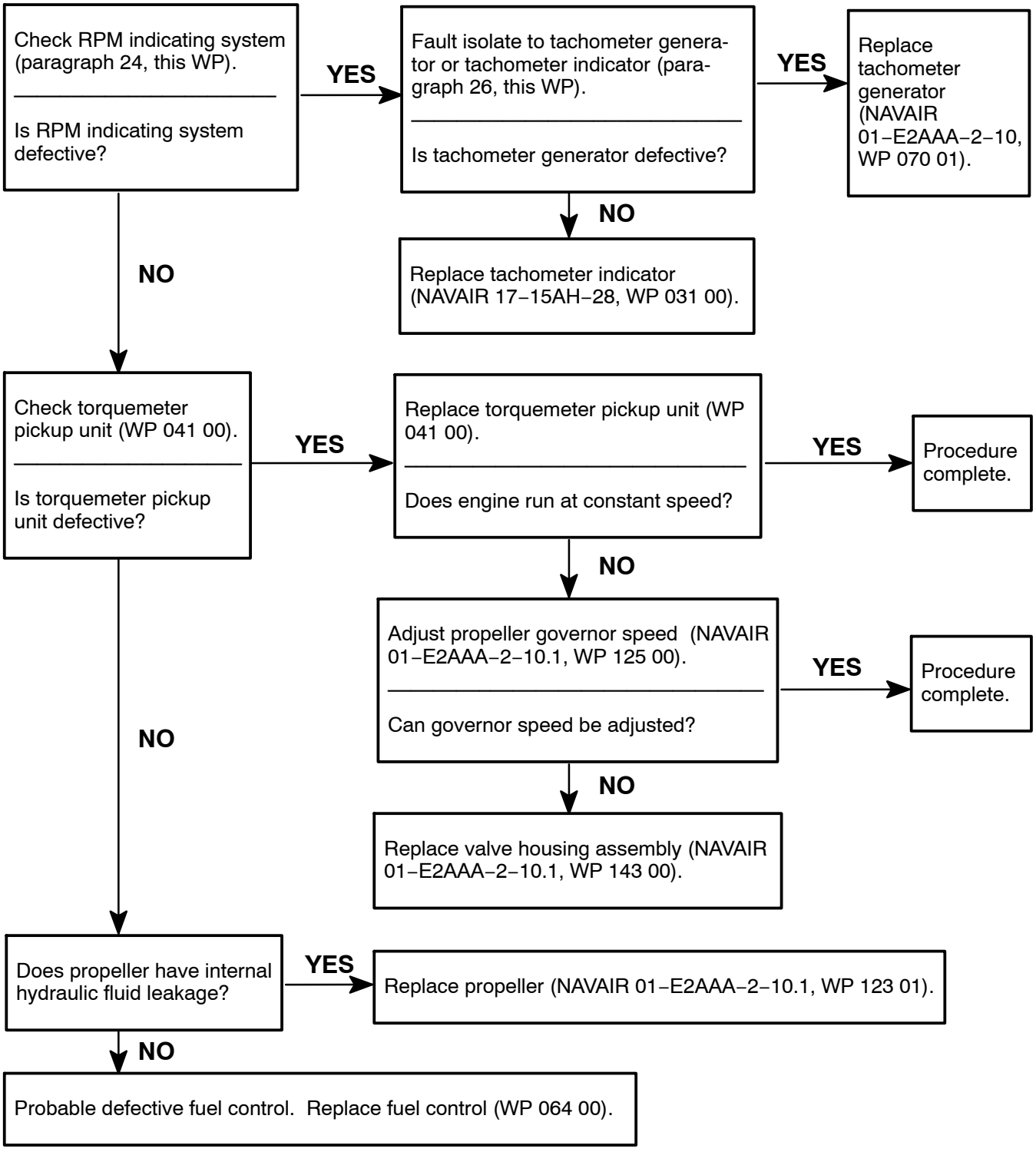

Figure 18. Engine Overspeeds or EMS Confirms RPM Exceeds 14,524

ENGINE TEMPERATURE TROUBLE

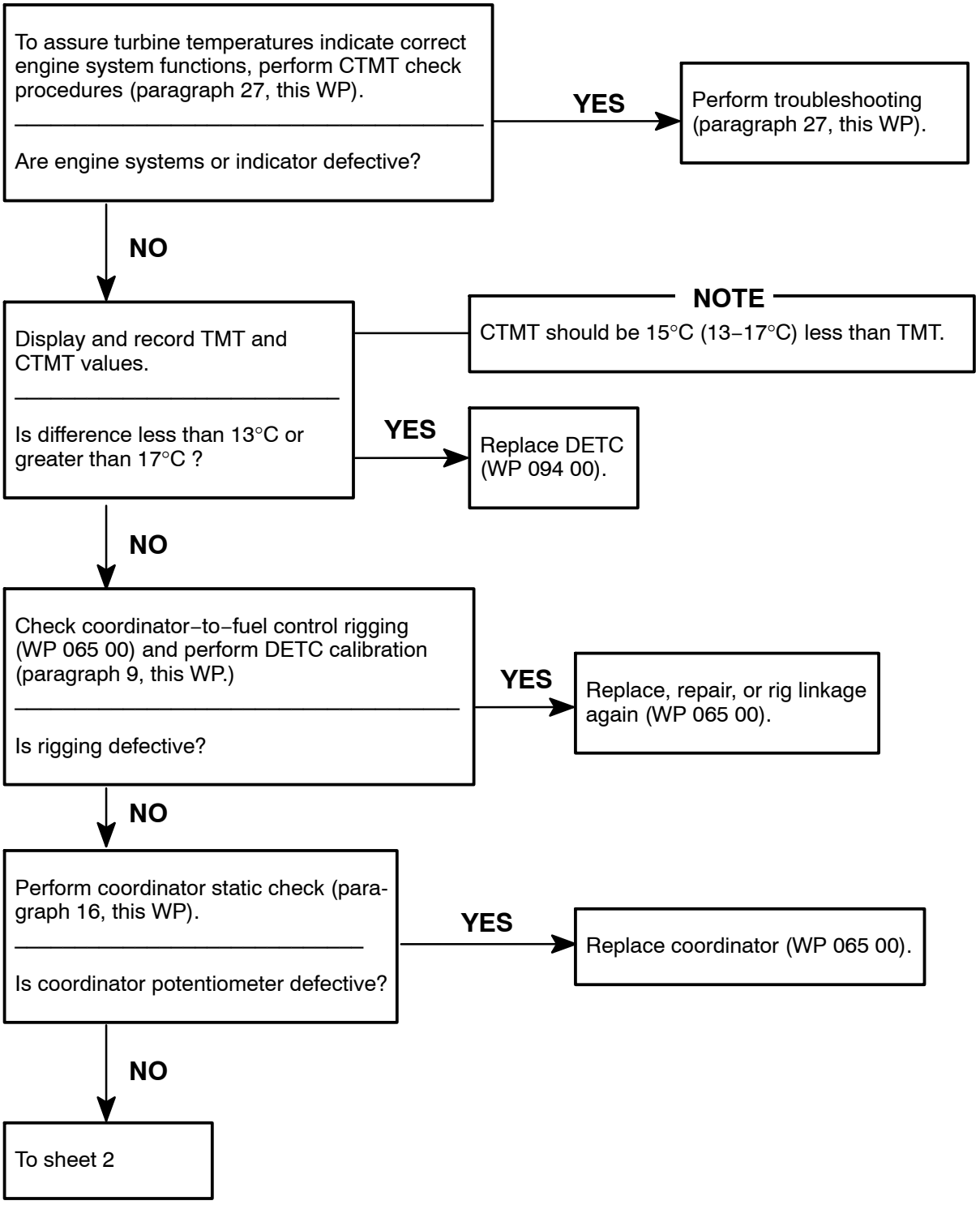

Figure 19. Unable to Obtain Correct Maximum TMT With DETC Switch in CONTROL or LIMIT Positions (Sheet 1 of 2)

ENGINE TEMPERATURE TROUBLE

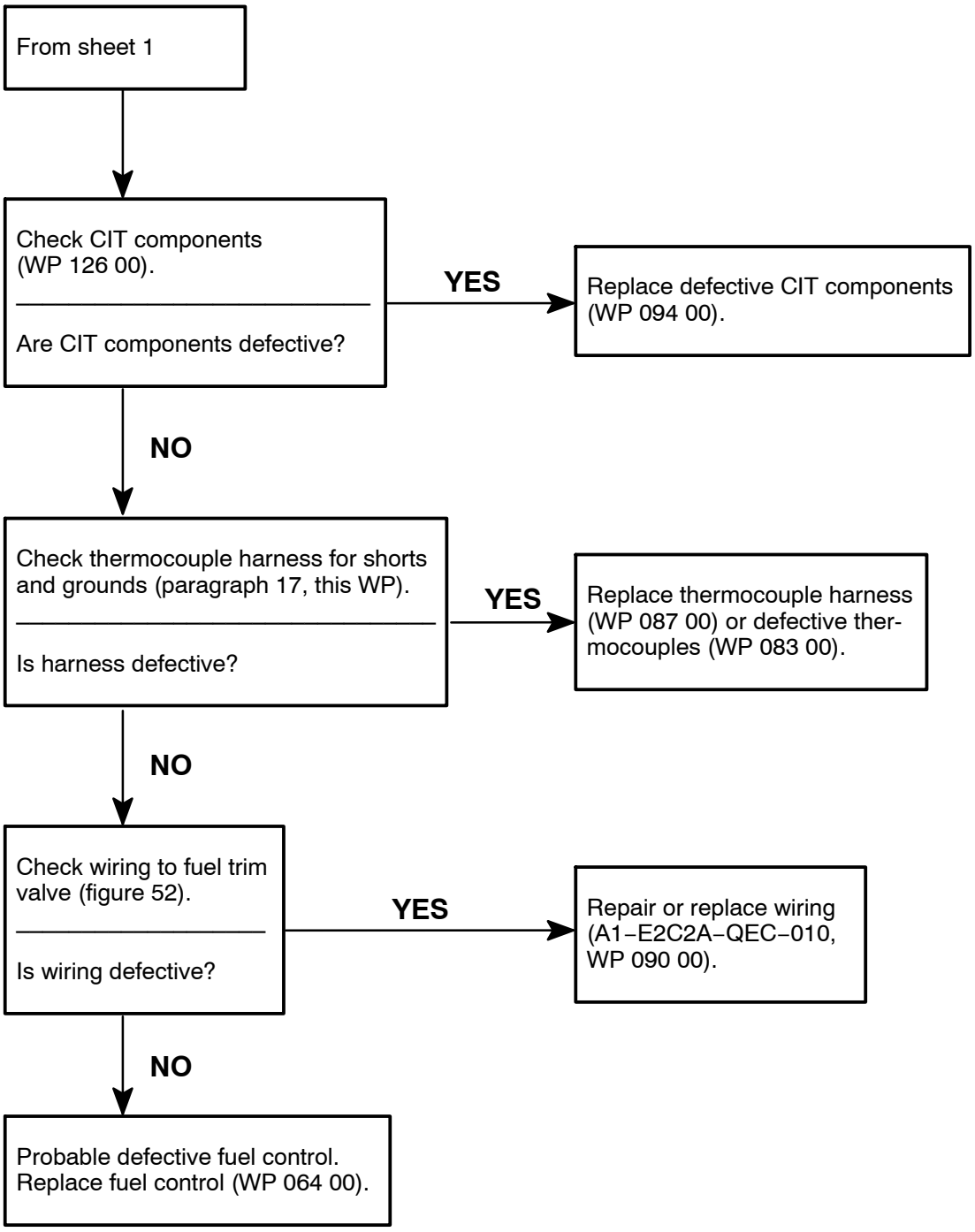

Figure 19. Unable to Obtain Correct Maximum TMT With DETC Switch in CONTROL or LIMIT Positions (Sheet 2)

ENGINE TEMPERATURE TROUBLE

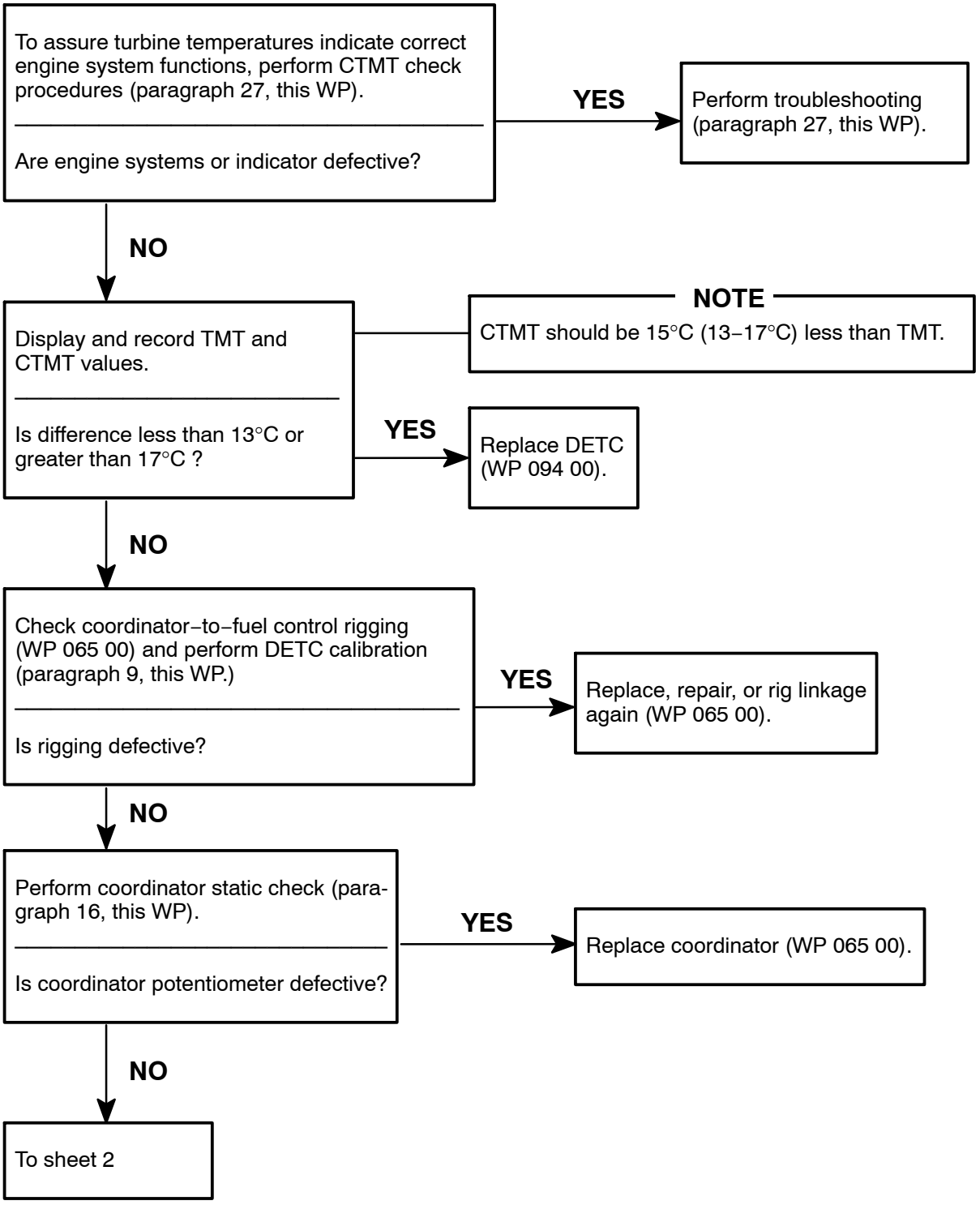

Figure 20. Excessive TMT With DETC Switch in CONTROL or LIMIT Positions (Sheet 1 of 2)

ENGINE TEMPERATURE TROUBLE

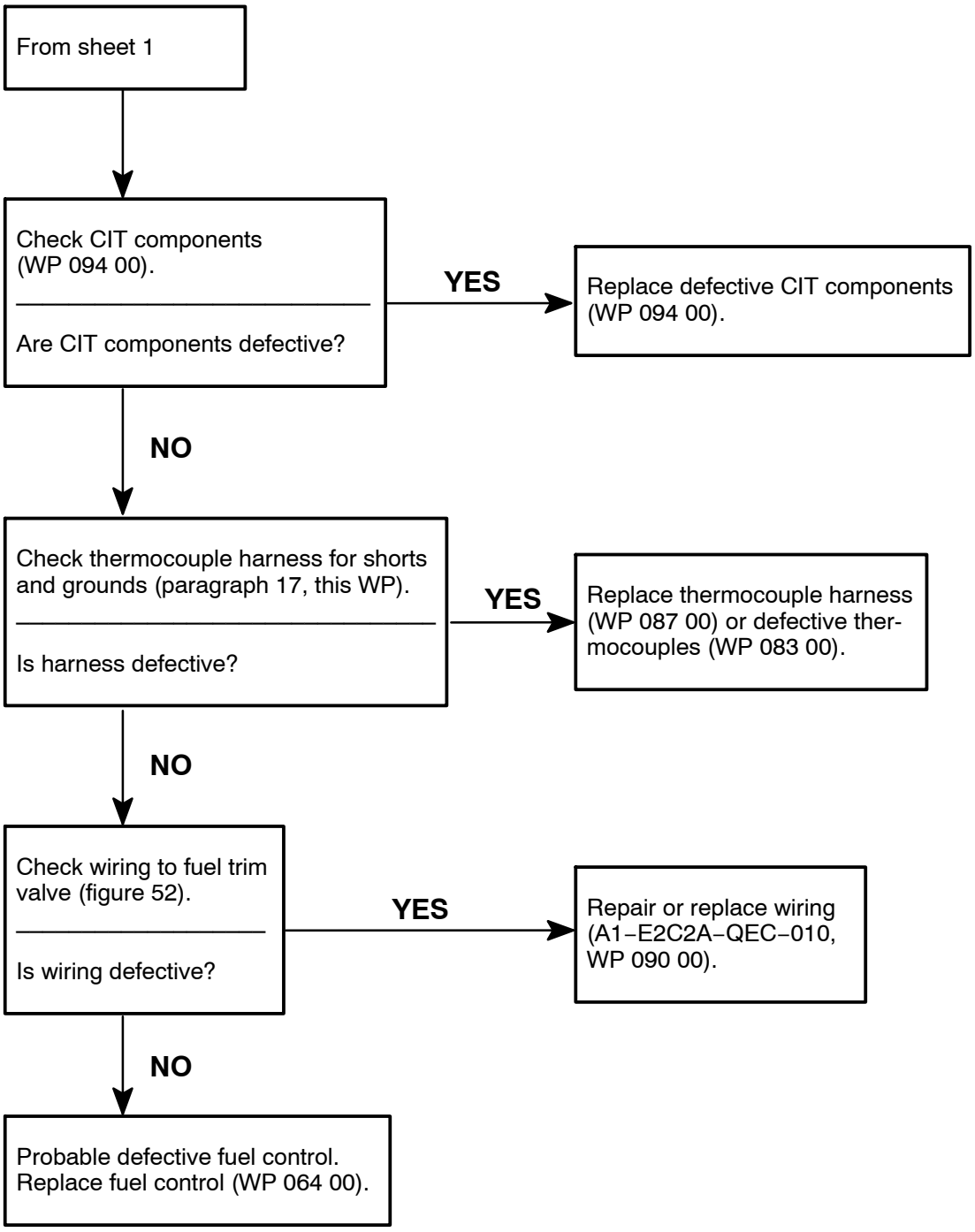

Figure 20. Excessive TMT With DETC Switch in CONTROL or LIMIT Positions (Sheet 2)

ENGINE TEMPERATURE TROUBLE

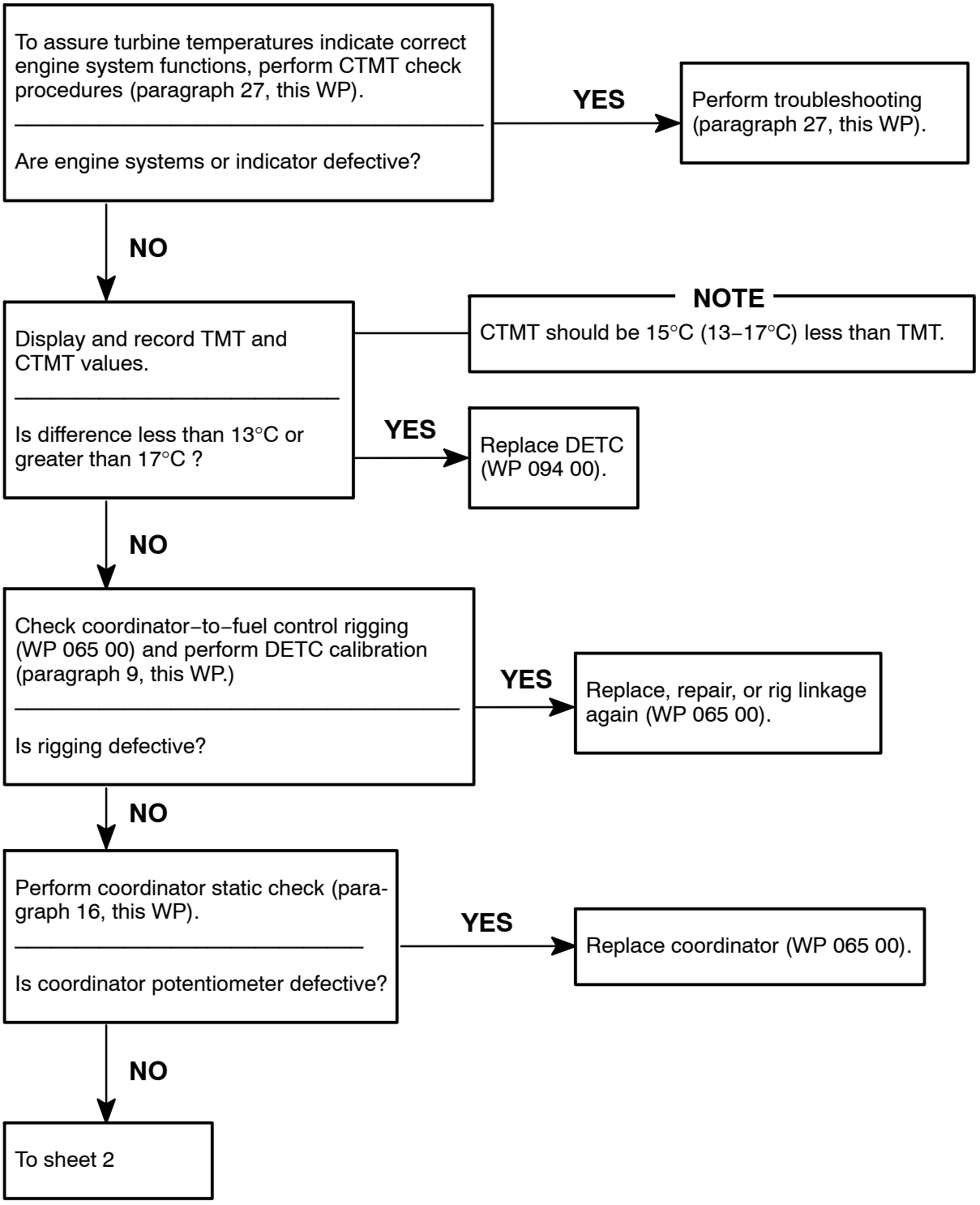

Figure 21. Abnormally Low TMT (Sheet 1 of 2)

ENGINE TEMPERATURE TROUBLE

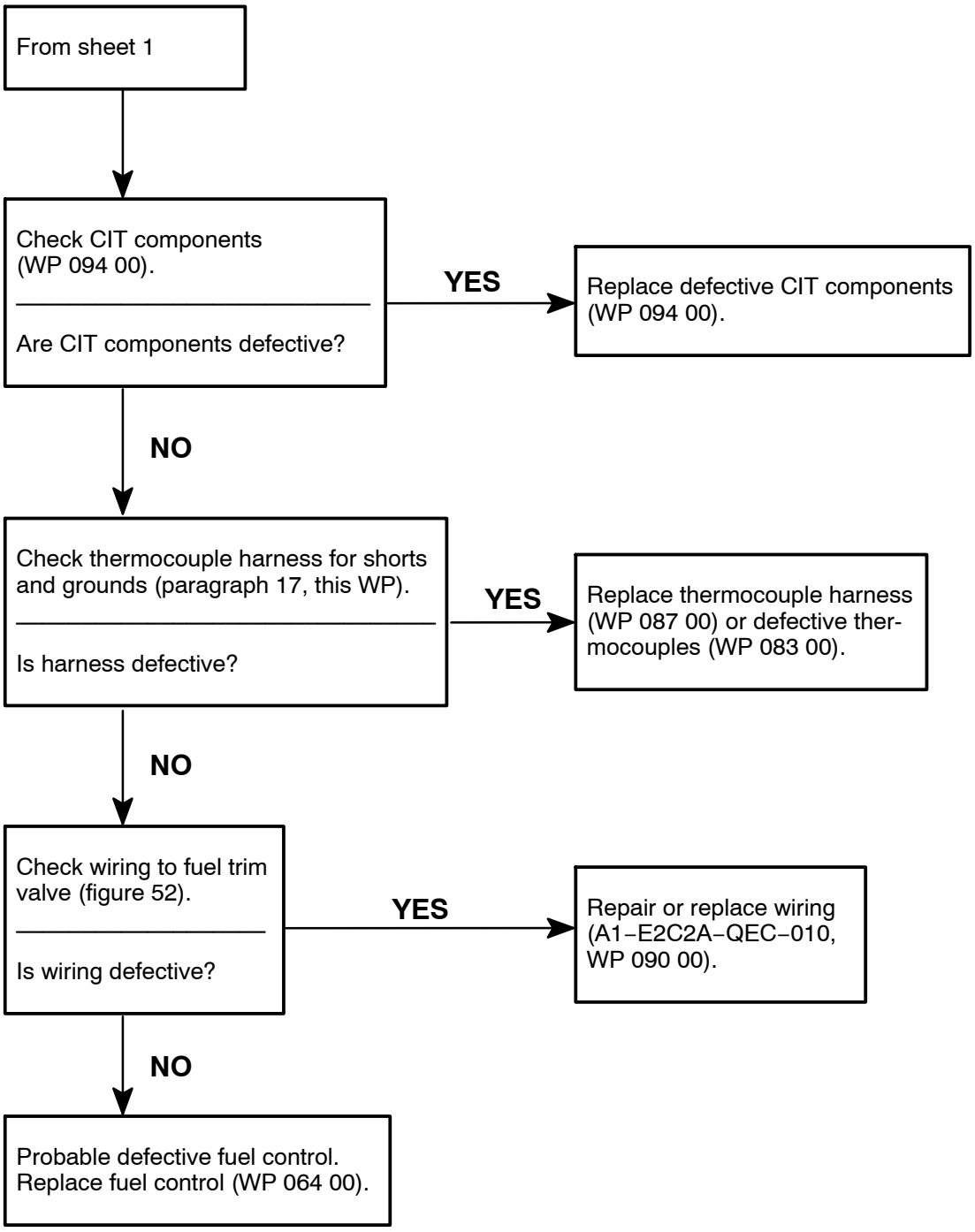

Figure 21. Abnormally Low TMT (Sheet 2)

ENGINE HORSEPOWER OR FUEL TROUBLE

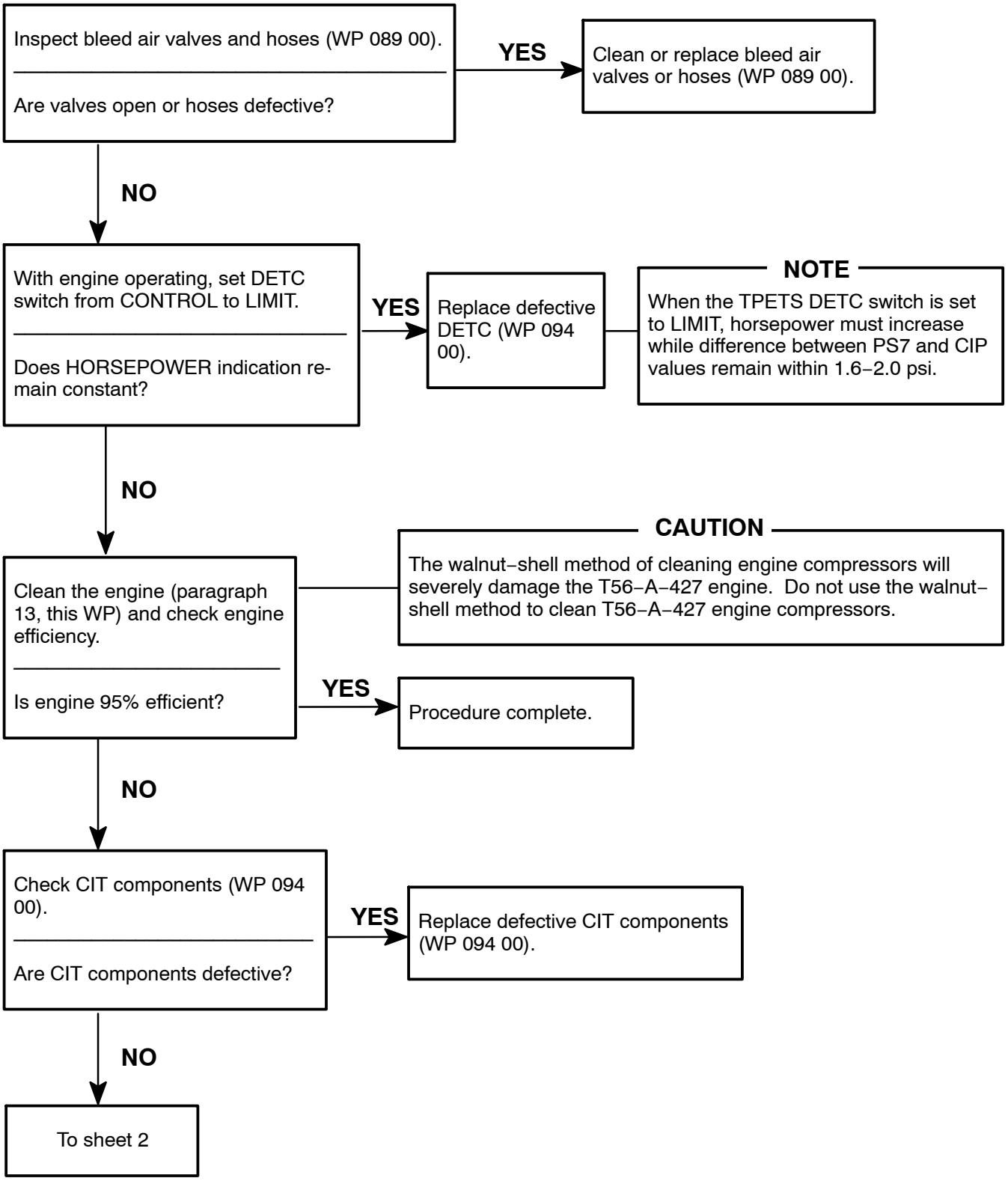

Figure 22. Low Horsepower and Low Fuel Flow at Normal TMT (Sheet 1 of 3)

ENGINE HORSEPOWER OR FUEL TROUBLE

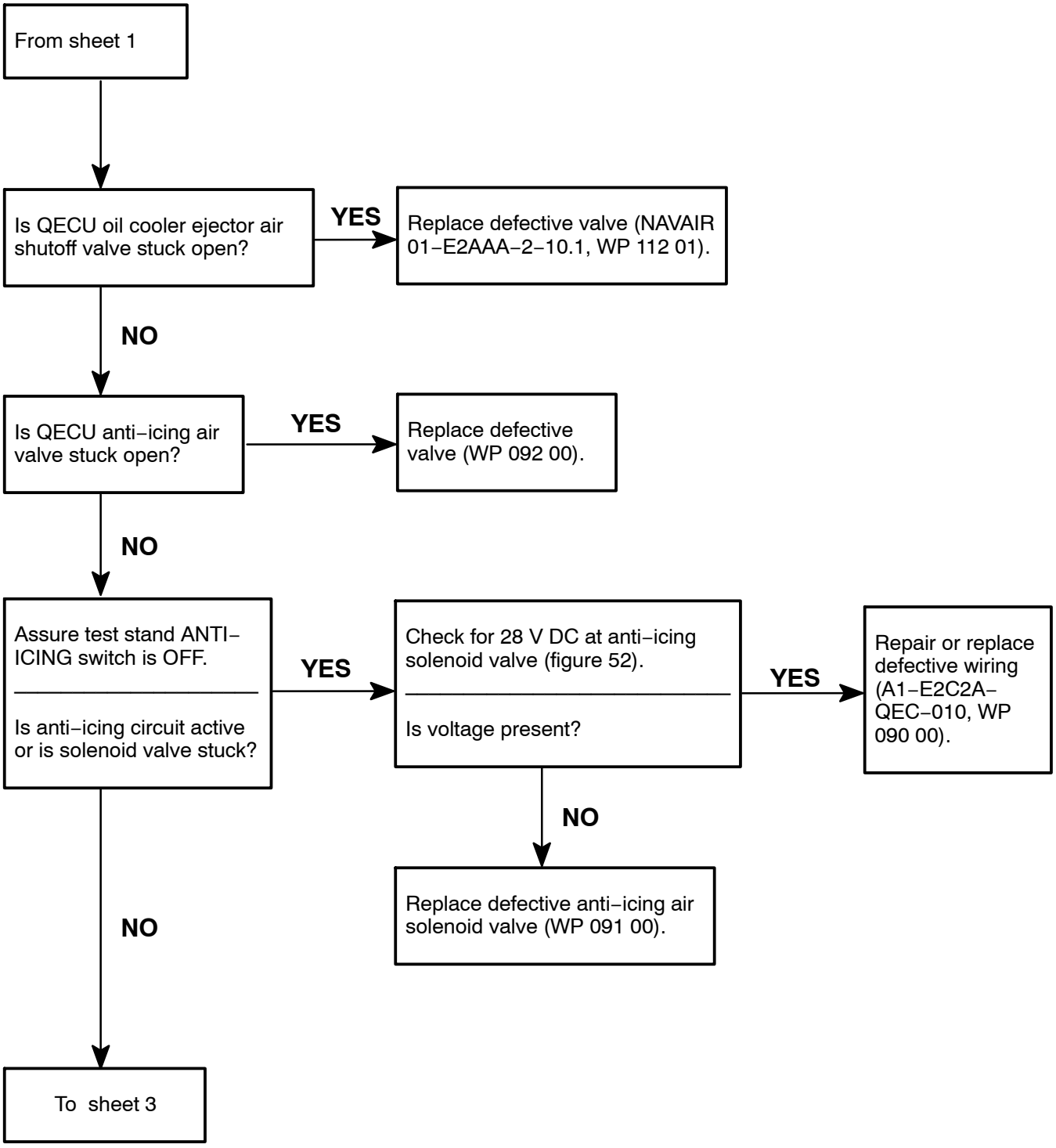

Figure 22. Low Horsepower and Low Fuel Flow at Normal TMT (Sheet 2)

ENGINE HORSEPOWER OR FUEL TROUBLE

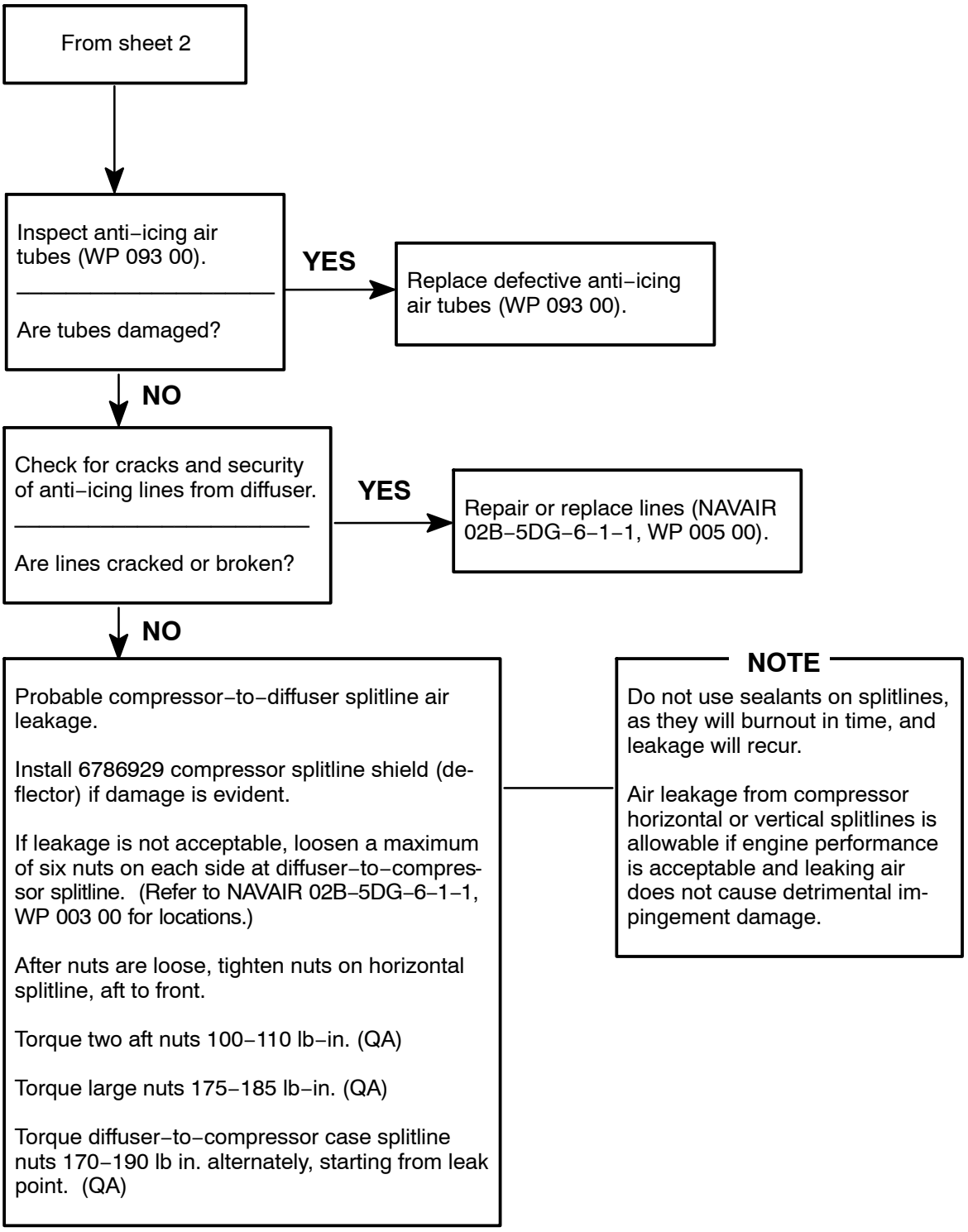

Figure 22. Low Horsepower and Low Fuel Flow at Normal TMT (Sheet 3)

ENGINE HORSEPOWER OR FUEL TROUBLE

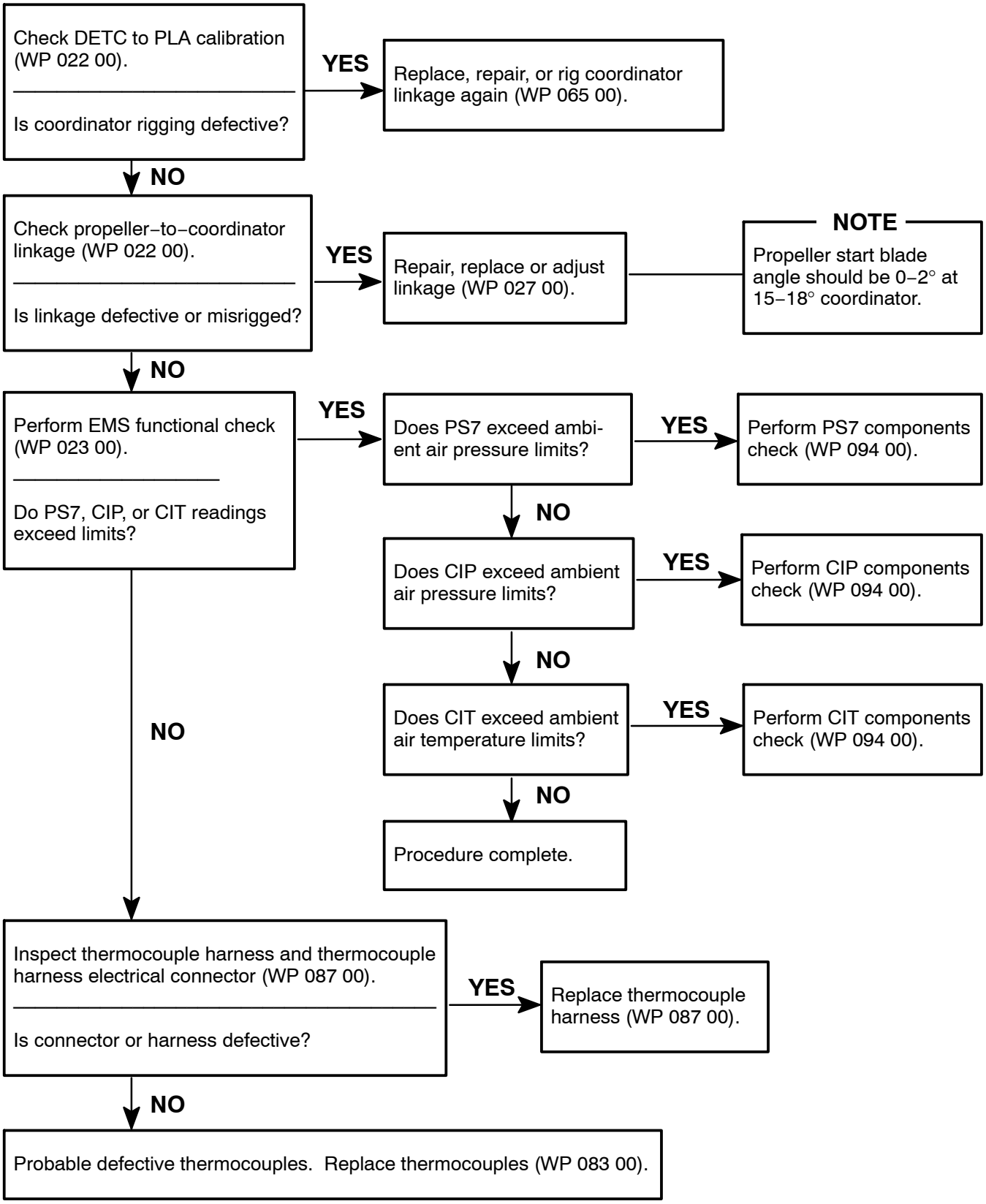

Figure 23. Low Horsepower With DETC Switch in CONTROL Position

ENGINE HORSEPOWER OR FUEL TROUBLE

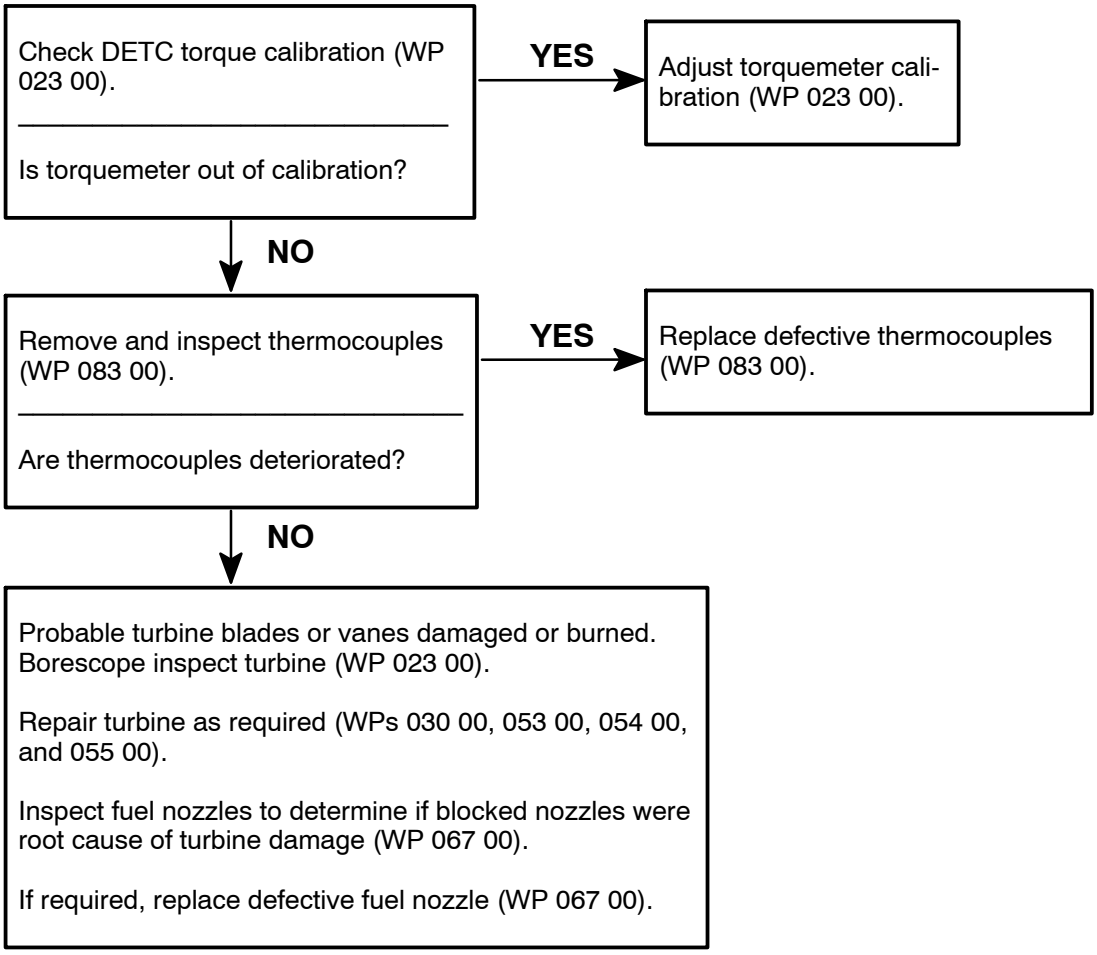

Figure 24. Low Horsepower and High Fuel Flow at Normal TMT

ENGINE HORSEPOWER OR FUEL TROUBLE

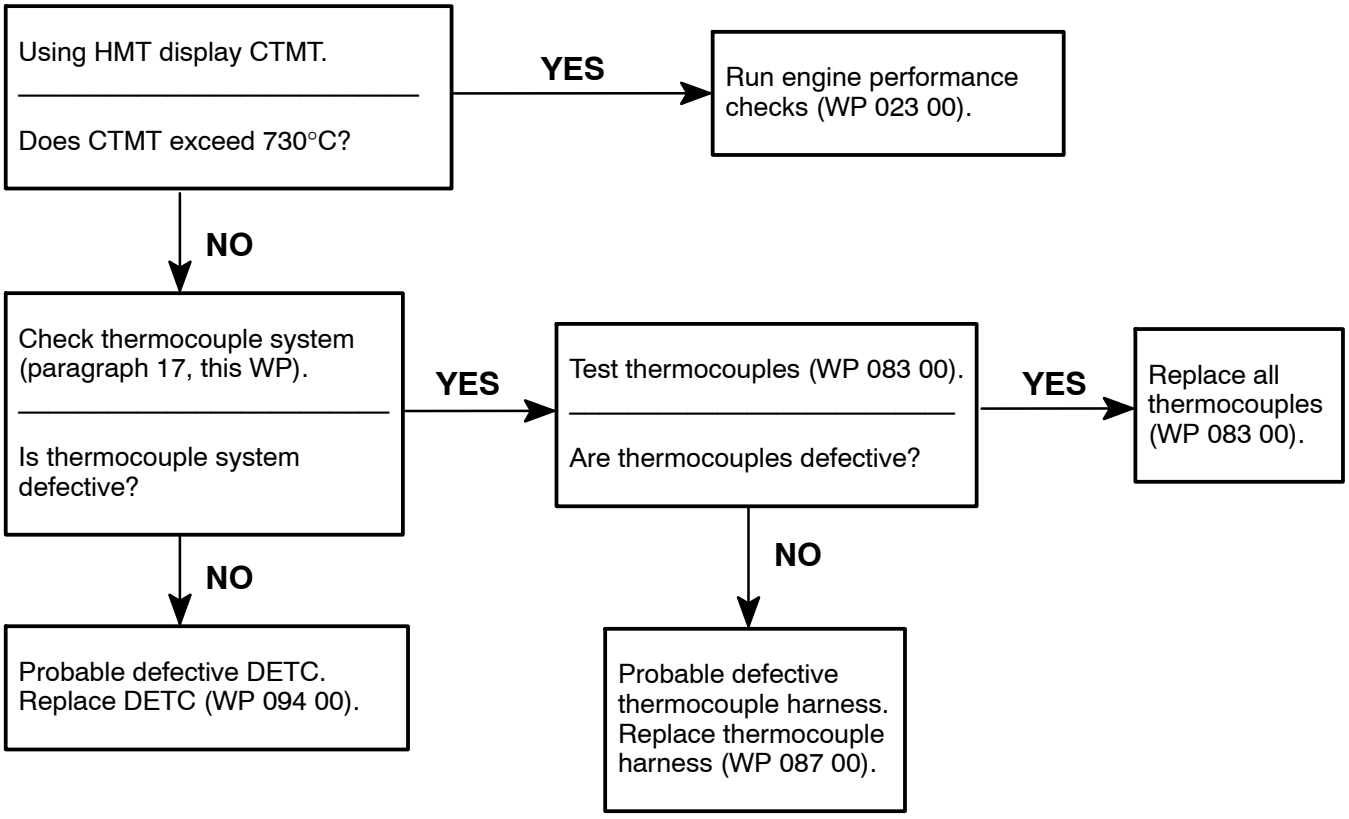

Figure 25. High Horsepower and High Fuel Flow at Normal TMT

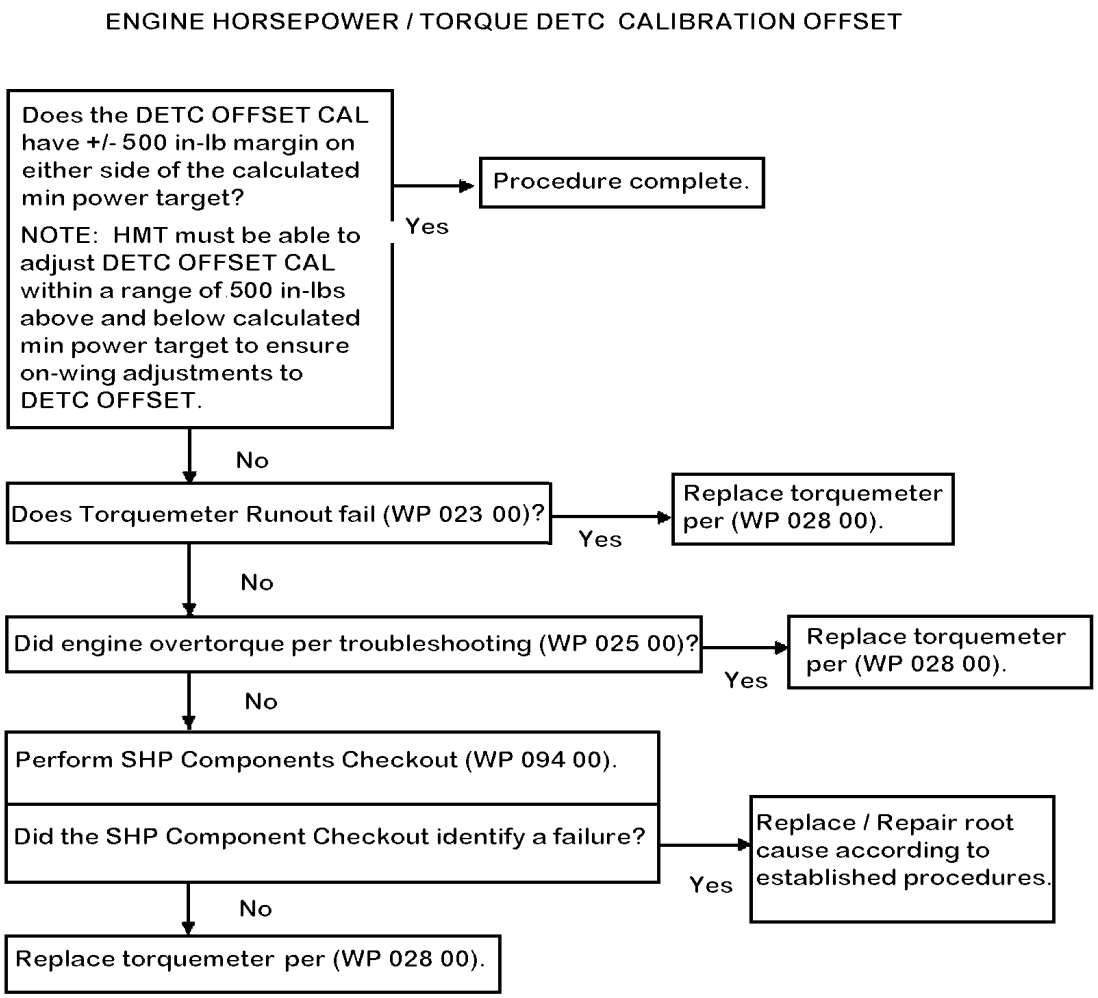

Figure 25A. DETC OFFSET CAL is Not Able to Calibrate

ENGINE HORSEPOWER OR FUEL TROUBLE

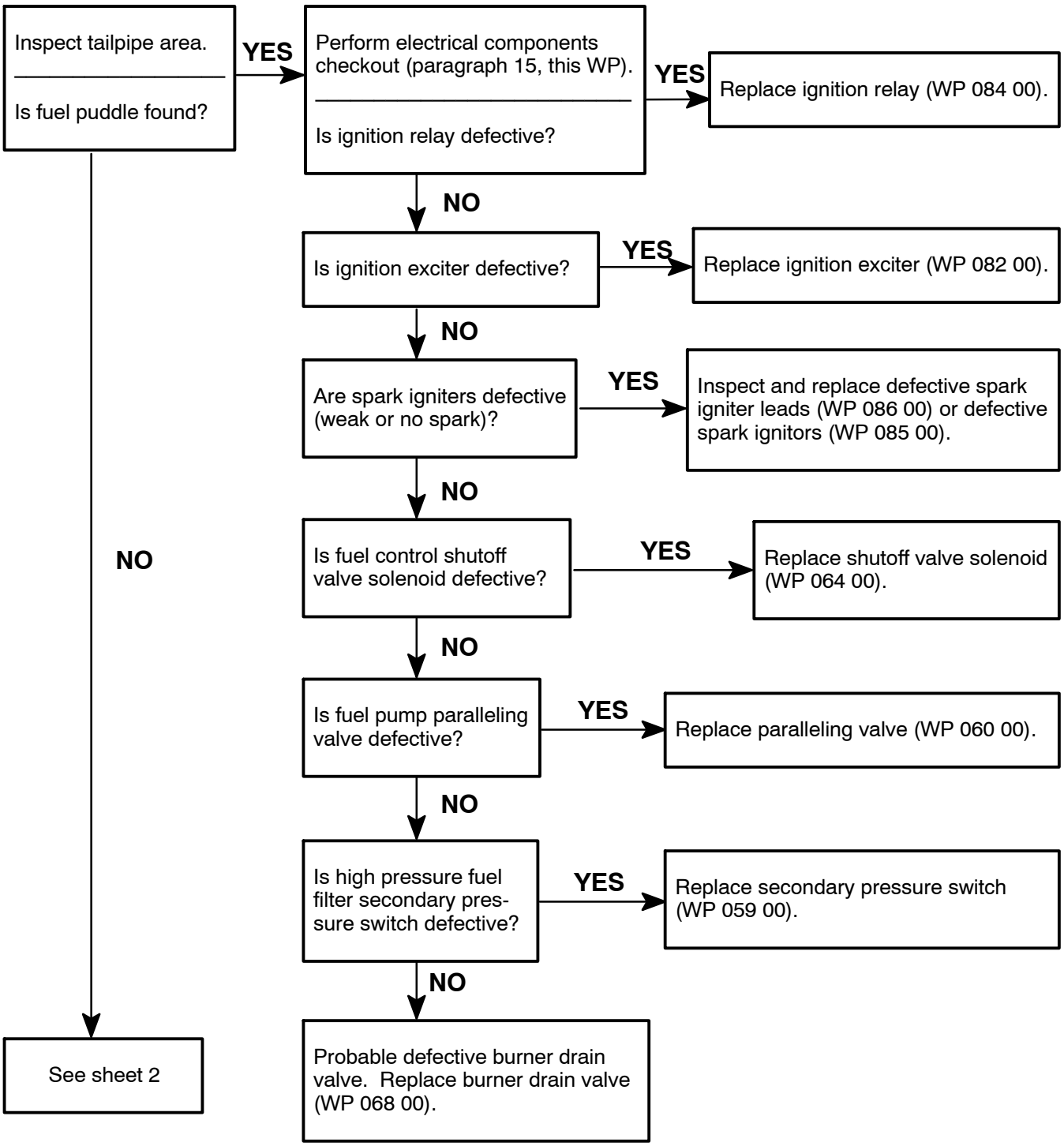

Figure 26. Tailpipe Torching (Sheet 1 of 2)

ENGINE HORSEPOWER OR FUEL TROUBLE

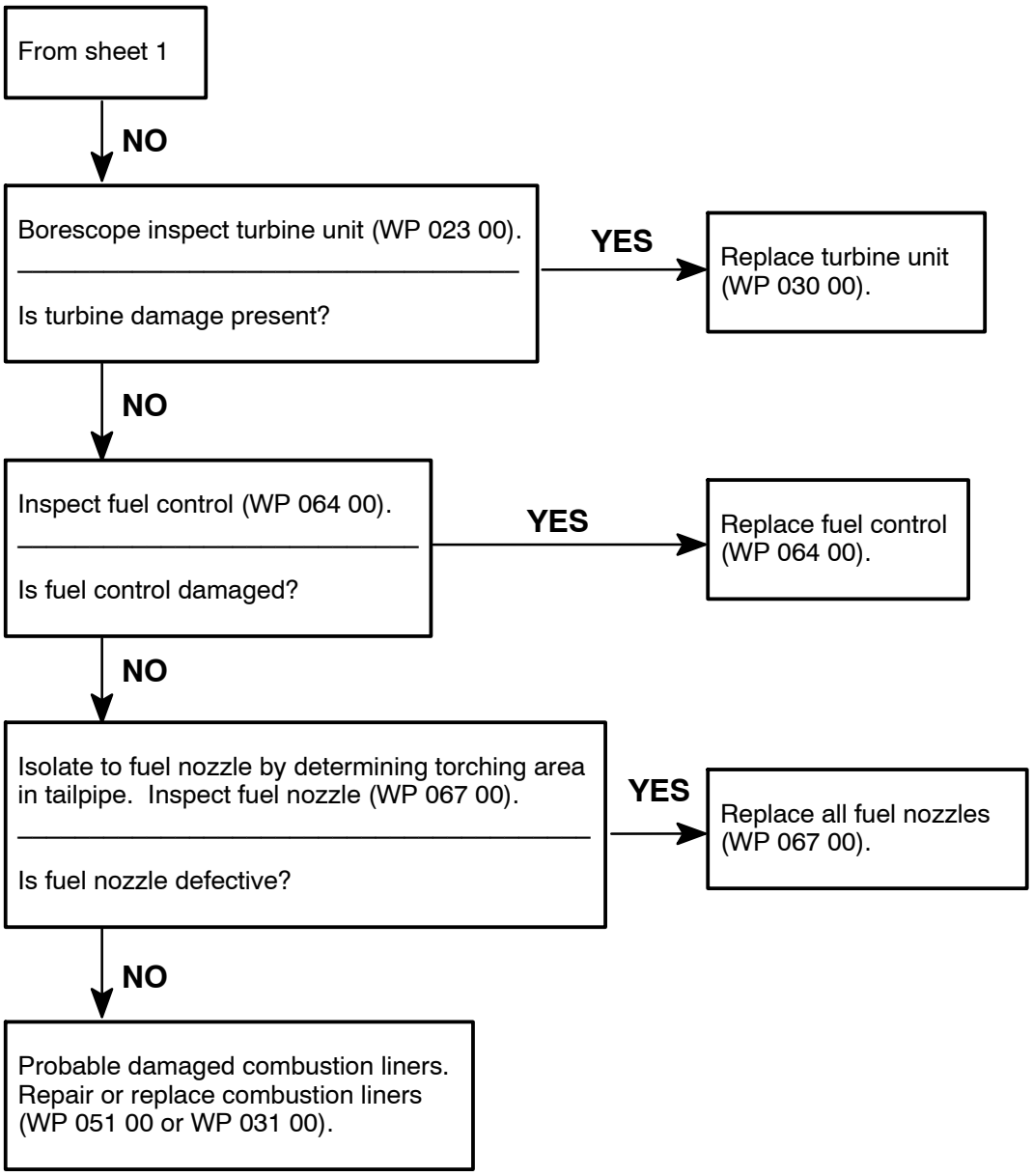

Figure 26. Tailpipe Torching (Sheet 2)

ENGINE OPERATION TROUBLE

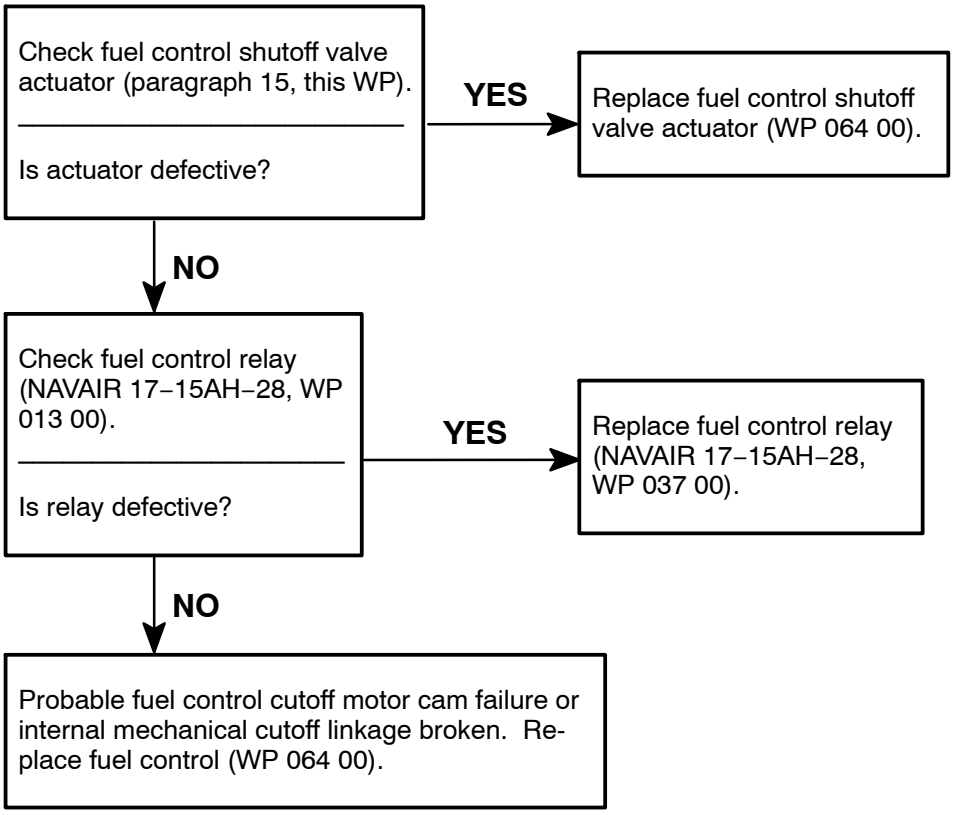

Figure 27. Engine Will Not Shut Down Electrically

ENGINE VIBRATION TROUBLE

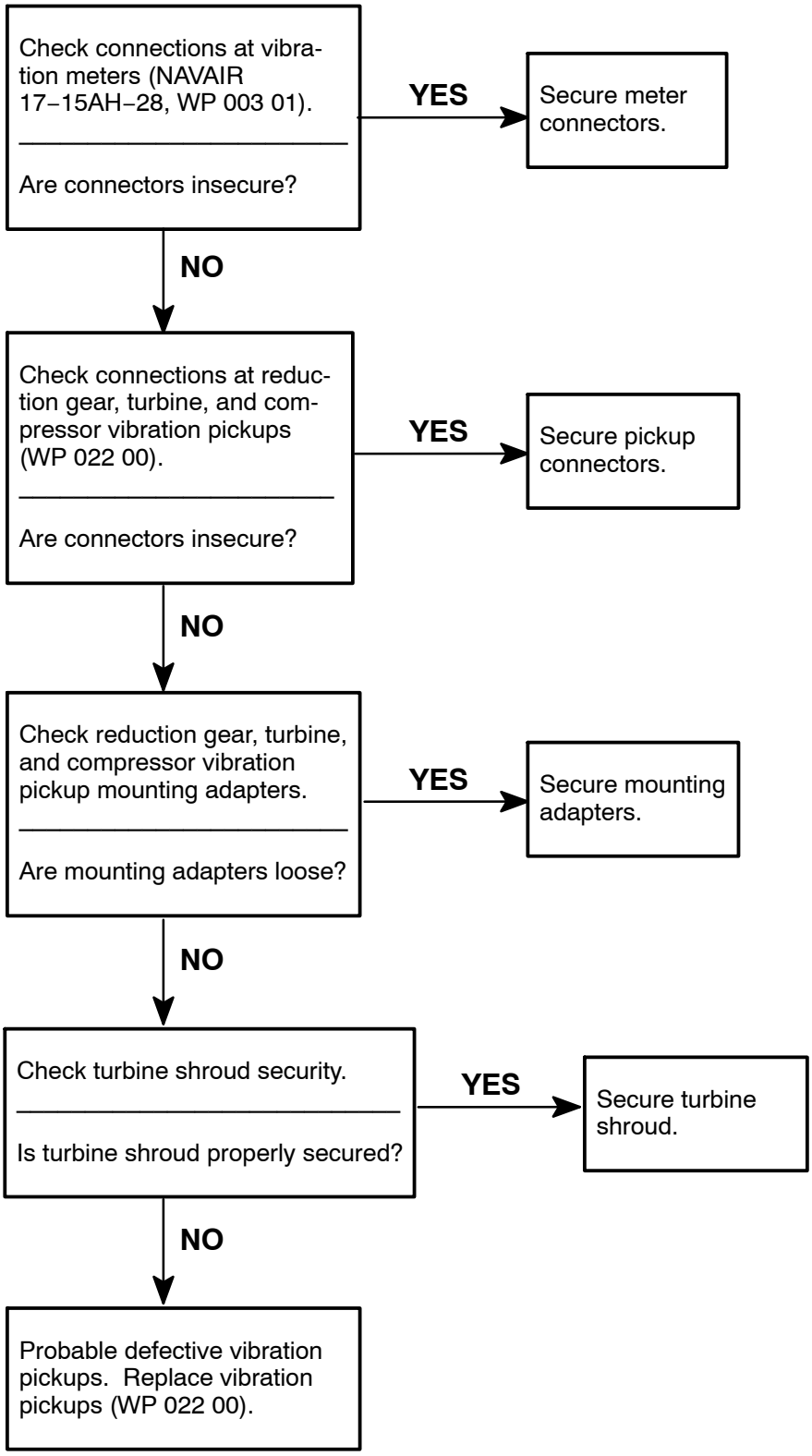

Figure 28. Vibration Indicator Readings Fluctuate

ENGINE VIBRATION TROUBLE

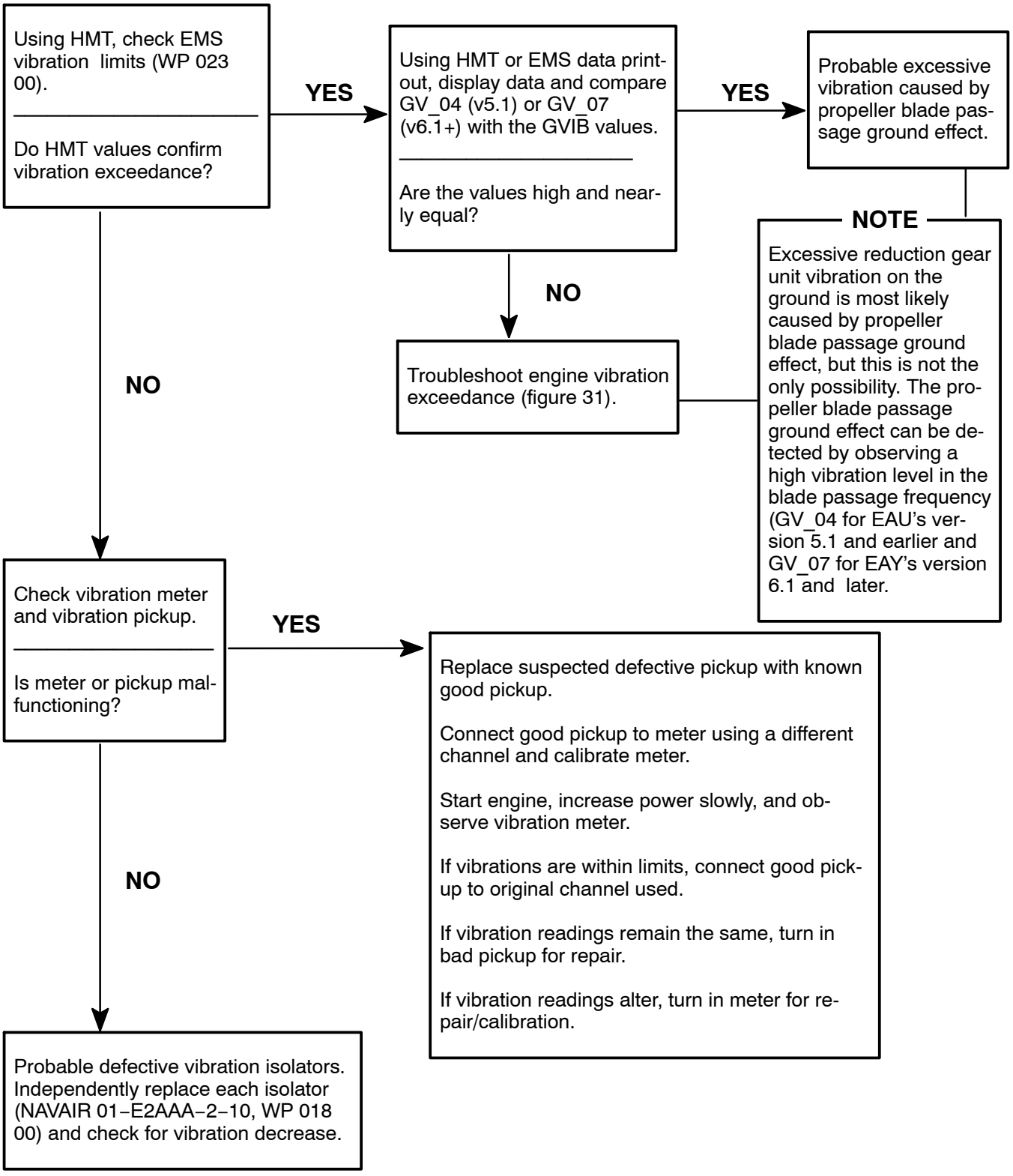

Figure 29. Vibration Indications High

ENGINE VIBRATION TROUBLE

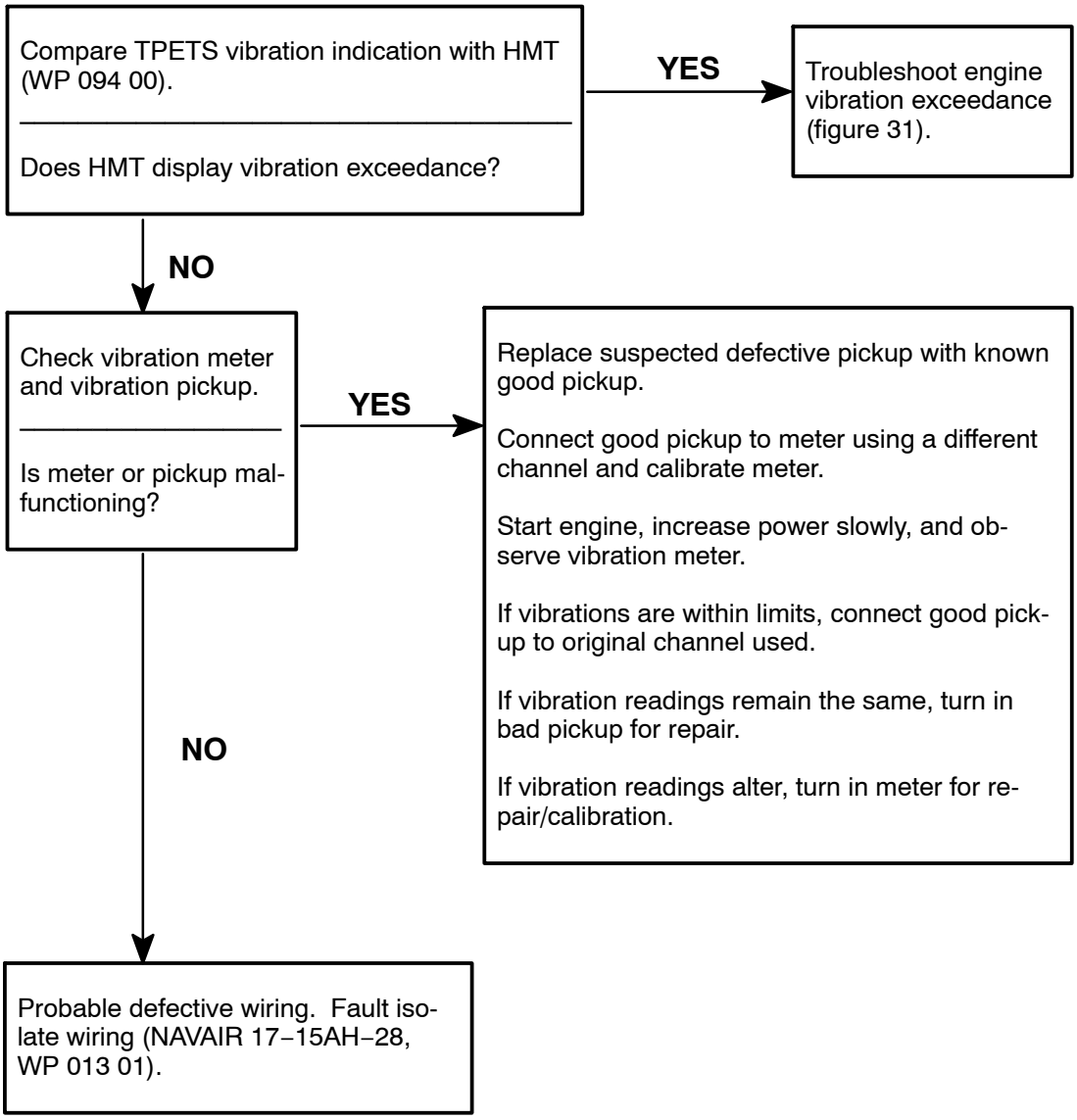

Figure 30. No Vibration Indication or Vibration Indication Too Low

ENGINE VIBRATION TROUBLE

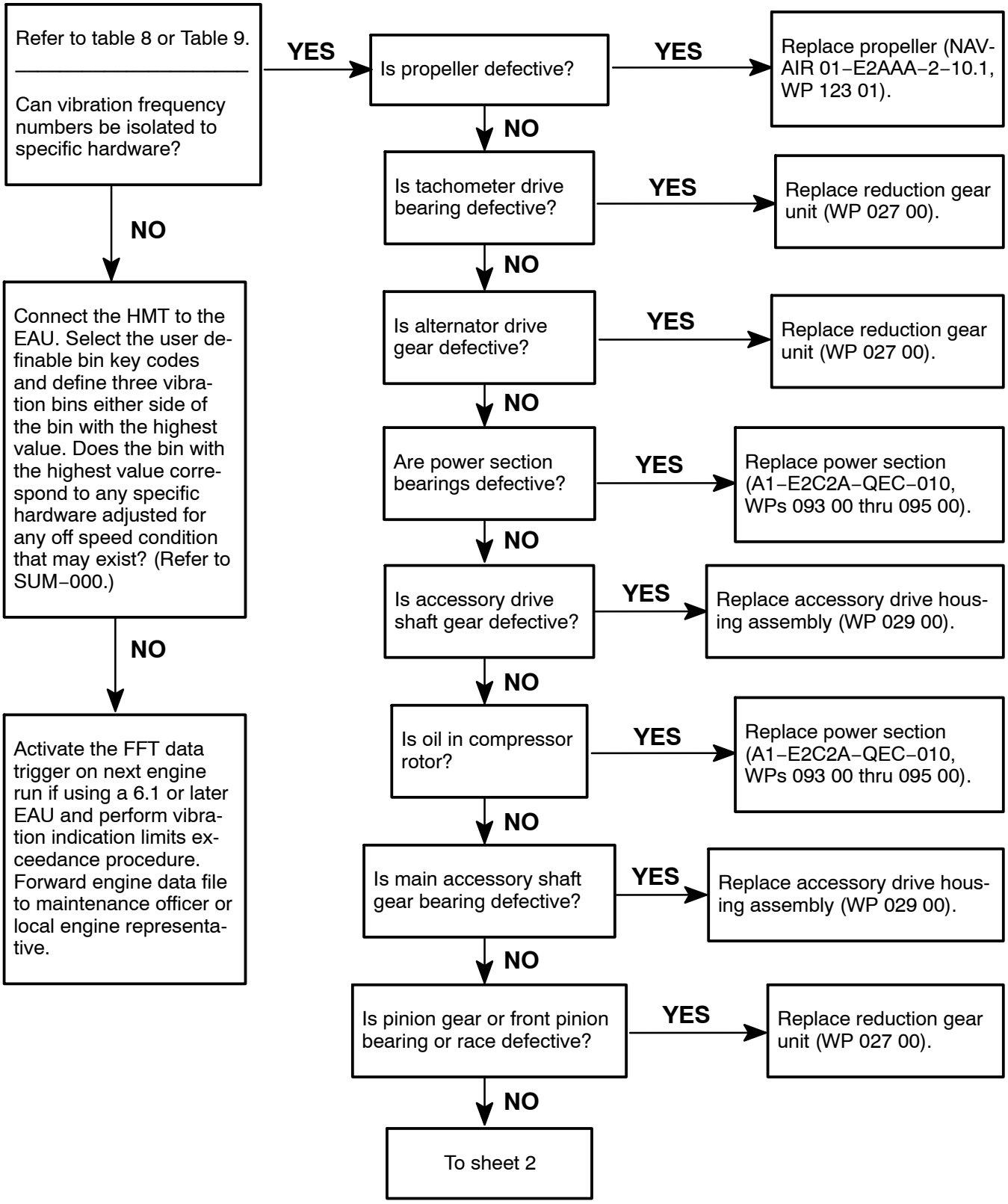

Figure 31. Vibration Indication Limits Exceeded (Sheet 1 of 2)

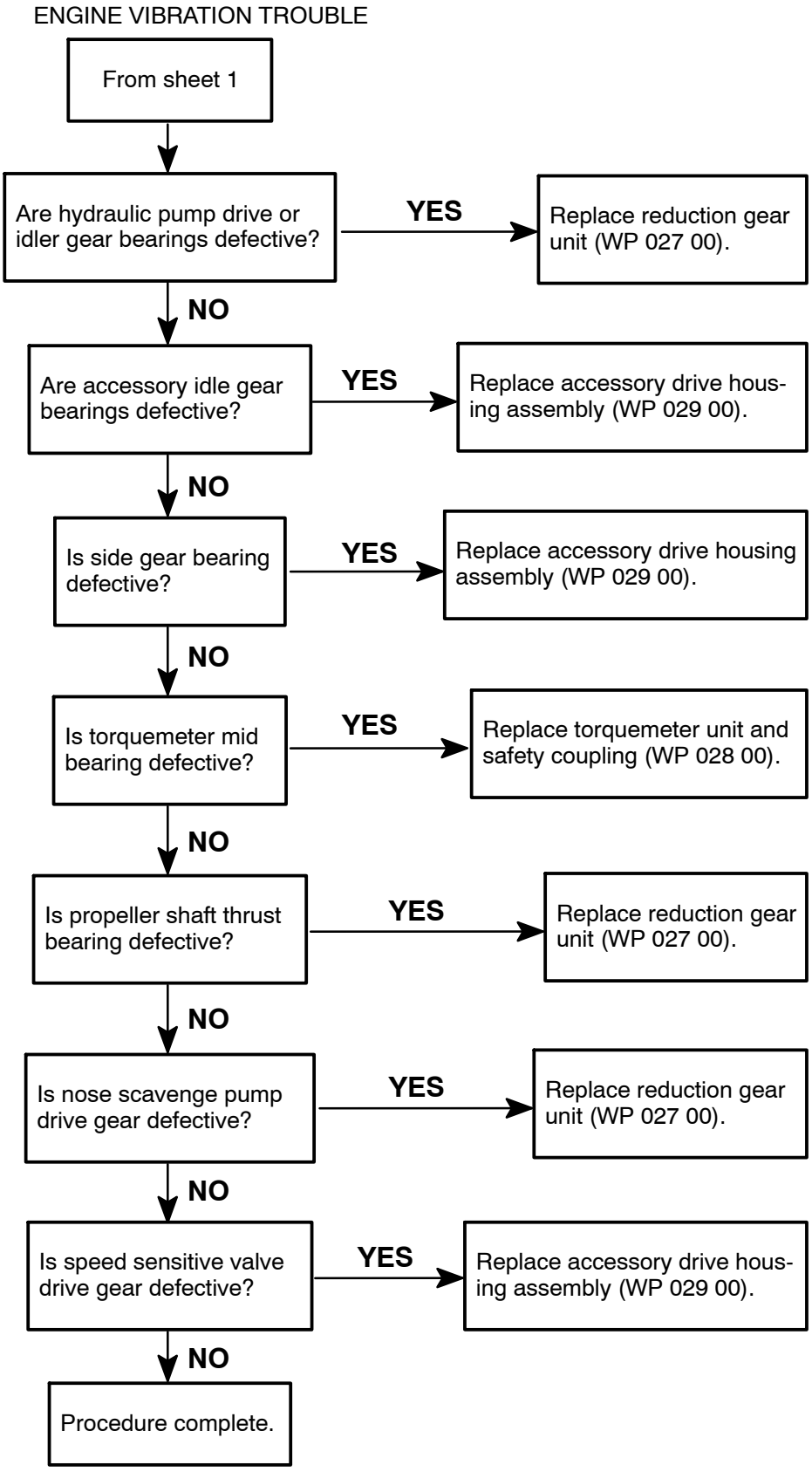

Figure 31. Vibration Indication Limits Exceeded (Sheet 2)

ENGINE OPERATION TROUBLE

NOTE

Do not use sealants on splitlines, as they will burn out in time, and leakage will recur.

Air leakage from compressor horizontal or vertical splitlines is allowable if engine performance is acceptable and leaking air does not cause detrimental impingement damage.

Inspect diffuser–to–compressor case and diffuser–to–combustion outer case splitlines.

Do splitlines have slight gaps?

YES

Install 6786929 compressor splitline shield (deflector) if damage is evident.

If leakage is not acceptable, loosen a maximum of six nuts on each side of diffuser–to–compressor splitline and eight nuts on compressor horizontal splitline. (Refer to NAVAIR 02B–5DG–6–1–1, WP 003 00 for locations.)

After nuts are loose, tighten nuts on horizontal splitline, aft to front (WP 049 00).

Torque two aft nuts 100–110 lb in. (QA)

Torque large nuts 175–185 lb in. (QA)

Torque diffuser–to–compressor case splitline nuts 170–190 lb in. alternately, starting from leak point. (QA)

NO

Probable damaged compressor case edge at junction of horizontal and vertical flanges.

Remove compressor case that exhibits leakage (WP 047 00).

Inspect for necessary sharp corners at case junction with diffuser (WP 048 00).

Remove any burrs or metal displacement damage by careful stoning. Do not break sharp corners.

Reinstall case (WP 047 00).

Torque horizontal splitline nuts (rear to front) first, and then torque vertical splitline nuts. (QA)

Re–test for leaks. If leakage still occurs, replace power section (A1–E2C2A–QEC–010, WPs 093 00 thru 095 00).

Figure 32. Air Leakage at Compressor Casing Splitline

ENGINE HORSEPOWER OR FUEL TROUBLE
AND
ENGINE OIL TROUBLE

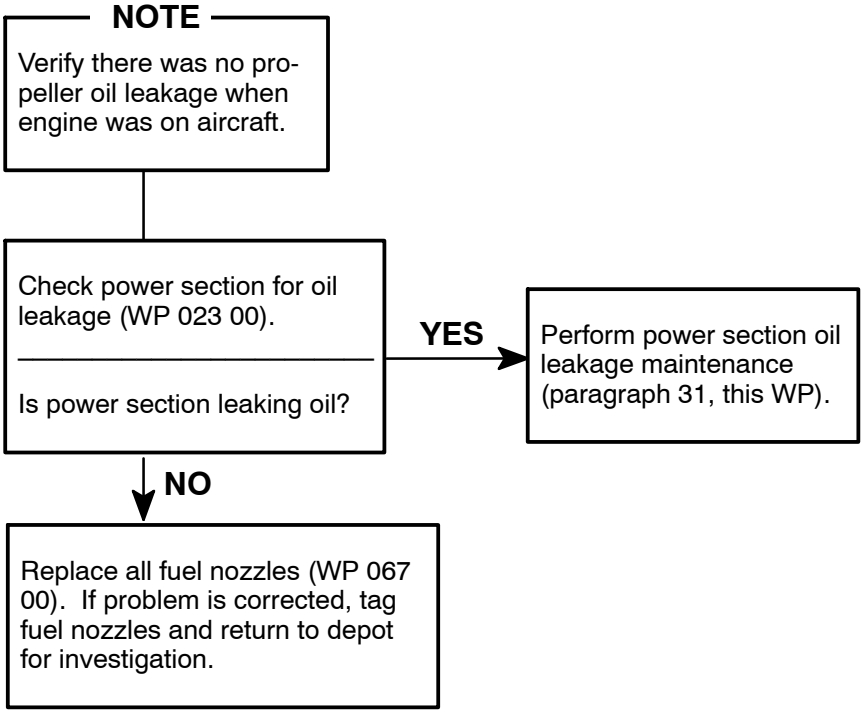

Figure 33. Engine Removed for Fumes in Cockpit

ENGINE START OR ACCELERATION TROUBLE

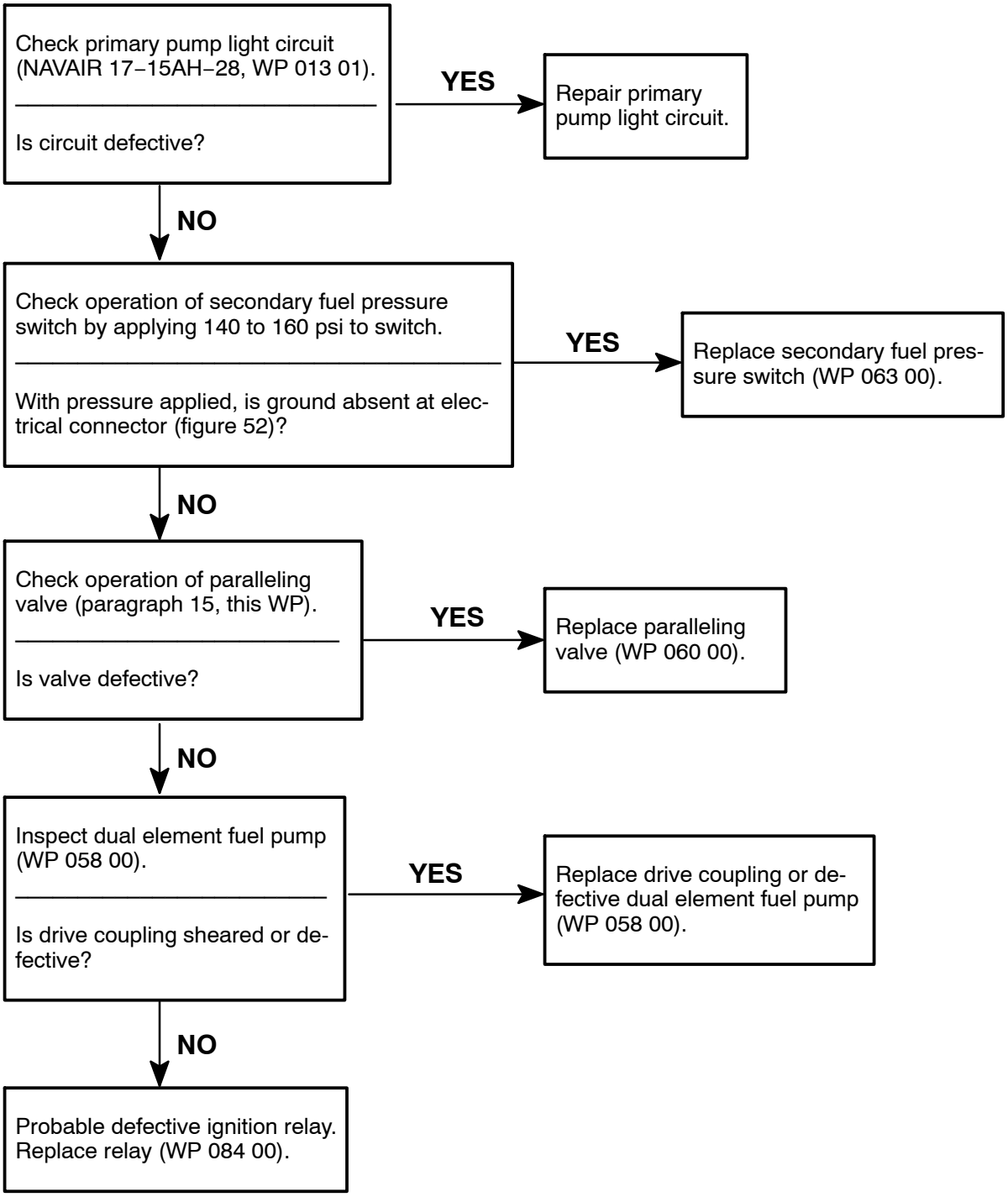

Figure 34. Primary Pump Light Does Not Go On Between 15 and 63% (2200–9000 RPM) During Start

ENGINE START OR ACCELERATION TROUBLE

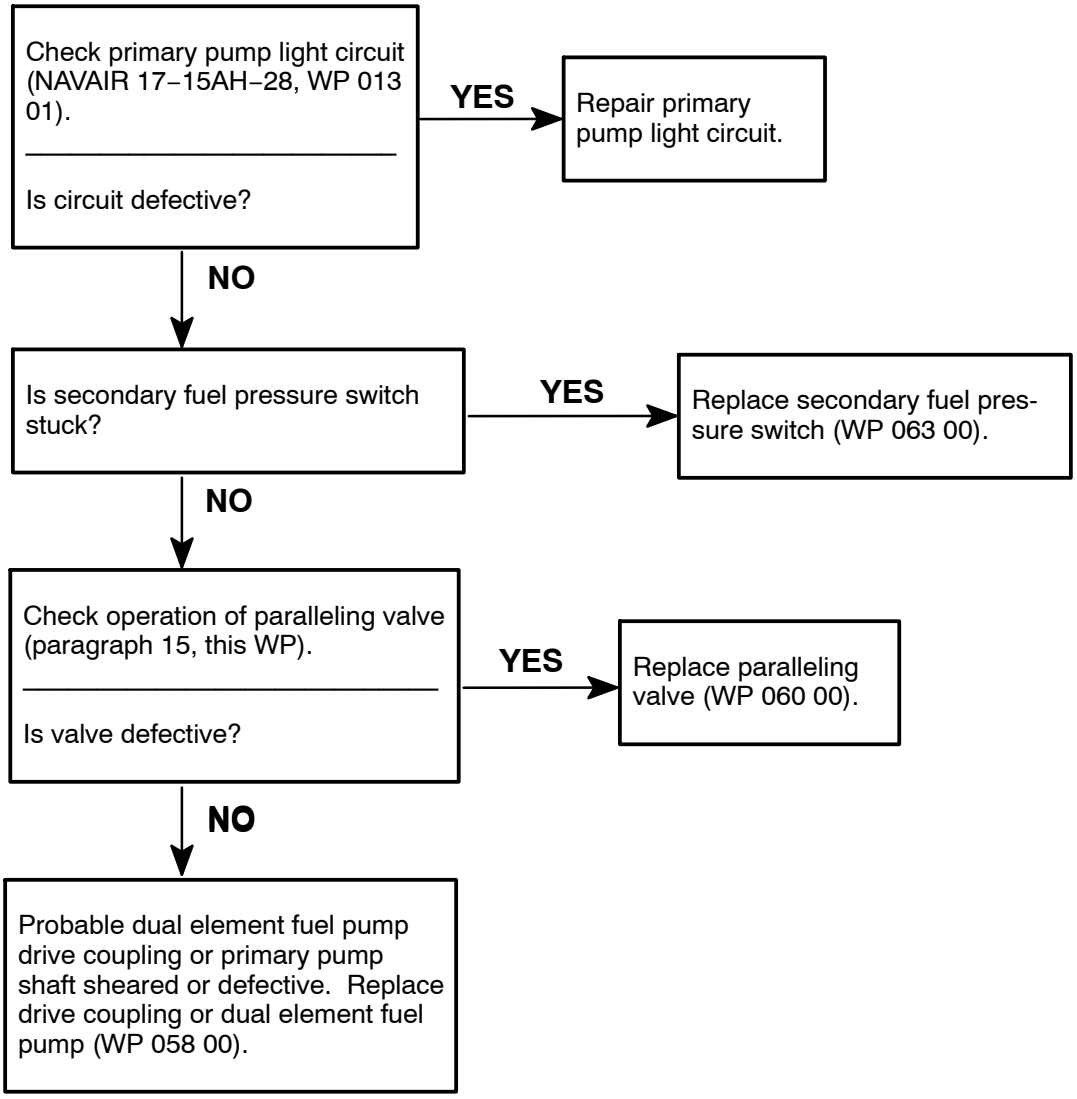

Figure 35. Primary Pump Light Does Not Go Out Above 63% (9000 RPM) During Start

ENGINE OPERATION TROUBLE

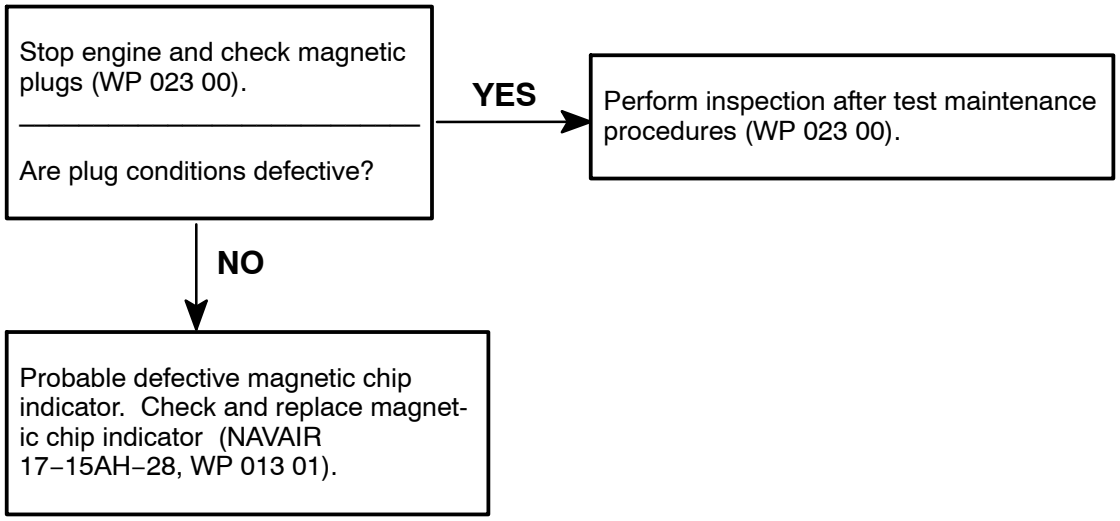

Figure 36. Magnetic Plug Chip Detector Light Comes On

ENGINE OIL TROUBLE

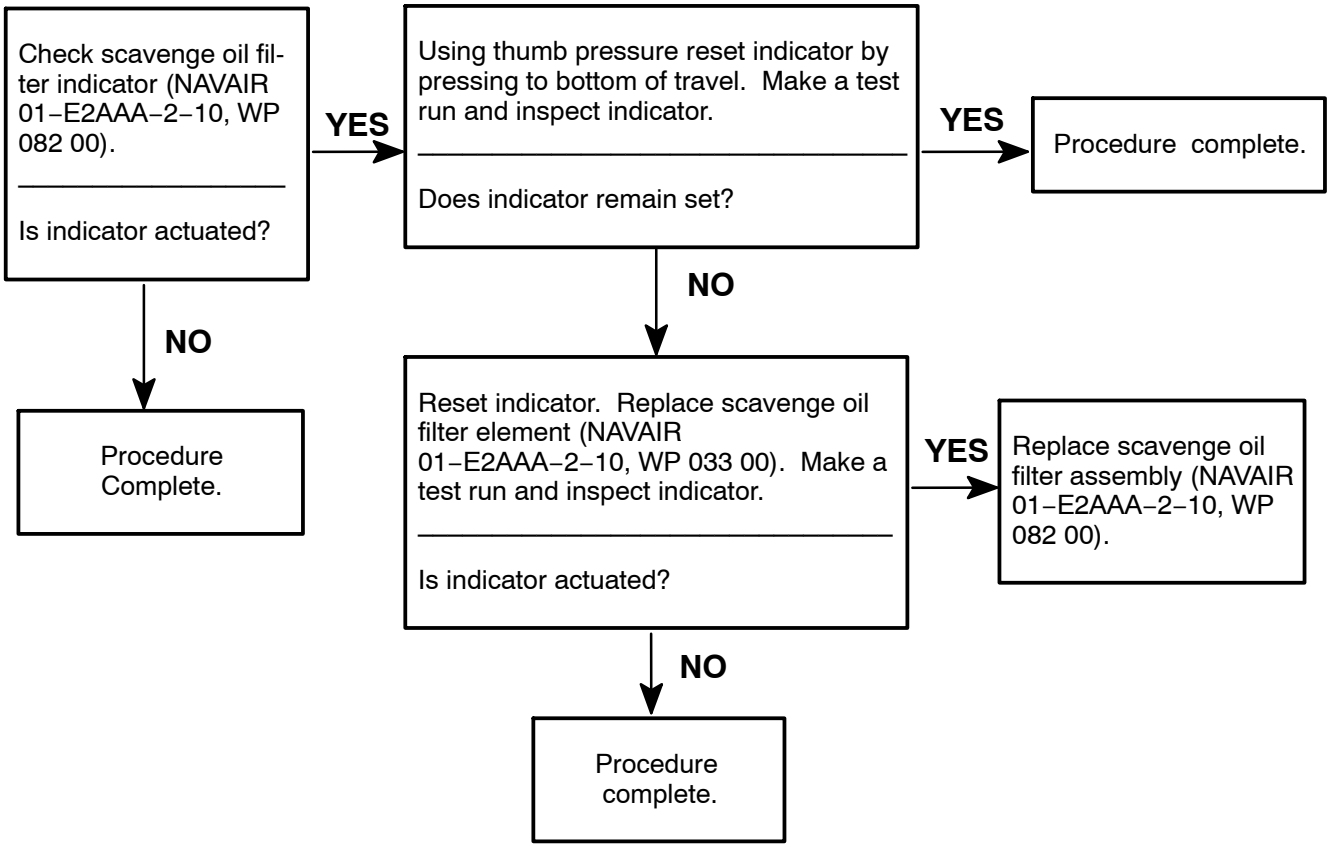

Figure 37. Differential Pressure Indicator Actuated on Scavenge Oil Filter

ENGINE OPERATION TROUBLE

Check propeller nut torque (NAVAIR 01–E2AAA–2–10.1, WP 123 02).

Is torque value incorrect?

YES

Below minimum but above 1500 lb–ft:

a. Torque propeller retaining nut to correct value.
b. Perform engine test.

Between 1000 and 1500 lb ft (inspection):

a. Remove propeller.
b. Inspect shaft and propeller for witness marks (grooving of perceptible depth, raised metal, or other damage).
c. Inspect propeller shaft splines for unusual wear (wear on un–driven side of splines).

Between 1000 and 1500 lb–ft (damaged):

NOTE

Witness marks or unusual spline wear indicates propeller shaft has operated in over–stressed condition.

a. Paint propeller shaft red.
b. Enter torque value and type of damage found in reduction gear unit service record (logbook).
c. Complete VIDS/MAF on discrepancy in accordance with OPNAV Form 4790/60.
d. Replace reduction gear unit (WP 027 00) and BCM to depot.

Between 1000 and 1500 lb–ft (undamaged):

a. Install propeller.
b. Torque propeller retaining nut to correct value.
c. Perform engine test.

Below 1000 lb–ft:

NOTE

Damage may have occurred to the propeller shaft that cannot be deter mined at I–level.

a. Paint propeller shaft red.
b. Enter torque value in reduction gear unit service record (logbook).
c. Complete VIDS/MAF on discrepancy in accordance with OPNAV Form 4790/60.
d. Replace reduction gear unit (WP 027 00) and BCM to depot.

NO

To sheet 2

Figure 38. Engine/Propeller Operated in Wrong Configuration (Sheet 1 of 2)

ENGINE OPERATION TROUBLE

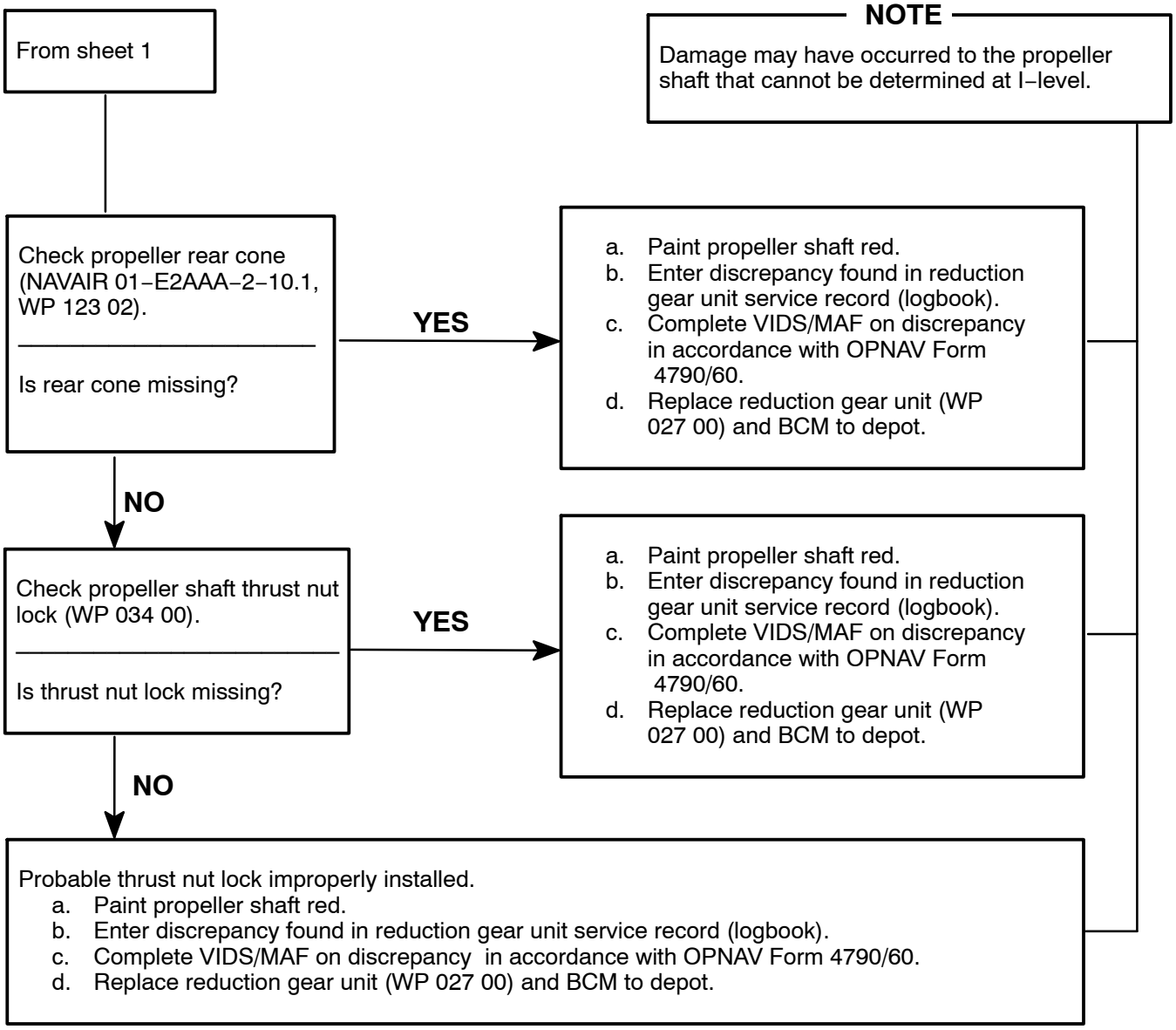

Figure 38. Engine/Propeller Operated in Wrong Configuration (Sheet 2)

ENGINE HORSEPOWER OR FUEL TROUBLE

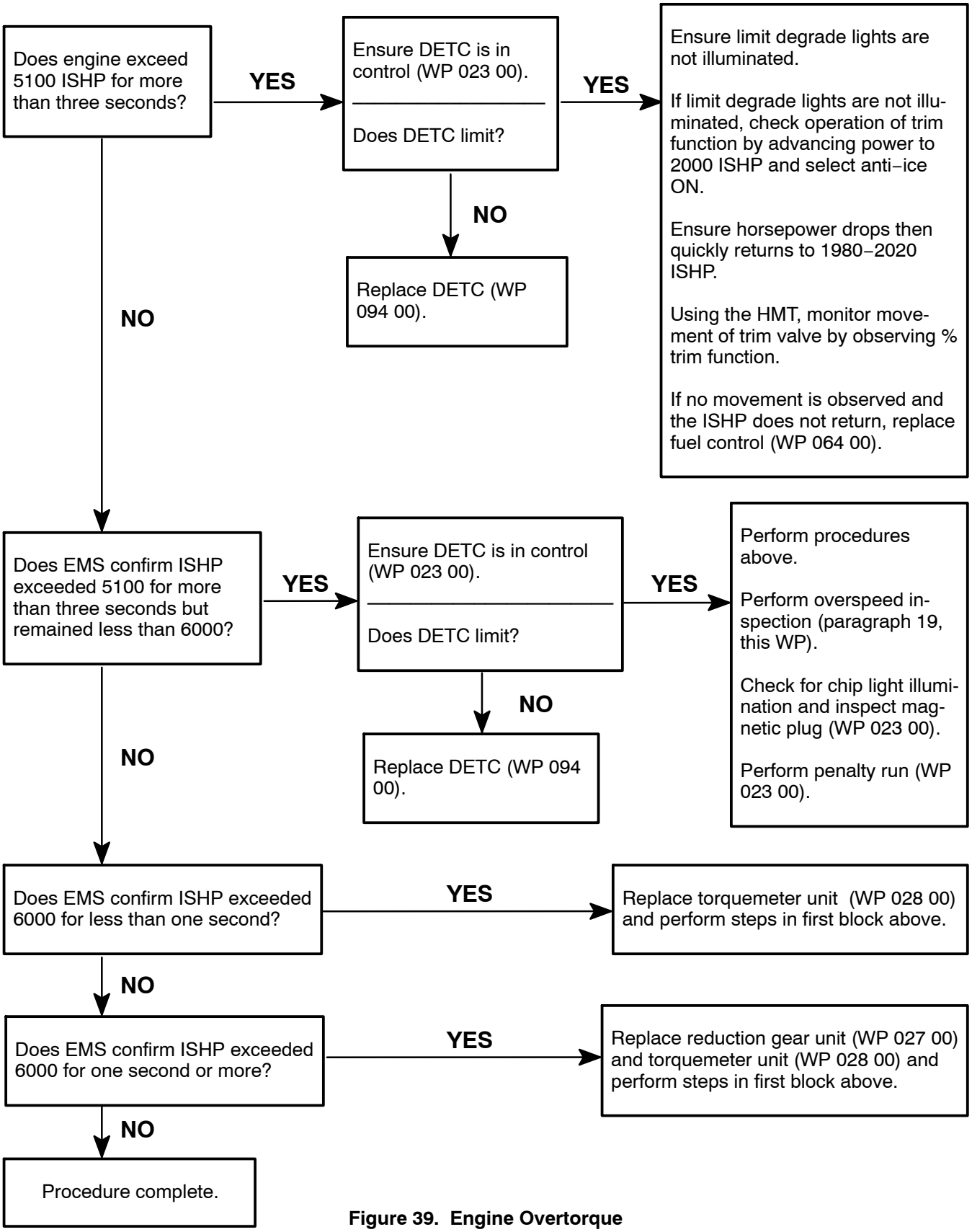

Figure 39. Engine Overtorque

ENGINE RPM TROUBLE

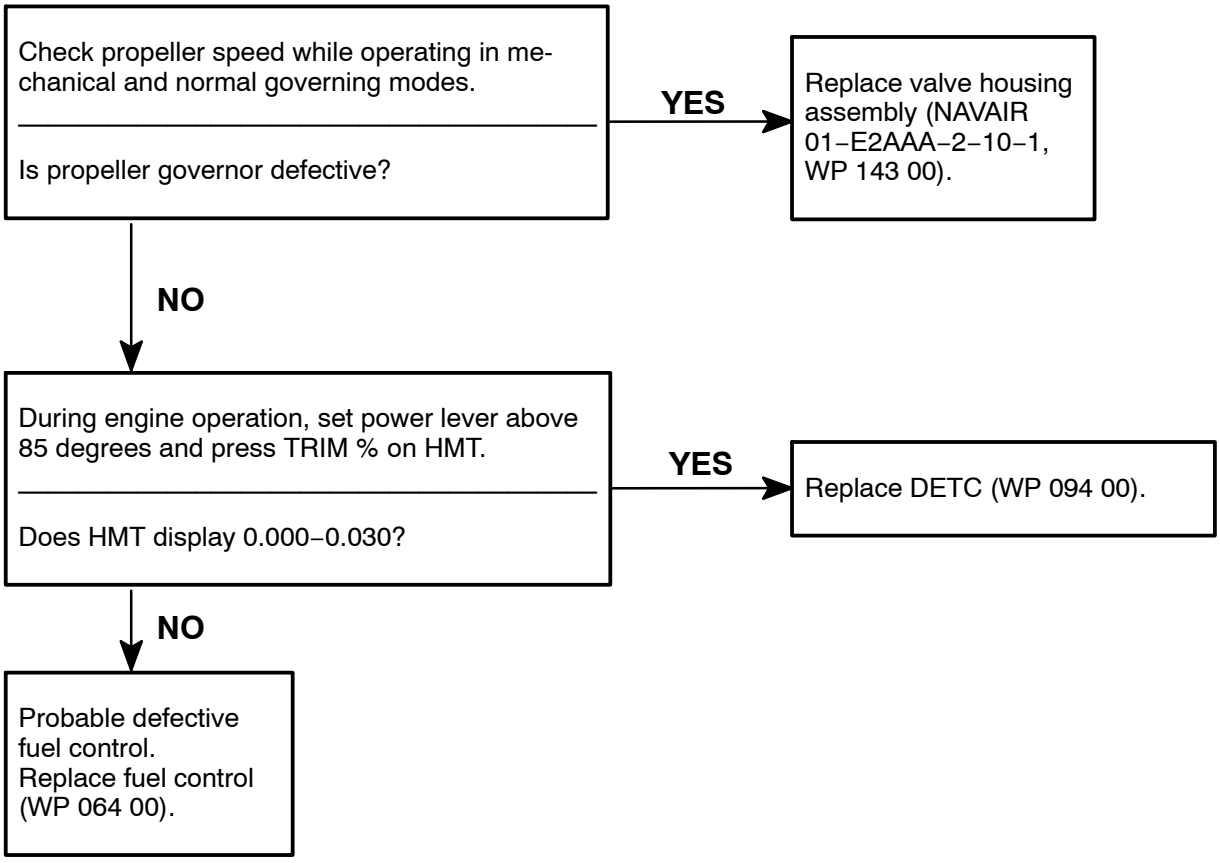

Figure 40. EMS Confirms RPM Over 103% or 108% (14,666 or 15,378 RPM)

ENGINE HORSEPOWER OR FUEL TROUBLE

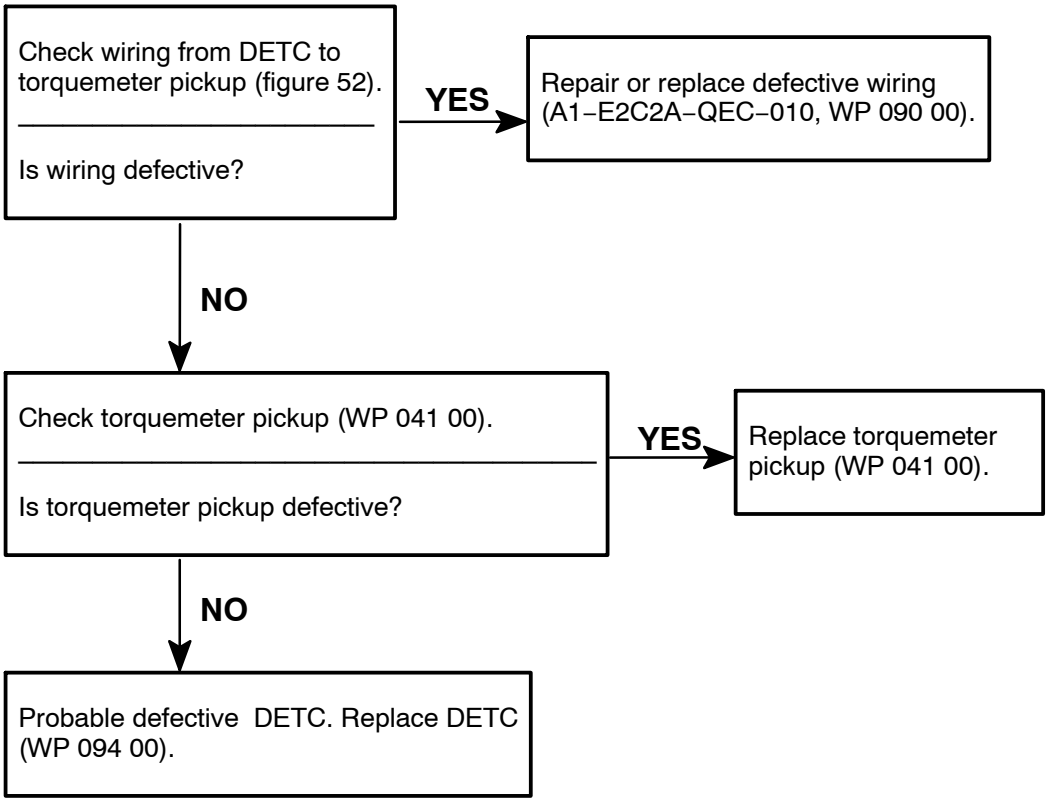

Figure 41. EMS Confirms ISHP Over 5125

ENGINE HORSEPOWER OR FUEL TROUBLE

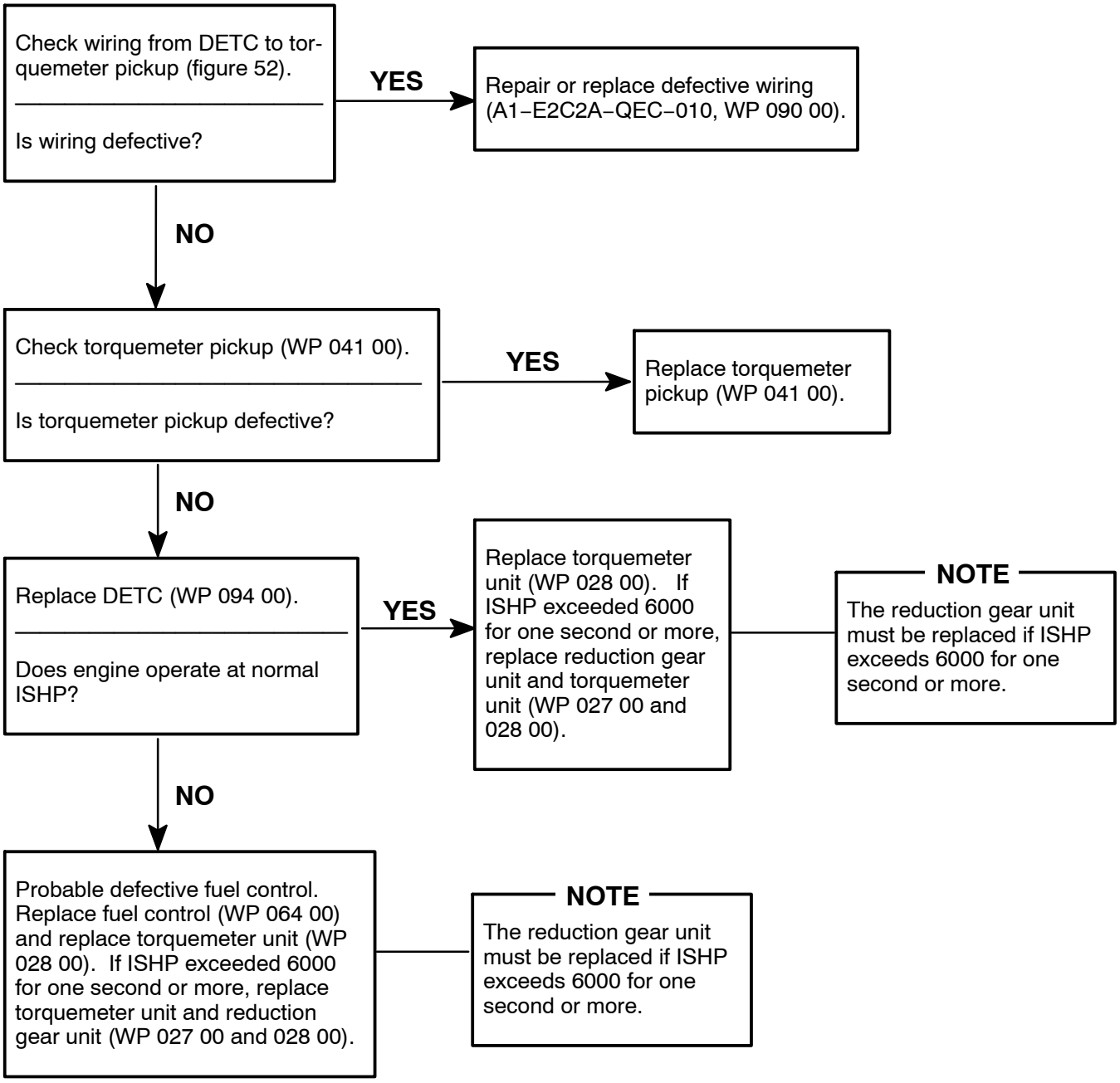

Figure 42. EMS Confirms ISHP Over 6000

ENGINE TEMPERATURE TROUBLE

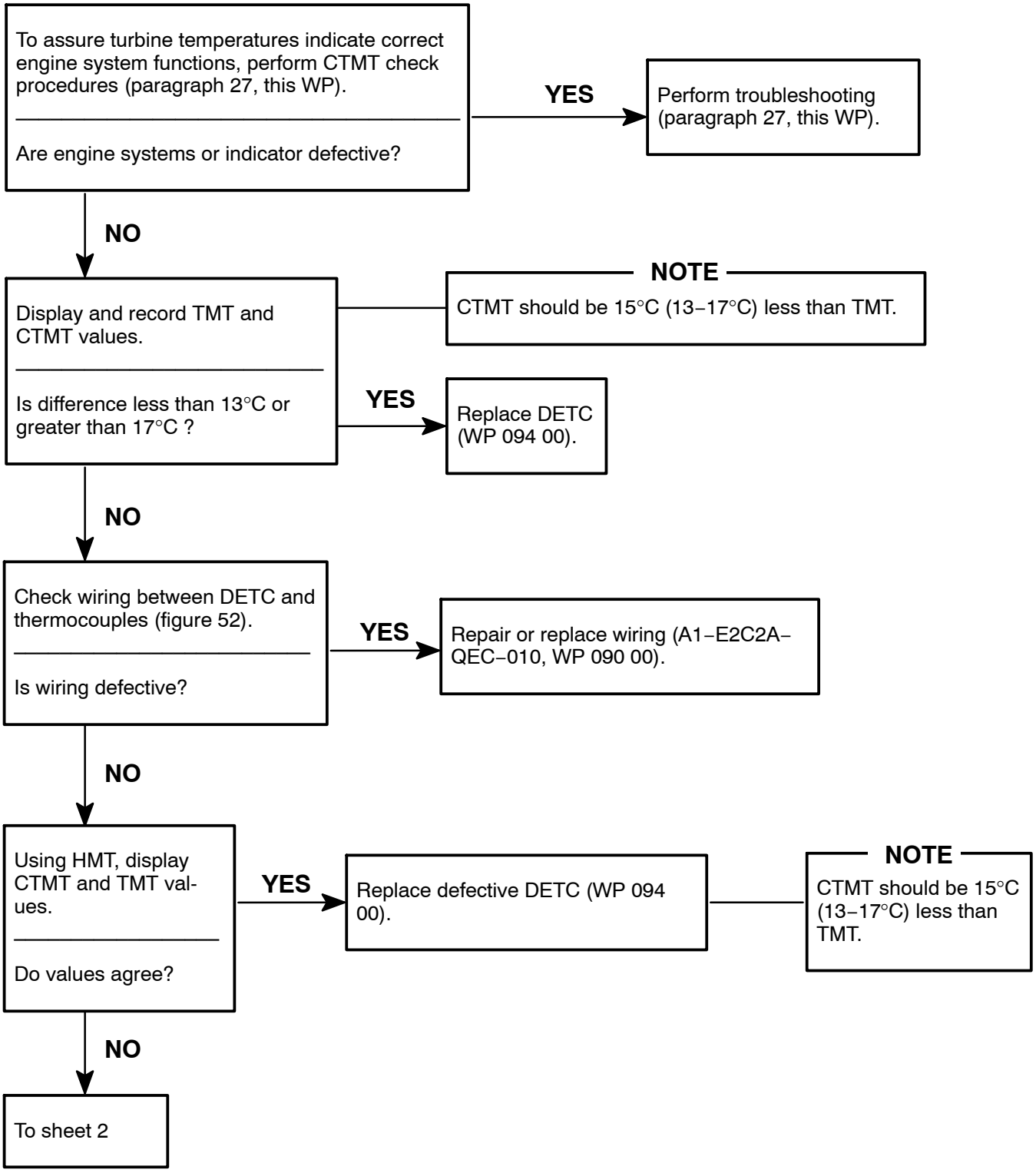

Figure 43. EMS Confirms CTMT Above 875°C (Sheet 1 of 2)

ENGINE TEMPERATURE TROUBLE

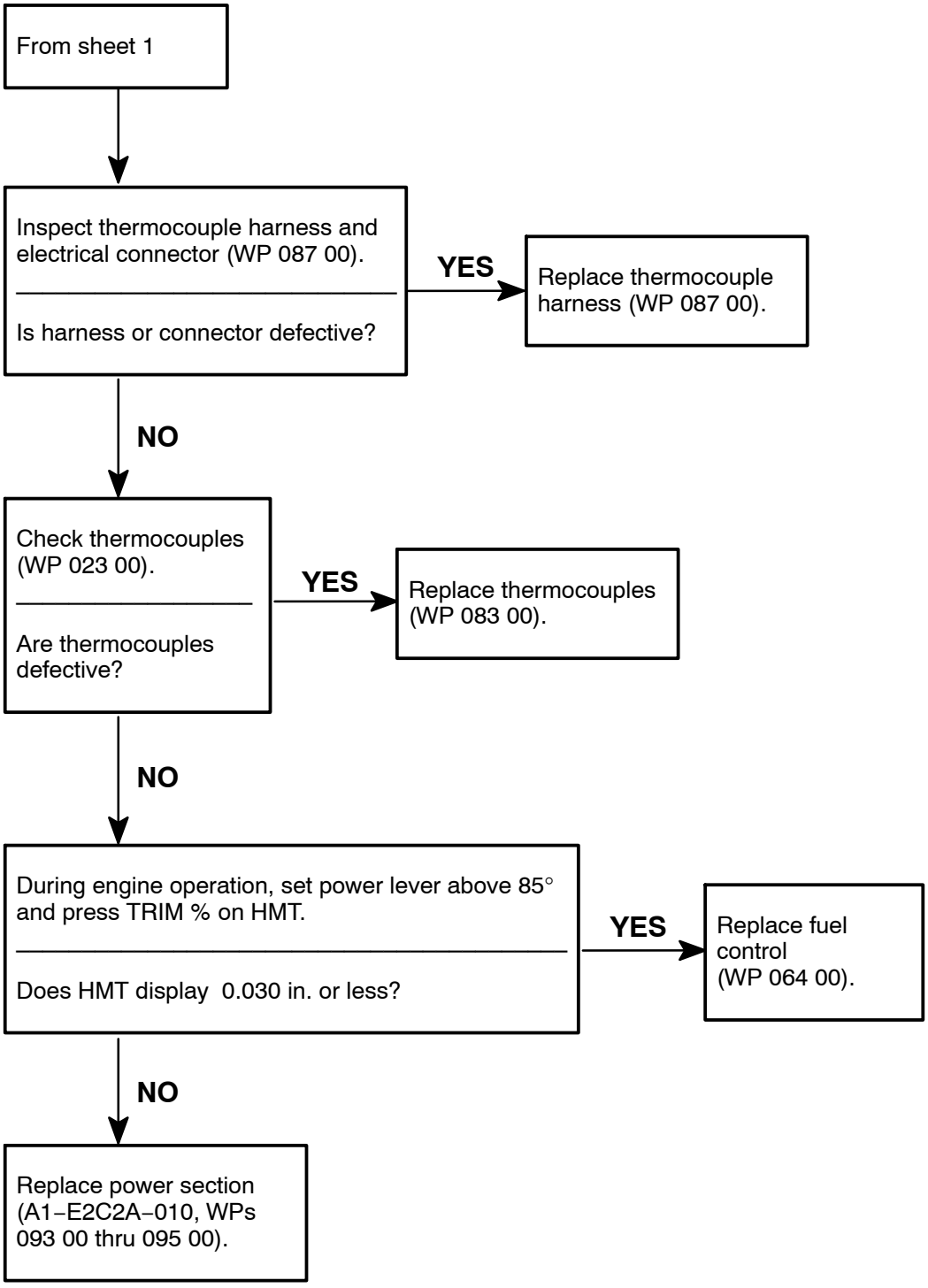

Figure 43. EMS Confirms CTMT Above 875°C (Sheet 2)

ENGINE TEMPERATURE TROUBLE

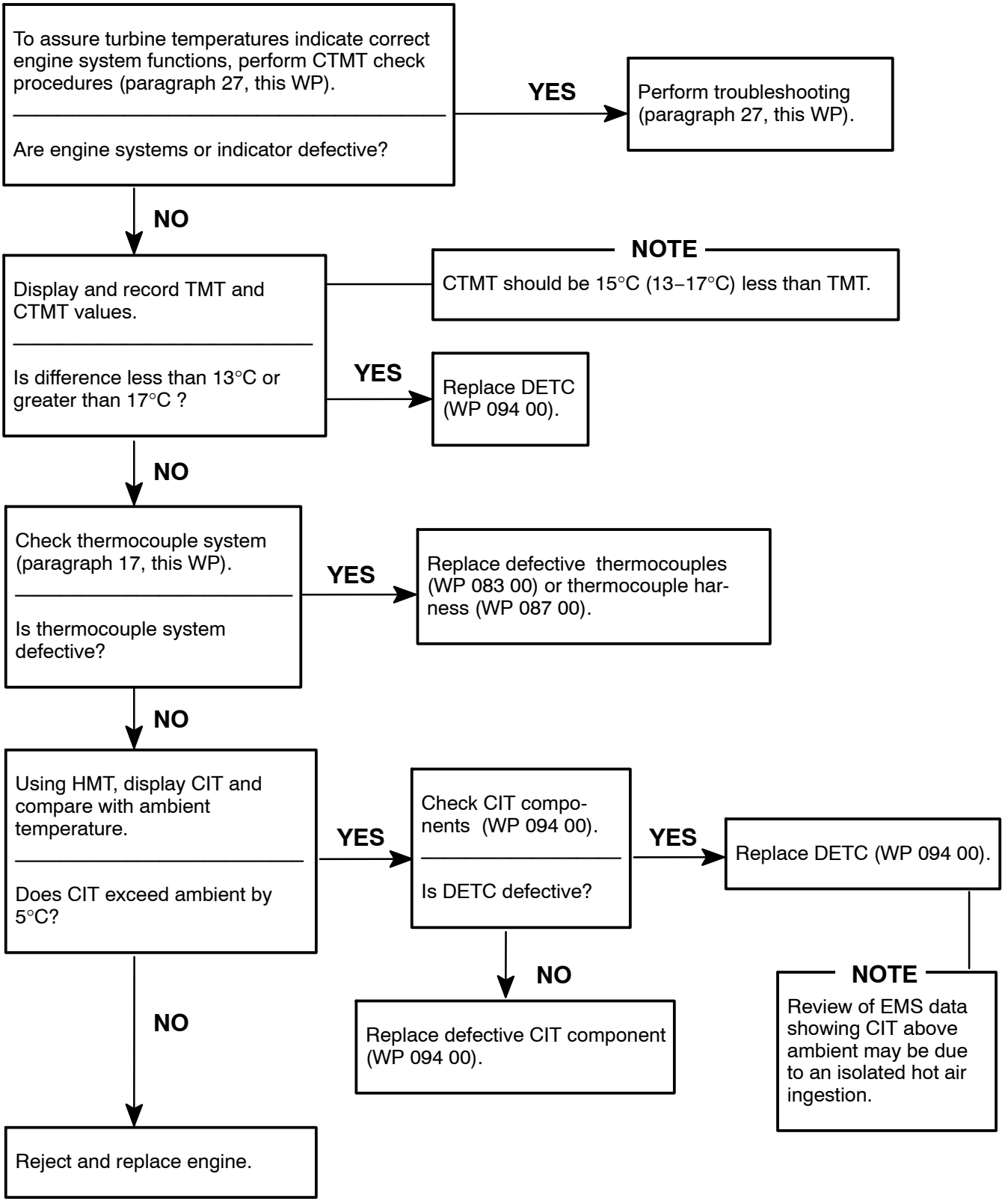

Figure 44. EMS Confirms TMT Above 930°C

ENGINE HORSEPOWER OR FUEL TROUBLE

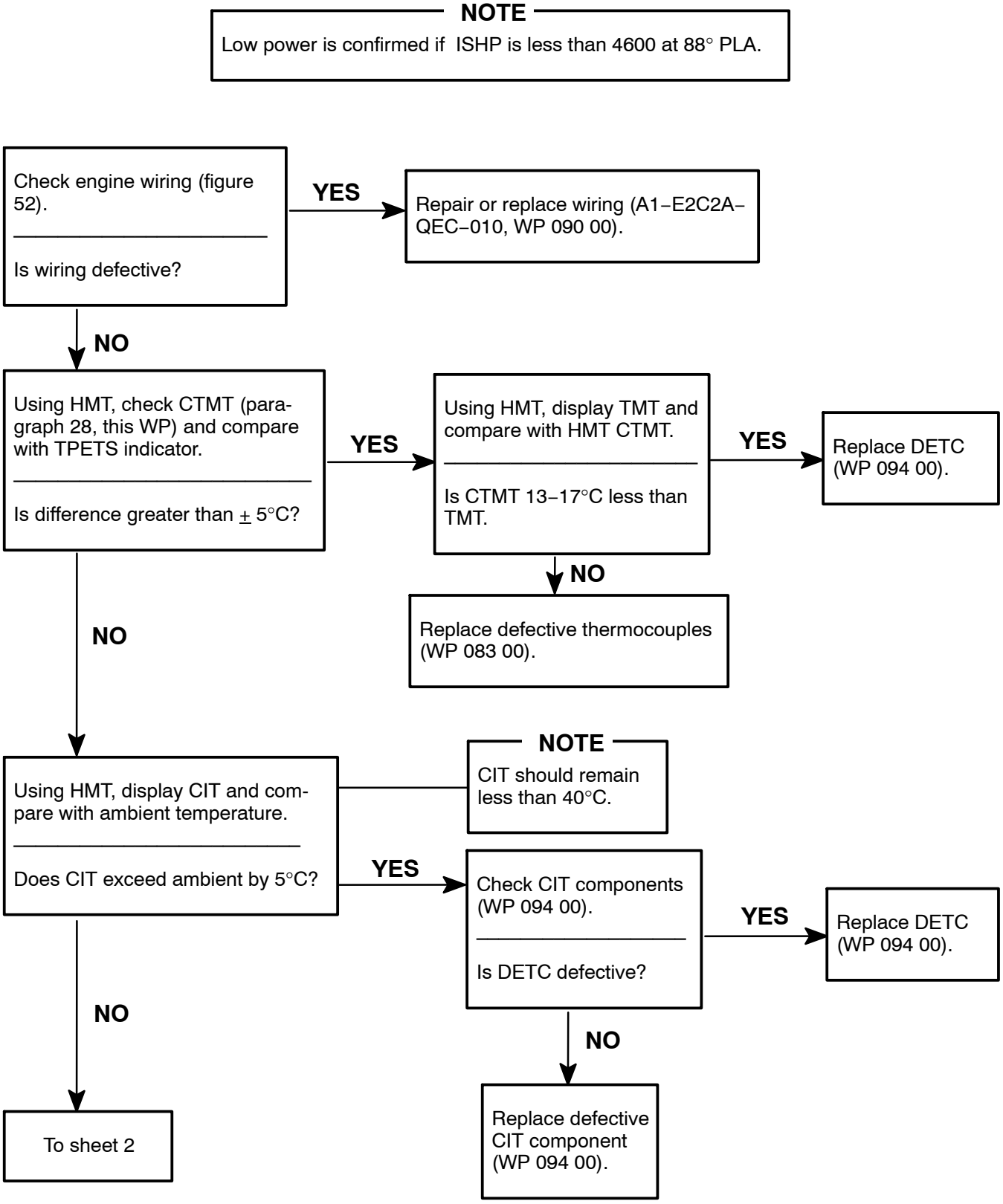

Figure 45. EMS Confirms Low Engine Power (Sheet 1 of 3)

ENGINE HORSEPOWER OR FUEL TROUBLE

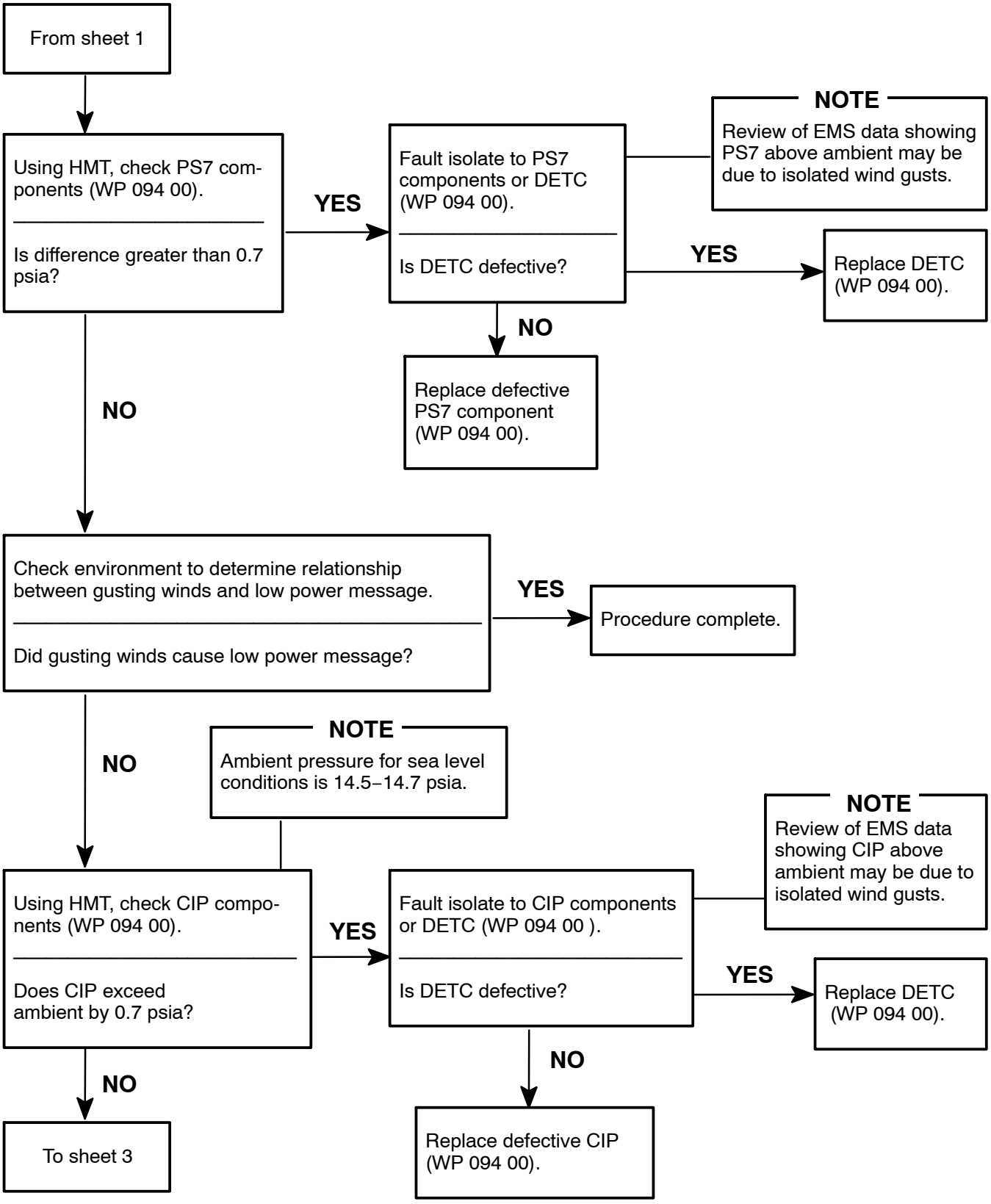

Figure 45. EMS Confirms Low Engine Power (Sheet 2)

ENGINE HORSEPOWER OR FUEL TROUBLE

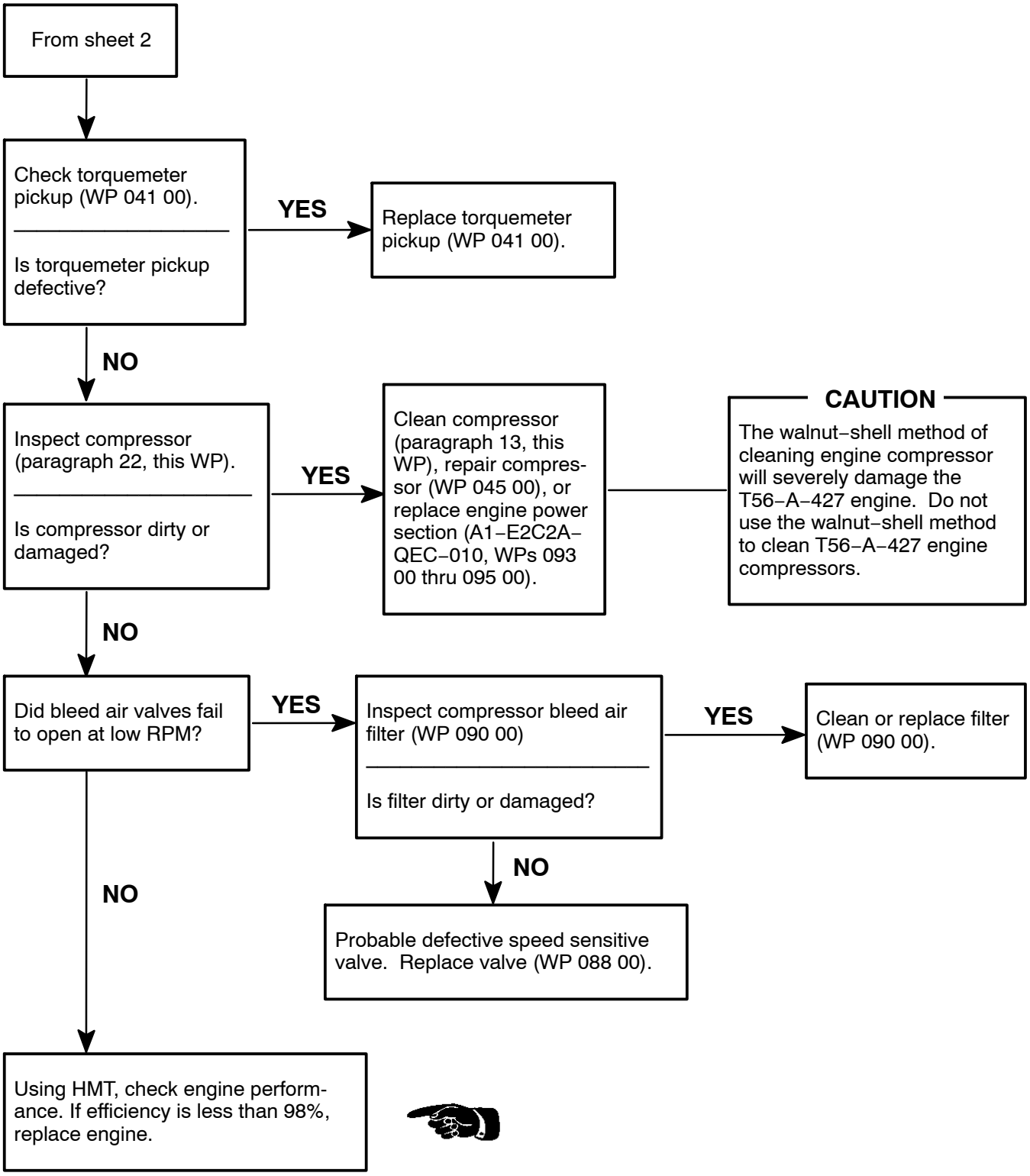

Figure 45. EMS Confirms Low Engine Power (Sheet 3)

ENGINE HORSEPOWER OR FUEL TROUBLE

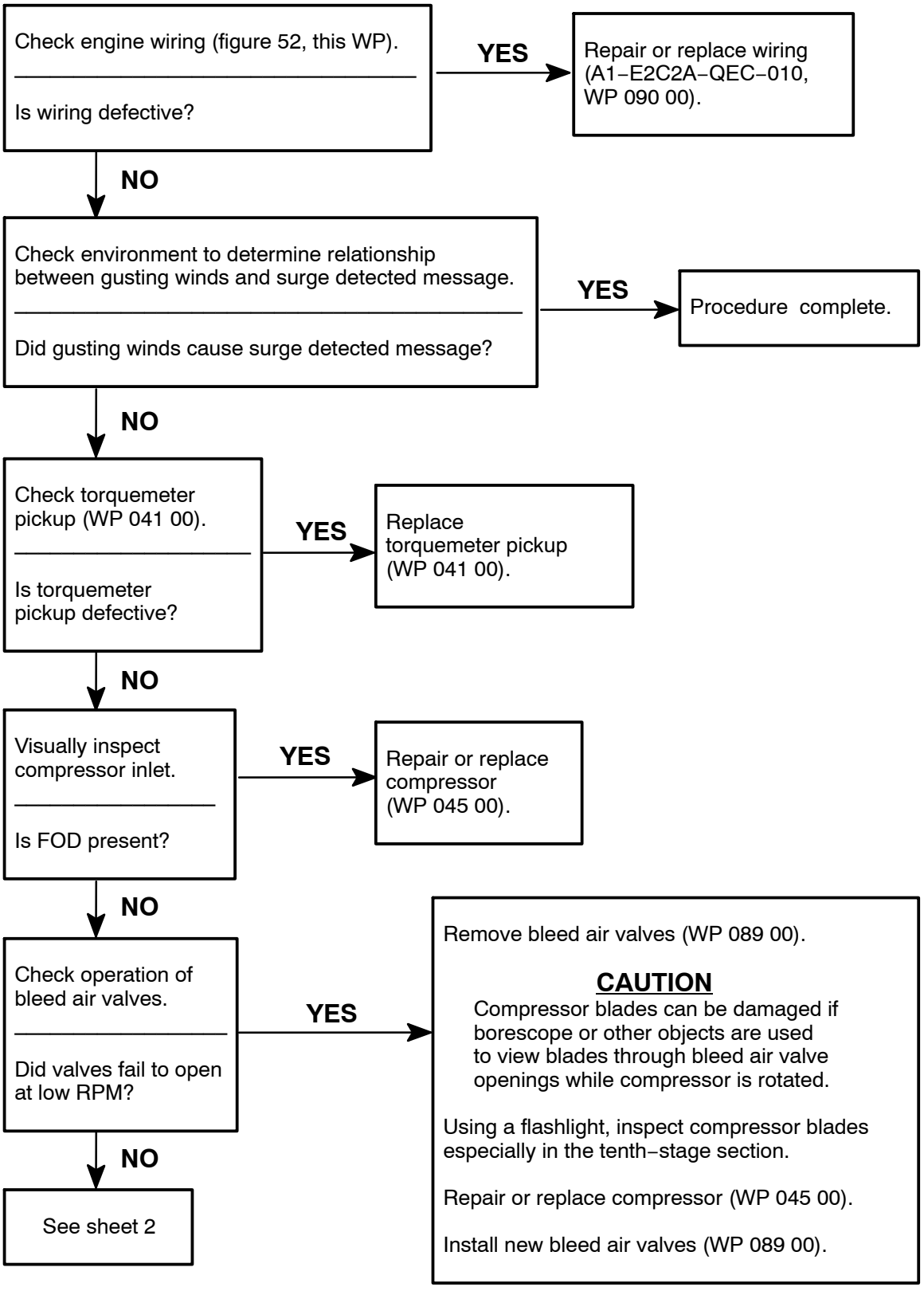

Figure 46. EMS Confirms Surge Detected (Sheet 1 of 2)

ENGINE HORSEPOWER OR FUEL TROUBLE

From sheet 1

Clean compressor (paragraph 13, this WP).

Using HMT, check engine performance. If efficiency is less than 98%, replace engine.

CAUTION

The walnut–shell method of cleaning engine compressors will severely damage the T56–A–427 engine. Do not use the walnut–shell method to clean T56–A–427 engine compressors.

Figure 46. EMS Confirms Surge Detected (Sheet 2)

ENGINE HORSEPOWER OR FUEL TROUBLE

Check engine wiring (figure 52).

Is wiring defective?

YES → Repair or replace wiring (A1–E2C2A–QEC–010, WP 090 00).

NO ↓

Check with TPETS operator to determine if engine was intentionally shut down while condition lever was in RUN position.

Was engine shut down in this condition?

NOTE

The EMS will confirm bogdown under this condition.

YES → Procedure complete.

NO ↓

Check torquemeter pickup (WP 041 00).

Is torquemeter pickup defective?

YES → Replace torquemeter pickup (WP 041 00).

NO ↓

Visually inspect compressor inlet.

Is FOD present?

YES → Repair or replace compressor (WP 045 00).

NO ↓

With engine running at 1500 ISHP, snap– select flight idle.

Do bleed air valves open?

NOTE

Bleed air valves should not open. If valves open, they will make a distinguishable sound.

YES →

Remove bleed air valves (WP 089 00).

CAUTION

Compressor blades can be damaged if borescope or other objects are used to view blades through bleed air valve openings while compressor is rotated.

Using a flashlight, inspect compressor blades especially in the tenth–stage section.

Repair or replace compressor (WP 045 00).

Install new bleed air valves (WP 089 00).

NO ↓

To sheet 2

Figure 47. EMS Confirms Bogdown (Sheet 1 of 2)

ENGINE HORSEPOWER OR FUEL TROUBLE

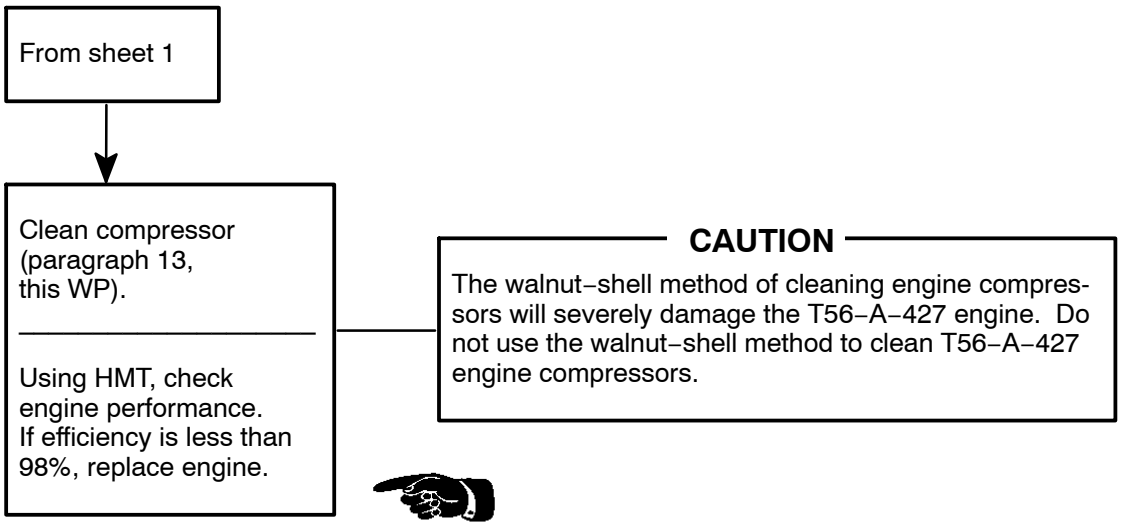

Figure 47. EMS Confirms Bogdown (Sheet 2)

ENGINE HORSEPOWER OR FUEL TROUBLE

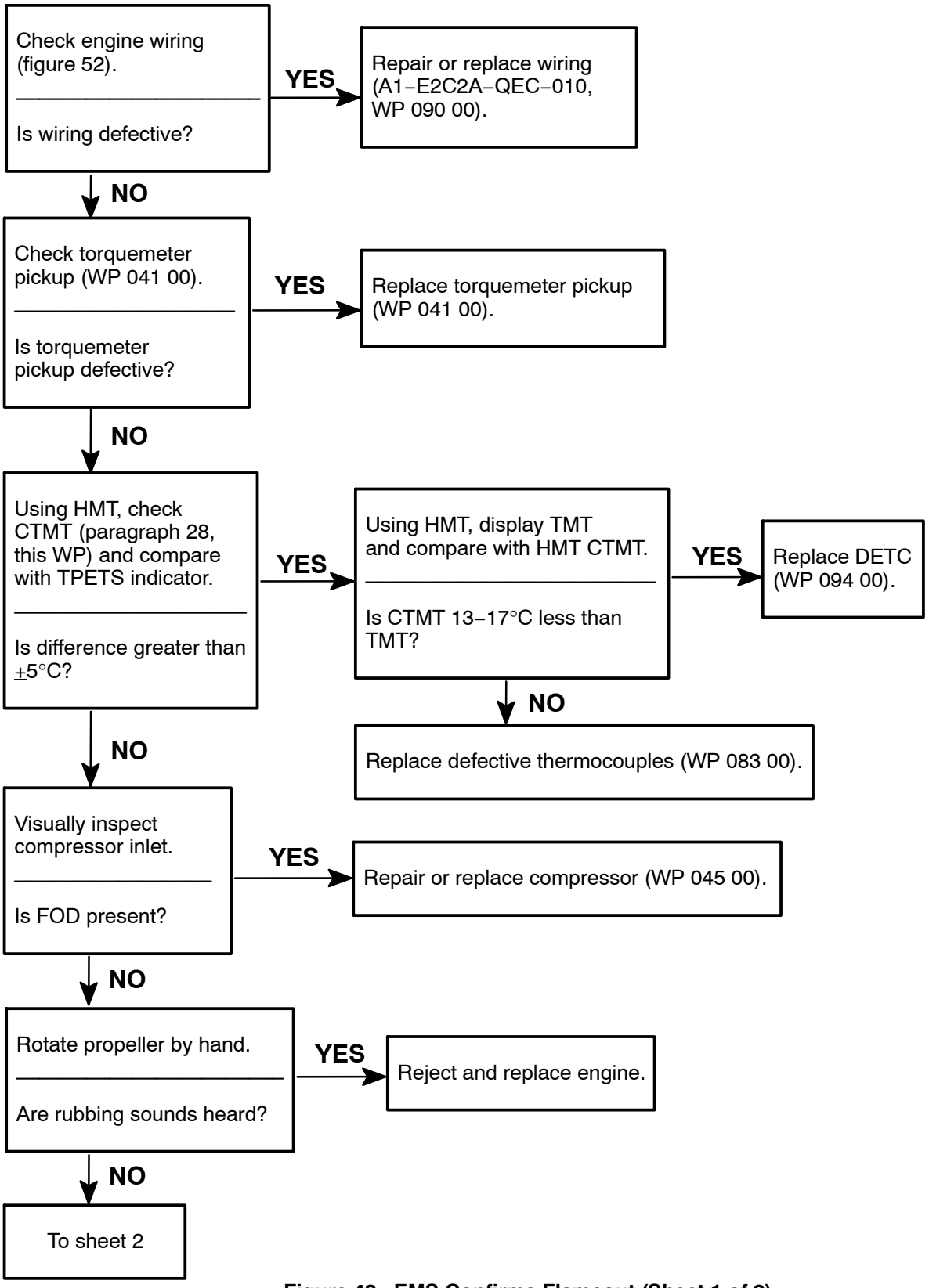

Figure 48. EMS Confirms Flameout (Sheet 1 of 2)

ENGINE HORSEPOWER OR FUEL TROUBLE

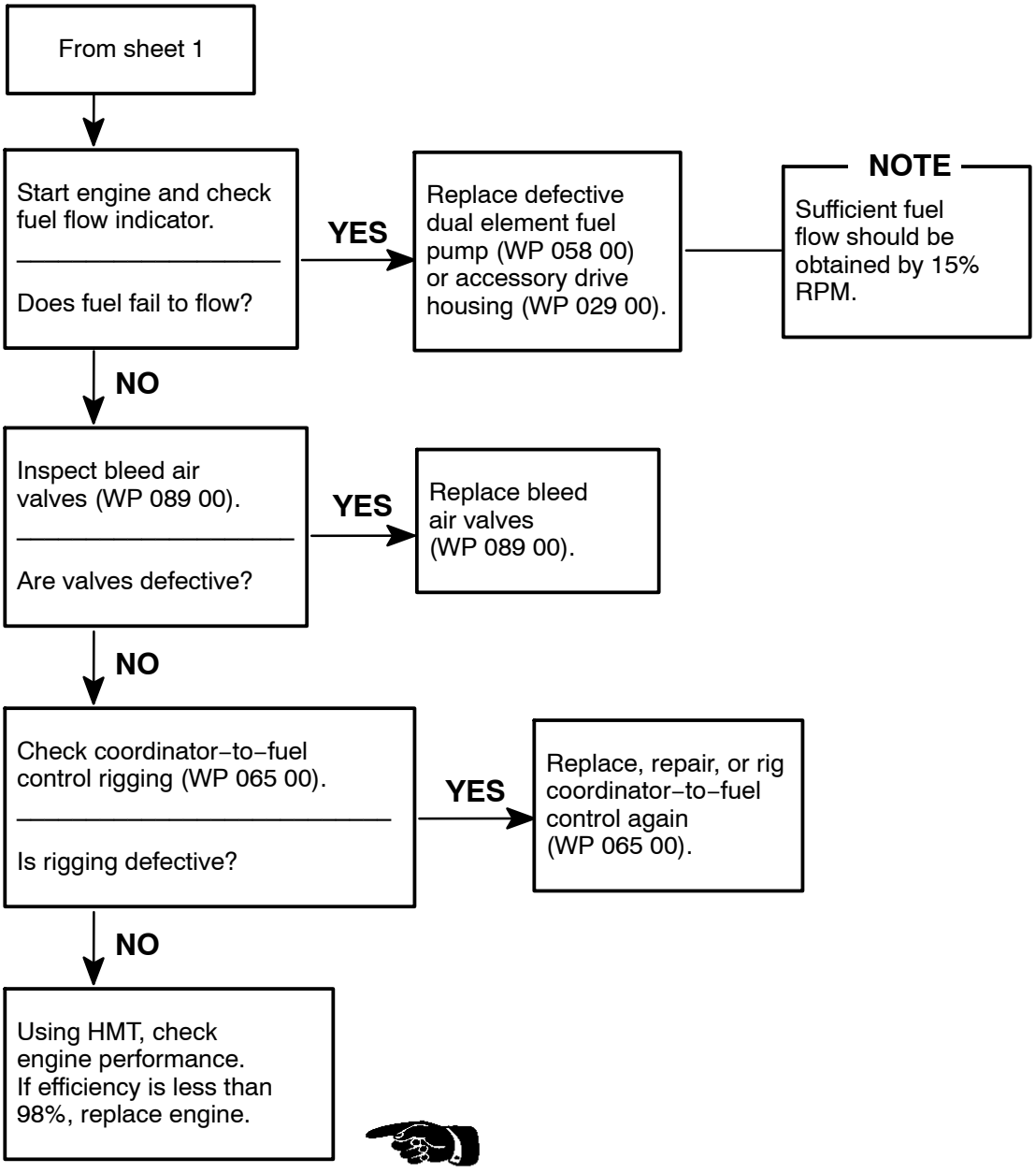

Figure 48. EMS Confirms Flameout (Sheet 2)

ENGINE START OR ACCELERATION TROUBLE

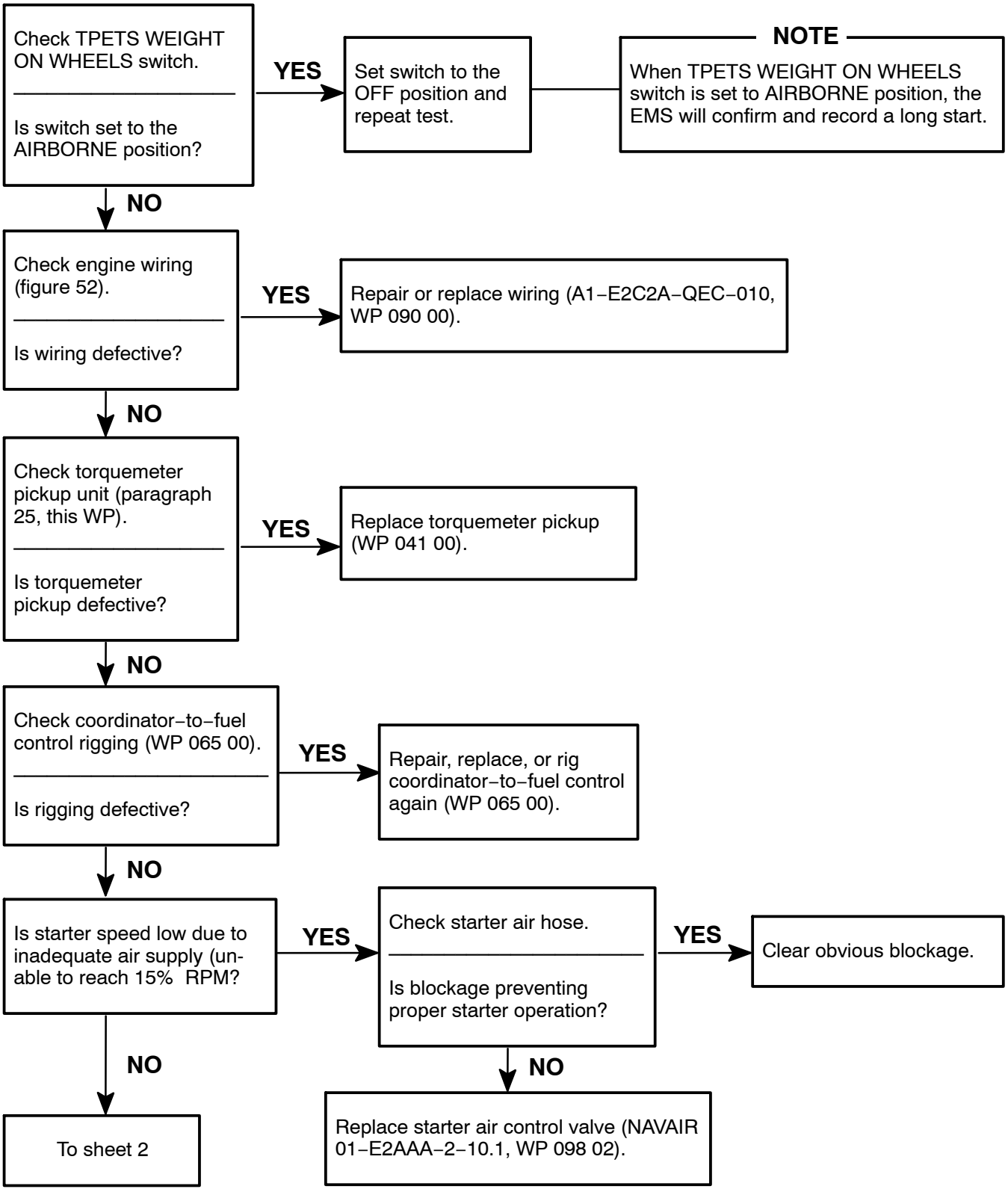

Figure 49. EMS Confirms Long Start (Sheet 1 of 3)

ENGINE START OR ACCELERATION TROUBLE

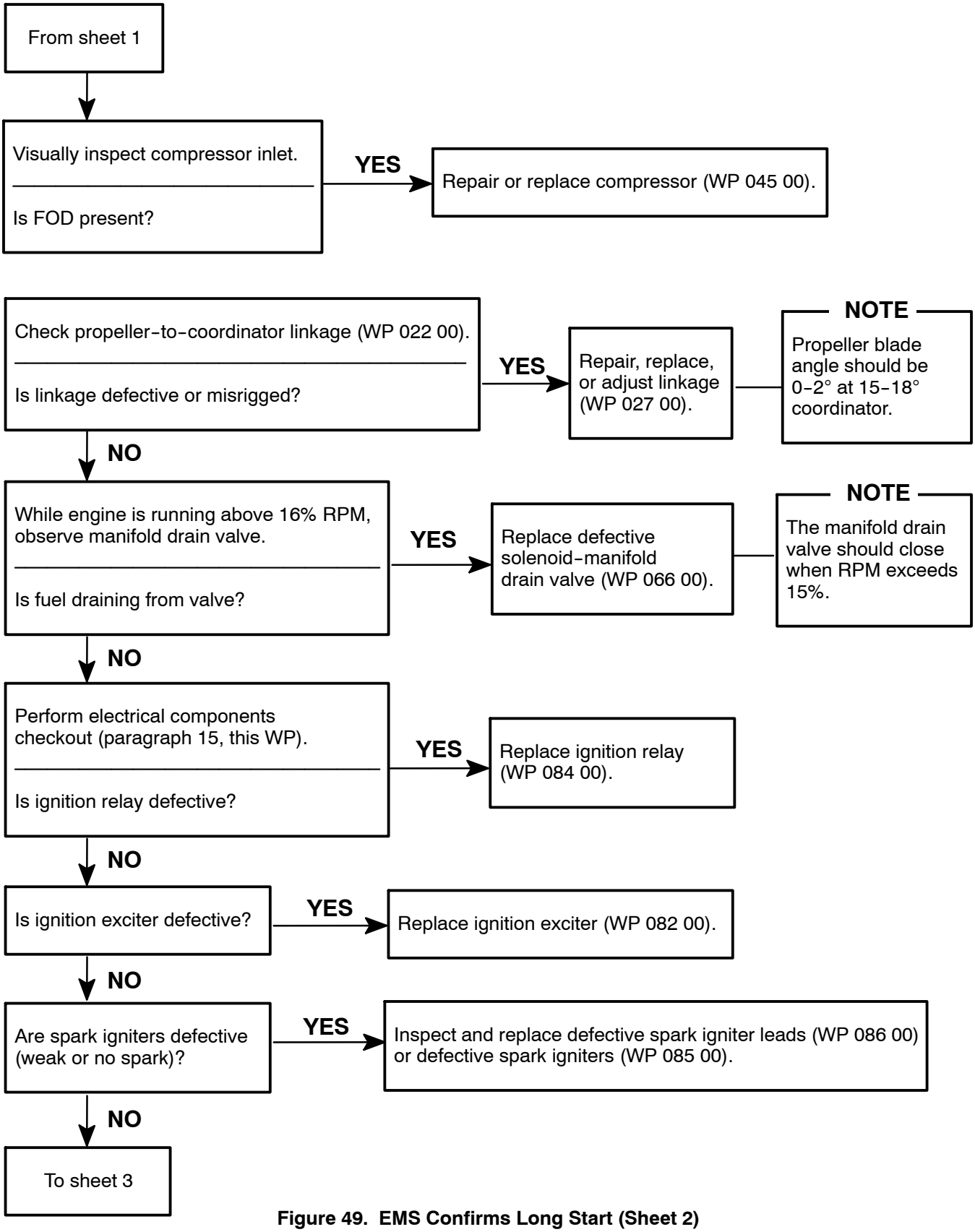

Figure 49. EMS Confirms Long Start (Sheet 2)

ENGINE START OR ACCELERATION TROUBLE

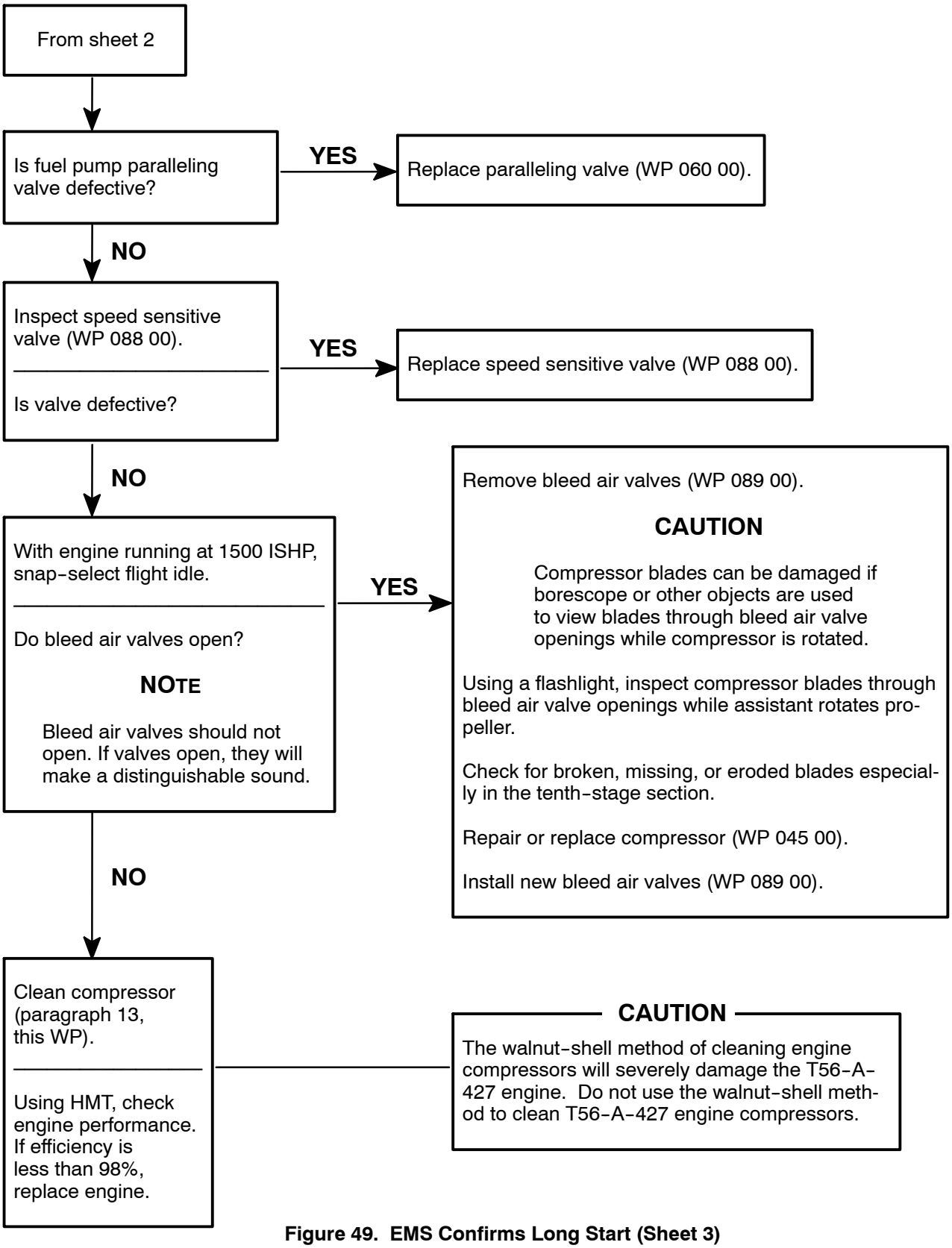

Figure 49. EMS Confirms Long Start (Sheet 3)

ENGINE VIBRATION TROUBLE

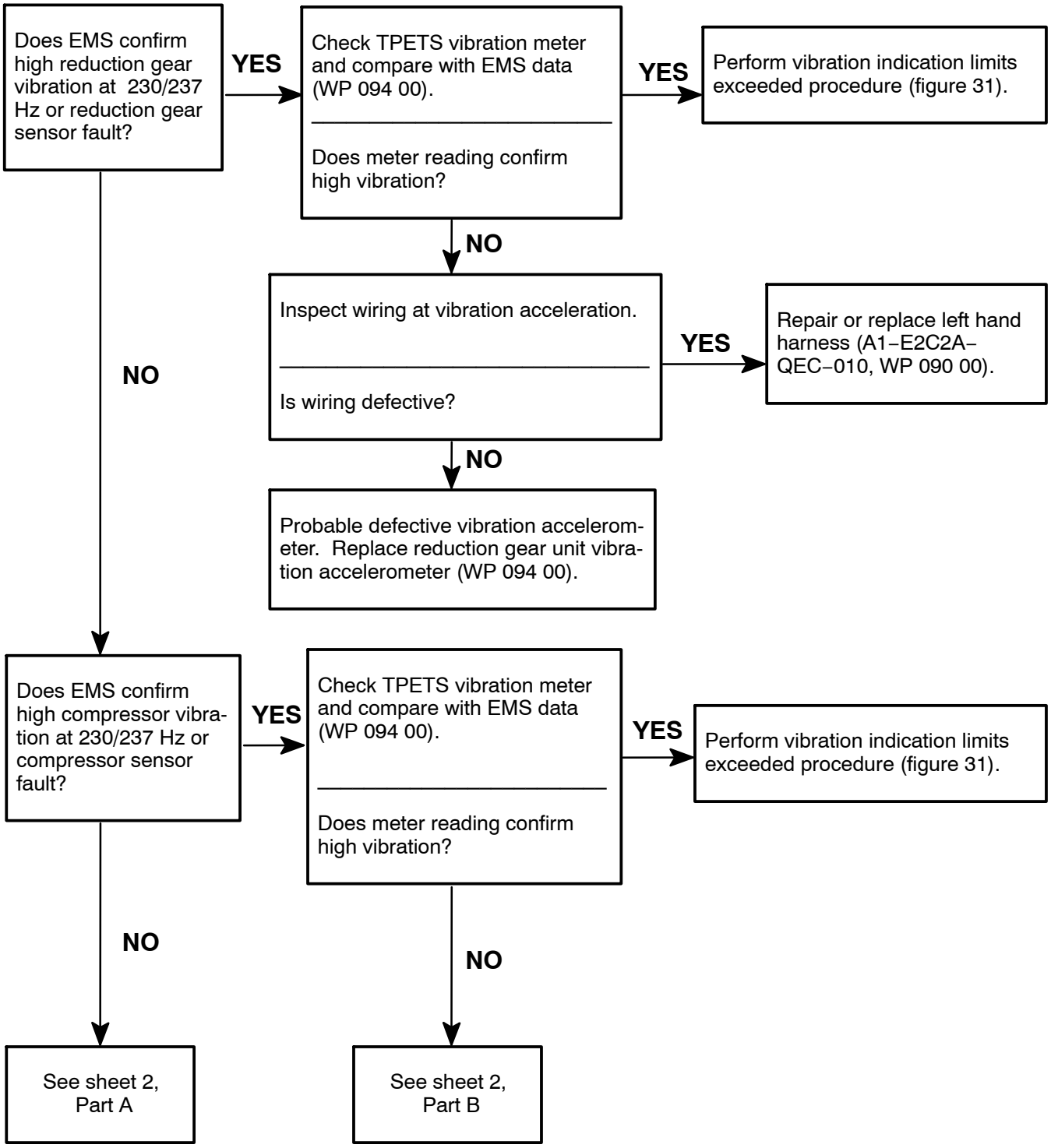

Figure 50. EMS Confirms High Vibration or Vibration Sensor Fault (Sheet 1 of 3)

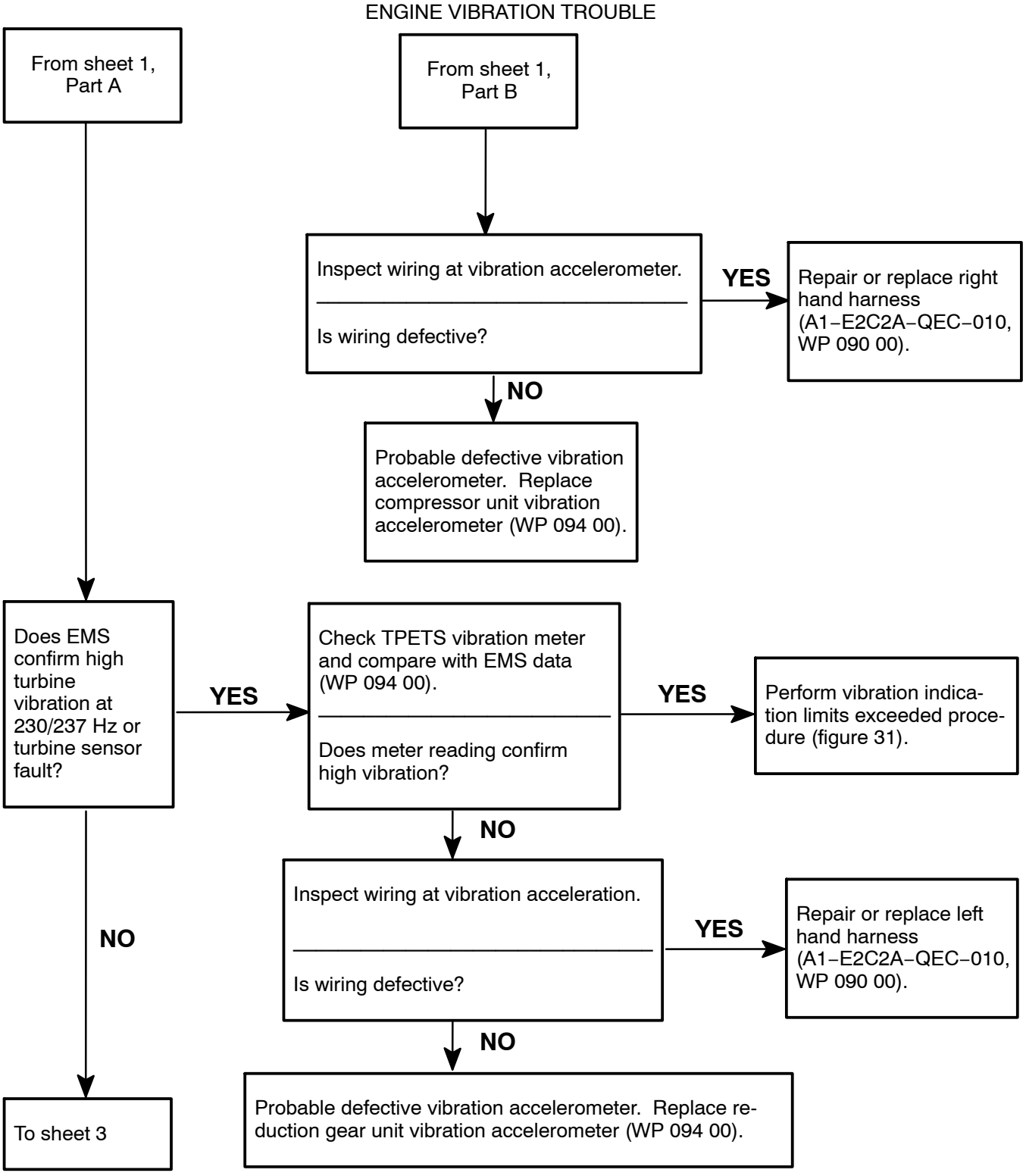

Figure 50. EMS Confirms High Vibration or Vibration Sensor Fault (Sheet 2)

ENGINE VIBRATION TROUBLE

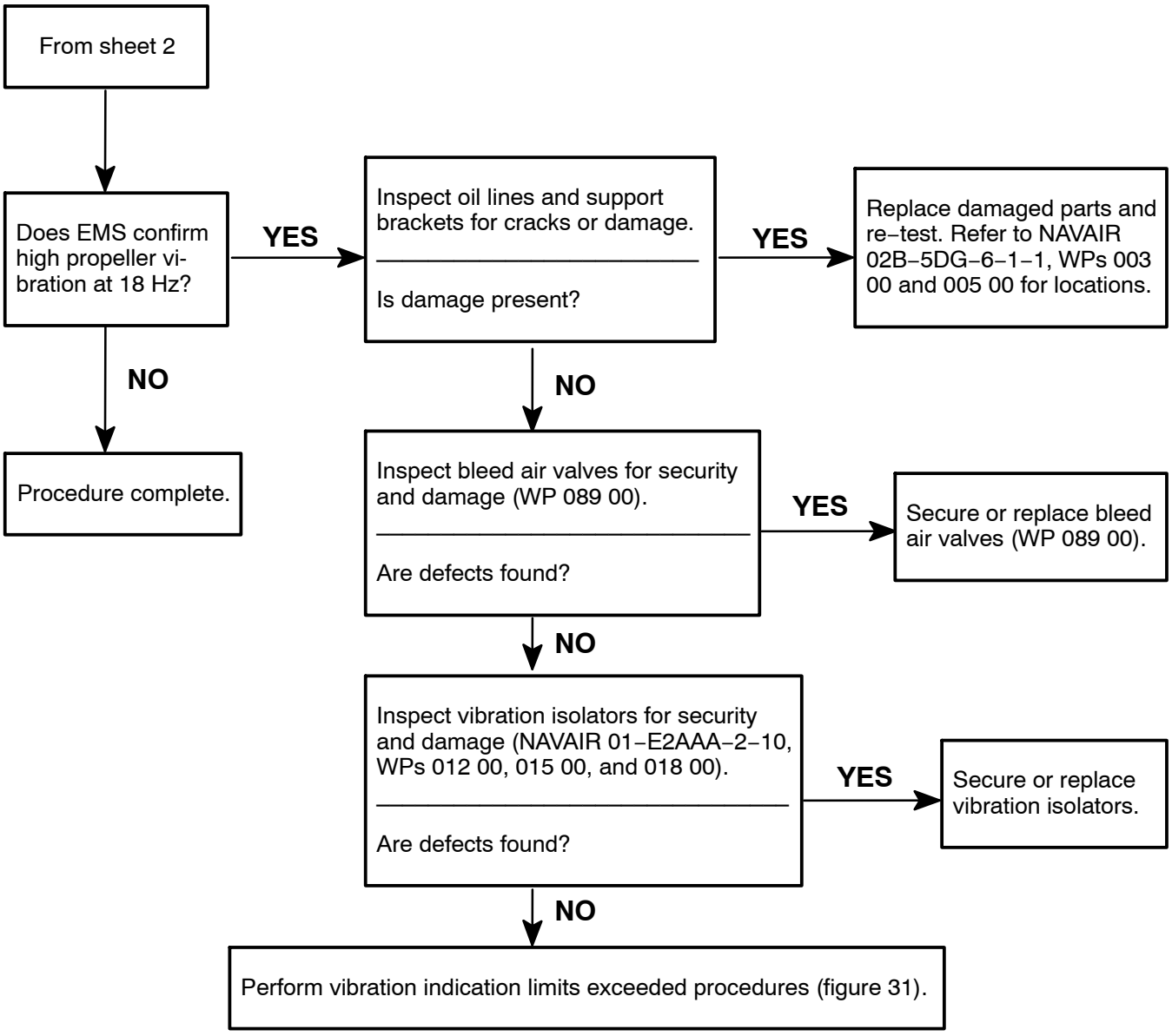

Figure 50. EMS Confirms High Vibration or Vibration Sensor Fault (Sheet 3)

Table 8. Vibration Frequency Bin Definitions
EAU versions 5.1 and earlier

Component	Frequency Bin number	Component Frequency (Hz)	Bin Center Frequency (Hz)	Frequency Band
NOTE				
In–depth isolation is possible by obtaining the EMS vibration summary reports from the EMS ground station. The vibration summary will indicate which bin(s) is seeing an elevated level. Testing has indicated that particular components are excited by frequencies in the bins indicated.				
Prop (1 per – Low Bin)	01	18.4	17.1	15.1–19.1
Prop (1 per – High Bin)	02	18.4	22.0**	20.0–24.0
Tach Drive Bearing	03	26.9	26.9	24.9–28.9
Prop (4 per rev.)	04	73.6	78.1	73.6–82.6
Alternator Drive Gear	05	95, 96, 99.8	95.2	88.3–102.2
Power Section Bearings	06	110.0	112.3	107.8–116.8
Tach Drive Bearing	07	165.0	166.0	161.5–170.5
Accessory Drive Shaft Gear Bearing	08	181.0	180.7	176.2–185.2
Oil in Compressor Rotor	09	195.0	195.3	190.3–199.8
Main Accessory Shaft Gear Bearing	10	215.0	214.8	210.3–219.3
Power Section Rotational Components (during HSGI)	11	230.0	229.5**	225.0–234.0
Power Section Rotational Components (during 100%)	12	237.3	239.3**	234.8–243.8
Hydraulic Pump Idler Bearings	13	264.0	263.7	259.2–268.2
Accessory Idler Gear Bearings	14	292.0	293.0	288.5–297.5
Side Gear Bearing	15	330.0	332.0	327.5–336.5
Accessory Idler Bearing	16	355.0	356.5	352.0–361.0
Hydraulic Pump Idler Bearing	17	414.0	415.0	410.5–419.5
Hydraulic Pump Drive Bearing	18	486.0	485.8	478.8–492.8
Torquemeter Mid–Bearing	19	625.0	625.0	615.6–634.4
Prop Shaft Thrust Bearing	20	717.0	717.8	708.4–727.2
Not Assigned	21	n/a	1025.4	1011.1–1039.7
Nose Scavenge Pump Drive Gear	22	1188.0	1177.1	1165.2–1189.0
Speed Sensitive Valve Drive Gear	23	1356.0	1357.4	1343.1–1371.7
Front Pinion Bearing	24	1434.0	1435.6	1421.3–1449.9
Front Pinion Bearing Race	25	1592.0	1591.8	1577.5–1606.1

**Frequency bin that will illuminate the vibration advisory lights.

Table 9. Vibration Frequency Bin Definitions
EAU versions 6.1 and later

Component	Frequency Bin Number	Component Frequency (Hz)	Bin Center Frequency (Hz)	Frequency Band
NOTE				
In–depth isolation is possible by obtaining the EMS vibration summary reports from the EMS ground station. The vibration summary will indicate which bin(s) is seeing an elevated level. Testing has indicated that particular components are excited by frequencies in the bins indicated.				
Aircraft Components and Connector Noise	01	n/a	12.5	10.0 – 15.0
Prop (1 per – Low Bin)	02	18.4	17.0	15.0 – 19.0
Prop (1 per Rev)	03	18.4	18.5	17.0 – 20.0
Prop (1 per – High Bin)	04	18.4	22.0	20.0 – 24.0
Tachometer Drive Bearing	05	26.9	27.0	25.0 – 29.0
Prop (2 per rev.)	06	36.8	37.0	35.0 – 39.0
Prop (4 per rev.)	07	73.6	73.5	72.0 – 75.0
Alternator Drive Gear	08	95, 96, 99.8	99.0	88.0 – 102.0
Power Section Bearings	09	110.0	112.5	108.0 – 117.0
Power Section Rotational @ LSGI (71%)	10	168.5	169.0	165.0 – 173.0
Tach Drive Bearing	11	165.0	166.0	161.0 – 171.0
Accessory Drive Shaft Gear Bearing	12	181.0	180.5	176.0 – 185.0
Oil in Compressor Rotor	13	195.0	195.0	190.0 – 200.0
Main Accessory Shaft Gear Bearing	14	215.0	215.0	210.0 – 220.0
Power Section Rotational 1 per Rev @ HSGI (97%)	15	230.0	230.0	226.0 – 234.0
Power Section Rotational 1 per Rev. @ 100%	16	237.3	238.0	235.0 – 241.0
Hydraulic Pump Idler Bearings	17	264.0	263.5	259.0 – 268.0
Accessory Idler Gear Bearings	18	292.0	293.0	288.0 – 298.0

**Frequency bin that will illuminate the vibration advisory lights.

13. COMPRESSOR WATER WASH CLEANING PROCEDURE.

Support Equipment Required

Part No./Type Designation	Nomenclature
76E04000–30	Cart, corrosion control

Materials Required

Specification No./Part No.	Nomenclature
B&B 3100	Cleaner, engine, water wash
TC–100	Cleaner, engine, water wash
ZOC–27	Cleaner, engine, water wash

NOTE

This procedure forms a subroutine for troubleshooting procedures contained in figure 22.

a. The 76E04000–30 corrosion control cart may be used to water wash engines on the mobile engine test stand.

NOTE

Do not attempt to clean engine if outside air temperature is 40°F (4.4°C) or below. If engine has been running, allow to cool for a minimum of 45 minutes or until CTMT is less than 150°C (302°F).

b. Prepare for water washing the compressor as follows:

Cleaning Compound B & B 3100, TC–100 and ZOC–27 **26**

(1) Service the wash cart with B&B 3100 cleaner and fresh water.

(2) Position the wash cart clear of the propeller arc.

(3) Connect the wash cart wash hose to the torquemeter shroud anti–icing tube fitting on the left hand side of the engine. Connect the wash cart air hose to the fifth– and tenth–stage bleed valve pneumatic line outlet tube at the speed sensitive valve.

(4) Disconnect the DETC CIP line at the compressor tee fitting and cap line.

(5) Disconnect DETC PS7 line at firewall and capline.

(6) Cap fourteenth–stage bleed air line.

c. Water wash the compressor as follows:

(1) Verify that the position of the circuit breakers and switches are in accordance with the applicable pre–start check list.

(2) Turn ON the electric power source.

(3) Turn OFF the bleed air shutoff valves and ensure that the condition lever is positioned in GRD STOP.

NOTE

The wash cart pressure should not drop below 25 psig during engine wash.

(4) Start the wash cart and build up the operating pressure to 100–120 psig.

(5) Connect and turn on the pneumatic starting unit.

WARNING

Condition levers must be in GRD STOP position to prevent engine lightoff during engine motoring.

CAUTION

Engine motoring and wash cycle must not exceed 60 seconds time period or damage to starter may occur.

(6) With the propeller arc clear of obstructions and the condition lever in GRD STOP, motor the engine using GRD START switch on the control panel.

Cleaning Compound B & B 3100, TC–100 and ZOC–27 **26**

(7) Open the valve on the wash cart to allow a wash mixture (4 parts water to 1 part B & B 3100 cleaner) to pass through the engine.

(8) Stop the engine wash motoring after 60 seconds. Allow the starter to cool and the solution to soak for a minimum of 10 minutes.

(9) Perform the rinse cycle by repeating the wash cycle, allowing only fresh water to flow through the engine.

(10) Allow the starter to cool a minimum of 10 minutes and repeat the rinse cycle a second time.

(11) Inspect engine for soap residue. Repeat step (10) until engine is free of soap residue.

(12) Secure the wash cart, pneumatic starting unit, and electric power.

(13) Disconnect the wash cart and reconnect the torquemeter anti–icing hose, fifth– and tenth–stage bleed air hoses and the fourteenth–stage bleed air lines.

(14) Blow out and reconnect DETC PS7 and CIP lines.

(15) Operate the engine per WP 023 00 at ground idle for a minimum of five minutes following compressor wash. Operate engine anti–icing for a minimum of one minute and open the bleed air shutoff valve.

14. REDUCTION GEAR UNIT FLUSHING PROCEDURE.

Support Equipment Required

Part No./Type Designation	Nomenclature
PON–6	Unit, preoiler and servicing (2)
6796089	Attachment, prop brake release
–––	Wrench, torque (0–300 lb in.)
–––	Wrench, torque (0–500 lb in.)

Materials Required

Specification No./Part No.	Nomenclature
MS20995C32	Lockwire
MIL–PRF–23699	Oil, lubricating
MIL–PRF–680, Type II	Solvent, dry cleaning

NOTE

Elapsed time for the propeller to stop rotating after a normal engine shutdown is not an indication of prop brake condition.

Frequently the prop can be manually manipulated to rotate in reverse. During checks, the ability to cause this slippage does not indicate the prop brake is defective.

Reverse rotation of the prop in flight is unacceptable. If this occurs, the prop brake should be flushed as indicated. If the prop still turns backwards, the prop brake should be replaced.

a. When prop brake failure occurs during testing, check the following:

NOTE

Sludge accumulation in prop brake can prevent proper brake operation and may allow reverse prop rotation when feathered.

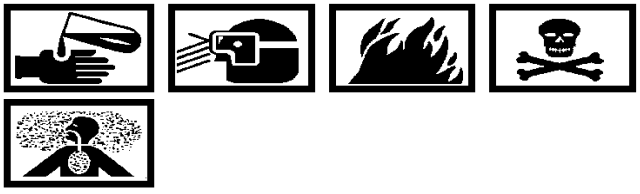

Lubricating Oil, MIL–PRF–23699 **2**

(1) Drain reduction gear oil in a clean container for contamination inspection. Drain oil by removing oil drain plug.

NOTE

An accumulation of bronze particles will usually indicate prop brake damage and is cause for engine removal from stand.

(2) If drained oil, magnetic plug and screen inspection indicate an insignificant accumulation of bronze particles, or if the propeller rotates in reverse at shut down or turns with the wind, flush the reduction gear.

b. This flushing procedure is primarily intended for removal of sludge accumulation from prop brake.

CAUTION

Use separate preoilers for MIL–PRF–680, Type II solvent and MIL–PRF–23699 oil.

Dry Cleaning Solvent
MIL–PRF–680, Type II **3**

(1) Fill designated preoiler and servicing unit (PON–6) with MIL–PRF–680, Type II dry cleaning solvent.

(2) Disconnect oil pressure line and remove reducer bushing.

CAUTION

Do not allow contamination to enter reduction gear.

(3) Insert 6796089 prop brake release attachment in reduction gear oil pressure fitting.

NOTE

Apply 60–100 psi (max 300 psi) air pressure to attachment (this should release brake). Turn propeller in normal direction to verify release.

(4) Remove magnetic plug and oil drain plug from bottom of reduction gear.

Dry Cleaning Solvent
MIL–PRF–680, Type II **3**

(5) Using preoiler, apply MIL–PRF–680, type II dry cleaning solvent to prop brake release attachment at pressure of 90–100 psig.

(6) Cycle brake for one minute by alternately applying and releasing a regulated air pressure of 90–110 psig.

(7) Repeat steps (5) and (6) until ten gallons of solvent has been flushed through the brake.

Lubricating Oil, MIL–PRF–23699 **2**

(8) Fill designated preoiler and servicing unit (PON–6) with MIL–PRF–23699 lubricating oil.

(9) Thoroughly flush reduction gear with MIL–PRF–23699 lubricating oil at a pressure of 90–100 psig through brake release attachment. Continue until oil flow from drains appears as undiluted oil.

(10) Remove prop brake release attachment.

(11) Install adapter fitting. Torque to 140–160 lb in. and lockwire. (QA)

(12) Connect oil pressure line to adapter fitting. Torque to 140–160 lb in. (QA)

(13) Install magnetic plug and oil drain plug. Torque plugs to 240–360 lb in. and lockwire. (QA)

15. ELECTRICAL COMPONENTS CHECKOUT.

Support Equipment Required

Part No./Type Designation	Nomenclature
23030156	Cable set, adapter, electrical components checkout test set
6799150	Test set, electrical components checkout

NOTE

This checkout forms a subroutine for troubleshooting procedure contained in figures 3, 4, 27, 34, 35, and 49.

a. The 6799150 electrical components checkout test set (figure 51) and 23030156 adapter cable set are used to perform the continuity and current checks of individual engine electrical components.

b. Hookup tester and adapter cable assemblies to engine harnesses as follows:

NOTE

The following detail–dash numbers are components of the 23030156 cable set.

(1) Connect detail–203 cable plugs to engine left hand harness receptacle and tester assembly left hand harness receptacle.

(2) Disconnect engine interconnecting wiring harness jumper branch plug from engine left hand wiring harness receptacle. Install detail –205 interconnect device (shorting plug) on left hand harness receptacle.

(3) Connect detail–202 cable plugs to engine right hand wiring harness receptacle and tester assembly right hand harness receptacle.

(4) Connect detail–201 cable plug to 24 V DC receptacle on tester assembly.

(5) Connect detail–204 cable plug to detail –201 cable receptacle.

(6) Connect other plug end of detail –204 cable to 24 V DC external power source receptacle conforming to MIL–P–22438.

(7) Turn power switch ON. Check hookup.

c. Check operation of fuel control shutoff valve solenoid using FUEL SHUTOFF ACTUATOR switch as follows:

(1) Move switch to OPEN – OPEN light ON.

(2) Move switch to CLOSE – OPEN light OFF, CLOSED light ON.

(3) Repeat steps (1) and (2) and release switch. CLOSED light will remain ON after switch is released.

d. Check solenoid/switch of each component listed in table 10.

CAUTION

To prevent the initial current surge from blowing the 2A fuse, the individual component switch shall be actuated before the meter range switch is set in the 2A position.

(1) Perform continuity and current checks by first actuating the individual component switch, then setting the meter range switch in the 2A position.

(2) Indications shall not exceed values shown.

e. For maintenance of 6799150 test set refer to NAVAIR 17–15AC–4.

16. COORDINATOR STATIC CHECK.

Support Equipment Required

Part No./Type Designation	Nomenclature
–––	Multimeter, digital

NOTE

This check forms a subroutine for troubleshooting procedures contained in figures 19, 20, and 21.

a. The engine coordinator contains a potentiometer that is used to establish horsepower schedule with the DETC in CONTROL in relation to power lever setting. It is the purpose of this check to electrically test the potentiometer while coordinator is still installed on engine.

b. Potentiometer Checkout:

(1) Disconnect lower electrical receptacle from back of coordinator.

(2) Using a digital multimeter, make the following resistance checks on coordinator.

CAUTION

Do not have multimeter connected when PLA is between 41 and 44° as this may burn out the potentiometer.

Table 10. Electrical Component Check Requirements

Component	Test Panel Switch	Meter Range	Indication (Amperes @ 24 V DC)
Fuel pump paralleling valve solenoid	PUMP PARA VALVE	2A	0.7–0.9
Secondary pump pressure switch	SECOND PUMP PR SW	2A	0.0
Anti–icing air valve solenoid	ANTI–ICE AIR SOL	2A	0.6–0.9
Ignition exciter	IGNITION EXCITER	20A	7.0–9.0
Ignition relay and 9000 RPM switch	IGNITION RELAY & 9000 RPM SW	2A	OPEN light ON 1.15–1.35

(a) The resistance between pins A and B will increase on a linear scale as the power lever is advanced from 0 to 90° and should be 4700–4800 ohms at maximum PLA (90°). Checks that may be made along the linear scale have the following resistances:

0° PLA = 200–300 ohms
10° PLA = 700–800 ohms
20° PLA = 1200–1300 ohms
30° PLA = 1700–1800 ohms
40° PLA = 2200–2300 ohms
50° PLA = 2700–2800 ohms
60° PLA = 3200–3300 ohms
70° PLA = 3700–3800 ohms
80° PLA = 4200–4300 ohms
90° PLA = 4700–4800 ohms

(b) The resistance between pins A and C should be 4950–5050 ohms and should not change with power lever movement.

(3) If resistances measured above are within prescribed limits, potentiometer is serviceable. Reconnect electrical receptacle.

17. THERMOCOUPLE SYSTEM CHECK.

Support Equipment Required

Part No./Type Designation	Nomenclature
–––	Multimeter, digital

NOTE

This check forms a subroutine for troubleshooting procedures contained in figures 17, 19, 20, 21, and 25.

a. Check complete installed system resistance to ground as follows:

(1) Disconnect interconnecting harness DETC connector.

(2) From pin A, check resistance to ground.

(3) Repeat check from pin B.

(4) The resistance shall not be less than 1,000 ohms.

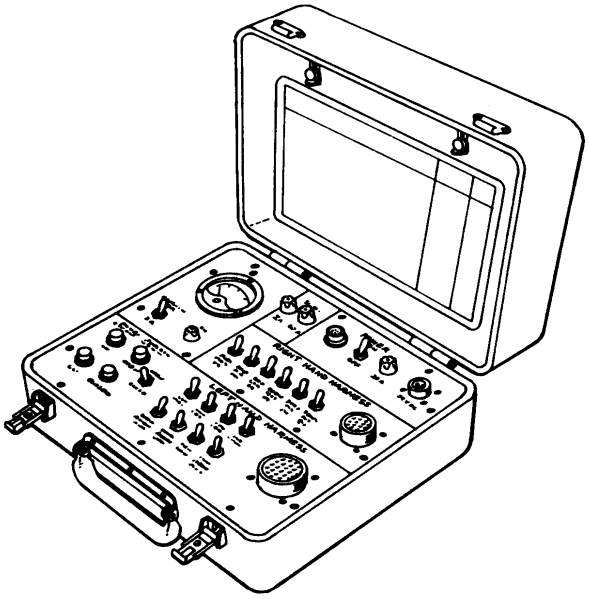

Figure 51. 6799150 Electrical Components Checkout Test Set

NOTE

Resistance less than 1,000 ohms usually indicates moisture in system.

(5) If resistance limit cannot be met, remove system components and check thermocouples individually per WP 083 00. Check thermocouple harness per WP 087 00.

18. TORQUEMETER RUNOUT TEST.

a. Refer to WP 023 00 for torquemeter runout test.

19. OVERSPEED INSPECTION.

NOTE

This inspection forms a subroutine for troubleshooting procedures contained in figure 39.

Engine overspeeds can occur as a result of engine safety coupling/decoupling damage, engine fuel system malfunction, and propeller system malfunction. Overspeeds may be encountered during flight, ground, or test stand operation.

a. If engine speed exceeds 111% (15,805 rpm) or the gage limit, whichever is lower, inspect the engine per this WP. Remove engine for overhaul or local maintenance action, whichever applies, if any of the following discrepancies are observed.

20. Safety Coupling Inspection.

NOTE

Misalignment of safety coupling match marks is not cause for rejection of safety coupling provided that all phases of engine operation are satisfactory.

a. Replace the torquemeter/safety coupling assembly if:

(1) The engine decouples and does not recouple.

(2) The turbine rotor does not turn as the propeller is pulled through in the normal direction of rotation.

(3) The safety coupling makes an audible ratcheting noise while pulling the propeller through the normal direction of rotation.

(4) The engine will not ground start normally.

b. Inspect the reduction gear and power section magnetic oil plugs for evidence of internal engine damage associated with the safety coupling.

21. Power Section Inspection.

a. With DETC /TD CONT switch OFF, motor engine to approximately 16% (2278 rpm) and release starter. Listen for abnormal compressor–to–turbine rub (squeal) during coastdown.

b. Inspect turbine vane casing for fourth–stage turbine blade damage.

c. Inspect the exterior of the compressor case for heat discoloration due to compressor blade tip rub. This is indication that compressor rotor whip has occurred.

d. Run the engine to ensure performance and vibrations are within limits.

e. Remove and visually inspect the power section and reduction gear magnetic oil plugs for metal particles. Note this incident on the engine log.

22. COMPRESSOR AIR INLET BLOCKAGE INSPECTION.

NOTE

This inspection forms a subroutine for troubleshooting procedures contained in figures 1, 4, 5, and 45.

a. Foreign object damage to front of compressor can be detected by direct visual inspection through the compressor air inlet housing. In addition, compressor blades can be checked using a borescope. Refer to WP 023 00.

CAUTION

Blockage or partial blockage of the compressor air inlet by bird remains, cloth, etc. can cause damage which is not detectable by any inspection method until a crack actually appears. If the engine was operated for more than 5 minutes with inlet blockage as evidenced by an appreciable loss in torque output or by a foreign object found lodged in the compressor inlet, remove engine for compressor repair.

b. Use the following guidelines for a blockage or partial blockage of compressor inlet.

(1) Blockage or partial blockage of the engine at the compressor air inlet housing results in a frequency excitation of the compressor blades which may be harmful to blade material if the engine is operated for more than five minutes.

(2) Blockage or partial blockage of the engine at the compressor air inlet housing may be caused by any number and variety of foreign materials that have entered the air inlet duct. These foreign materials may have become lodged around the compressor air inlet housing struts, against the compressor inlet guide vanes, or ingested into the compressor.

(3) Since the excitation time duration cannot be established by inspection of the compressor inlet, visual evidence must be used as the criteria in determining engine disposition.

(4) Evidence of whole or partial remains of foreign material that have lodged around compressor air inlet housing strut (or struts) or lodged against compressor inlet guide vanes in a manner so as to cover two or more vanes must be cause for engine removal and overhaul when the blockage time period is unknown.

(5) Evidence of foreign material, such as trace indications, is indicative that the material may have passed into the compressor. Compressor blade excitation is not a factor in this case and the compressor must be inspected for foreign object damage. If there is no foreign object damage, the engine may be returned to service.

(6) It is recommended that residue on compressor vanes and blades resulting from bird strikes or ingestions be removed by water washing provided the engine is found to be in a serviceable condition.

c. Refer to WP 045 00 for inspection and repair of damaged compressor assembly.

23. ENGINE INSPECTION FOLLOWING SUDDEN ENGINE STOP BY PROPELLER OBJECT STRIKE.

Support Equipment Required

Part No./Type Designation	Nomenclature
PXLM620ASYS or equivalent	Videoprobe, flexible, with defect measuring system
2002AS100–1	Borescope, flexible
2004AS100–1	Source, light fiberoptic
6798917	Borescope

a. Remove the propeller and inspect the reduction gear assembly for cracks.

b. Inspect support mounts and their mounting pads, on reduction gear assembly for cracks and distortion.

c. Inspect reduction gear assembly eyebolt pins and their mounting holes for cracks.

d. Inspect reduction gear assembly–to–power section strut fittings and tie struts for distortion.

e. Inspect compressor air inlet housing.

f. Remove and inspect reduction gear assembly and power section magnetic plugs.

g. Inspect air inlet housing and first–stage compressor rotor blades.

NOTE

When available, Flexible Videoprobe with Defect Measuring System, P/N PXLM620ASYS or equivalent, may be used in place or Flexible Borescope, P/N 2002AS100–1, and Rigid Borescope, P/N 6798917. See WP 023 00 for proper operation of the flexible videoprobe.

h. Remove fifth– and tenth–stage air bleeds. Use flexible videoprobe with defect measuring system, P/N PXLM620ASYS or equivalent, or flexible borescope, P/N 2002AS100–1, with light source, P/N 2004AS100–1, to inspect compressor blades for foreign object damage and blade tip curl. If evidence of blade tip curl, check engine performance.

i. Inspect turbine first stage vanes and blades using flexible videoprobe with defect measuring system, P/N PXLM620ASYS or equivalent, or rigid borescope, P/N 6798917.

j. Check fourth–stage turbine blades and vanes from rear, using a strong light.

k. Remove torquemeter pickup.

l. Inspect exciter teeth and pickup for damage.

m. Rotate engine until X marks are visible on exciter teeth.

n. Check axial alignment of X marks on torquemeter exciter teeth to determine if inner shaft has been twisted.

o. Install propeller and perform engine test run.

p. Check torquemeter readings at minimum torque.

NOTE

A loss exceeding 100 ISHP at minimum torque may indicate a twisted torquemeter shaft. If torquemeter cannot be recalibrated, reject engine.

q. Inspect magnetic plugs for debris.

r. Note this incident on the engine log. After aircraft installation, recheck magnetic plugs every 25 hours of flight time for a duration of 100 flight hours.

24. RPM INDICATING SYSTEM CHECK.	Yes	No
NOTE This check forms a subroutine of troubleshooting procedures contained in figure 8, 16, 17, and 18.		
a. Run engine at flight idle and note actual RPM; or using power lever and table 11 below, adjust engine RPM to the nearest range that can be obtained. Do % RPM limits match the engine RPM selected?	d	b
b. Shut engine down and go to step c.		
c. Using handheld maintenance terminal (HMT), check N1 and N2 values. Are displayed values –0.01 to +0.01?	d	g
d. Start engine, run at ground idle, and go to step e.		
e. Using HMT, check N1 and N2 values. Are values equal?	f	g
f. Compare N1 value to % RPM indicator. Do values agree within +/–0.2%?	i	h
g. Check torquemeter pickup unit (paragraph 26, this WP). Is torquemeter pickup unit check complete?	i	–
h. RPM indicating system is defective.	–	–
i. RPM indicating system check complete.	–	–

Table 11. Engine RPM and % RPM Limits

Range 3		Range 2		Range 1	
RPM	% RPM	RPM	% RPM	RPM	% RPM
8,720	62.5–63.7	11,120	80.0–81.1	13,520	97.2–98.4
8,870	63.6–64.8	11,270	81.0–82.1	13,670	98.3–99.5
9,020	64.7–65.9	11,420	82.0–83.2	13,820	99.4–100.6
9,170	65.8–66.9	11,570	83.1–84.3	13,970	100.5–101.7
9,320	66.8–68.0	11,720	84.2–85.4	14,120	101.6–102.8
9,470	67.9–69.1	11,870	85.3–86.5	14,270	102.7–103.9
9,620	69.0–70.2	12,020	86.4–87.6	14,420	103.8–104.9

TPETS tack from accessory gear box = 13,702 at 100% RPM of 14,239.

25. TORQUEMETER PICKUP UNIT CHECK.	Yes	No
Support Equipment Required		
Part No./Type Designation — **Nomenclature**		
––– — Multimeter, digital		
NOTE		
This check forms a subroutine for troubleshooting procedures contained in figure 49.		
a. Remove interconnecting wiring harness TORQUE PICK–UP connector from torquemeter pickup unit and go to step b.		
b. Using a digital multimeter, measure resistance between torquemeter pickup unit connector pins A and B. Is resistance 2.0–3.0 ohms?	c	h
c. Measure between pins C and D. Is resistance 2.0–3.0 ohms?	d	h
d. Measure between pins E and F. Is resistance 6.2–7.2 ohms?	e	h
e. Measure between pins G and H. Is resistance 6.2–7.2 ohms?	f	h
f. Measure between torquemeter pickup unit housing and pins A thru H. Is resistance infinite?	g	h
g. Measure between pins A and C. Is resistance infinite?	i	h
h. Replace defective torquemeter pickup unit (WP 041 00).	–	–
i. Torquemeter pickup unit check complete.	–	–

26. TACHOMETER INDICATOR/GENERATOR FAULT ISOLATION.	Yes	No
NOTE This procedure forms a subroutine for troubleshooting procedures contained in figures 8, 16, 17, and 18.		
a. Run engine at flight idle, record faulty % RPM reading, and go to step b.		
b. Replace tachometer generator (NAVAIR 01–E2AAA–2–10, WP 070 01) and go to step c.		
c. Run engine at flight idle. Does % RPM indicator read 99.4–100.6% RPM?	d	e
d. A defective tachometer generator was removed in step b.	–	–
e. The actual RPM indicator is defective.	–	–

27. CTMT CHECK.	Yes	No
NOTE This check forms a subroutine for troubleshooting procedures contained in figures 19, 20, 21, 43, 44, 45 and 48. When TD/DEC CONT switch is set to the OFF position, the handheld maintenance terminal (HMT) will not display TMT or CTMT. When in the CONTROL position, the HMT will display TMT or CTMT. The turbine temperature indicator is labeled TIT. When used for testing T56–A–427 engines, the TIT indicator normally displays CTMT.		
a. Set DETC/TD CONT switch to the CONTROL position and go to step b.		
b. Using the HMT, display CIT value. Is CIT less than 32.2°C?	c	d
c. Advance power lever to 70° PLA. Does HMT display ISHP between 3318 and 3468?	d	h
d. Advance power lever to 90° PLA. Does HMT display ISHP between 5025 and 5175?	e	h
e. Using the HMT, display CTMT. Does HMT display a temperature between 862 and 868°C?	f	i
f. Compare CTMT value to TIT indicator value. Does TIT value agree with HMT value within 5°C?	g	j
g. Display TMT value. Does HMT display a temperature between 877 and 883°C?	k	i
h. Troubleshoot low horsepower with DETC switch in CONTROL position (figure 23).	–	–
i. Troubleshoot unable to obtain correct maximum TMT with DETC switch in CONTROL or LIMIT position (figure 19).	–	–
j. Fault isolate to defective TIT indicator (NAVAIR 7–15AH–28, WP 033 00).	–	–
k. CTMT check complete.	–	–

	Yes	No
28. OIL SEAL MAINTENANCE. The following procedures provide static oil leakage inspection and repair criteria. After repairs are completed, safety wire shall be installed on all applicable items. (QA)		
29. Reduction Gear Unit.		
a. Inspect propeller hub, propeller shaft, and reduction gear unit (RGU) housing splitline areas. Is hydraulic fluid or engine oil leakage present?	b	c
b. Remove propeller (NAVAIR 01–E2AAA–2–10.1, WP 123 01) and go to step c.		
c. Wipe excessive fluid or oil from areas around the propeller shaft and reduction gear unit housing and go to step d.		
NOTE Forced air from propeller blades may blow hydraulic fluid or oil leakage from forward engine surfaces. These surfaces include areas between the propeller shaft and reduction gear unit front housing–to–rear housing splitline. Confirmation of leakage and leakage repair at these areas may require engine operation without the propeller installed.		
d. Run engine without propeller (WP 023 00), shut engine down, and go to step e.		
e. Inspect propeller shaft plug (WP 035 00). Is hydraulic fluid leakage present?	f	g
f. Replace propeller shaft plug preformed packing (WP 035 00) and go to step g.		
g. Inspect propeller oil seal (WP 034 00). Is oil leakage present?	h	i
h. Repair propeller (NAVAIR 01–E2AAA–2–10.1, WP 123 03) and go to step i.		
i. Check thrust sensitive signal actuator–to–RGU front housing splitline (WP 036 00). Is oil leakage present?	j	k
j. Replace actuator preformed packing (WP 036 00) and go to step k.		
k. Check pressure relief valve and plugs–to–RGU front housing splitlines (WP 037 00). Is oil leakage present?	l	m
l. Replace pressure relief valve and plugs preformed packings (WP 036 00) and go to step m.		
m. Check negative torque signal (NTS) unit–to–RGU front housing splitline. Is oil leakage present?	n	o
n. Replace NTS unit preformed packing and go step o.		
o. Check RGU front case–to–RGU rear case splitline. Is oil leakage present?	p	q
p. Check torques on splitline bolts and nuts (WP 040 00). (QA) Is additional torque required?	q	bq
q. Check propeller components (NAVAIR 01–E2AAA–2–10.1, WP 123 03). Is hydraulic fluid present?	r	t
r. Repair propeller components (NAVAIR 01–E2AAA–2–10.1, WP 123 03) and go to step s.		
s. Was oil seal maintenance performed in the proceeding steps?	t	v

Reduction Gear Unit (Cont)		Yes	No
	NOTE Forced air from propeller blades may blow hydraulic fluid or oil leakage from forward engine surfaces. These surfaces include areas between the propeller shaft and reduction gear unit front housing–to–rear housing splitline. Confirmation of leakage and leakage repair at these areas may require engine operation without the propeller installed.		
t.	Run engine without propeller (WP 023 00), shut engine down, and go to step u.		
u.	Inspect areas where oil seal maintenance was performed. Is hydraulic fluid or engine oil leakage present?	bq	v
v.	Install propeller (NAVAIR 01–E2AAA–2–10.1, WP 123 01) and go to step w.		
w.	Inspect NTS actuator–to–reduction gear unit (RGU) front case splitline. Is oil leakage present?	x	y
x.	Replace actuator elements (WP 036 00) and go to step y.		
y.	Inspect RGU front case–to–rear splitline. Is oil leakage present?	z	ab
z.	Check torque on splitline bolts and nuts (WP 040 00). Is additional torque required? (QA)	aa	bq
aa.	Perform engine leak test (WP 023 00) and inspect RGU front case–to–rear case splitline. Does oil leakage continue?	bq	ab
ab.	Inspect starter–to–RGU rear case splitline. Is oil leakage present?	ac	ad
ac.	Replace starter pad oil seal (WP 033 00) and go to step ad.		
ad.	Inspect generator–to–RGU rear case splitline. Is oil leakage present?	ae	af
ae.	Replace generator pad oil seal (WP 033 00) and go to step af.		
af.	Inspect hydraulic pumps–to–RGU rear case splitlines. Is oil leakage present?	ag	ah
ag.	Replace applicable hydraulic pump pad oil seal (WP 033 00) and go to step ah.		
ah.	Inspect RGU oil plugs and pressure relief valve (WP 037 00). Is oil leakage present?	v	y
ai.	Check torques on plugs, bolts, and valve (WP 037 00). Is additional torque required? (QA)	aj	ak
aj.	Perform engine leak test an inspect plugs and valve. Does oil leakage continue?	ak	al
ak.	Replace leaking plug or valve performed packing or gasket (WP 037 00) and go to step al.		
al.	Inspect RGU rear cover–to–oil pump body splitline. Is oil leakage present?	am	ap
am.	Check torque on splitline nuts (WP 070 00). Is additional torque required? (QA)	an	ao
an.	Perform engine leak test and inspect rear cover–to–oil pump body splitline. Does oil leakage continue?	ao	ap
ao.	Replace small packings at oil filter and oil pump body cover adjusting valve (WP 070 00) and go to step ac.		
ap.	Inspect RGU oil pump–to–oil filter splitline. Is oil leakage present?	aq	at

Reduction Gear Unit (Cont)	Yes	No
aq. Check torque on oil filter nuts. Is additional torque required? (QA)	ar	as
ar. Perform engine leak test and inspect oil pump–to–oil filter splitline. Does oil leakage continue?	as	at
as. Replace large packing at oil filter (WP 071 00) and go to step at.		
at. Inspect RGU oil pump–to–oil pump body cover splitline. Is oil leakage present?	au	ax
au. Check torque on pump body cover nuts (WP 071 00). Is additional torque required? (QA)	av	aw
av. Perform engine leak test and inspect oil pump–to–oil pump body cover splitline. Does oil leakage continue?	aw	ax
aw. Replace large packing at oil pump body cover (WP 070 00) and go to step ax.		
ax. Inspect RGU oil pump body–to–magnetic plug splitline. Is oil leakage present?	ay	bb
ay. Check torque on magnetic plug (WP 072 00). Is additional torque required? (QA)	az	ba
az. Perform engine leak test and inspect oil pump body–to–magnetic plug splitline. Does oil leakage continue?	ba	bb
ba. Replace magnetic plug and preformed packing (WP 072 00) and go to step bb.		
bb. Inspect thrust sensitive switch–to–RGU front cover splitline. Is oil leakage present?	bc	bd
bc. Replace switch pad preformed packing (WP 080 00) and go to step bd.		
bd. Inspect torquemeter–to–RGU rear cover splitline. Is oil leakage present?	be	bh
be. Check torque on splitline nuts (WP 028 00). Is additional torque required? (QA)	bf	bg
bf. Perform engine leak test and inspect torquemeter–to–RGU splitline. Does oil leakage continue?	bg	bh
bg. Replace performed packing at torquemeter–to–RGU splitline (WP 028 00) and go to step bh.		
bh. Inspect torquemeter housing–to–torquemeter pickup splitline. Is oil leakage present?	bi	bl
bi. Check torque on torquemeter pickup splitline bolts (WP 041 00). Is additional torque required? (QA)	bj	bk
bj. Perform engine leak test an inspect torquemeter housing–to–torquemeter pickup splitline. Does oil leakage continue?	bk	bl
bk. Replace splitline preformed packing (WP 041 00) and go to step bl.		
bl. Inspect torquemeter housing–to–power section unit splitline. Is oil leakage present?	bm	bp
bm. Check torque on splitline nuts (WP 027 00). Is additional torque required? (QA)	bn	bo
bn. Perform engine leak test and inspect torquemeter housing–to–power section unit splitline. Does oil leakage continue?	bo	bp
bo. Replace splitline preformed packing (WP 028 00) and go to step bp.		
bp. RGU oil seal maintenance complete.	–	–
bq. Replace RGU (WP 027 00).	–	–

30. Power Section.	Yes	No
a. Inspect accessory drive housing–to–compressor splitline. Is oil leakage present?	b	d
b. Check torque on splitline bolts (WP 029 00). Is additional torque required? (QA)	c	ao
c. Perform engine leak test (WP 023 00) and inspect accessory drive housing–to–compressor splitline. Does oil leakage continue?	ao	d
d. Inspect accessory drive housing cover–to–accessory drive housing splitline. Is oil leakage present?	e	g
e. Check torque on splitline nuts (WP 044 00). Is additional torque required? (QA)	f	ao
f. Perform engine leak test and inspect accessory drive cover–to–accessory drive housing splitline. Does oil leakage continue?	ao	g
g. Inspect power section magnetic plug–to–pressure and scavenge oil pump cover splitline. Is oil leakage present?	h	i
h. Replace splitline preformed packing (WP 073 00) and go to step i.		
i. Inspect adapters and plugs–to–accessory drive housing assembly splitlines. Is oil leakage present?	j	m
j. Check torques on adapters and plugs (WP 044 00). Are additional torques required? (QA)	k	l
k. Perform engine leak test and inspect accessory drive housing assembly–to–plugs and adapters split lines. Does oil leakage continue?	l	m
l. Replace plugs and adapters preformed packings (WP 044 00) and go to step m.		
m. Inspect main oil filter–to–accessory drive housing cover splitline. Is oil leakage present?	n	q
n. Check torque on six splitline nuts (WP 077 00). Is additional torque required? (QA)	o	p
o. Perform engine leak test and inspect main oil filter–to–accessory drive housing cover splitline. Does oil leakage continue?	p	q
p. Replace splitline preformed packing (WP 077 00) and go to step q.		
q. Inspect main oil filter cover–to–center bolt splitline. Is oil leakage present?	r	s
r. Replace splitline preformed packing (WP 077 00) and go to step s.		
s. Inspect main pressure and scavenge oil pump–to–accessory drive housing cover splitline. Is oil leakage present?	t	v
t. Check torque on splitline nuts (WP 075 00). Is additional torque required? (QA)	u	ao
u. Perform engine leak test and inspect main pressure and scavenge oil pump–to–accessory drive housing splitline. Does oil leakage continue?	v	x
v. Inspect main pressure and scavenge oil pump housing–to–cover splitline. Is oil leakage present?	ao	w
w. Inspect power section pressure regulating valve–to–main pressure and scavenge oil pump cover splitline. Is oil leakage present?	x	y
x. Replace valve cap preformed packing (WP 076 00) and go to step y.		

Power Section (Cont)	Yes	No
y. Inspect external scavenge oil pump–to–accessory drive housing splitline. Is oil leakage present?	z	ac
z. Check torque on splitline nuts (WP 078 00). Is additional torque required? (QA)	aa	ab
aa. Perform engine leak test and inspect external scavenge oil pump–to–accessory drive housing splitline. Does oil leakage continue?	ab	ac
ab. Replace external scavenge oil pump preformed packing (WP 078 00) and go to step ac.		
ac. Inspect external scavenge oil pump–to–fittings and fittings–to–tubing splitlines. Is oil leakage present?	ad	ag
ad. Check torque on fittings and tubing. Is additional torque required? (QA)	ae	af
ae. Perform engine leak test and inspect external scavenge oil pump fittings and tubing splitlines. Does oil leakage continue?	af	ag
af. Replace fittings preformed packing, defective fittings, or defective tubing (WP 078 00) and go to step ag.		
ag. Inspect dual element fuel pump–to–accessory drive housing splitline. Is oil leakage present?	ah	aj
ah. Check torque on splitline nuts (WP 058 00). Is additional torque required? (QA)	ai	ao
ai. Perform engine leak test and inspect dual element fuel pump–to–accessory drive housing splitline. Does oil leakage continue?	ao	aj
aj. Inspect fuel control–to–accessory drive housing splitline. Is oil leakage present?	ak	an
ak. Check torque on splitline nuts and V–band clamp nut. Is additional torque required? (QA)	al	am
al. Perform engine leak test and check fuel control–to–accessory drive housing splitline. Does oil leakage continue?	am	an
am. Replace preformed packings (WP 064 00) and go to step an.		
an. Power section oil seal maintenance complete.	–	–
ao. Replace accessory drive housing assembly (WP 029 00).	–	–

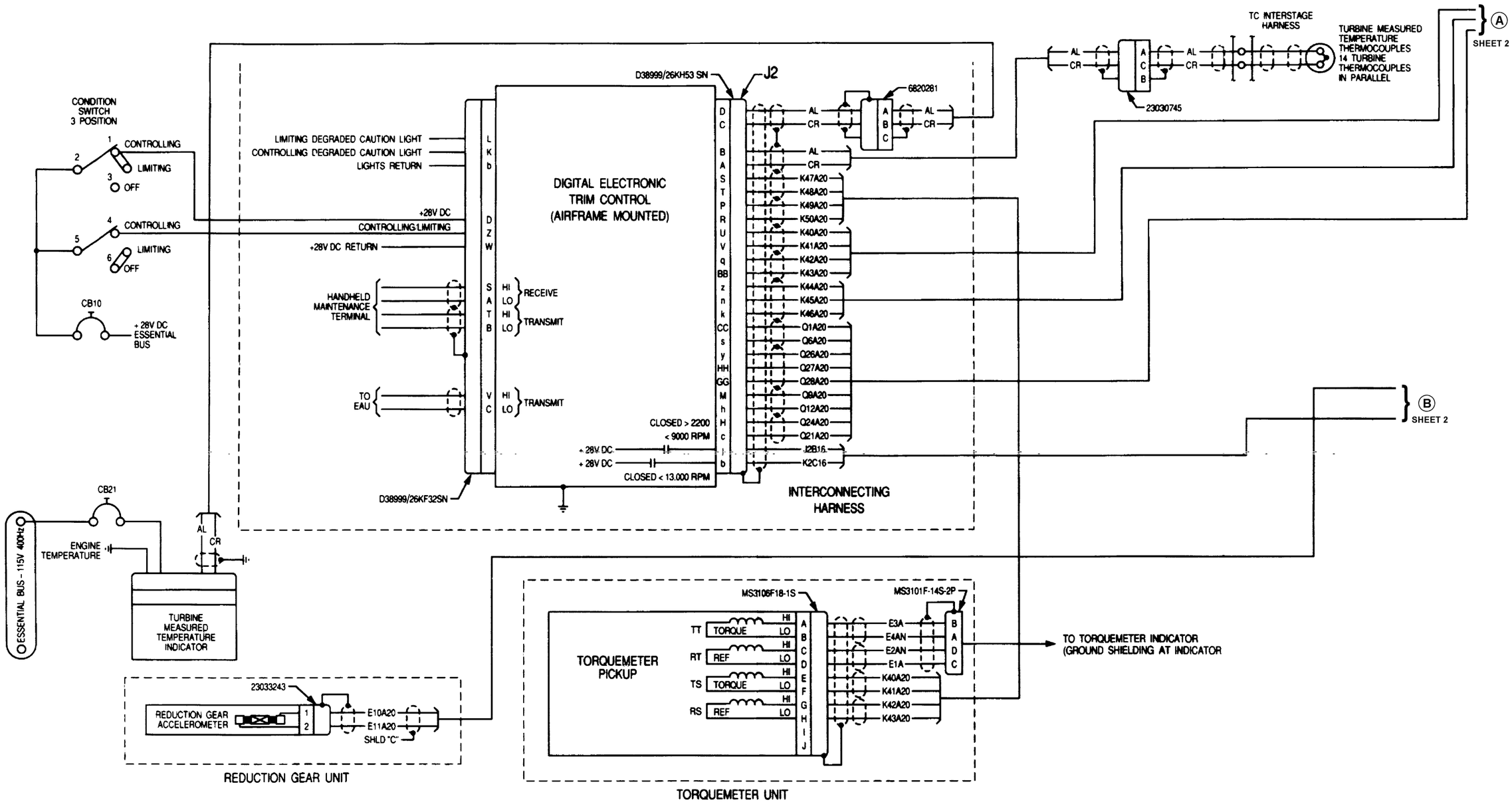

Figure 52. Electrical System (Sheet 1 of 2)

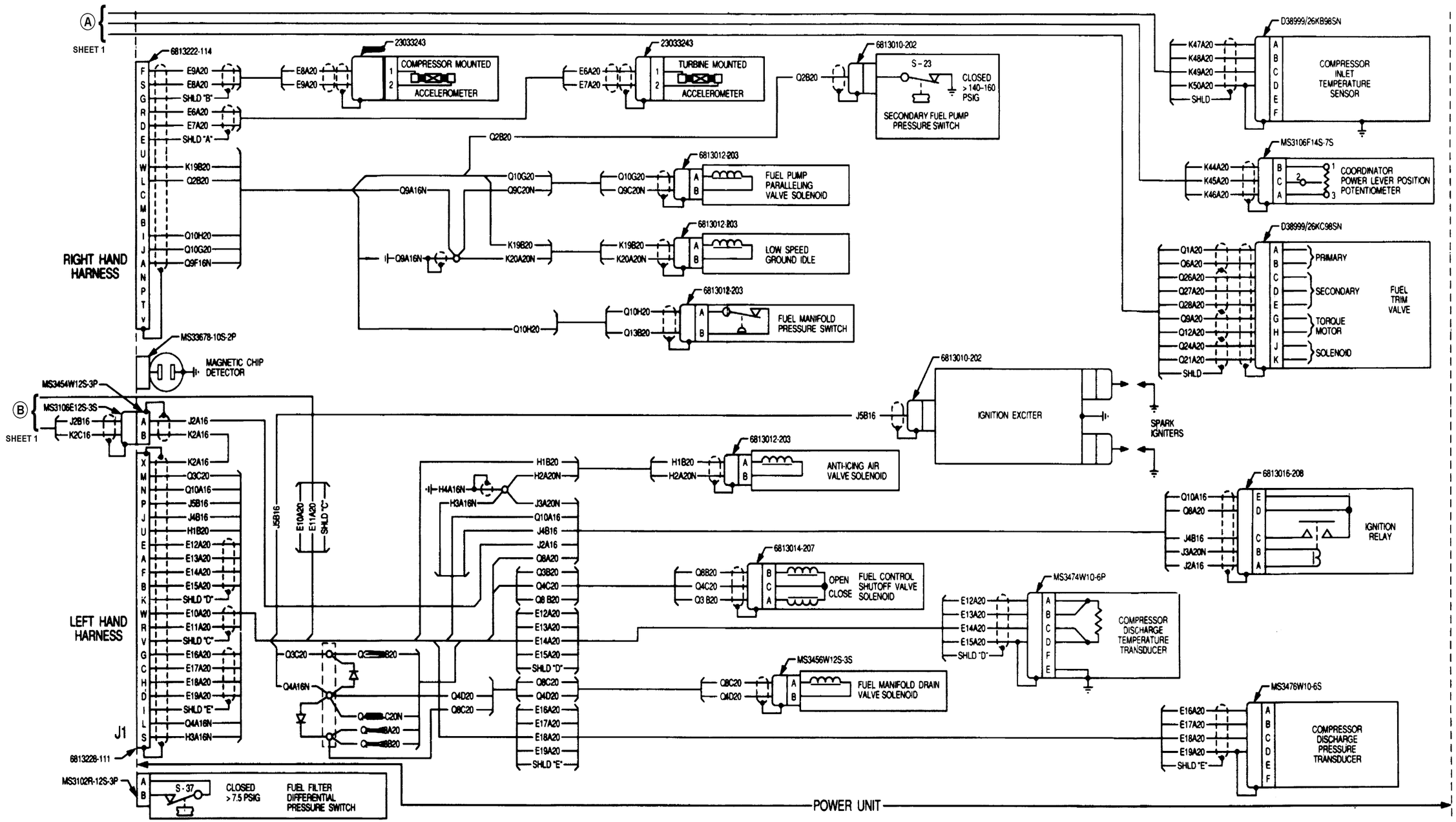

Figure 52. Electrical System (Sheet 2 of 2)

INTERMEDIATE MAINTENANCE

MAINTENANCE

TORQUEMETER ANTI–ICING COWL ASSEMBLY

Reference Material

None

Alphabetical Index

Subject	Page No.
Cleaning	2
Inspection	2
Cowl Assembly Installation	5
Cowl Assembly Removal	2
Reducer Union	6
Repair	2

Record of Applicable Technical Directives

None

1. **COWL ASSEMBLY REMOVAL.**

a. Disconnect air inlet housing–to–torquemeter anti–icing cowl hose at reducer union (10, figure 1).

b. Loosen camloc fasteners and remove cowl dome (6).

c. Remove quick–release clamp (5) from aft end, and saddle latch clamp (2) from forward end of cowl assembly (4 and 12).

d. Support cowl duct and cover assembly. Remove hinge pins (7 and 8) from rear. Remove assembly and rubber ring (3) from torquemeter housing.

e. Remove cowl cover (4) and anti–icer cowl duct (12) from torquemeter assembly (1).

2. **CLEANING.**

Materials Required

Specification No./Part No.	Nomenclature
MIL-PRF-680, Type II	Solvent, dry cleaning
MIL–A–46106	Silcone Rubber

Dry Cleaning Solvent
MIL–PRF–680, Type II **3**

a. Wipe cowl assembly clean with a cloth dampened in MIL–PRF–680, Type II dry cleaning solvent.

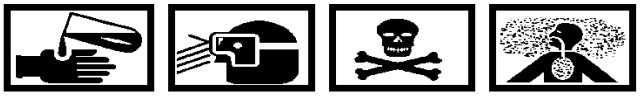

Adhesive Sealant Silicone RTV, MIL–A–46106 **31**

b. Remove the silicone rubber MIL–A–46106 from duct assembly and cover recesses.

Be sure sharp edges have been removed from probe to prevent cutting or scratching of part.

(1) Cleaning processes will partially soften and loosen the silastic, permitting removal with a pointed probe.

3. **INSPECTION.**

a. Dents may be straightened if tearing or cracking is not a likely result.

b. Deformed air passages are acceptable if restriction does not exceed 50 percent from original contour.

c. Condemn shroud brackets when cracked, excessively deformed or worn.

d. Localized wear may be weld–repaired. Refer to REPAIR paragraph, this WP.

4. **REPAIR.**

Materials Required

Specification No./Part No.	Nomenclature
AMS 4190	Welding rod (aluminum)
MIL–C–5541	Corrosion preventive
MS20426–AD4–5	Rivet, soild (AR)

a. Smooth–blend minor damage (scratches, small tears or kinks).

Chemical Conversion Coating
MIL–C–5541 **29**

b. Apply MIL–C–5541 corrosion preventive to repaired area.

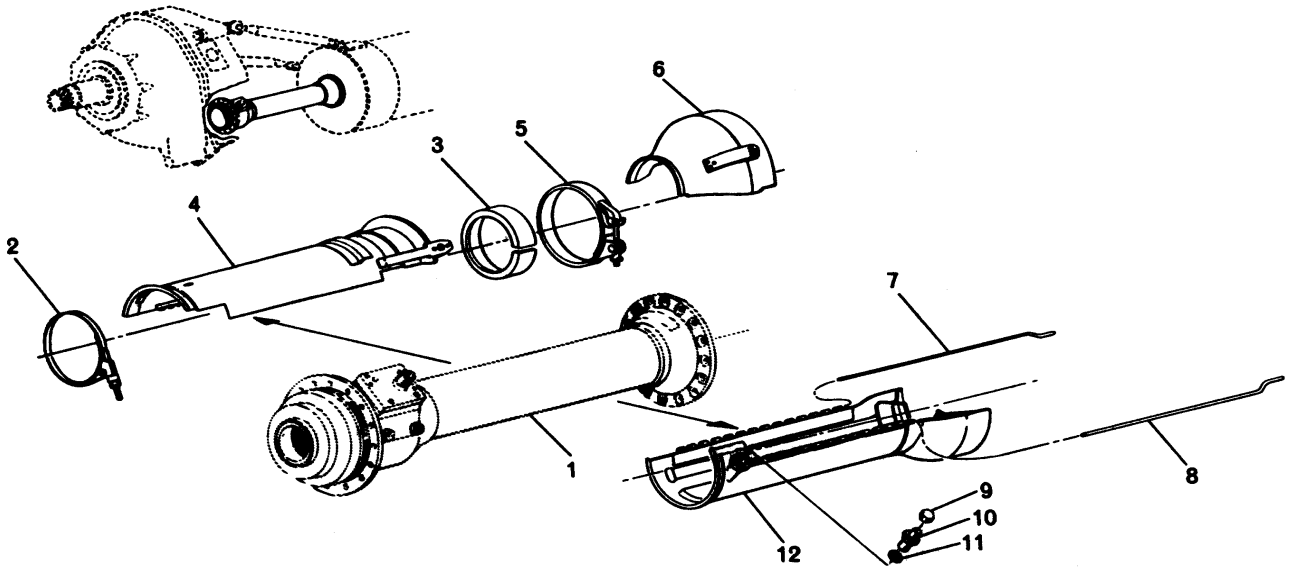

1. Torquemeter Assembly (ref)
2. Saddle Latch Clamp
3. Rubber Ring
4. Anti-icer Cowl Cover
5. Flat Band Quick Release Clamp
6. Anti-icer Cowl Dome
7. Right Cowl Hinge Pin (17.0 in.)
8. Left Cowl Hinge Pin (15.5 in.)
9. Protective Cap
10. Reducer Union
11. Preformed Packing
12. Anti-icer Cowl Duct

Figure 1. Torquemeter Housing Anti-icing Cowl Assembly.

c. Build-up localized worn areas using GTAW-MA welding method and AMS 4190 aluminum rod. Finish weld build-up to a smooth surface equal to adjacent area surface texture.

Chemical Conversion Coating
MIL-C-5541 **29**

d. Apply MIL-C-5541 corrosion preventive to repaired areas.

e. Replace hinge (7 or 8, figure 1) when any two pin hole diameters exceed 0.125 inch as follows:

(1) Qualify the plane of Line 2 (figure 2) by making three location cuts. Cuts are to be the width of slot and made near ends of worn hinges and at center across the 0.050 inch thick leg. Use a piece of hinge loop with flattened 0.050 inch thick leg as a template to check fit at qualification cuts.

(2) Cut off old hinge loops along Line 1, flush with bottom of slots.

(3) Flatten inside surface of the 0.050 inch thick leg of old hinge by stock removal along its length in plane of Line 2. Match previously made qualification cuts in preparing flattening surface. Remove burrs and sharp edges along top side of old hinge where loops were removed.

(4) Clamp replacement hinge on flattened surface of old hinge. Position new hinge to match old hinge at loop end and bottom side as closely as possible.

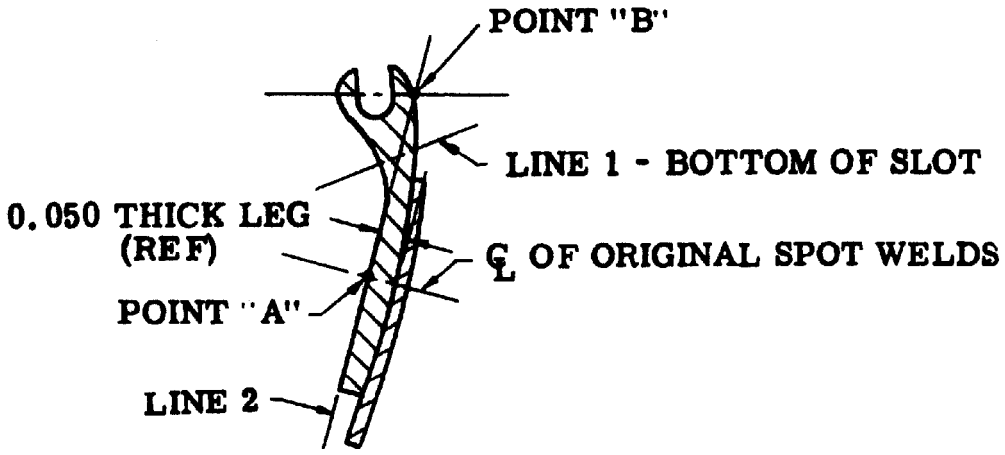

Section Through Worn Hinge

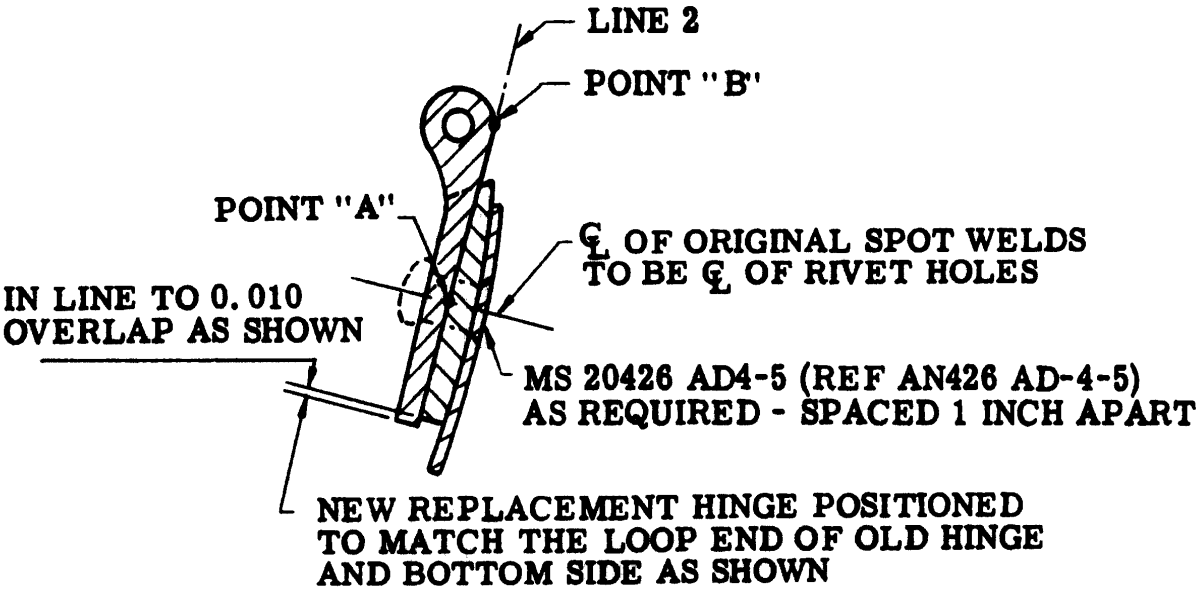

Section Through Replaced Hinge

Figure 2. Hinge Replacement on Torquemeter Anti-icing Cowl Duct Assembly

NOTE

Prior to drilling rivet holes, the mating part may be placed in position and hinge pins inserted as a check of fit between cover and duct assemblies.

(5) Drill 0.130 to 0.135 inch diameter through holes; countersink 0.221 to 0.226 inch diameter by 100 degrees at OD of duct. Center first hole on loop at loop end of hinge and space holes approximately one inch apart (approximately center of each loop.)

Chemical Conversion Coating MIL–C–5541 29

(6) Remove clamps and remove burrs from rivet holes. Apply MIL–C–5541 to reworked areas.

(7) Install rivets as required.

f. Replace damaged or worn camloc stud (fastener) and grommet assemblies.

5. **COWL ASSEMBLY INSTALLATION.**

Support Equipment Required

Part No./Type Designation	Nomenclature
–––	Wrench, torque (0–50 lb in.)

Materials Required

Specification No./Part No.	Nomenclature
303–10	Tape, fluorolin
MIL–A–46106	Compound, silicone rubber

a. Apply Fluorolin 303 tape to forward end of torquemeter housing. Apply sufficient tape to ensure snug fit and to prevent metal to metal contact. (QA).

b. Install rubber ring (3, figure 1) on aft end of torquemeter housing. Install ring with large ID toward aft end of housing and lip against offset in housing OD. (QA).

Use extreme care when installing cowl duct and cover to ensure that rubber ring remains in place.

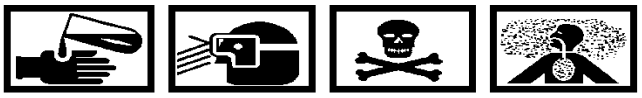

Adhesive Sealant Silicone RTV, MIL–A–46106 31

c. Apply a bead of MIL–A–46106 silicone rubber compound along engagement grooves, working compound into approximately one–half groove depth. Remove excess compound from outside surfaces.

d. Place anti–icer cowl duct (12) and cowl cover (4) in position, with the splitline horizontal, and install hinge pins (7 and 8) from rear. Install longer pin on right–hand side.

e. Install saddle latch clamp (2) on forward end of cowl duct and cover assembly. Install clamp with clamp bolt at top right position and approximately parallel to torquemeter horizontal center line. (See figure 3) Torque self–locking nut 10–15 lb in. (QA).

f. Install quick–release clamp (5, figure 1) on aft end of cowl duct and cover assembly. Install clamp with clamp bolt pointing to left and approximately parallel to torquemeter horizontal center line. Torque self–locking nut 10–15 lb in. (QA).

g. Apply silicone rubber compound along engagement grooves as instructed in step c; then, install cowl dome (6) and secure camloc fasteners.

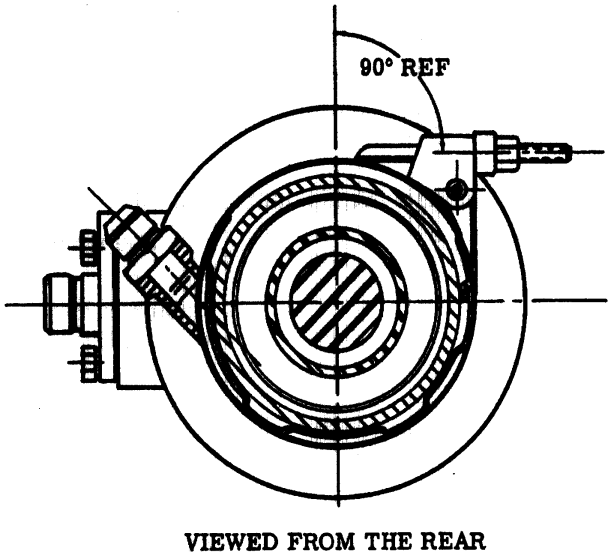

Figure 3. Saddle Clamp Positioning on Anti–icing Cowl Duct and Cover

6. **REDUCER UNION INSTALLATION.**

Support Equipment Required

Part No./Type Designation	Nomenclature
–––	Wrench, torque (0–300 lb in.)

Materials Required

Specification No./Part No.	Nomenclature
AS3208–06	Packing, Preformed (1)
MIL–PRF–23699	Oil, Lubricating

Lubricating Oil, MIL–PRF–23699 **2**

a. Using MIL–PRF–23699 lubricating oil, lubricate packing (11, figure 1) and install on union (10).

b. Using MIL–PRF–23699 lubricating oil, lubricate union threads and install into port. Torque union 100–150 lb in. (QA).

c. Install protective cap (9) fingertight.

INTERMEDIATE MAINTENANCE

REMOVAL AND INSTALLATION

REDUCTION GEAR UNIT ASSEMBLY WITH SAFETY COUPLING ASSEMBLY AND TORQUEMETER UNIT

Reference Material

Torquemeter Anti–icing Cowl Assembly–Maintenance . . . . . WP 026 00
Torquemeter Unit and Safety Coupling Assembly–Removal and Installation . . . . . WP 028 00
Reduction Gear Unit Assembly–Assembly . . . . . WP 040 00
Low Pressure Fuel Filters and Assembly–Maintenance . . . . . WP 061 00
Reduction Gear Prop Feather Solenoid–Maintenance . . . . . WP 079 00
Quick Engine Change Manual A1–E2C2A–QEC–000
Quick Engine Change Manual, Intermediate Maintenance Manual with Illustrated Parts Breakdown A1–E2C2A–QEC–010
External Tubing, Cabling and Clamping Supplement Manual . . . . . NAVAIR 02B–5DG–6–1–1

Alphabetical Index

Subject Page No.
Installation 6
Introduction 2
Propeller Control Linkage Adjustment Procedures (Hamilton Standard 54460 Propeller) 12
Propeller Control Linkage Installation 11
Removal 2

Record of Applicable Technical Directives

None

1. **INTRODUCTION.**

a. This WP provides instructions for removal and installation of the reduction gear unit. Propeller control linkage adjustments are also covered.

b. If engine is received with QEC equipment installed, refer to A1–E2C2A–QEC–000 and A1–E2C2A–QEC–010 for removal.

2. **REMOVAL.**

Support Equipment Required

Part No./Type Designation	Nomenclature
2308	Puller, Tee Handle 1/4–28 Thread
6795905	Stand, turnover, engine component
6796300	Cover, propeller shaft
6796301	Support, torquemeter spline
6796820	Adapter, attaching reduction gear to 6799764 adapter
6796832	Stand, reduction gear transportation and storage
6796980	Adapter, rotating, engine components to parallel rail maintenance stand
6797682	Adapter, lifting, reduction gear
6798160	Adapter, lifting, reduction gear
6799764	Adapter, attaching, engine component adapter
TD–5–500	Tensiometer

a. Remove hose assembly and clamps from two low pressure fuel filter assemblies on right side of engine. Refer to NAVAIR 02B–5DG–6–1–1.

b. Remove clamps and detach fuel filter assemblies from mounting brackets. (Refer to WP 061 00)

c. Remove upper filter bracket support clamp assembly from tie strut (1). (See figure 3.)

d. Remove low pressure fuel filter upper mounting bracket (2) from compressor air inlet housing strut fitting.

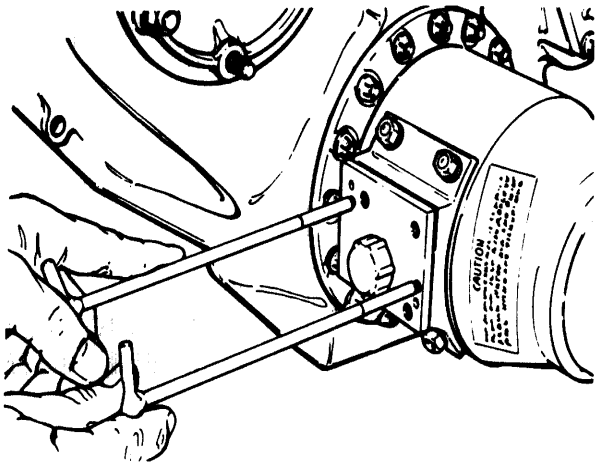

Figure 1. 2308 Torquemeter Pickup Puller

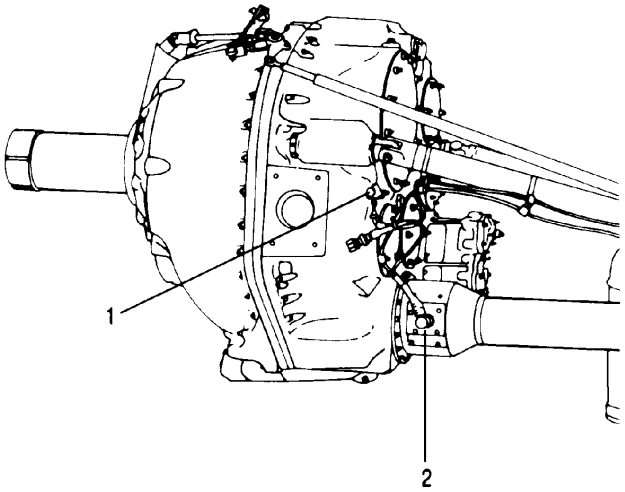

1. Reduction Gear Unit Accelerometer
2. Torquemeter Pickup

Figure 2. Torquemeter Pickup and Reduction Gear Accelerometer

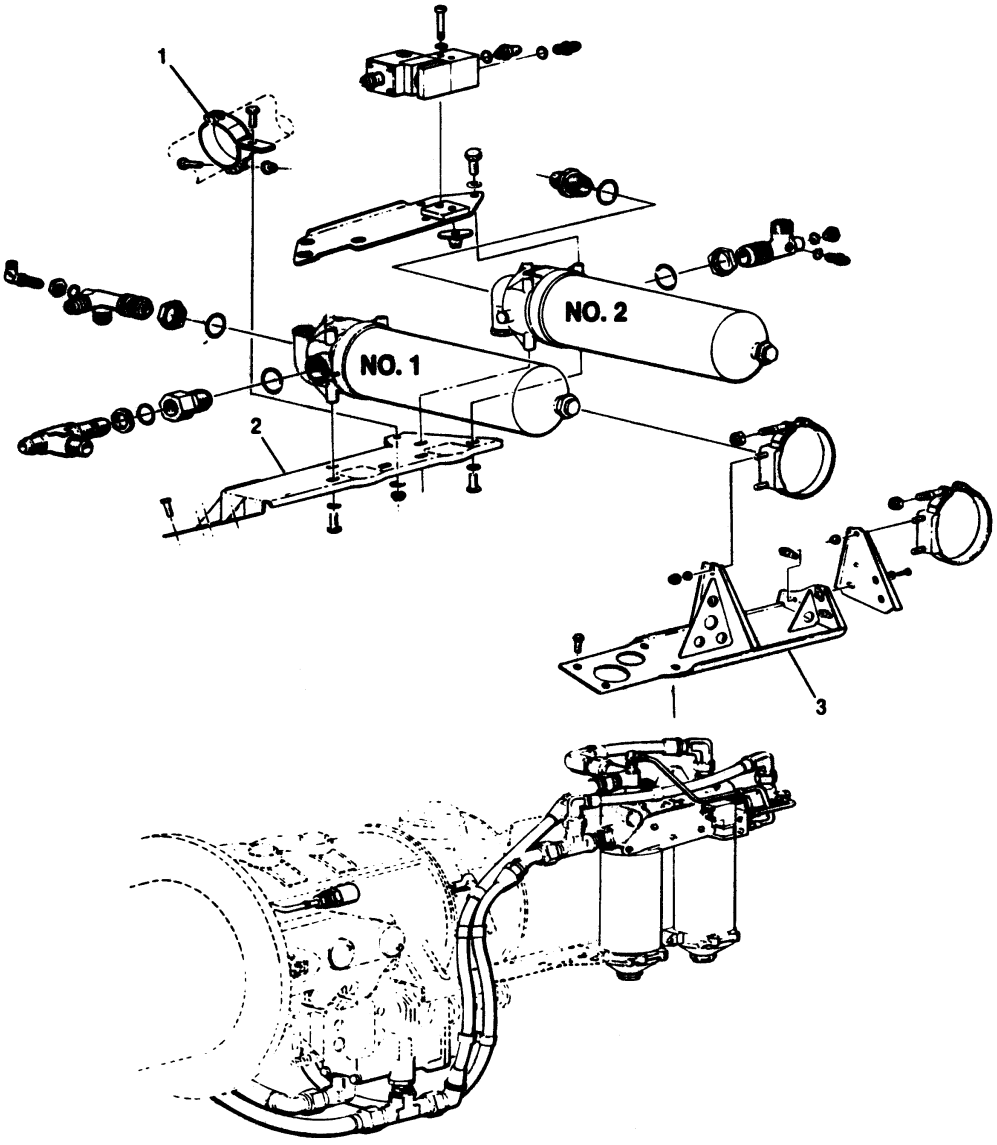

RIGHT SIDE VIEW

1. Upper filter bracket support clamp
2. Upper mounting bracket
3. Lower mounting bracket

Figure 3. Low Pressure Fuel Filters Details

e. Remove low pressure fuel filter lower mounting bracket (3) from compressor air inlet housing strut pad.

f. Remove wire clamps from plastic ties, three each.

g. Remove lockwire and disconnect electrical connector at torquemeter pickup and connector at reduction gear accelerometer (See figure 2.)

CAUTION

The torquemeter pickup must be removed from the torquemeter housing during removal or installation of the torquemeter assembly. The pickup or exciter may be damaged while the torquemeter housing is being placed over the torquemeter shaft.

h. Remove bolts and washers from torquemeter pickup and shims from torquemeter housing using 2308 tee handle puller (figure 1). Do not discard shims.

i. Remove lockwire, electrical connection and accelerometer. (See figure 3.)

j. Attach tensiometer TD–5–500 to an overhead hoist.

k. Attach 6798160 (6797682 alternate) reduction gear lifting adapter to reduction gear assembly.

l. Attach lifting adapter to an overhead hoist and tensiometer. (See figure 4.)

m. Install 6796300 propeller shaft cover (shipping cover) over propeller shaft threads and splines. (See figure 5.)

n. Detach propeller control intermediate link rod assembly at power section and gearbox.

o. Remove prop feather solenoid.

p. Remove cotter pin (7, figure 4) and loosen reduction gear eyebolt pin nuts (6) after making sure sufficient tension is on hoist to hold weight of the reduction gear unit.

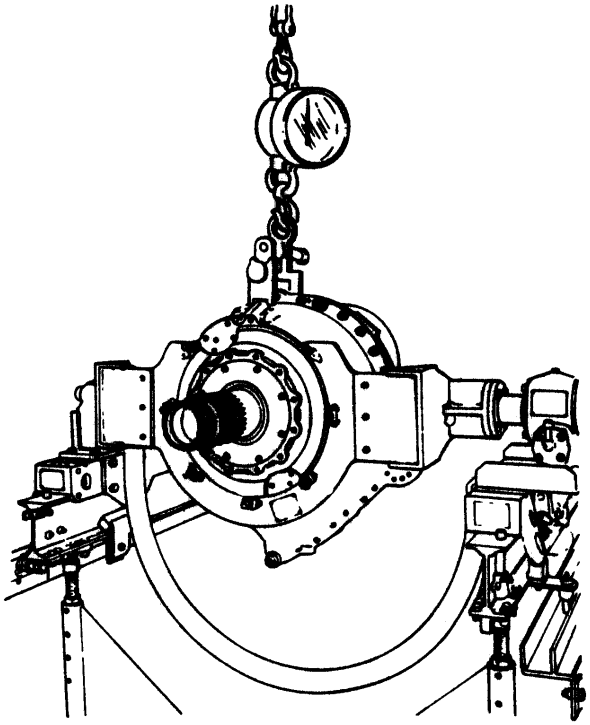

1. 6796820 Attaching Adapter
2. 6798160 Lifting Adapter
3. 6799764 Attaching Adapter
4. 6796980 Rotating Adapter
5. TD–5–500 Tensiometer

Figure 4. Reduction Gear Mounted in Adapters

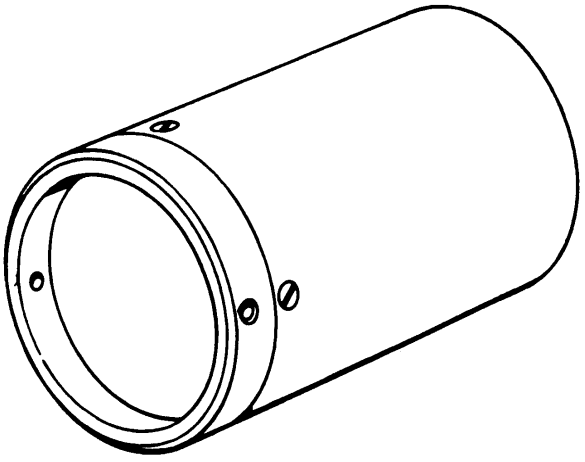

Figure 5. 6796300 Propeller Shaft Cover

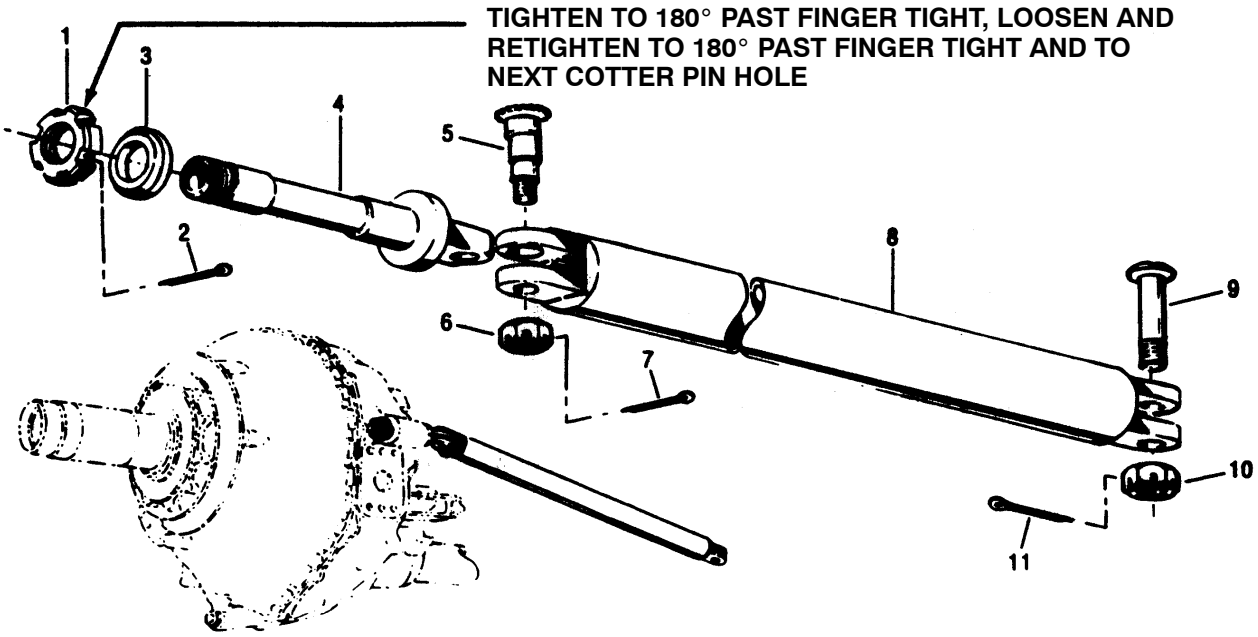

1. Spanner Nut
2. Cotter Pin
3. Beveled Washer
4. Reduction Gear Eyebolt
5. Reduction Gear Eyebolt Pin
6. Castle Nut
7. Cotter Pin
8. Reduction Gear–to–Power Section Strut
9. Clevis Bolt
10. Shear Nut
11. Cotter Pin

Figure 6. Reduction Gear–to–Power Section Strut Details

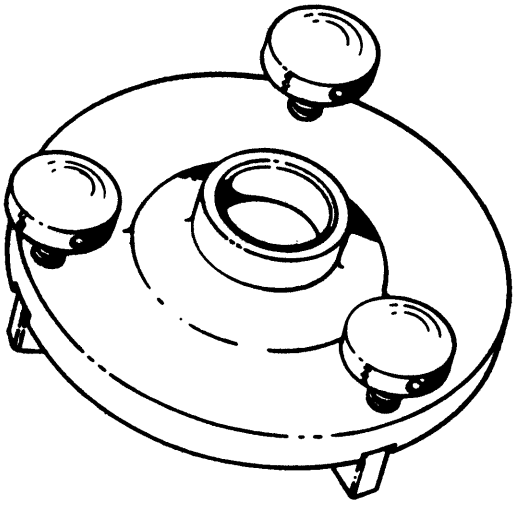

Figure 7. 6796301 Torquemeter Spline Support

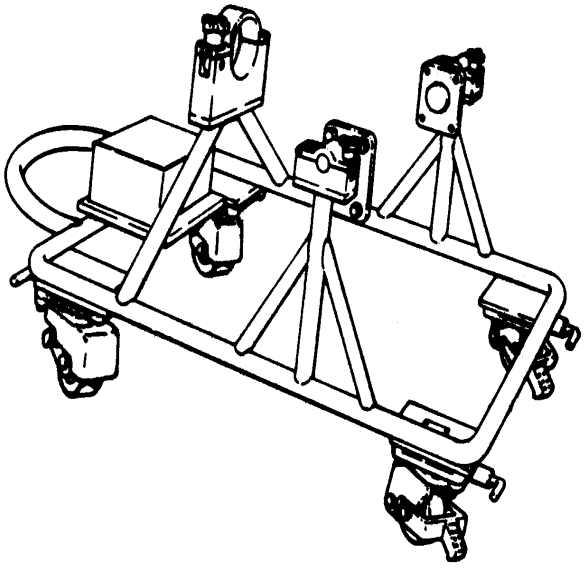

Figure 8. 6796832 Reduction Gear Transportation and Storage Stand

q. Remove cotter pin (11), shear nut (10), and clevis bolt (9) that secure reduction gear–to–power section struts (8) to air inlet housing fittings.

r. Separate struts from fittings.

s. Leave strut assemblies attached to reduction gear.

t. Remove torquemeter anti–ice cowling. (Refer to WP 029 00.)

u. Remove nuts securing torquemeter housing to air inlet housing.

v. Remove shroud brackets from studs if installed. (Leave the torquemeter housing attached to the reduction gear unit).

CAUTION

Maintain alignment between torquemeter and power section to avoid damage to splined surfaces. Do not move reduction gear back and forth in a sideways direction or up and down when pulling.

w. Slowly disengage reduction gear unit and torquemeter assembly from compressor air inlet housing.

x. Install 6796301 torquemeter spline support over splines (See figure 7.)

y. Install 6796820 adapter and 6799764 engine component attaching adapter to reduction gear unit. (See figure 4.)

NOTE

To install reduction gear on 6796832 transportation and storage stand (figure 8), attach two trunnion adapters (parts of stand) to engine mounting pads and lower reduction gear on to stand.

z. Install reduction gear unit to 6795905 (figure 9) engine component turnover stand or, if applicable, in 6796980 rotating adapter on parallel rail maintenance stand. (See figure 4.) Remove hoist, tensiometer and lifting adapter.

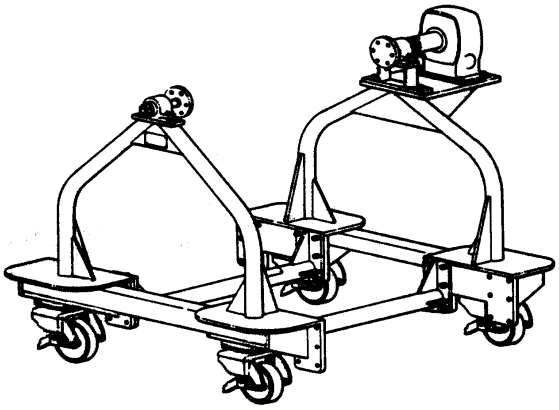

Figure 9. 6795905 Engine Component Turnover Stand

3. **INSTALLATION.**

Support Equipment Required

Part No./Type Designation	Nomenclature
TD–5–500	Tensiometer
23032994	Adapter, lifting, power section
23032996	Bracket, lifting, turbine unit
6796059	Wrench, reduction gear eyebolt nut
6796079	Wrench, reduction gear eyebolt pin
6796618	Holder, bolt, reduction gear–power section strut assembly
6796784	Stand, Engine Overhaul
6796859	Adapter, attaching, power section
6797571	Gage, depth, torquemeter pick-up mounting pad to reference teeth diameter
6797682	Adapter, lifting, reduction gear
6798160	Adapter, lifting, reduction gear
6799765	Fixture, alignment, reduction gear eyebolt
–––	Wrench, torque (0–150 lb in.)
–––	Wrench, torque (0–300 lb in.)
–––	Wrench, torque (0–500 lb in.)
–––	Wrench, torque (0–1000 lb in.)
–––	Gage, feeler

Materials Required

Specification No./Part No.	Nomenclature
AN381–3–10	Pin, cotter (2)
AS3209–130	Packing, preformed
AS3209–224	Seal, O–ring
AS3209–252	Packing, preformed
MIL–PRF–23699	Oil, lubricating
MS20995C20	Lockwire, 0.020 inch
MS20995C32	Lockwire, 0.032 inch
MS24665	Pin, cotter (2)
MS24665–300	Pin, cotter (2)
6791532	Shim
6862609	Tie, plastic, electrical wire
NS165	Compound, Anti–seize

a. Install torquemeter and safety coupling assembly to reduction gear unit. (Refer to WP 028 00.)

b. Install reduction gear eyebolts (4, figure 6), beveled washers (3), and spanner nuts (1).

c. Check eyebolts for seating in rear housing with a 0.001 inch feeler gage. (QA)

NOTE

Eyebolt positioning is not normally required except after replacement of damaged parts.

d. Install 6799765 reduction gear assembly eyebolt alignment fixture (figure 11) on eyebolts with marking “TOP FOR PINION LOW” toward top of reduction gear.

e. Tighten eyebolt spanner nuts (1, figure 6) to 180° past finger tight, loosen and retighten 180° past finger tight and to the next cotter pin hole, using 6796059 reduction gear eyebolt nut wrench. (See figure 10.)

f. Check with a 0.001 in. feeler gage to ensure bolt is properly seated. (QA)

g. Remove alignment fixture.

h. Install cotter pin (2, figure 6). (QA)

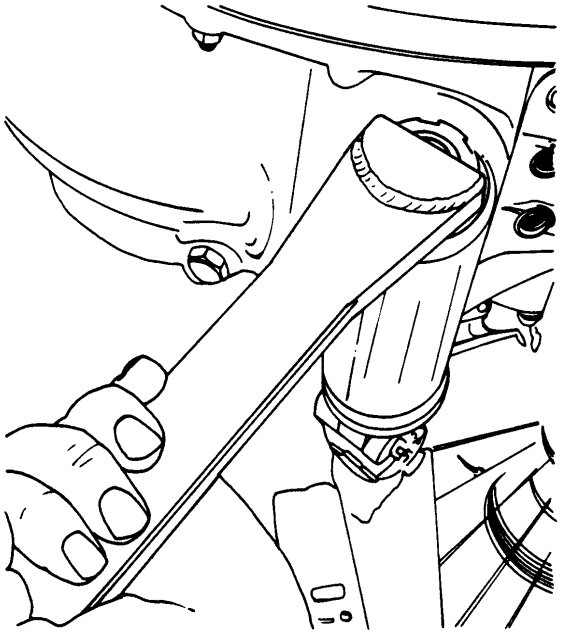

Figure 10. 6796059 Reduction Gear Eyebolt Nut Wrench

i. Attach 6798160 (6797682 alternate) reduction gear lifting adapter to reduction gear assembly.

j. With power section installed in 6796784 engine overhaul stand, install 23032994 lifting adapter to power section with 23032996 lifting bracket and 6796859 attaching adapter.

k. Attach TD–5–500 tensiometer to overhead hoist.

l. Attach lifting bracket to tensiometer.

m. Remove 6796301 spline support.

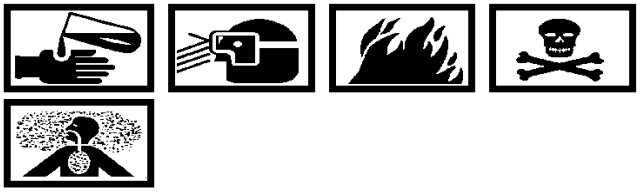

Lubricating Oil, MIL–PRF–23699 2

n. Apply a light coat of MIL–PRF–23699 engine oil to O–ring seals and mating diameters and install AS3209–224 O–ring seal on power section end of torquemeter shaft and AS3209–252 preformed packing on aft end of torquemeter housing. Refer to WP 028 00. (QA)

o. Slowly move reduction gear toward power section and carefully engage splines of torquemeter shaft with compressor extension shaft splines.

p. Rotate power section rotor, if necessary, to aid in engaging splines.

CAUTION

Shift horizontal and vertical alignment of reduction gear as necessary, but avoid sidewise movement of reduction gear as much as possible to prevent damage to splines or O–ring seals.

q. Move reduction gear assembly toward power section to complete spline engagement, and mount torquemeter shaft housing flange on power section studs, centering torquemeter housing oversize holes on studs. (Torquemeter housing–to–air inlet housing fit shall be 0.001T–0.006L.) (QA)

r. Inspect all openings in torquemeter shaft assembly for foreign objects before final assembly. (QA)

s. Inspect all lines for shipping plugs and caps before attaching to accessories. (QA)

NOTE

If 6843147 torquemeter anti–icing cushion–mounted cowl assembly is used, omit step t. Refer to WP 026 00.

t. Install two anti–icer shroud brackets on third and fourth studs to right and left, counting stud at twelve o'clock position as number one. Refer to WP 026 00.

Anti–seize Compound (Never Seez) NS165 32

u. Apply NS165 lubricant to stud threads and install torquemeter housing–to–air inlet housing self–locking nuts (Do not tighten nuts at this time).

v. Apply a light coat of NS165 lubricant to eyebolt pins (5, figure 6) and attach struts (8) to reduction gear.

Figure 11. 6799765 Reduction Gear Assembly Eyebolt Alignment Fixture

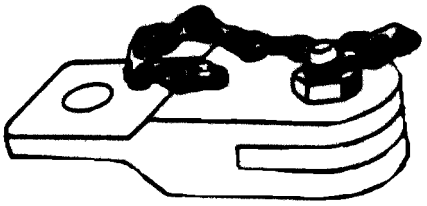

Figure 12. 6796859 Power Section Attaching Adapter

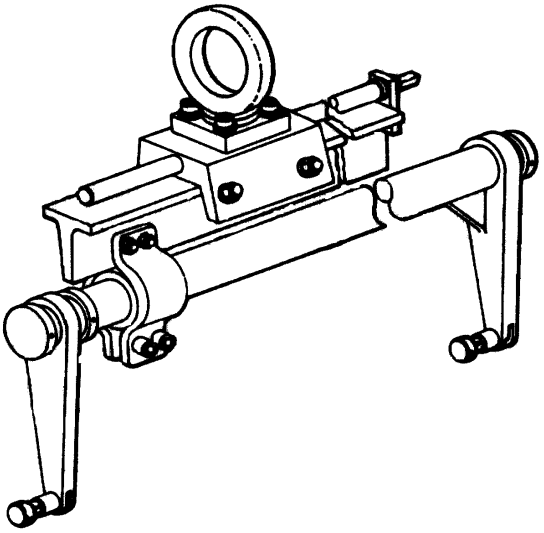

Figure 13. 23032994 Power Section Lifting Adapter

CAUTION

Do not reposition eyebolts to facilitate strut installation. Do not force engagement of struts or clevis bolts.

w. Install struts with locking serration up and eyebolt pins with heads up (Do not engage serrations).

NOTE

If strut does not engage freely, loosen torquemeter housing to power section and/or torquemeter housing to reduction gear retaining nuts and rotate reduction gear with respect to power section as necessary to permit satisfactory strut engagement.

x. Swing struts into position with power section fittings. Torque torquemeter housing nuts to 140–170 lb in. (QA)

y. Align clevis bolt holes at the power section fitting by rotating the eccentric eyebolt pin (5, figure 6) using 6796079 reduction gear eyebolt pin wrench. (See figure 15.)

NOTE

Clevis bolt must rotate freely in strut and fitting holes. If bolt is tight, readjust eyebolt pin.

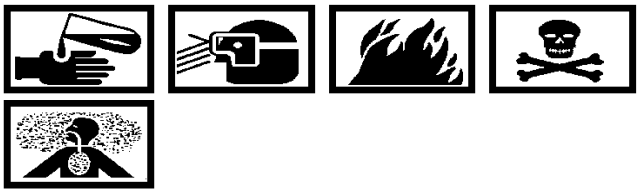

Anti–seize Compound (Never Seez) NS165 32

z. Apply a light coat of NS165 lubricant to clevis bolts (9, figure 6) and install bolts with heads up.

aa. Lock eyebolt pin by engaging serrations.

ab. Install eyebolt pin nuts (6) and torque to 180–300 lb in. (QA)

ac. Secure nuts with cotter pin (7). (QA)

ad. Recheck clevis bolts for freedom of rotation.

ae. Install clevis bolt nuts (10) and using 6796618 reduction gear power section strut assembly bolt holder, (figure 16) prevent bolt from turning. Torque nuts to 420–600 lb in. (QA)

af. Secure nuts with cotter pin (11, figure 6). (QA)

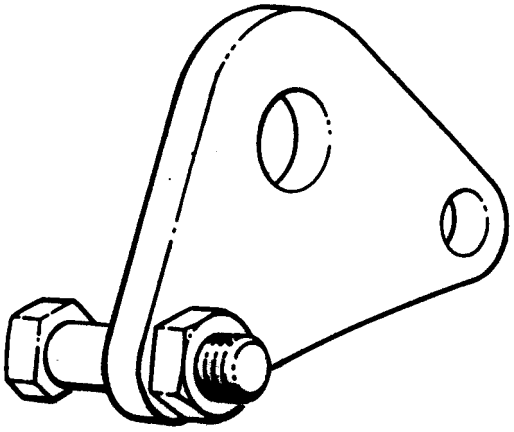

Figure 14. 23032996 Turbine Unit and Power Section Lifting Adapter

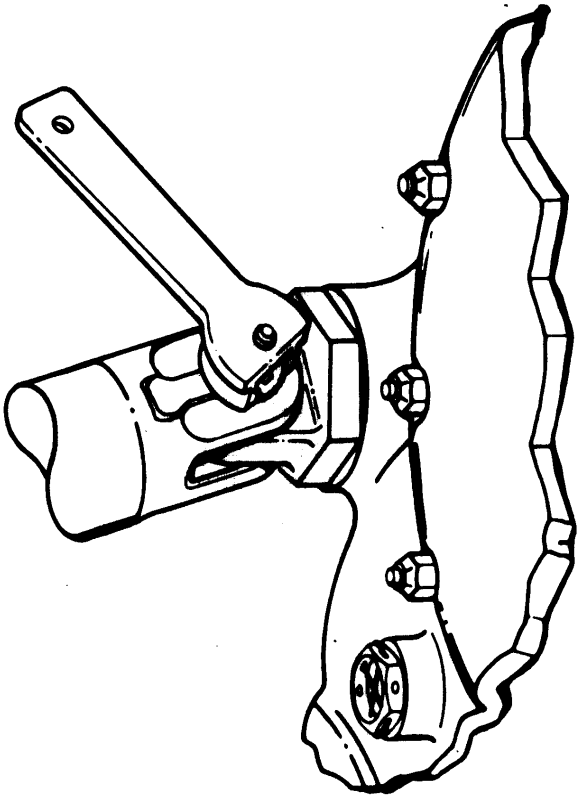

Figure 15. 6796079 Reduction Gear Eyebolt Pin Wrench

ag. Secure upper fuel filter mounting bracket to filter bracket support clamp (on reduction gear–power section strut) with bolt, washer and self–locking nut.

ah. Install torquemeter pickup assembly.

ai. Insert 6797571 depth gage in housing and align hole in knurled flange head with dowel pin on housing pad. (See figure 17.) (QA)

aj. Hold depth gage firmly against torquemeter reference teeth. (QA)

ak. Measure gap between gage head inner flange surface and mounting pad with a feeler gage. (See figure 17.) This measurement determines shim space dimension. (QA)

al. Refer to table 1 to determine number of 0.004–0.006 in. shims required to insert under pickup mounting flange to obtain a 0.035–0.041 in. air gap.

Table 1. Torquemeter Pickup Shim Requirement

Feeler Gage Width (in.)	No. Shims Required
0.006 –0.009	1
0.010– 0.014	2
0.015 –0.020	3
0.021 –0.024	4
0.025 –0.030	5
0.031 –0.038	6

NOTE

If no shims or more than six shims are required, repeat gap measurement. After repeating gap measurement and no shims or more than six shims are required, replace the torquemeter assembly.

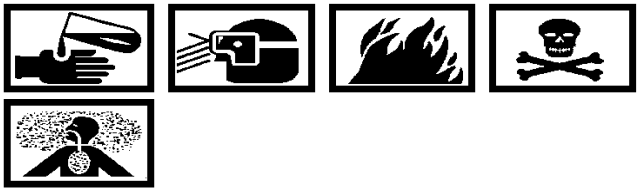

Anti–seize Compound (Never Seez) NS165 32

am. Install AS3209–130 preformed packing and shims on pickup. Install pickup assembly in housing assembly and secure with four washers and bolts. Apply NS165 lubricant to bolt threads. Torque bolts to 70–85 lb in. and 0.032 inch lockwire. (QA)

an. Install electrical connector on torquemeter pick–up and 0.020 inch lockwire. (QA)

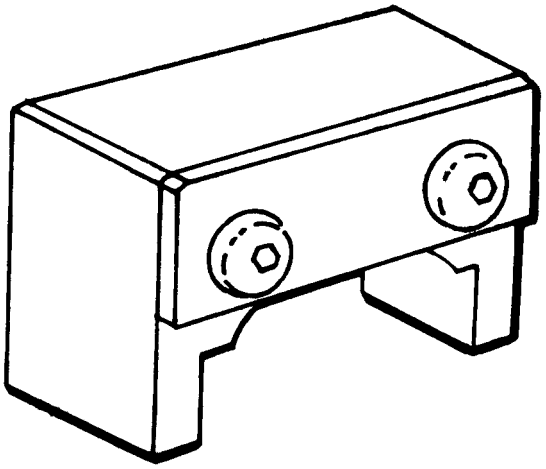

Figure 16. 6796618 Reduction Gear to Power Section Strut Assembly Bolt Holder

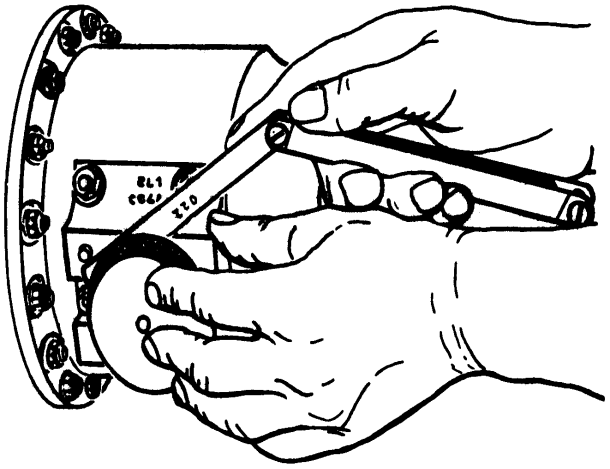

Figure 17. Measuring Shim Requirements for Torquemeter Pickup with Torquemeter Pickup Mounting Pad–to–reference teeth Diameter Depth Gage and Feeler Gage

ao. Install torquemeter anti–icing cowl assembly. Refer to WP 026 00.

NOTE

Refer NAVAIR 02B–5DG–6–1–1, for installation of any removed external tubing, cabling or clamping.

ap. Install three plastic clamps to left tie strut.

aq. Install reduction gear assembly vibration pickup on the accelerometer mounting bracket assembly, then install on the rear face of the reduction gear assembly rear housing at approximately the 9 o'clock position looking forward. (See figure 18.)

ar. Install electrical connector on accelerometer and lockwire. (QA)

as. Install electrical feather solenoid. Refer to WP 079 00.

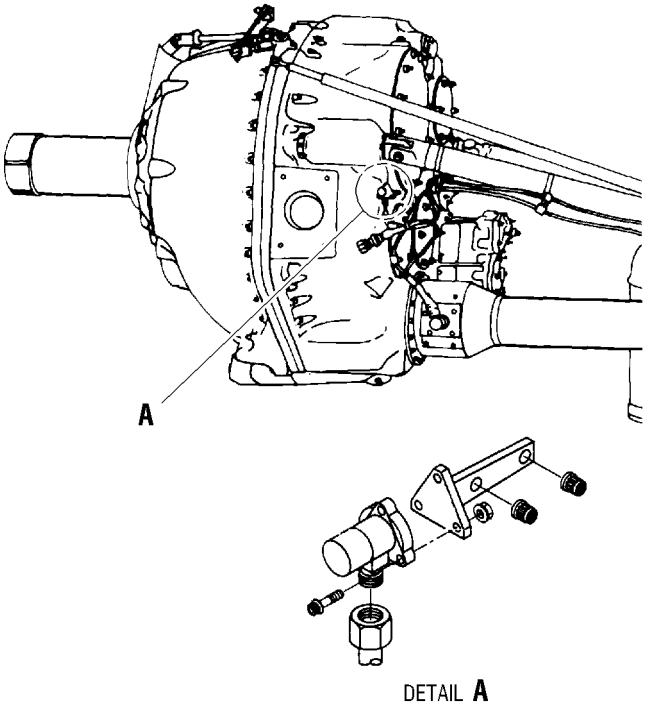

Figure 18. Installing Accelerometer on Reduction Gear Unit

4. **PROPELLER CONTROL LINKAGE INSTALLATION.**

Support Equipment Required

Part No./Type Designation	Nomenclature
–––	Wrench, torque (0–150 lb in.)

Materials Required

Specification No./Part No.	Nomenclature
NS165	Compound, Anti–seize
MS20995C32	Lockwire, 0.032 inch
VV–P–236	Petrolatum

a. Refer to figures 19 and 20 and install the controls components, linkage, and associated equipment as illustrated. (Also refer to WP 040 00.)

CAUTION

Do not wash or relubricate rod ends of the ball bearing type with bonded neoprene seals. Merely wipe clean prior to assembly.

Petrolatum Lubricant VV–P–236 33

b. Apply petrolatum, VV–P–236, to the control linkage ball joints and bearings after parts are washed.

Anti–seize Compound (Never Seez) NS165 32

c. Adjust to length linkage which is threaded on both ends and assemble with approximately equal threads on each end. Threaded linkage must be assembled with the male end inserted past the observation holes of the female parts. Apply NS165 lubricant to threads.

d. Install bolts through ends of the propeller control rear arm with heads inboard. Torque nuts 74–89 lb in. (QA)

e. Secure all linkage attaching parts after adjustments with MS20995C32 lockwire as shown in figure 21. (QA)

5. **PROPELLER CONTROL LINKAGE ADJUSTMENT PROCEDURES (HAMILTON STANDARD 54460 PROPELLER).**

Support Equipment Required

Part No./Type Designation	Nomenclature
6796568	Adapter, torque, coordinator control shaft
6796708	Fixture, propeller linkage checking
6796757	Pin, rigging, propeller control linkage
HS9903	Pin, 3 step, propeller rigging, flight idle
–––	Wrench, torque (0–150 lb in.)
–––	Wrench, torque (0–300 lb in.)

a. Use rigging plate on the propeller when the propeller is installed, and, when the propeller is not installed, use 6796708 control linkage check fixture (See figures 22 and 23.)

b. Move coordinator condition lever (on inboard side of coordinator) to full unfeather (clockwise facing inboard side of coordinator).

c. Install a 6796757 rigging pin in the propeller control rear arm rigging pin hole of the control rear arm (2, figure 20).

CAUTION

When adjusting arms, sight holes must remain blocked.

d. Adjust the control rear link assembly to obtain a reading of 34° on coordinator pointer.

e. Check length of bellcrank intermediate clevis to bellcrank.

f. Correct length between center of nut on bellcrank to center of hole in the clevis is 3.405–3.421 in. (QA)

g. Install a 6796757 rigging pin in the bellcrank rigging hole. (See figure 24.)

h. Adjust intermediate link rod ends until bolts can be inserted at propeller control rear arm and at propeller control intermediate bellcrank.

i. Make equal engagement of rod ends on propeller control rods.

j. Install rod between bellcrank intermediate clevis and propeller control front arm.

k. Install the control forward shaft in the control front arm and position the universal assembly on the forward shaft in the aft–most position.

l. Set propeller control input shaft indicator at approximately FLIGHT IDLE.

m. Move universal joint forward which installs the universal assembly on the control shaft of the rigging plate or check fixture.

CAUTION

The assembly of the universal joint must be done with the retaining bolts removed. After installing the bolts, be sure that engagement with the proper retaining groove on the control forward shaft has been made. This is so when the end of the shaft is visible in the slot on the aft portion of the universal just forward of the retaining bolt. Also, only one retaining groove will be visible outside the universal.

n. Install and tighten universal assembly clamp bolts.

o. Attempt to position the HS9903 propeller rigging pin or the pin of the check fixture in FLIGHT IDLE slot of the rigging plate or the check fixture. (See figures 22 and 23.)

p. If the pin cannot be inserted, adjust control rod as necessary.

q. Remove all rigging pins.

r. Hold the condition lever on the coordinator at unfeather and check the maximum reverse, and takeoff by setting the coordinator to these positions and inserting the HS9903 propeller rigging pin in the corresponding slots of the propeller rigging plate.

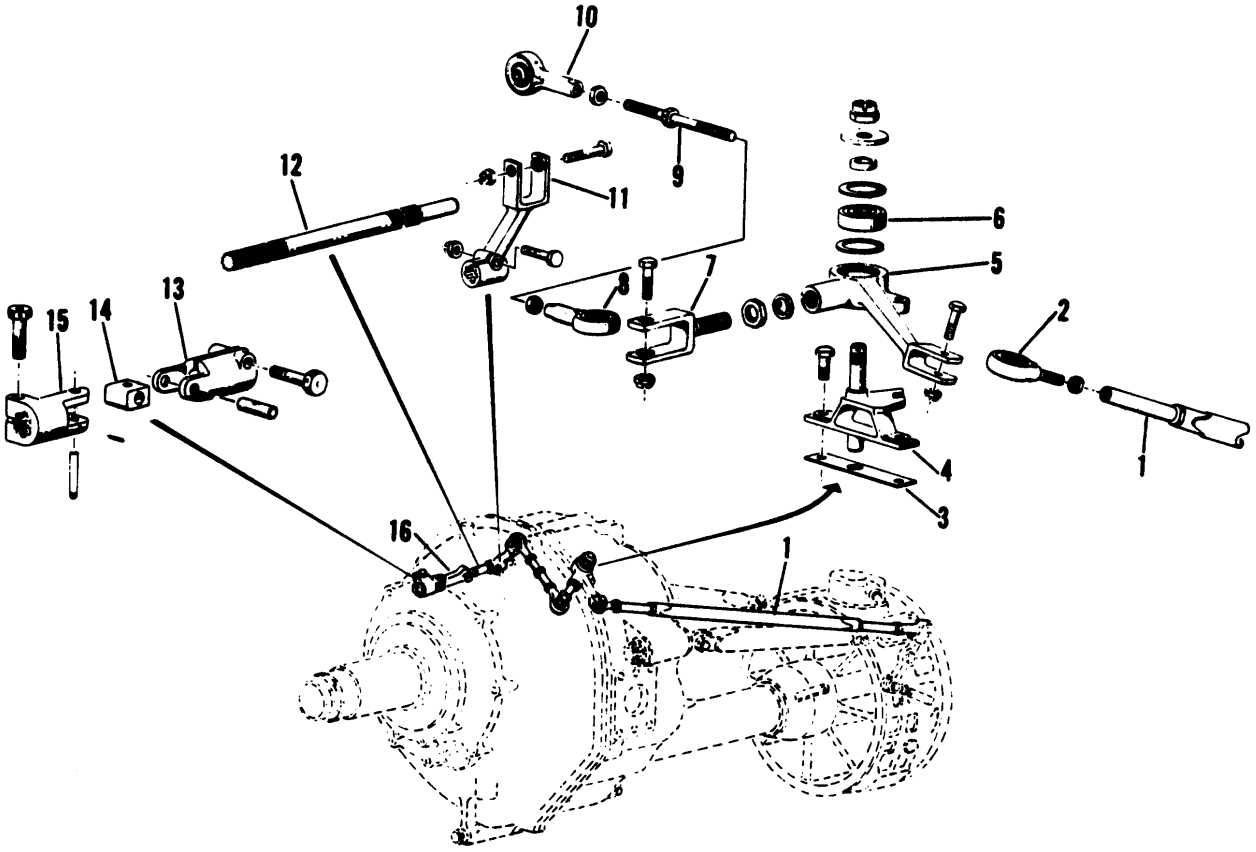

1. Propeller Control Intermediate Link Rod Assembly
2. Rod End
3. Propeller Control Shaft Gasket
4. Propeller Control Lever Intermediate Shaft
5. Propeller Control Intermediate Bellcrank
6. Ball Bearing
7. Bell Crank Propeller Control Intermediate Clevis
8. Rod End Bearing Plain
9. Control Rod
10. Internal Rod End
11. Propeller Control Front Arm
12. Propeller Control Forward Shaft
13. Universal Joint Aft Yoke
14. Universal Joint Block
15. Universal Joint Forward Yoke
16. Propeller Control Universal Joint Assembly

Figure 19. Reduction Gear Control Assembly

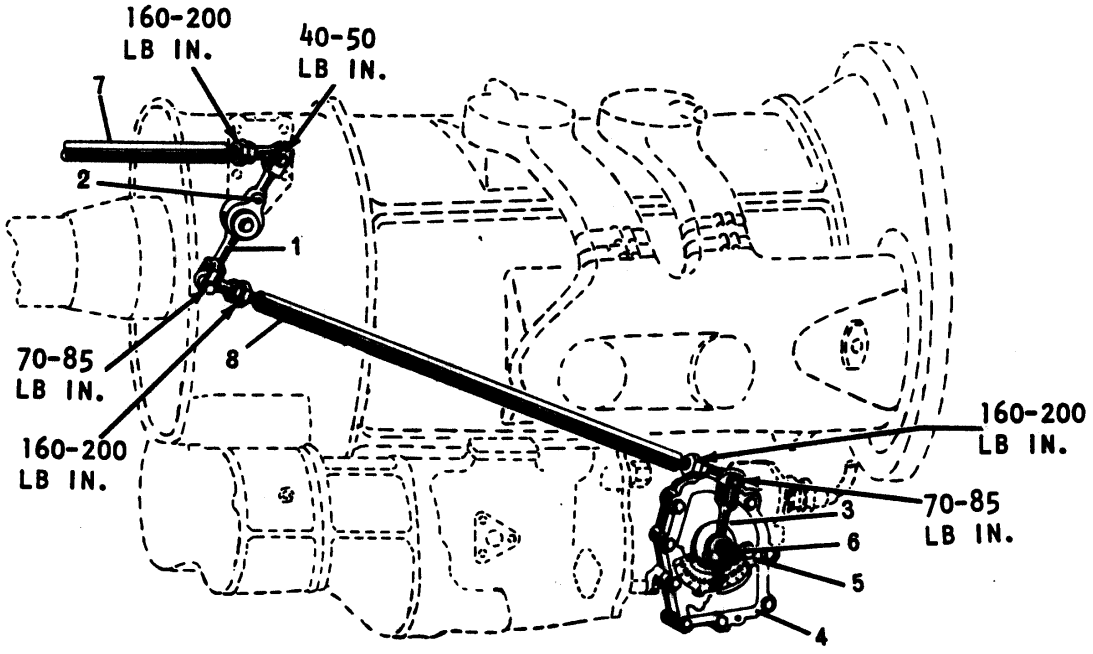

1. Propeller Control Rear Arm
2. Rigging Pin Hole
3. Coordinator Propeller Setting Lever
4. Coordinator Control
5. Coordinator Control Lock (alt)
6. Pointer
7. Intermediate Link Rod
8. Control Rear Link Assembly

Figure 20. Coordinator Control and Linkage

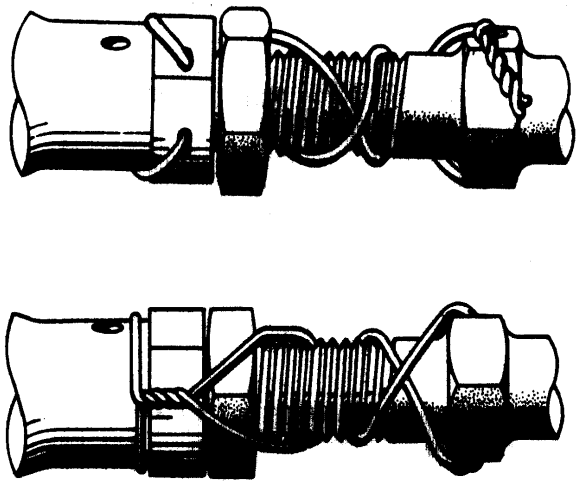

Figure 21. Typical Control Linkage Lockwire Installation

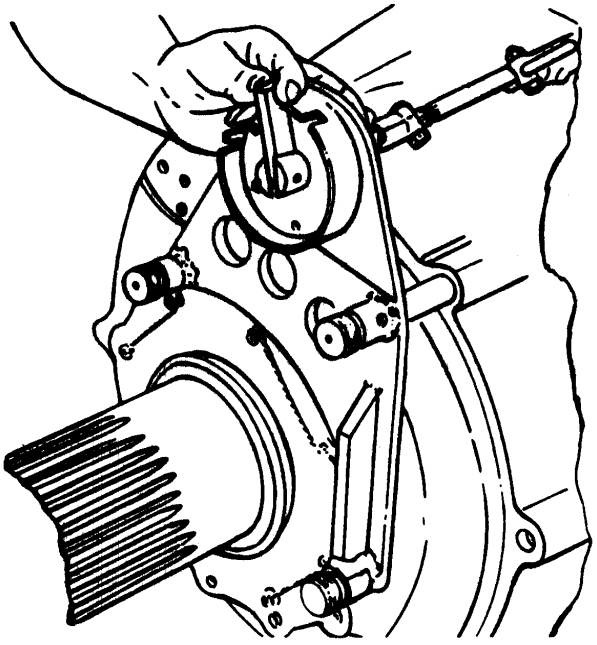

Figure 22. Checking Propeller Linkage with 6796708 Control Linkage Check Fixture

s. Actuate the condition lever on the coordinator to feather and check this position by inserting the propeller rigging pin in the feather slot of the propeller rigging plate.

t. If travel is not correct, adjust the bellcrank fork “in” to decrease travel or “out” to increase. It may also be necessary to readjust forward link to get the range of the total travel correct.

u. Check all nuts for correct torque and lockwire. (See figure 21.)

v. Check the linkage for freedom from interference or binding through the full range of travel. (QA)

w. Check for interference between coupling nut on air inlet housing balance air line and bolt head through propeller control rear lever.

x. Position hose coupling nut flats to provide maximum clearance.

y. Remove the special linkage check fixture from the propeller shaft.

z. Install 6796568 torque adapter on the coordinator control shaft spline.

aa. Using a torque wrench, move the linkage assembly through its full travel. The torque must not exceed 17 lb in. at any point in travel. If the indicated torque exceeds the limit specified above, investigate linkage and eliminate the cause of drag or binding. (QA)

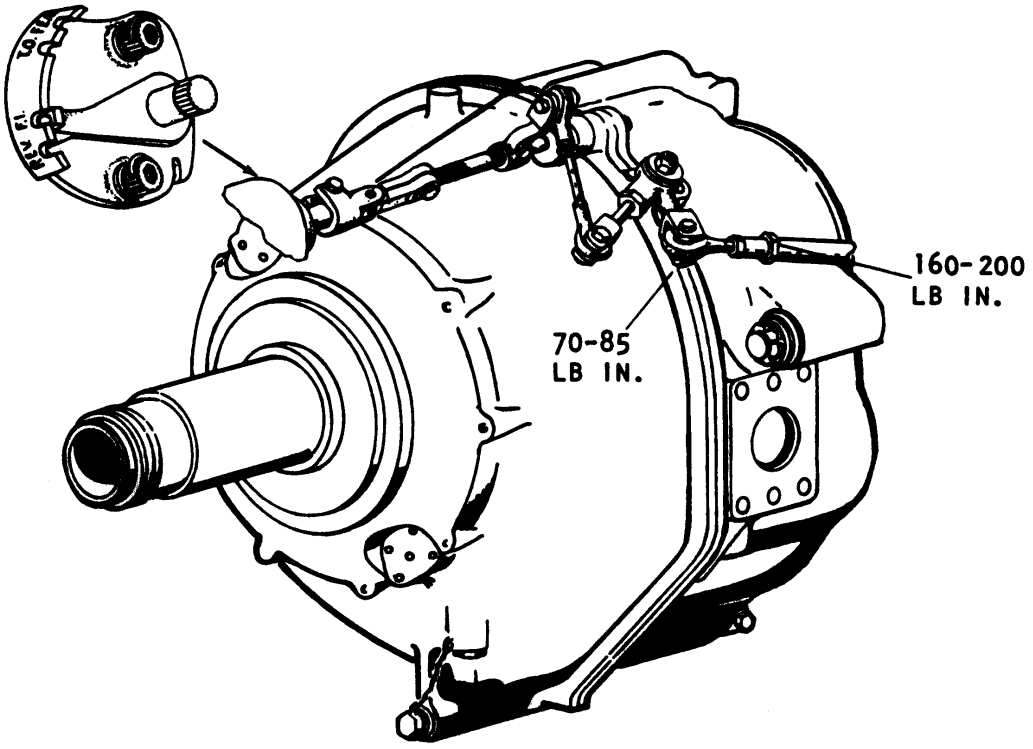

Figure 23. Rigging Plate on Rear of the Propeller

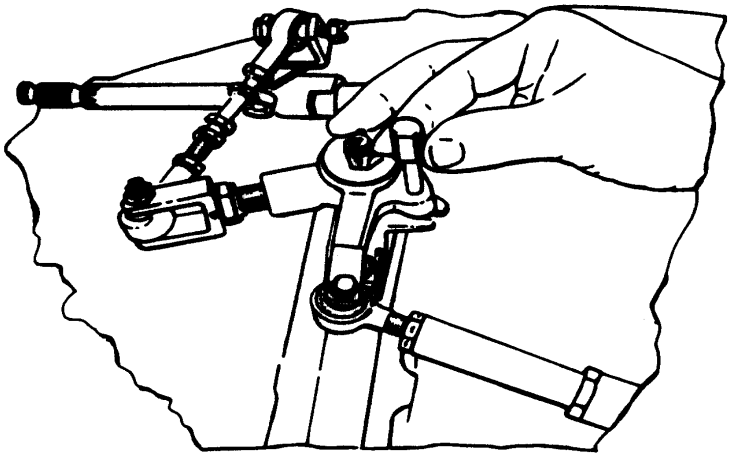

Figure 24. Installing 6796757 Rigging Pin in Bellcrank Rigging Hole

INTERMEDIATE MAINTENANCE

REMOVAL AND INSTALLATION

TORQUEMETER UNIT AND SAFETY COUPLING ASSEMBLY

Reference Material

Reduction Gear Unit Assembly with Safety Coupling Assembly and Torquemeter Unit – Removal and Installation . . . . . WP 027 00

Torquemeter Unit Assembly – Maintenance . . . . . WP 041 00

Alphabetical Index

Subject Page No.

Matched Component Description 5

Torquemeter Housing Assembly – Installation 10

Torquemeter Housing Assembly, Torquemeter Unit, and Safety Coupling Assembly – Removal 2

Torquemeter Unit and Safety Coupling Assembly – Installation 6

Record of Applicable Technical Directives

None

1. **TORQUEMETER HOUSING ASSEMBLY, TORQUEMETER UNIT AND SAFETY COUPLING ASSEMBLY – REMOVAL.**.

Support Equipment Required

Part No./Type Designation	Nomenclature
SWE 8471	Anchor plate
6796089	Attachment, propeller brake release
6796136	Wrench, safety coupling outer member retaining nut
23032404	Spline, starter shaft turning
6796304	Cover, torquemeter inner or outer shaft pickup teeth
6796351	Support, safety coupling retaining nut wrench (Use with 6796136)
6797637	Box wrench, torquemeter to safety coupling mounting bolt
6797753	Guide, torquemeter mid bearing
6797881	Retainer, torquemeter mid bearing roller
6799868	Fixture, bending, torquemeter to safety coupling mounting bolt locktab

a. Separate and remove the reduction gear unit (with torquemeter and safety coupling assembly attached) from the power section compressor assembly. Refer to WP 027 00.

b. Ensure the torquemeter pickup assembly is removed. Refer to WP 027 00.

c. Ensure torquemeter extension shaft coupling plug is securely installed in the AFT end of the assembled torquemeter assembly. If found loose, return to depot.

CAUTION

Do not lean on torquemeter housing as internal damage may result.

d. If installed, remove 6796301 torquemeter spline support (figure 1).

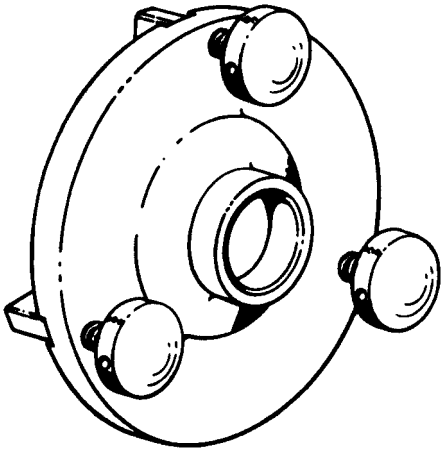

Figure 1. 6796301 Torquemeter Spline Support

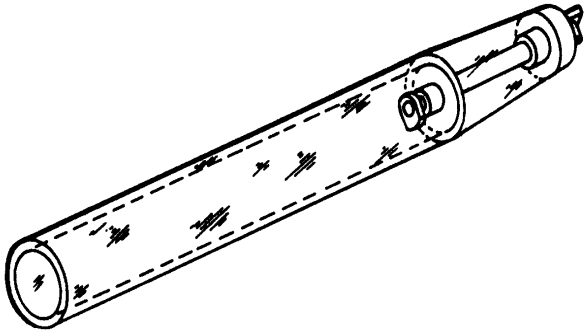

Figure 2. 6797753 Torquemeter Mid Bearing Guide

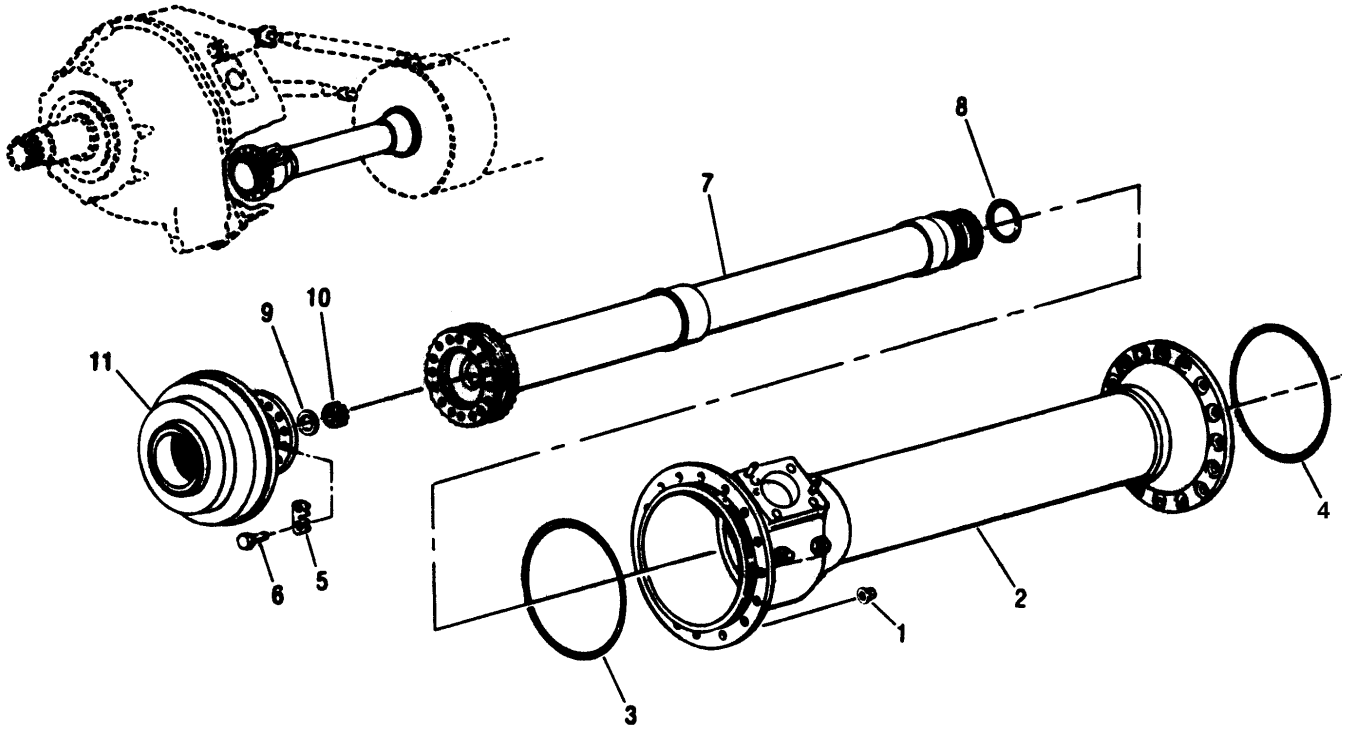

1. Self-locking Nut (16)
2. Torquemeter Housing Assembly
3. Preformed Packing
4. Preformed Packing
5. Locktab (8)
6. Bolt (16)
7. Torquemeter Inner and Outer Shaft Assembly
8. Preformed Packing
9. Key Washer
10. Spanner Nut
11. Safety Coupling Assembly

Figure 3. Torquemeter Unit Assembly

CAUTION

To prevent internal damage, ensure torquemeter is in vertical position before installing 6797753 torquemeter mid bearing guide.

e. Install 6797753 guide (figure 2) over rear end of torquemeter inner and outer shaft (7, figure 3).

(1) Ensure scribe marks on guide knob and body are aligned in the LOAD position.

(2) Position guide against torquemeter bearing inner race with plunger aligned in torquemeter outer shaft plug.

(3) Ensure groove on guide plunger is aligned with retaining ring prong.

CAUTION

While locked, do not rotate 6797753 torquemeter mid bearing guide, as damage to tooling may result.

(4) Push knob in, rotate to the LOCK position, and let knob spring back.

NOTE

Maintain torquemeter housing assembly alignment with torquemeter inner and outer shaft assembly.

f. Remove nuts (1) attaching torquemeter housing (2) to reduction gear unit.

g. Rotate reduction gear unit until torquemeter housing is horizontal.

CAUTION

Do not attempt to pry torquemeter housing assembly from reduction gear unit as damage may result.

h. Carefully remove torquemeter housing.

i. Remove preformed packings (3, 4) from torquemeter housing.

j. Before torquemeter bearing rollers clear 6797753 guide, insert 6797881 retainer (figure 4) into torquemeter bearing outer race and rollers. Insert 6797881 retainer from aft end of torquemeter.

k. Rotate knob of 6797753 guide to LOAD position and remove the guide.

NOTE

Releasing propeller brake will aid in removing torquemeter unit from safety coupling assembly.

l. Release propeller brake as follows:

CAUTION

Ensure no dirt or other foreign matter is in reduction gear plug opening or on 6796089 propeller brake release attachment.

(1) Remove plug installed in right side of reduction gear rear housing, below oil filter.

(2) Insert 6796089 attachment through plug opening (figure 5).

(3) Apply 60–100 psig shop air to release the brake, while turning starter shaft using 23032404 spline (figure 6).

(4) If starter is installed, release the brake and turn propeller shaft using SWE 8471 holder (figure 7).

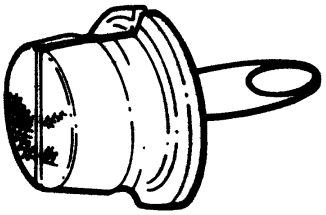

Figure 4. 6797881 Torquemeter Mid Bearing Roller Retainer

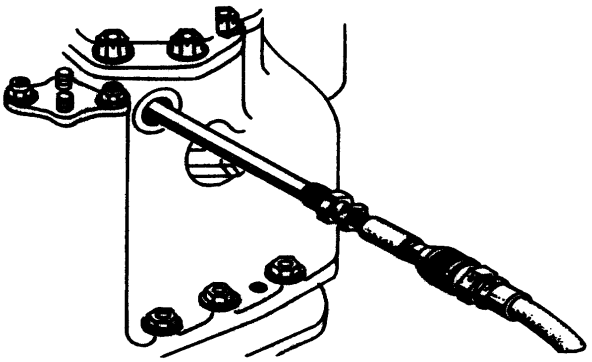

Figure 5. Releasing Propeller Brake Using 6796089 Attachment

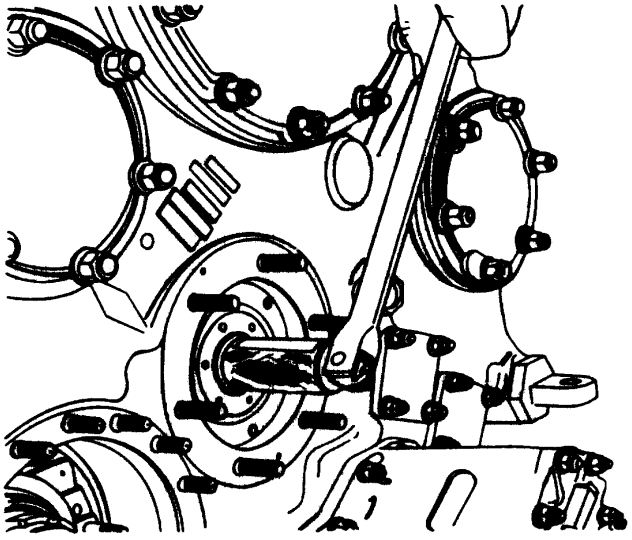

Figure 6. Turning Starter Shaft Using 23032404 Spline

m. Straighten locktabs (5, figure 3) using 6799868 fixture (figure 8).

n. Using 6797637 box wrench, remove bolts (6, figure 3) and locktabs (5) and remove torquemeter inner and outer shaft (7).

o. Remove preformed packing (8).

p. Install 6796304 covers (two required) over torquemeter inner and outer shaft pickup teeth (figure 9).

q. Clean and inspect the torquemeter unit per WP 041 00.

r. Bend key washer (9, figure 3) tab away from spanner nut (10).

s. Position 6796136 wrench (figure 10) and 6796351 support over spanner nut (10, figure 3).

t. Remove spanner nut (10) and key washer (9).

u. Remove safety coupling (11) from reduction gear unit rear housing.

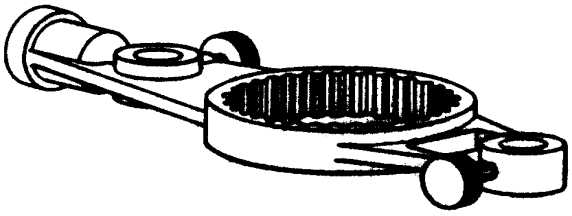

Figure 7. SWE 8471 Anchor Plate

Figure 8. 6799868 Torquemeter-to-Safety Coupling Mounting Bolt Locktab Bending Fixture

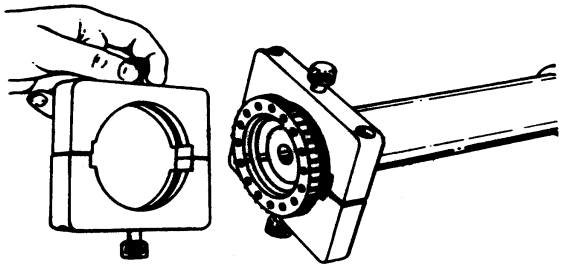

Figure 9. Installing 6796304 Torquemeter Shaft Pickup Teeth Covers

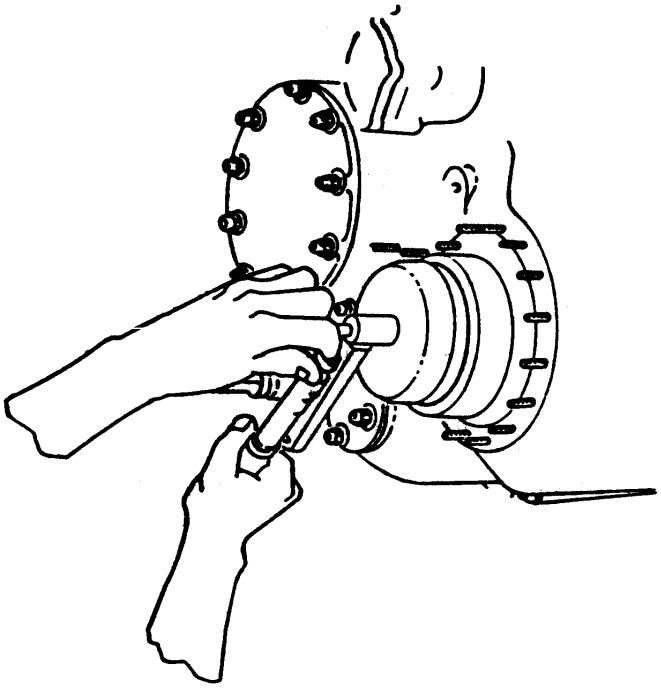

Figure 10. Using 6796136 Wrench and 6796351 Support

2. **MATCHED COMPONENT DESCRIPTION.**

a. The torquemeter housing, inner shaft, outer shaft, and safety coupling are a matched set. The same module serial number (AXXXX) shall be on the torquemeter housing pick-up mounting block rear face, torquemeter inner and outer shafts, and safety coupling assembly.

b. The center roller bearing (mid-bearing) is a matched set identified by identical serial numbers on the rear face of the outer ring, rear face of the roller separator, and tapered OD of the inner ring.

c. Inspect torquemeter assemblies for matched components in accordance with Table 1.

3. **TORQUEMETER UNIT AND SAFETY COUPLING ASSEMBLY – INSTALLATION.**

Support Equipment Required

Part No./Type Designation	Nomenclature
6796136	Wrench, safety coupling outer member retaining nut
6796304	Cover, torquemeter inner or outer shaft pickup teeth
6796351	Support, safety coupling retaining nut wrench (use with 6796136)
6797637	Wrench, box, torquemeter to safety coupling mounting bolt
–––	Wrench, torque (0–500 lb in.)

Materials Required

Specification No./Part No.	Nomenclature
MIL–PRF–23699	Oil, lubricating
SAE–AMS–M–7866	Molybdenum Disulfide
6739827	Locktab (8)

NOTE

Movement of the intermediate member on an uninstalled safety coupling is not reason for rejection of the safety coupling assembly.

To ensure the torquemeter housing, inner shaft assembly, outer shaft assembly, and safety coupling serial numbers are a matched set, the module serial number shown on the torquemeter housing pick–up mounting block rear face shall be the same as on the inner and outer shaft assembly and safety coupling assembly. The module serial number format is “AXXXX”.

a. Ensure inner diameter of safety coupling–to–pinion gear shaft outer diameter fit is 0.0005L to 0.0035L. (QA)

Lubricating Oil, MIL–PRF–23699 2

b. Apply MIL–PRF–23699 engine oil to reduction gear pinion shaft splines and safety coupling (11, figure 3) inner member splines.

c. Install safety coupling on reduction gear pinion gear shaft.

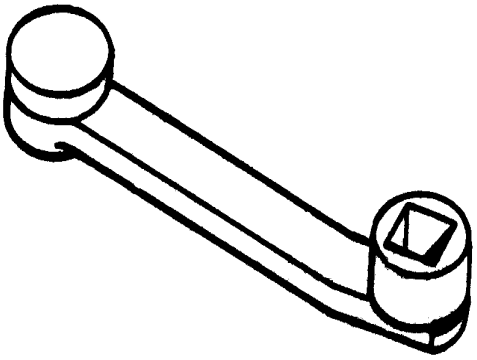

Figure 11. 6797637 Torquemeter–to–Safety Coupling Mounting Bolt Box Wrench

Table 1. Torquemeter Serial Number Requirements

CONDITION	CORRECTIVE ACTION	DISPOSITION
Torquemeter module serial number (AXXXX) stamped on torquemeter housing assembly pick–up mounting block rear face, on torquemeter inner and outer shafts and on safety coupling assembly match. Torquemeter mid–bearing inner, outer race and roller separator serial numbers match.	None.	Remain in service.
Torquemeter module serial number (AXXXX) stamped on torquemeter housing assembly pick–up mounting block rear face. Torquemeter inner and outer shafts and on safety coupling have matched set serial number but not the module serial number. Torquemeter mid–bearing inner, outer race and roller separator serial numbers are matched set.	Mark (vibro–peen) lines through “SERXXXX” serial numbers on inner and outer shaft assembly, and safety coupling assembly. Mark (vibro–peen) torquemeter module serial number (AXXXX) on the forward OD of torquemeter inner and outer shafts. See figures 13 and 14. Mark (vibro–peen) torquemeter module serial number (AXXXX) on the tapered OD of the safety coupling assembly housing.	Following corrective action torquemeter can return to service.
Torquemeter module serial number (AXXXX) stamped on torquemeter housing assembly pick–up mounting block rear face. Torquemeter inner and outer shafts and on safety coupling have matched set serial number but not the module serial number (AXXXX). Torquemeter mid–bearing inner, outer race and roller separator serial numbers DO NOT match.	Mark (vibro–peen) lines through “SERXXXX” serial numbers on inner and outer shaft assembly, and safety coupling assembly. Mark (vibro–peen) torquemeter module serial number (AXXXX) on the forward OD of torquemeter inner and outer shafts. See figures 13 and 14. Mark (vibro–peen) torquemeter module serial number (AXXXX) on the tapered OD of the safety coupling assembly. Replace bearing with new matched serial number bearing.	Following corrective action torquemeter can return to service.

Table 1. Torquemeter Serial Number Requirements (cont.)

CONDITION	CORRECTIVE ACTION	DISPOSITION
Torquemeter module serial number (AXXXX) stamped on torquemeter housing assembly pick–up mounting block rear face. Torquemeter inner and outer shafts and safety coupling have matched torquemeter module serial number (AXXXX). Torquemeter mid–bearing inner, outer race and roller separator serial numbers DO NOT match.	Replace bearing with new matched serial number bearing.	Following corrective action torquemeter can return to service.
Torquemeter module serial number (AXXXX) stamped on torquemeter housing assembly pick–up mounting block rear face. Torquemeter inner and outer shafts have matched set serial number “SET XXXX” Torquemeter safety coupling has different set serial number “SET XXXX“. Torquemeter mid–bearing inner, outer race and roller separator serial numbers match.	None.	Reject torquemeter to depot.
Torquemeter housing damaged. Torquemeter inner and outer shafts and safety coupling have matched torquemeter module serial number (AXXXX). Torquemeter mid–bearing inner, outer race and roller separator serial numbers match.	Replace damaged housing. Stamp module serial number (AXXXX), from old housing, on new torquemeter housing assembly pick–up mounting block rear face. Mark (vibro–peen) lines through old housing serial number making it unreadable.	Following corrective action torquemeter can return to service.
Torquemeter module serial number (AXXXX) NOT stamped on torquemeter housing assembly pick–up mounting block rear face. Torquemeter inner and outer shafts and safety coupling have matched module serial number (AXXXX). Torquemeter mid–bearing inner, outer race and roller separator serial numbers match.	Stamp module serial number (AXXXX), on torquemeter housing assembly pick–up mounting block rear face.	Following corrective action torquemeter can return to service.

Table 1. Torquemeter serial number requirements (cont.)

CONDITION	CORRECTIVE ACTION	DISPOSITION
Torquemeter module serial number (AXXXX) NOT stamped on torquemeter housing assembly pick–up mounting block rear face. Torquemeter inner and outer shafts and safety coupling have matched set serial number but not the module serial number (AXXXX). Torquemeter mid–bearing inner, outer race and roller separator serial numbers match.	None.	Reject torquemeter to depot.
Torquemeter module serial number (AXXXX) NOT stamped on torquemeter housing assembly pick–up mounting block rear face. Torquemeter inner and outer shafts and safety coupling have matched module serial number (AXXXX). Torquemeter mid–bearing inner, outer race and roller separator serial numbers DO NOT match.	Stamp module serial number (AXXXX), on torquemeter housing assembly pick–up mounting block rear face. Replace bearing with new matched serial number bearing.	Following corrective action torquemeter can return to service.
Torquemeter module serial number (AXXXX) NOT stamped on torquemeter housing assembly pick–up mounting block rear face. Torquemeter inner and outer shafts have matched set serial number ”SET XXXX” Torquemeter safety coupling has different “set serial number SET XXXX“. Torquemeter mid–bearing inner, outer race and roller separator serial numbers DO NOT match.	None.	Reject torquemeter to depot.

Lubricating Oil, MIL–PRF–23699 2

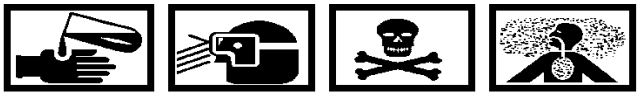

Molybdenum Disulfide Lubricant SAE–AMS–M–7866 19

d. Apply a mixture of MIL–PRF–23699 and SAE–AMS–M–7866 to both sides of key washer (9) and spanner nut (10) thrust face and threads.

e. Install key washer and spanner nut on reduction gear pinion shaft.

f. Tighten spanner nut (10) to first key washer lock alignment beyond torque of 80 lb in. using 6796136 wrench (figure 10) and 6796351 support. (QA)

g. Bend key washer (9, figure 3) tab into spanner nut (10) slot.

h. Remove 6796304 covers. Ensure inner diameter of torquemeter inner shaft–to–safety coupling outer member lip outer diameter fit is 0.0000–0.0015L.

i. Install torquemeter inner and outer shaft (7) on safety coupling (11) with “O” match–marks as nearly in line as permitted by bolt holes.

NOTE

As an aid to installing bolts and bending locktabs, release propeller brake and turn torquemeter shaft per procedure in paragraph 1.

Molybdenum Disulfide Lubricant SAE–AMS–M–7866 19

Lubricating Oil, MIL–PRF–23699 2

j. Apply a mixture of SAE–AMS–M–7866 and MIL–PRF–23699 to bolt threads and install locktabs (5) and bolts (6). Torque bolts to 300–350 lb in. using 6797637 box wrench (figure 11). (QA)

k. Bend locktabs forward over bolt heads to secure bolts. (QA)

4. **TORQUEMETER HOUSING ASSEMBLY INSTALLATION.**

Support Equipment Required

Part No./Type Designation	Nomenclature
6796301	Support, torquemeter spline
6796832	Stand, reduction gear transportation and storage
6797753	Guide, torquemeter mid bearing
6797881	Retainer, torquemeter mid bearing roller
---	Wrench, torque (0–300 lb in.)

Materials Required

Specification No./Part No.	Nomenclature
AS3209–224	Seal, O–ring
AS3209–252	Packing, preformed
AS3209–255	Packing, preformed
MIL–PRF–23699	Oil, Lubricating
SAE–AMS–M–7866	Molybdenum Disulfide

a. Install preformed packing (3, figure 3) on front pilot diameters of torquemeter housing (2).

b. Install preformed packing (4) on rear pilot diameter of torquemeter housing (2).

c. Install 6797753 guide (figure 2) over rear end of torquemeter inner and outer shaft as follows:

(1) Rotate knob on guide until scribe marks are aligned.

(2) Slide guide over torquemeter shaft until front of guide is approximately 0.500 in. from torquemeter bearing inner race.

(3) Locate shallow groove at end of plunger inside guide. Align groove with retaining ring prong (installed in torquemeter outer shaft plug).

CAUTION

Do not rotate guide while locked as damage to tooling may result.

(4) Slide on guide until flush with torquemeter bearing inner race.

NOTE

To ensure the torquemeter housing, inner shaft assembly, outer shaft assembly, and safety coupling serial numbers are a matched set, the module serial number shown on the torquemeter housing pick–up mounting block rear face shall be the same as on the inner and outer shaft assembly and safety coupling assembly. The module serial number format is "AXXXX".

(5) Hold guide against torquemeter bearing inner race. Push in knob of guide approximately 0.250 in., rotate knob 180° and let knob spring back. The guide should be locked in place; if not, repeat steps (1) thru (5).

CAUTION

When installed, the center line of torquemeter pickup assembly should point to the 9 o'clock position, when viewing engine from rear. (QA)

d. Install (matched serialized set) torquemeter housing (2, figure 3) slowly over torquemeter inner and outer shaft (7) while maintaining alignment.

NOTE

The 6797753 guide will contact 6797881 retainer (installed in housing) at approximately 1/3 of distance on torquemeter inner and outer shaft.

e. Ensure preformed packing (3) is installed at front of housing. (QA)

f. Push 6797881 retainer from torquemeter bearing; a slight bumping motion may be necessary. When housing is approximately 2/3 of distance on torquemeter inner and outer shaft. Use care to maintain alignment to prevent lock tube inner diameter from rubbing torquemeter bearing inner race.

g. Remove 6797881 retainer.

CAUTION

DO NOT APPLY LUBRICANT OR ANTI–SEIZE COMPOUND TO REDUCTION GEAR STUDS. THE TORQUE REQUIRED IS A DRY TORQUE AND APPLYING LUBRICANT WILL RESULT IN AN OVER TORQUE CONDITION.

h. Install nuts (1) on reduction gear studs and torque to 140–170 lb in. (QA)

i. Push in knob of 6797753 guide approximately 1/4 in., rotate 180°, and remove 6797753 guide from torquemeter inner and outer shaft (7).

j. Install preformed packing (8) on aft end of torquemeter inner and outer shaft.

k. Install torquemeter pickup assembly. Refer to WP 030 00.

l. Install torquemeter unit assembly (with reduction gear unit attached) to power section compressor assembly. Refer to WP 027 00.

m. If reduction gear unit assembly (with safety coupling assembly and torquemeter unit) are not to be installed on power section compressor assembly, attach 6736301 torquemeter spline support (figure 1) on torquemeter unit and install reduction gear unit assembly in 6796832 transportation and storage stand (figure 12).

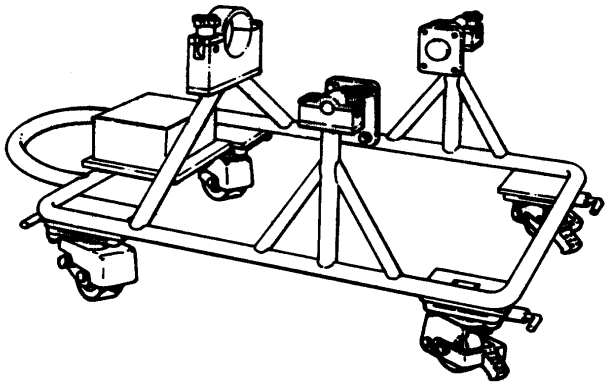

Figure 12. 6796832 Reduction Gear Transportation and Storage Stand

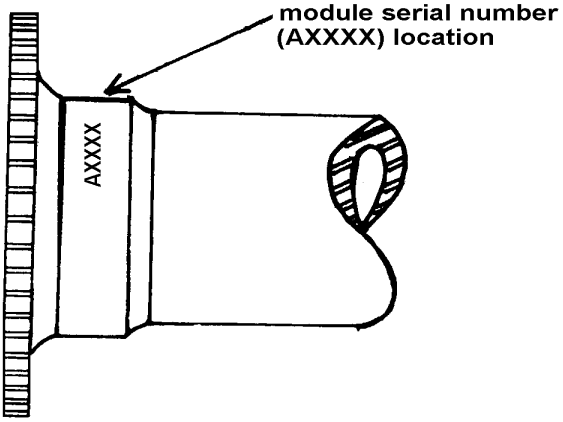

Figure 14. Torquemeter Outer Shaft Module Serial Number (AXXXX) Location

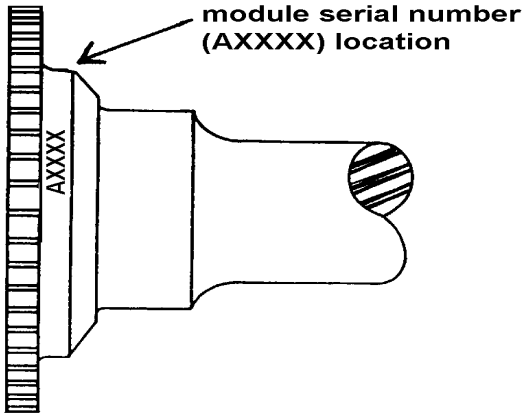

Figure 13. Torquemeter Inner Shaft Module Serial Number (AXXXX) Location

INTERMEDIATE MAINTENANCE

REMOVAL AND INSTALLATION

ACCESSORY DRIVE HOUSING ASSEMBLY

Reference Material

Compressor Assembly–Assembly . . . . . WP 049 00
Power Section Wiring Harness Assemblies–Removal and Installation . . . . . WP 081 00
Anti–icing Air Tube Assemblies–Maintenance . . . . . WP 093 00
External Tubing, Cabling and Clamping Supplement Manual . . . . . NAVAIR 02B–5DG–6–1–1

Alphabetical Index

Subject Page No.
Installation 5
Removal 2
Removal From Parallel Work Stand 3

Record of Applicable Technical Directives

None

1. **REMOVAL**.

Support Equipment Required

Part No./Type Designation	Nomenclature
3826	Lift, accessory drive housing
6795866	Sling, lifting, accessory drive housing
6796987	Stand, turnover, engine components
6797707	Adapter, mounting, accessory drive housing to 6796987 stand
6799969	Protector, accessory main drive shaft

NOTE

The following procedures are for removing the accessory drive housing with external components still installed.

a. Remove oil drain plug (10, figure 1) and preformed packing (9) to drain oil from accessory drive housing (1).

b. Remove cotter pins (4), nuts (5) and washers (6) from inside of air inlet housing.

c. Rotate power section in turnover stand to bottom side up.

d. Remove nuts (7) and washers (6) from accessory drive housing (1) mounting flange.

CAUTION

Do not remove probe from the fuel control. Do not bend or loop thermostat line smaller than 2.5 inches in diameter. Adequately protect probe when removed from air inlet housing.

e. Refer to WP 093 00 for removal of the anti–icing air tube.

f. Remove prop control rear link.

NOTE

Refer to NAVAIR 02B–5DG–6–1–1 for removal of external tubes, wiring, clamps and brackets.

g. Disconnect the following hoses:

(1) Low pressure fuel filter hose at high pressure filter by–pass port tee fitting.

(2) Low pressure fuel filter hose at boost pump outlet.

(3) Two scavenge oil tubes from scavenge oil pump.

(4) Speed sensing valve air hose at outlet of valve.

(5) Speed sensing valve air hose at inlet of valve.

(6) High pressure fuel filter hose at the enrichment valve.

h. Remove electrical wiring as follows:

(1) Right hand wiring harness per WP 081 00.

(2) PLA coordinator control connection and two wire clamps.

(3) Fuel trim valve connection and two wire clamps.

(4) Clamp securing main part of interconnecting wiring harness at front of accessory drive housing.

i. Remove bolt securing coordinator to stand–off bracket.

j. Disconnect fuel tube (1, figure 2) from check valve assembly.

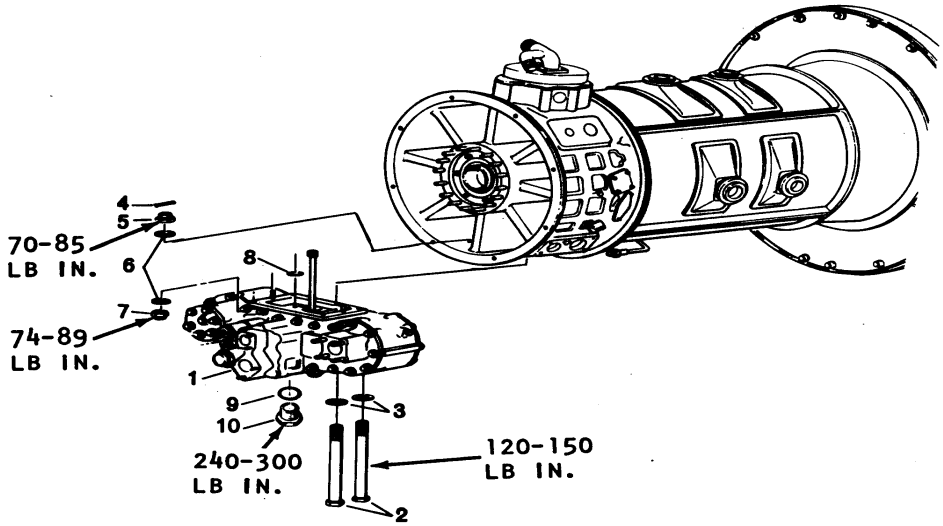

1. Accessory Housing
2. Bolt
3. Plain Washer
4. Cotter pin
5. Castle Nut
6. Washer
7. Self Locking Nut
8. Preformed Packing
9. Preformed Packing
10. Plug

Figure 1. Accessory Drive Housing Assembly Attaching Parts

k. Remove bolts (2, figure 1) and washers (3) from accessory drive housing assembly

l. Install 3826 lift in drain plug hole and attach hoist (figure 3).

CAUTION

Special care must be taken not to bend, break or damage oil scavenge tubes while removing accessory drive housing.

m. Slowly remove accessory drive housing making sure no damage occurs to the oil scavenge tubes.

n. Install accessory drive housing on 6796987 (or 6797703) component turnover stand with 6797707 mounting adapter.

o. Remove preformed packing (8, figure 1).

p. If accessory main drive shaft is not to be removed, install 6799969 protector (figure 4) on accessory drive housing.

2. **REMOVAL FROM PARALLEL WORK STAND**.

a. Use following alternate procedure to remove accessory drive housing when engine is installed in parallel rail work stand and removal is necessary for access to lower half of compressor case.

(1) Attach 6795866 accessory drive assembly lifting sling (figure 5) to a suitable overhead hoist and position strap under accessory drive housing and fuel control. Remove slack from straps with hoist.

(2) Remove and disconnect parts as described in paragraphs a. thru m. of step 1.

(3) Remove accessory drive housing from air inlet housing by lowering onto a dolly, and install 6799969 protector on main drive shaft (figure 4).

(4) Place accessory drive housing and attached components on a bench.

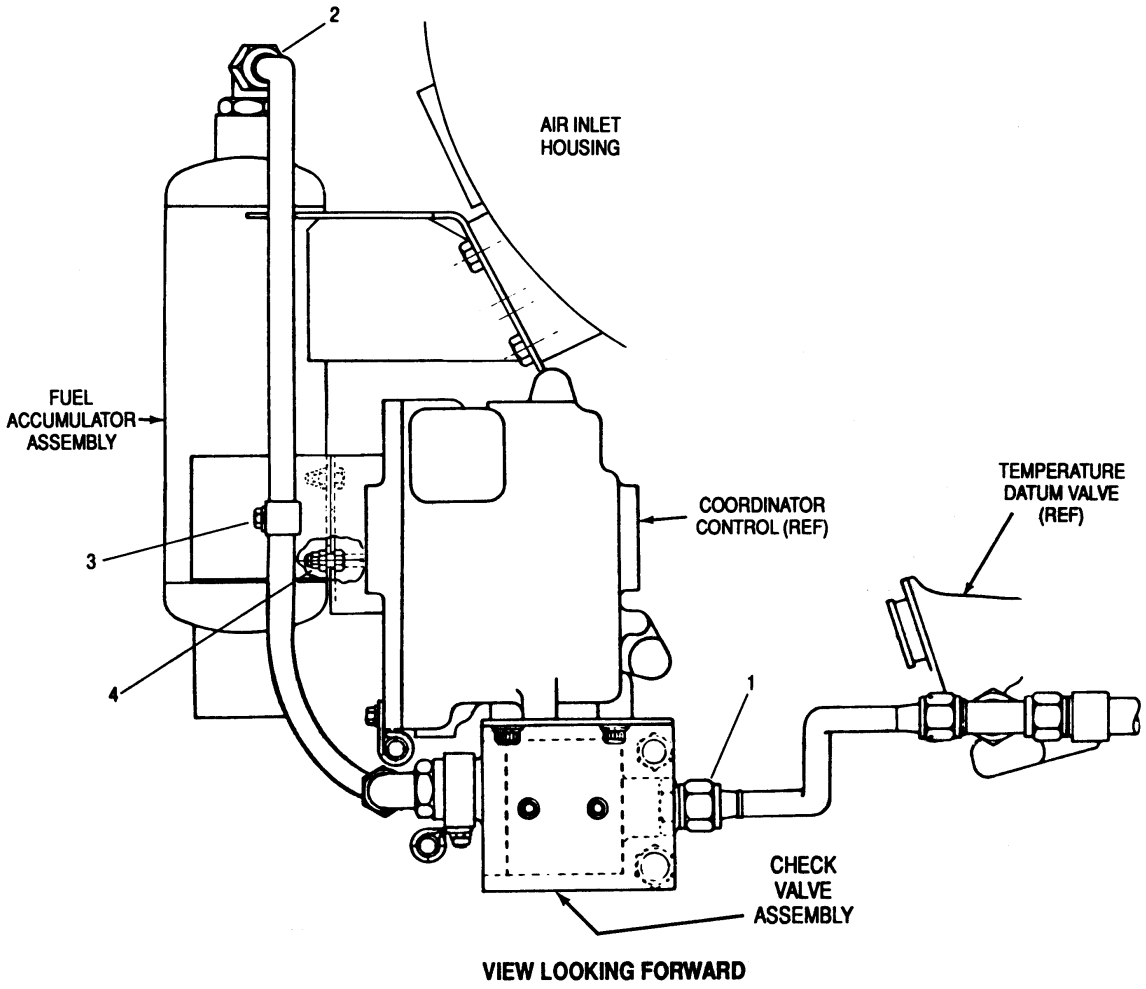

1. Fuel Tube
2. Fuel Line
3. Clamp
4. Bolt and Nut

Figure 2. Fuel Accumulator

3. **INSTALLATION**.

Support Equipment Required

Part No./Type Designation	Nomenclature
3826	Lift, accessory drive housing
6795866	Sling, lifting, accessory drive housing
6799969	Protector, accessory main drive shaft
---	Wrench, torque (0–150 lb in.)
---	Wrench, torque (0–300 lb in.)
---	Wrench, torque (0–500 lb in.)
---	Wrench, torque (0–1000 lb in.)

Materials Required

Specification No./Part No.	Nomenclature
AS3084–07	Packing, preformed (1)
AS3085–114	Packing, preformed (1)
AS3085–118	Packing, preformed (1)
MIL-PRF-23699	Oil, lubricating
MS20995C32	Lockwire
MS24665–151	Pin, cotter (2)
MS9320–10	Washer, flat (7)
MS9320–11	Washer, flat (4)
Permatex 1372	Compound, sealing
Loctite 30588	Compound, sealing

a. Turn compressor assembly in overhaul stand so that accessory drive housing mounting pad is up.

CAUTION

Avoid excessive amounts of sealant that will squeeze out into the inner chamber and contaminate the oil system.

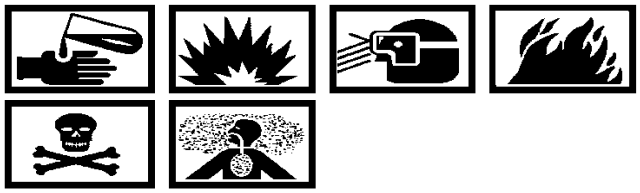

Sealing Compound Permatex No. 1372 or Loctite 30558

b. Apply Permatex 1372 or Loctite 30588 sealing compound to accessory housing pad on inlet housing. Cover 100 percent of the splitline surface with the sealant. (QA)

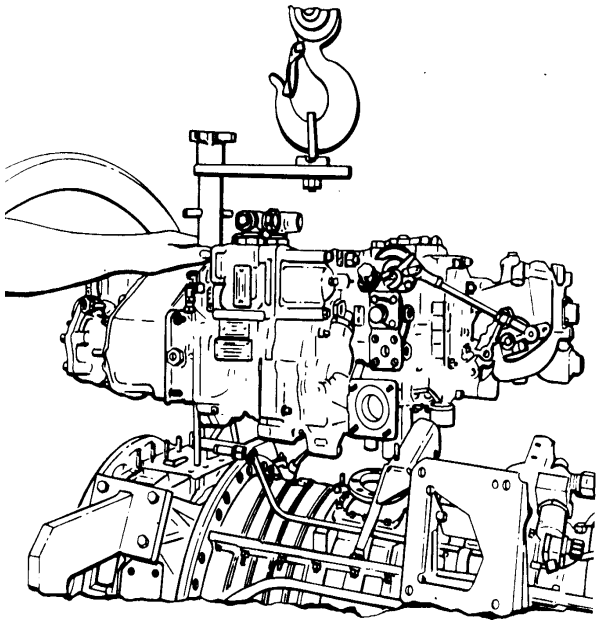

Figure 3. Removing Accessory Drive Housing with 3826 Lift

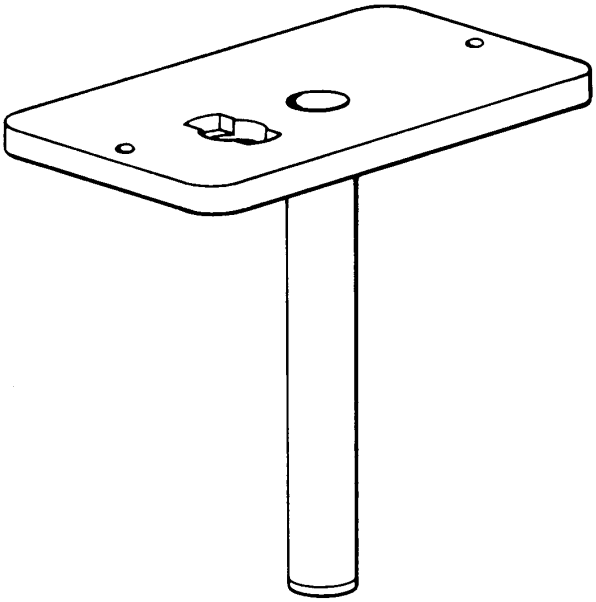

Figure 4. 6799969 Accessory Main Drive Shaft Protector

CAUTION

Before and during assembly of accessory drive housing to compressor unit, use care to avoid damaging or bending the main drive shaft.

c. Remove drain plug (if installed) and install 3826 accessory drive housing lift. Remove housing assembly from stand.

d. Remove 6799969 accessory main drive shaft protector from main drive shaft.

Lubricating Oil, MIL–PRF–23699 2

e. Apply MIL–PRF–23699 lubricating oil and install preformed packing (8, figure 1) around oil pressure opening on top of accessory housing.

f. Lower assembly onto inlet housing mounting pad.

NOTE

Be sure that assembly is properly seated.

g. Slowly turn rotor to mesh accessory drive shaft splines in splines of side gear.

NOTE

After tightening to torque limits, wait ten minutes and retighten to limits. Repeat this wait period–retighten cycle as often as necessary until at least 95 percent of the torque limit is maintained at the last cycle check.

h. Install four bolts (2, figure 1) and washers (3). Torque bolts to 120–150 lb in. and secure with lockwire. (QA)

i. Install two castle nuts (5) and washers (6). Torque nuts to 70–85 lb in. and secure with cotter pins (4). (QA)

j. Install five self locking nuts (7) and washers (6). Torque nuts to 74–89 lb in. (QA)

k. Attach scavenge oil tubes to accessory drive housing external scavenge oil pump. Torque 200 – 250 lb in. (QA)

l. Remove lift and install oil drain plug (10) and preformed packing (9). Torque plug to 240–300 lb in. and lockwire. (QA)

m. Install right hand wiring harness per WP 081 00.

n. Install bolt securing coordinator to the stand–off bracket. Torque bolt 140–180 lb in. (QA)

o. Install PLA electrical connector to the coordinator. Tighten finger tight until seated, plus 20° max angle of turn. (QA)

NOTE

Refer to NAVAIR 02B–5DG–6–1–1 for installation of external parts.

p. Connect all attaching hose connections as follows:

(1) Attach high pressure fuel filter hose at the enrichment valve. Torque 150–200 lb in. (QA)

(2) Attach low pressure fuel filter hose at high pressure filter by–pass port tee fitting. Torque 475–575 lb in. (QA)

(3) Attach low pressure fuel filter hose at boost pump outlet. Torque 200–350 lb in. (QA)

(4) Attach speed sensing valve air hose at outlet of valve. Torque 325–400 lb in. (QA)

(5) Attach speed sensing valve air hose at inlet of valve. Torque 200–250 lb in. (QA)

q. Install the propeller control rear link. Torque nut 70–85 lb in. (QA)

CAUTION

Handle the fuel control thermostat with extreme care to avoid damage and malfunction. Do not bend thermostat lines sharper than a 2.5 in. diameter. The lines shall also be straight for a distance of one inch from the mountings. Bend the flexible thermostat lines so that segmented shielding will not bind on the internal tube.

r. Refer to WP 093 00 for installation of gasket on air inlet fuel control thermostat, control thermostat in probe tube in air inlet housing, anti–icing air tube, and four bolts.

s. Rotate engine to bottom side down.

t. To install accessory drive housing from bottom, use procedures in paragraph 3 except use 6795866 lifting sling (figure 5).

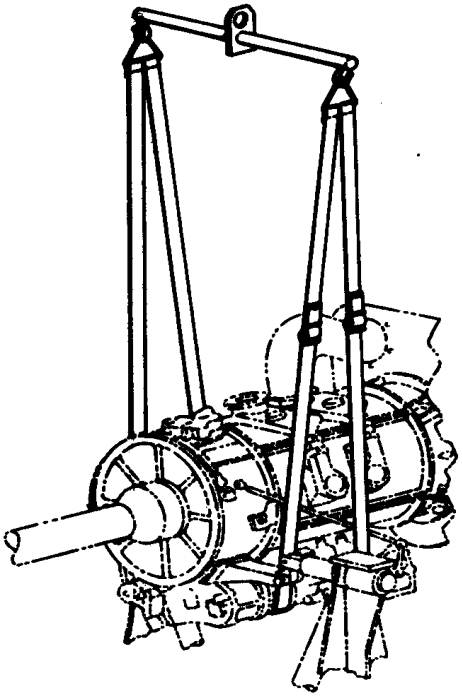

Figure 5. 6795866 Accessory Drive Housing Assembly Lifting Sling

INTERMEDIATE MAINTENANCE

REMOVAL AND INSTALLATION

TURBINE UNIT ASSEMBLY

Reference Material

Compressor Air Inlet Housing and Diffuser Assemblies – Cleaning, Inspection, and Repair . . . . . WP 048 00
Inner Rear Exhaust Cone Assembly, Rear Thermal Insulation Blanket, Turbine Scavenge Oil Pump Assembly and Turbine Scavenge Oil Pump Support – Maintenance . . . . . WP 056 00
Fuel Nozzle Assemblies – Maintenance . . . . . WP 067 00
Thermocouple Assemblies – Maintenance . . . . . WP 083 00
External Tubing, Cabling, and Clamping Supplement Manual . . . . . NAVAIR 02B–5DG–6–1–1

Alphabetical Index

Subject Page No.
Turbine Axial Clearance Measurement 2
Turbine Rotor Clearance Adjustments 9
Turbine Unit Installation 6
Turbine Unit Removal 2

Record of Applicable Technical Directives

None

1. **TURBINE AXIAL CLEARANCE MEASUREMENT.**

Support Equipment Required

Part No./Type Designation	Nomenclature
3856	Gage, turbine rotor to vane assy axial clearance
6796535	Adapter, gage, turbine rotor to vane assy axial clearance

a. Remove the turbine rear scavenge pump and support in accordance with WP 056 00.

b. Install 6796535 turbine rotor to vane assembly axial clearance gage adapter to rear bearing clamp nut to check rotor movement.

c. Install 3856 turbine rotor to vane assembly axial clearance gage to scavenge mounting pump flange.

d. Using 3856 gage, measure the rear bearing clamp nut distance with the rotor in the extreme forward and rearward positions.

e. Record difference of these measurements for use during reinstallation.

2. **TURBINE UNIT REMOVAL.**

Support Equipment Required

Part No./Type Designation	Nomenclature
23032996	Bracket, lifting, turbine
23032998	Adapter, lifting, turbine unit assembly
23033000	Adapter, attaching, turbine unit to 6799764 adapter
3755	Holder, compressor extension shaft forward spline
6795905	Stand, turnover, engine component
6796382	Support, wrench
6796530	Wrench, spanner, turbine to compressor tie bolt locknut
6796533	Wrench, spanner, turbine to compressor tie bolt
6796814	Adapter, mounting, air inlet housing adapter (6796815) to parallel rail stand
6796980	Adapter, rotating, engine component to parallel rail stand
6799764	Adapter, attaching, engine component adapter (2 req'd)

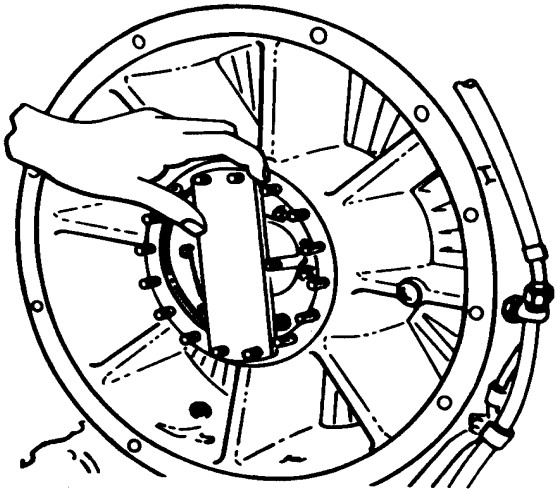

Figure 1. Installation of 3755 Compressor Rotor Holder Tool in the Compressor Extension

a. Install 3755 extension shaft and compressor holder tool in the compressor extension shaft (figure 1).

b. Make a compressor rear bearing internal clearance check before removing the turbine to compressor tie bolt.

NOTE

Turbine rotor movement at this time consists of the compressor rear bearing internal clearance and the axial movement of the compressor rear bearing outer ring in the bearing cage. If this movement exceeds 0.024 in., replacement of the compressor rear bearing is required.

c. Remove the lockring from the tie bolt locknut.

NOTE

The tie bolt locknut has right hand threads.

d. Remove the tie bolt locknut with 6796530 turbine to compressor tie bolt lock nut spanner wrench and 6796382 wrench support (figure 2).

e. Remove the rear turbine scavenge pump drive coupling, metal o-ring gasket and the tie bolt lockpin.

f. Install 6796533 turbine to compressor tie bolt spanner wrench and 6796382 support (figure 3).

g. After the tie bolt is loose, remove the wrench, support and tie bolt.

h. Remove the preformed packing.

i. Remove the tie bolt lockring.

NOTE

Rear bearing clamp nut has right hand threads.

j. Loosen, but do not remove the turbine rear bearing clamp nut using 6796533 wrench and 6796382 support (figure 4).

k. Remove spark igniters and liner supports from combustion chamber outer casing.

l. Remove the turbine rear bearing oil tube and PS7 sensor line.

m. Remove thermocouples. Refer to WP 083 00.

n. Remove the thermocouple harness and attaching brackets. Refer to NAVAIR 02B–5DG–6–1–1.

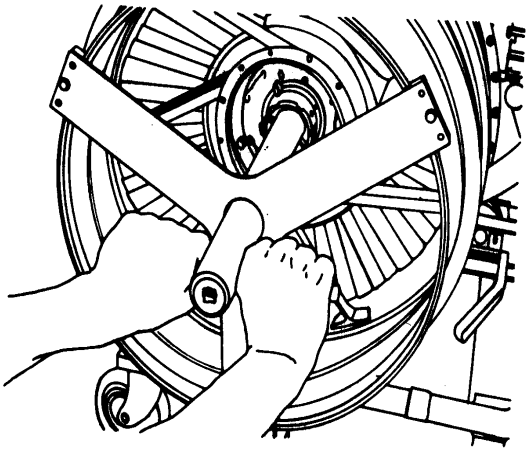

Figure 3. Removing Turbine–to–Compressor Tie Bolt with 6796533 Wrench and 6796382 Support

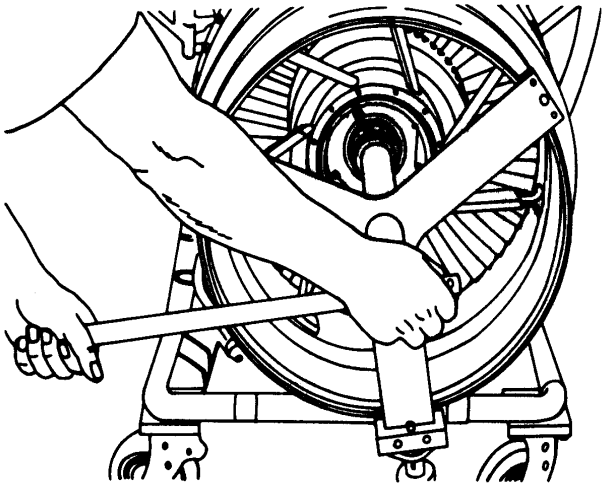

Figure 2. Removing Turbine–to–Compressor Tie Bolt Locknut with 6796530 Wrench and 6796382 Support

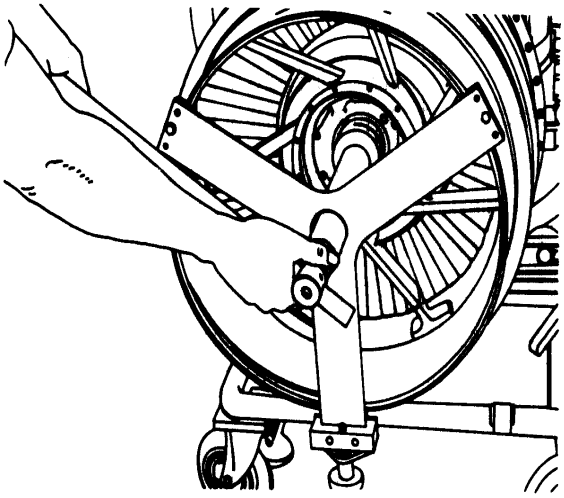

Figure 4. Loosening Turbine Rear Bearing Clamp Nut with 6796533 Wrench and 6796382 Support

o. Remove the EMS harness and attaching brackets.

p. Remove two bolts at the top of the turbine vane casing–to–turbine rear bearing support splitline.

q. Install 23032996 turbine lifting bracket (figure 5).

r. Remove the four top bolts on the turbine inlet casing–to–combustion outer casing splitline.

s. Install 23032998 turbine unit assembly lifting adapter to the turbine unit.

t. Install a hoist to the turbine unit assembly lifting adapter.

u. Raise the hoist until the weight is suspended.

v. Remove all bolts, nuts and brackets between the turbine inlet casing and combustion chamber outer casing splitline.

NOTE

The combustion liners will remain attached to the turbine unit provided the borescope plugs are installed. The turbine coupling shaft will remain attached to the compressor unit.

w. Slowly separate the turbine unit from the diffuser.

x. If turbine is to remain on parallel rail stand, proceed as follows:

(1) Install 6796980 engine component to parallel rail stand rotating adapter (figure 6) on rails.

(2) Install 6799764 engine component adapter attaching adapters (figure 7) on fixed and adjustable shear pads of rotating adapter.

(3) Install 23033000 turbine unit to (6799764) adapter attaching adapter (figure 8) on rear stiffener flange of turbine rear bearing support. Tighten shoe clamps.

(4) Move rotating adapter and align tapped holes of 6799764 adapters with holes in 23033000 adapter. Secure adapters with hex cap screws.

(5) Tighten hand knobs to secure rotating adapter to rails.

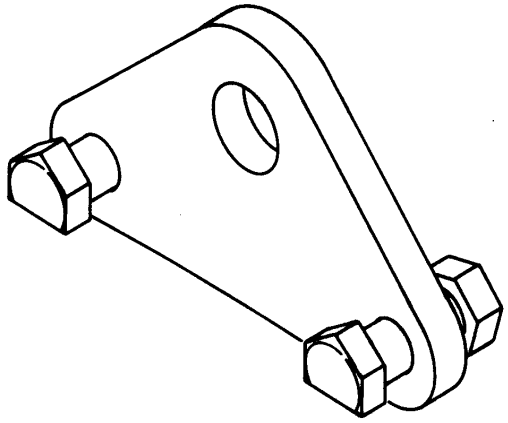

Figure 5. 23032996 Turbine Lifting Bracket

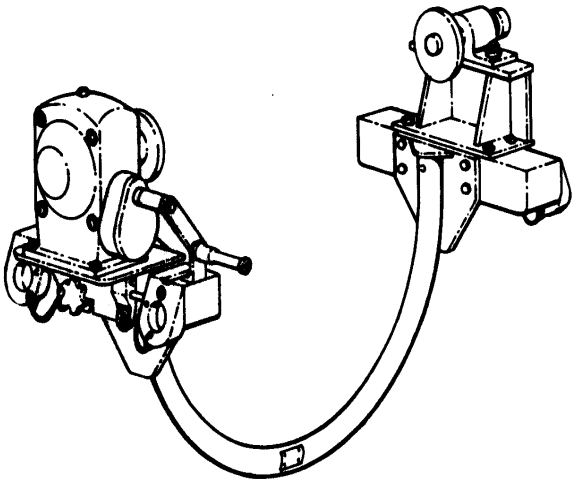

Figure 6. 6796980 Engine Components to Parallel Rail Stand Rotating Adapter

y. If turbine unit is to be placed in 6795905 engine component turnover stand, move turbine unit outside of parallel rail stand and proceed as follows:

(1) Install 6799764 engine component adapter attaching adapters (figure 7) on fixed and adjustable shear pads of 6795905 engine component turnover stand.

(2) Install 23033000 turbine unit to (6799764) adapter attaching adapter (figure 8) on rear stiffener flange of turbine rear bearing support. Tighten shoe clamps.

(3) Move turnover stand and align tapped holes of 6799764 adapters with holes in 23033000 adapter. Secure adapters with hex cap screws.

z. Remove hoist and 23032998 adapter from turbine unit.

aa. Adjust knurled jam nuts (View A, figure 1) on 6796814 air inlet housing adapter (6796815) to parallel rail stand mounting adapter so that no weight is being supported at air inlet housing trunnion adapters.

ab. Remove trunnion adapter quick-release pins and roll 6796814 adapter away from front of engine. (This leaves front of engine available for required maintenance tasks as directed in WP 048 00.)

CAUTION

Turbine rotor assembly must be positioned fully rearward to prevent drop damage to blades, vanes and bearings.

ac. Slowly pull the turbine rotor rearward to eliminate bearing end play.

ad. Rotate the turbine unit to the vertical position.

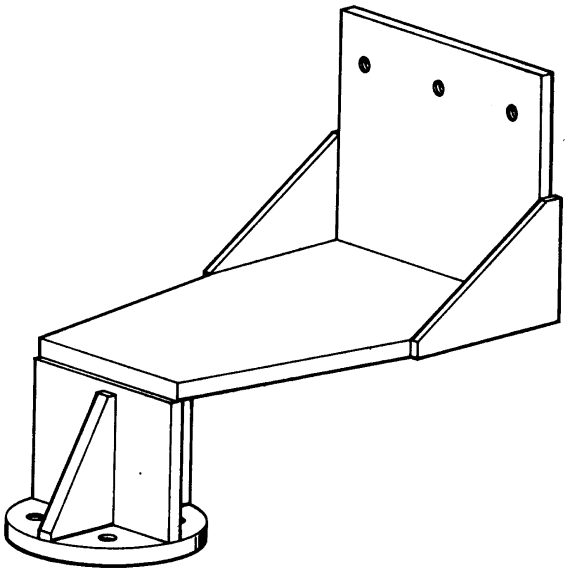

Figure 7. 6799764 Engine Component Adapter Attaching Adapter

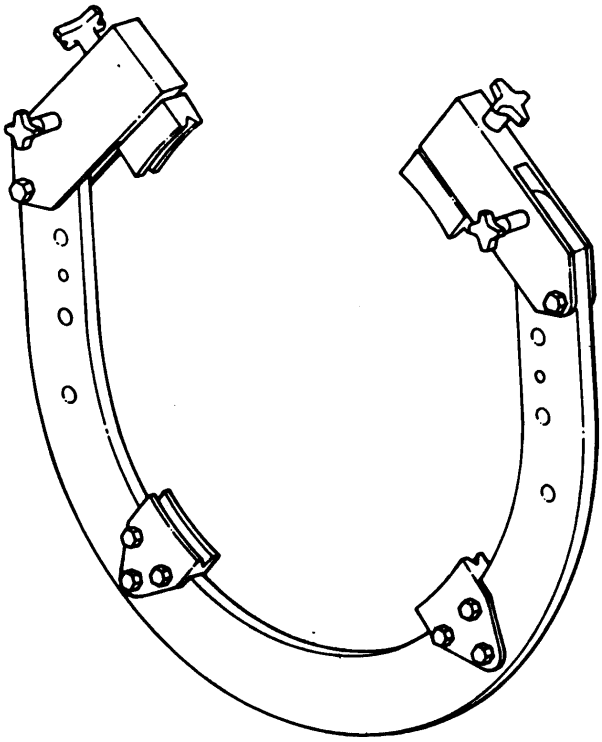

Figure 8. 23033000 Turbine Unit Attaching Adapter to 6799764 Adapter

3. **TURBINE UNIT INSTALLATION.**

Support Equipment Required

Part No./Type Designation	Nomenclature
3755	Holder, compressor extension shaft forward spline
23032996	Bracket, lifting, turbine
23032998	Adapter, lifting, turbine unit assembly
6795905	Stand, turnover, engine component
6799708	Fixture, alignment, combustion chamber inner casing oil tubes
---	Wrench, torque (0-50 lb in.)
---	Wrench, torque (0-150 lb in.)
---	Wrench, torque (0-300 lb in.)

Materials Required

Specification No./Part No.	Nomenclature
MIL-PRF-23699	Engine oil
NS165	Compound, anti-seize
MIL-A-907	Compound, anti-seize
MS20995C32	Lockwire
6816047	Gasket
6724494	Gasket

a. Install 3755 holder (figure 1) in compressor extension shaft.

b. Check alignment of turbine front bearing scavenge and pressure oil tubes as follows:

(1) Torque screws in tube brackets to 22-26 lb in. (QA)

(2) Install recess of 6799708 combustion chamber inner casing oil tubes alignment fixture (figure 9) over combustion chamber inner casing.

(3) Insert gage pins in ends of tubes.

(4) If tubes are not in alignment with fixture, remove fixture and force tube or tubes into alignment by hand pressure. (Do not kink tubes).

(5) Repeat steps (2) through (4) until alignment is achieved. (QA)

(6) Lockwire with 0.032 in. wire after proper alignment is obtained (figure 10). (QA)

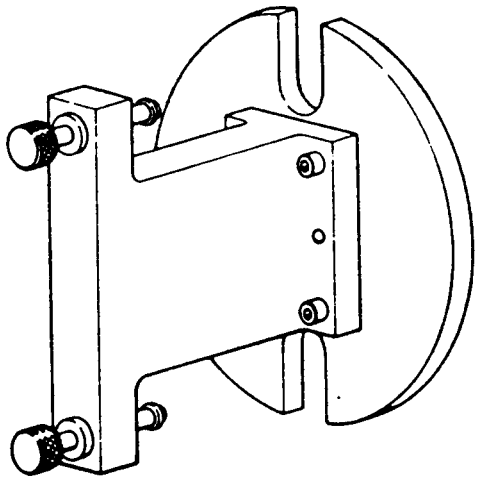

Figure 9. 6799708 Combustion Chamber Inner Casing Oil Tubes Alignment Fixture

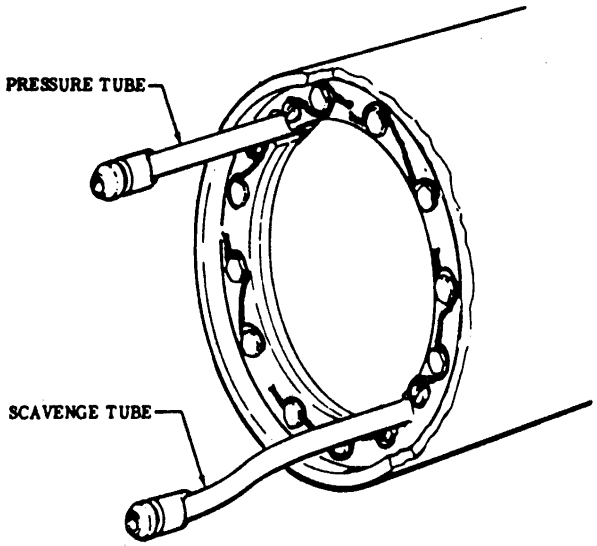

Figure 10. Combustion Chamber Inner Casing Lockwiring

NOTE

The combustion liners will remain attached to the turbine unit provided borescope port plugs are installed.

c. Attach a hoist to the 23032996 turbine lifting bracket. Make sure that the lifting adapter is adjusted to hold the turbine unit in the horizontal position (figure 5).

d. Install 23032998 turbine unit lifting adapter (figure 11).

e. Remove the turbine unit from 6795905 engine component turnover stand.

Lubricating Oil, MIL-PRF-23699 2

f. Apply MIL-PRF-23699 oil to the inner casing seal rings and tubes.

CAUTION

Move the turbine unit very slowly during the last inch of travel to ensure correct engagement of the combustion chamber inner casing with the diffuser sleeve turbine coupling shaft, and the scavenge and pressure oil tubes.

NOTE

During the joining of the assemblies, check continually for proper alignment.

g. Carefully join the turbine unit assembly to the diffuser and outer combustion case splitline.

h. Slowly rotate the turbine rotor until the turbine coupling shaft engages the rear coupling spline and the compressor rotor begins to turn.

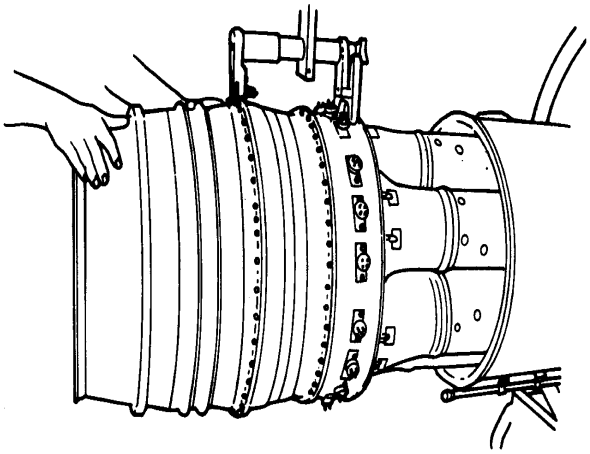

Figure 11. 23032998 Turbine Unit Assembly Lifting Adapter

Anti-seize Compound (Never Seez) NS165 32

i. Apply NS165 to the threads and install the combustion chamber outer casing to the turbine unit inlet casing splitline, bolts, nuts, and brackets.

j. Looking forward, count clockwise and install two bolts heads forward, at the number 4 and 39 positions, to align the splitline holes. Refer to NAVAIR 02B-5DG-6-1-1, WP 004 00.

k. Install the remaining bolts with head forward and torque nuts to 200-220 lb in. (QA)

l. Remove the turbine lifting adapter and install the four bolts and nuts at the top of the turbine inlet casing-to-combustion chamber outer casing splitline. Torque the nuts to 200-220 lb in. (QA)

CAUTION

If the attaching adapter is left attached to the turbine, possible damage to the aircraft heat shield may occur when the engine is being installed to the aircraft.

m. Remove the two bolts with head forward and nuts and remove the attaching adapter from the top of the rear bearing support and turbine vane case splitline.

n. Install the two nuts and bolts with heads forward and torque nuts to 74-89 lb in. (QA).

Anti-seize Compound (Never Seez) NS165 32

o. Apply NS165 to the threads and bore of the rear bracket, the side of the front bracket, the bolt threads, shoulder, and shank.

p. Inspect the combustion liner support assemblies for wear grooves on the pilot diameter. (QA)

q. If wear grooves are detected around half of the circumference of the support assembly and exceed 0.031 in. in depth, position the worn side toward the front of the engine.

r. When wear grooves are detected on both sides of the support assembly and exceed 0.031 in. in depth, replace the support assembly.

CAUTION

Verify proper gasket placement before installing the igniter plugs and liner supports to the combustion chamber outer casing.

Antiseize Thread Compound MIL-A-907 35

s. Apply MIL-A-907 anti-seize compound to the bolt threads and install gaskets, liner supports, and spark igniters with the bolts slightly engaged to facilitate alignment.

t. Install the spark igniters at liner location 2 and 5 with connector openings facing outward.

u. Install the fuel nozzles, if removed, and connect fuel manifold lines. For installation of fuel nozzles, refer to WP 067 00.

v. Install burner drain valves and gaskets.

Anti-seize Compound (Never Seez) NS165 32

w. Apply NS165 to the fuel nozzle and burner drain valve bolts.

x. Torque the fuel nozzle, igniter and burner drain valve bolts 70-85 lb in. Secure with lockwire (QA).

4. **TURBINE ROTOR CLEARANCE ADJUSTMENTS.**

Support Equipment Required

Part No./Type Designation	Nomenclature
3755	Holder, compressor extension shaft forward spline
3856	Gage, Turbine rotor to vane assy axial clearance
6796382	Support, wrench
6796529	Wrench, spanner, turbine rear bearing clamp nut
6796530	Wrench, spanner, turbine to compressor tie bolt locknut

Support Equipment Required (cont)

Part No./Type Designation	Nomenclature
6796533	Wrench, spanner, turbine to compressor tie bolt
6796535	Adapter, gage, turbine rotor to vane assembly axial clearance
6796569	Wrench, positioning, turbine rotor axial movement
---	Wrench, torque (0-2000 lb in.)

Materials Required

Specification No./Part No.	Nomenclature
AS3085-112	Packing, preformed
NS165	Compound, anti-seize
MS9202-023	Gasket, metal O-ring

a. Install 6796535 turbine rotor to vane assembly axial clearance gage adapter and 3856 turbine rotor to vane axial clearance gage to the turbine bearing clamp nut.

b. Using the 6796569 turbine rotor axial movement positioning wrench, pull the rotor to the maximum rearward position as determined by a firm contact with the stator vanes.

c. Preload indicator gage to 0.500 in. and set gage to 0.000 in. (QA)

d. Push the rotor to the maximum forward position as determined by a firm contact with the stator vanes.

e. Check and record the total axial travel from the rearward to forward positions. The total travel must not be less than 0.230 in. (QA) using smaller numbers on outer scale.

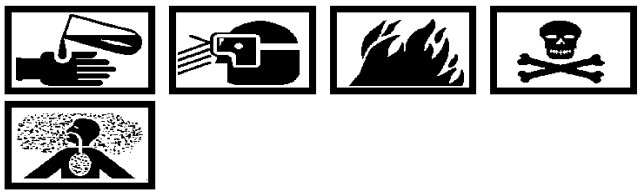

Anti-seize Compound (Never Seez) NS165 32

f. Apply NS165 to the threads of the tie bolt prior to assembly. Install the preformed packing.

g. Remove 6796569 wrench and install tie through rear of turbine rotor shaft. Screw in tie bolt (RH) eight or nine turns using 6796533 turbine to compressor tie bolt spanner wrench and 6796382 wrench support if necessary (figure 3).

h. Install 6796569 wrench and slowly rotate and pull the turbine rotor rearward until a slight scraping sound is detected. This is the maximum aft rotor position.

NOTE

If the rotor cannot be moved rearward sufficiently to obtain this scraping, it may be caused by the tie bolt being positioned too far into the turbine rotor.

i. The nominal position of the turbine rotor with the rotor clamp nut in the locked position is to be 0.133-0.137 in. rearward of the most forward position as determined with the tie bolt removed. Calculate as shown in Table 1. (QA)

Table 1. Required Turbine Rotor Position

(A) Total Travel in.	(B) Rear of Vane Nominal Setting	(C) Clearance Final Setting
0.230 and up	0.135 in.	0.133-0.137 in.

NOTE

To obtain "front of vane" clearance, subtract the nominal setting (B) from the rotor total travel measurement (A).

Example 1

	(A) Rotor Total Travel	0.230 in.
-	(B) Nominal Setting	-0.135 in.
=	(C) "Front of vane" clearance	0.095 in.

j. With the rotor in the extreme rearward position, take a reference measurement from a bar across the pump support mounting flange to the rear bearing clamp nut rear face. Record as measurement (E). (QA)

k. Preload the dial indicator to at least 0.200 in. and zero the dial face. (QA)

l. Install 6796382 support and 6796533 wrench (figure 3).

NOTE

When the same turbine unit is being installed, set the clearance within 0.006 in. of dimensions recorded in the removal procedure.

m. Install 3755 compressor extension shaft forward spline holder in the compressor extension shaft if accessible.

n. Slowly rotate the tie bolt spanner wrench until the gage registers the rotor movement to the required "front of vane" clearance determined in (C) of paragraph i.

NOTE

Be sure that the rotor is in contact with the head of the tie bolt by pulling the rotor rearward.

Turning the tie bolt clockwise one turn increases the "front of vane" clearance 0.050 in. A 7.2° turn on the tie bolt equals a 0.001 in. change in clearance.

o. Remove dial indicator gage and gage adapter.

p. Locate hole in clamp nut and align with slot in turbine rotor shaft.

q. Install the MS9202-023 metal O-ring gasket on the turbine rear scavenge pump drive coupling. Using minimal tie-bolt rotation, align slot in scavenge pump coupling with slot in clamp nut and turbine shaft.

r. Insert lockpin through slots engaging rotor shaft slot tie-bolt slot, and locknut hole.

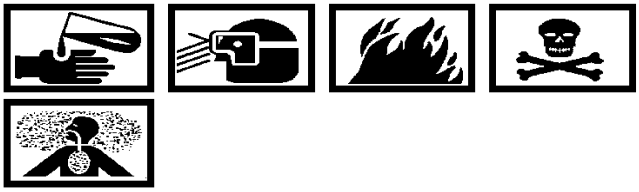

Anti-seize Compound (Never Seez) NS165 32

s. Apply NS165 to the tie bolt locknut threads and install the locknut inside the rear bearing clamp nut.

t. With the 6796530 turbine to compressor tie bolt locknut spanner wrench, torque the locknut to 140-150 lb ft. Loosen and retorque to 125 lb ft. then torque to the next lockpin hole. (QA)

u. Check for hole alignment between the tie bolt locknut and the rear bearing clamp nut so that the lockring can be installed.

v. Check the final rotor position as follows:

NOTE

Turbine rotor movement at this time consists of compressor rear bearing internal clearance (axial) and axial movement of the compressor rear bearing outer ring in the bearing cage. This movement shall not exceed 0.024 in.

(1) Using 6796569 wrench, 6796535 adapter and 3856 gage, obtain the extreme forward and rearward positions of the turbine rotor. (QA)

(2) Take these measurements from a bar across the pump support mounting flange to clamp nut rear face. (QA)

(3) Take the average of these measurements and record as measurement "F". (QA)

NOTE

Take all of the measurements from the bar-to-clamp nut. With the bar and the depth gage in the same position.

(4) Subtract measurement (E) from measurement (F) and record this as measurement (G). This difference is subtracted from the total travel for the "rear of vane" clearance. This dimension must be between 0.133-0.137 in.. (QA)

Example 2

	"F" measurement	0.555 in.
-	"E" measurement	-0.460 in.
=	"G"	0.095 in.
	"A" Total Travel	0.230 in.
-	"G"	-0.095 in.
=	Final Setting	0.135 in.

w. When the "rear of vane" clearance is not acceptable, proceed as follows:

CAUTION

The rotor must not seize or bind when the adjustment is completed.

(1) Clearance greater than allowed in Table 1, remove the tie bolt locknut, pump drive coupling, and lockpin.

(2) Turn the tie bolt in a clockwise direction as necessary to correct the setting error.

(3) Rear-of-vane clearance is decreased by 0.006 in. for each tie bolt slot change.

(4) For clearance less than allowed in Table 1, remove the tie bolt locknut pump drive coupling, and lockpin.

(5) Turn the tie bolt in a counterclockwise direction as necessary to correct the setting error.

(6) Rear-of-vane clearance is increased by 0.006 in. for each tie bolt slot change.

(7) Install a new metal gasket and the pump drive coupling, locknut, and lockpin as described in paragraphs o thru s.

x. Install the lockring to secure the locknut.

y. Install the turbine rear scavenge pump in accordance with WP 056 00.

z. Refer to applicable WP's for reinstallation of any accessory or component removed to perform required maintenance tasks.

aa. Refer to NAVAIR 02B-5DG-6-1-1 for installation of any removed tubing, cabling or clamping.

INTERMEDIATE MAINTENANCE

REMOVAL AND INSTALLATION

COMBUSTION CHAMBER OUTER CASING ASSEMBLY, COMBUSTION LINER ASSEMBLIES AND TURBINE COUPLING SHAFT ASSEMBLY

Reference Material

Turbine Unit Assembly - Removal and Installation . . . . . WP 030 00
Combustion Chamber Outer Casing Assembly - Cleaning, Inspection, and Repair . . . . . WP 050 00
Fuel Nozzle Assemblies - Maintenance . . . . . WP 067 00
Thermocouple Assembly - Maintenance . . . . . WP 083 00
Illustrated Parts Breakdown, Turboprop Engines . . . . . NAVAIR 02B-5DG-4
External Tubing, Cabling and Clamping Supplement Manual . . . . . NAVAIR 02B-5DG-6-1-1

Alphabetical Index

Subject Page No.
Combustion Chamber Outer Casing Installation 6
Combustion Chamber Outer Casing Removal 2
Combustion Liners Installation 7
Combustion Liners Removal 2
Turbine Coupling Shaft Installation 6
Turbine Coupling Shaft Removal From Compressor Coupling 2

Record of Applicable Technical Directives

None

1. **COMBUSTION CHAMBER OUTER CASING REMOVAL.**

a. Remove turbine unit in accordance with WP 030 00 and install in turnover stand.

b. Refer to NAVAIR 02B-5DG-6-1-1 for removal of piping and cabling as necessary.

c. Remove bolts (1, figure 1) and spray shield baffle ring (2) from upper (3) and lower (4) spray shield.

d. Remove upper and lower spray shield.

WARNING

Lifting or hoisting should only be performed by designated personnel. Before lifting, balance the load. Alert personnel in the area before lifting the load.

CAUTION

The compressor assembly is to be maintained in the horizontal position until all external lube system components are removed from the inlet housing. These include the accessory drive housing output shaft, extension shaft and housing, and pressure oil tube. This is necessary to assure that no oil contaminates the compressor rotor when the compressor is set vertically during disassembly.

NOTE

Number 4 fuel nozzle cannot be removed until engine overhaul stand diffuser mounting bracket is removed.

e. Remove self-locking nuts (5), washers (6) and bolts (7) attaching engine rear mount bracket (8) to rear mount plate (9).

f. Remove number 4 fuel nozzle. Refer to WP 067 00.

g. Remove engine side mount piloted bolt (10, figure 1) from engine side mount forward bracket (11).

h. Remove splitline bolts (12, figure 1) and nuts (13) from engine side mount aft bracket (14), engine rear mount bracket (8) and spray shield pressure oil connection bracket (15) and remove brackets.

i. Remove remaining diffuser to combustion chamber outer casing splitline bolts and nuts and remove combustion chamber outer casing from diffuser.

j. Remove burner drain valves, (9, figure 2) bolts (10) and gaskets (11) from outer combustion chamber.

2. **TURBINE COUPLING SHAFT REMOVAL FROM COMPRESSOR COUPLING.**

a. Compress internal retaining ring (1, figure 2) with snap-ring or needlenose pliers and remove turbine coupling shaft (2). Remove retaining ring from shaft. (For retaining rings with “ears.”)

3. **COMBUSTION LINERS REMOVAL.**

Support Equipment Required

Part No./Type Designation	Nomenclature
23033010	Fixture, alignment and lifting combustion liners
6799717	Cover, turbine inlet casing

Materials Required

Specification No./Part No.	Nomenclature
Berol No. 753	Pencil, Silver, Eagle Verithin

CAUTION

Turbine rotor assembly must be positioned fully rearward to prevent drop damage to blades, vanes and bearings.

a. Pull turbine rotor to rear of turbine assembly.

b. Slowly turn turbine unit to vertical position, front end up. (See figure 3.)

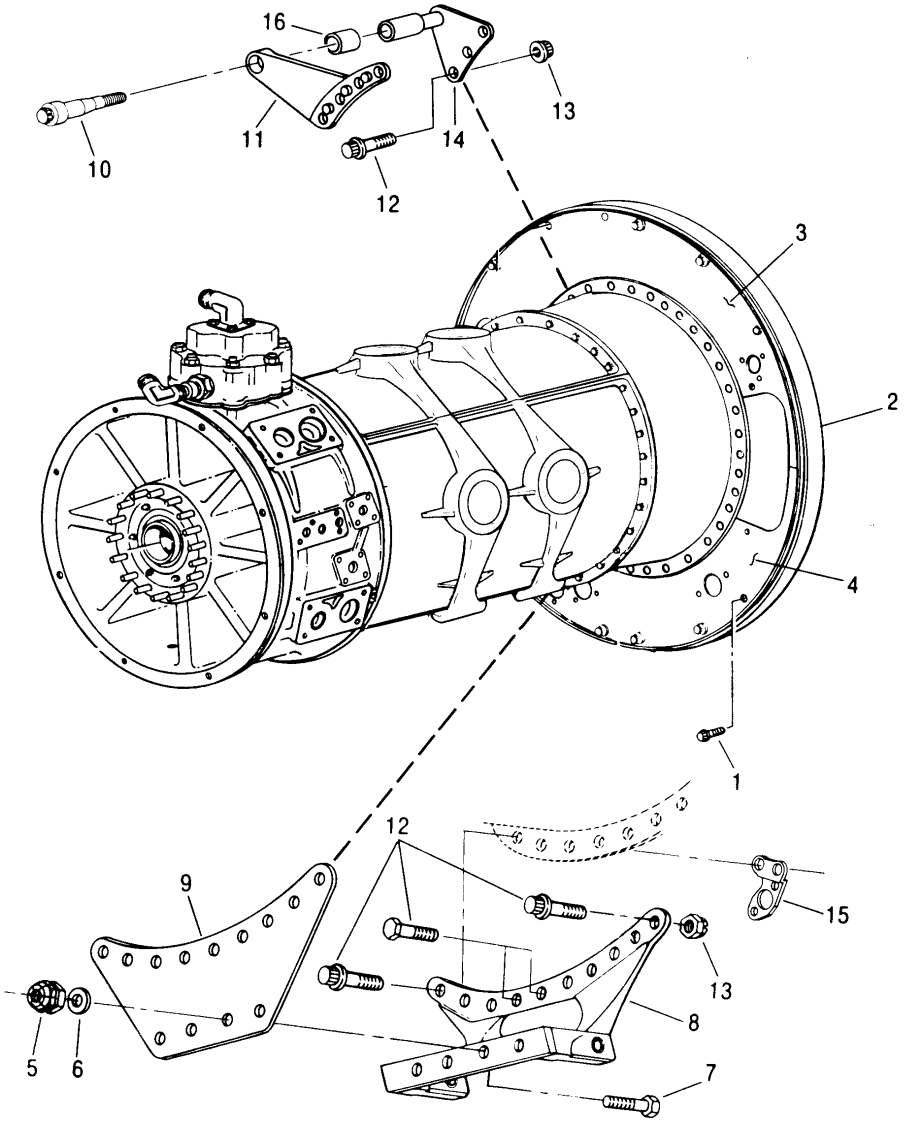

1. Bolt
2. Engine Spray Shield Baffle Ring
3. Engine Spray Shield Upper Baffle
4. Engine Spray Shield Lower Baffle
5. Self–locking Nut
6. Washer
7. Bolt
8. Engine Rear Mount Bracket
9. Engine Rear Mount Plate
10. Engine Side Mount Piloted Bolt
11. Engine Side Mount Forward Bracket
12. Bolts, Splitline
13. Nuts
14. Engine Side Mount Aft Bracket
15. Spray Shield Pressure Oil Connection Bracket
16. Spacer

Figure 1. Engine Spray Shield Baffles and Mounting Brackets

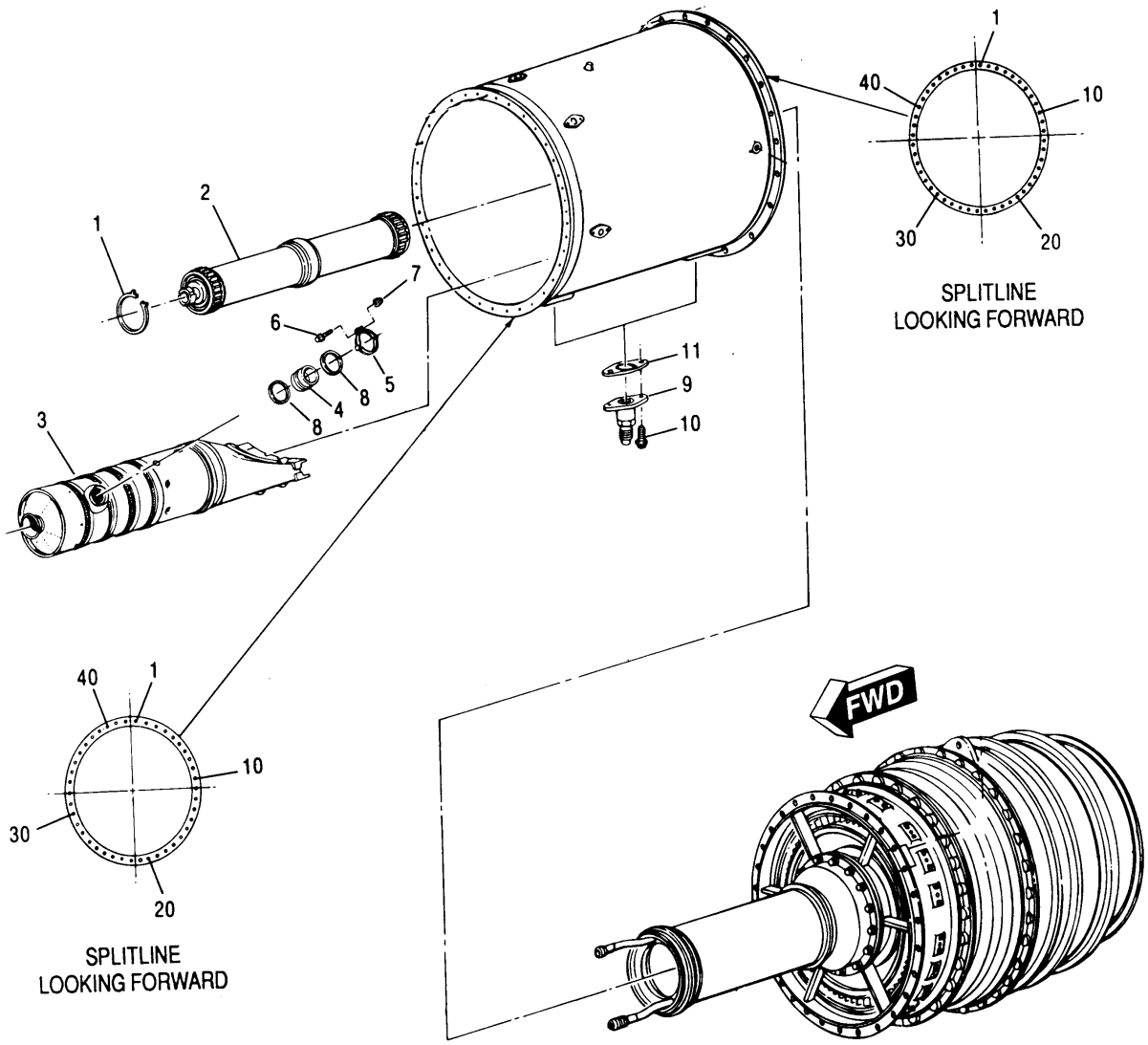

1. Internal Retaining Ring
2. Turbine Coupling Shaft
3. Combustion Liner
4. Crossover Tube
5. Clamp
6. Bolt
7. Nut
8. Spacer
9. Burner Drain Valve
10. Bolt
11. Gasket

Figure 2. Combustion Chamber Details.

c. Remove thermocouples from the turbine unit. Refer to WP 083 00.

d. Remove nuts, gaskets and borescope plugs from turbine inlet.

e. Use compressor lifting sling to support engine while removing engine rear mount bracket.

f. Install 23033010 combustion liners alignment and lifting fixture (figure 3), remove combustion liners (3, figure 2) from turbine unit as an assembly as follows:

(1) Lift combustion liners approximately 2 inches to disengage attaching hangers from inner liner.

(2) Turn liners approximately 2 inches to clear lower rib. Center hangers between liners.

(3) Remove liners from turbine.

g. Lower unit on a bench and detach liner assembly from lift.

CAUTION

To prevent cracking of parts during service, do not use graphite or hydrocarbon pencils for inspection marking on stainless steel parts in the hot section or exhaust section of engine.

h. Number each combustion liner with Berol Corp. Eagle Verithin Silver Pencil for relocation at assembly.

i. Separate combustion liners and crossover tubes (4, figure 2) by removing crossover tube clamps (5) as follows.

(1) Remove bolts (6) and nuts (7) and remove clamps.

(2) Remove crossover tubes and crossover tube spacers (8) from liners.

j. Install 6799717 turbine inlet casing cover. (See figure 4.)

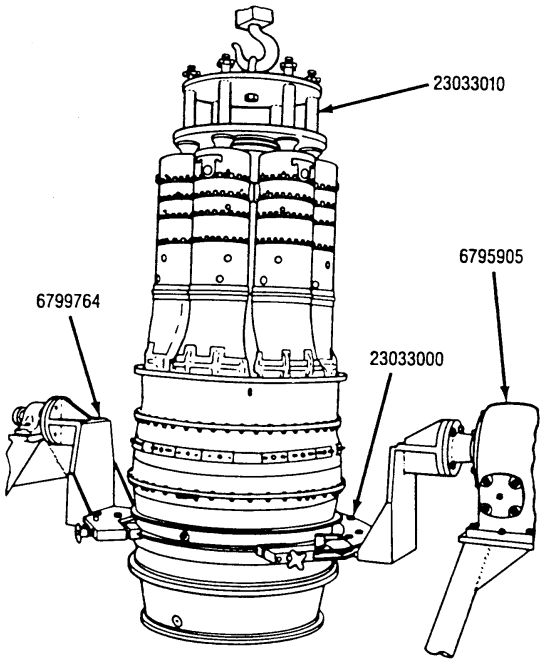

Figure 3. Removal/ Installation of Combustion Liners on Turbine Unit, Using 23033010 Combustion Liner Alignment and Lifting Fixture

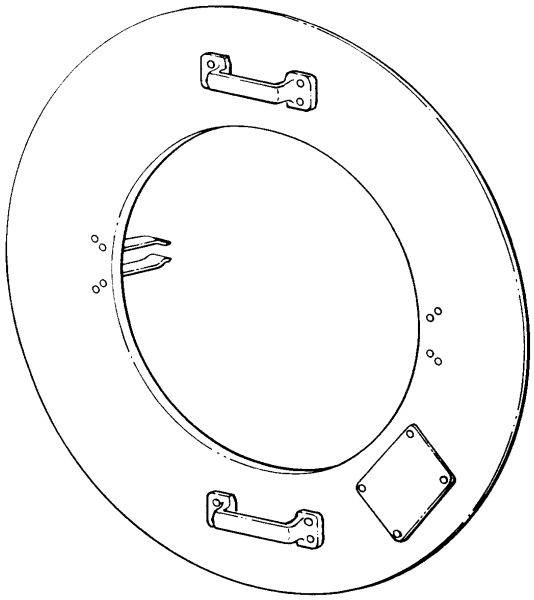

Figure 4. 6799717 Turbine Inlet Casing Cover

4. **TURBINE COUPLING SHAFT INSTALLATION.**

a. Install turbine coupling shaft (2, figure 2) into compressor shaft coupling and secure with internal retaining ring (1). (For retaining rings with “ears”.)

5. **COMBUSTION CHAMBER OUTER CASING INSTALLATION.**

Support Equipment Required

Part No./Type Designation	Nomenclature
___	Wrench, torque (0–1000 lb in.)

Materials Required

Specification No./Part No.	Nomenclature
NS165	Compound, Anti–seize
MS20995C32	Lockwire, 0.032 inch

Anti–seize Compound (Never Seez) NS165 32

a. Apply NS165 to bolt threads and install diffuser to combustion chamber outer casing splitline bolts, nuts and brackets as follows:

NOTE

Bolt hole positions are clockwise as viewed from rear, with position No. 1 being first hole to right of top center. (See figure 2.)

(1) Install bolts with heads forward.

(2) Install engine side mount aft bracket (14, figure 1) at positions 5, 6, and 7.

(3) Install engine rear mount bracket (8) at positions 17 through 26.

(4) Install spray shield pressure oil connection bracket (15, figure 1) at positions 17 and 18.

(5) Install remaining bolts and nuts and torque all nuts to 140–170 lb in. (QA)

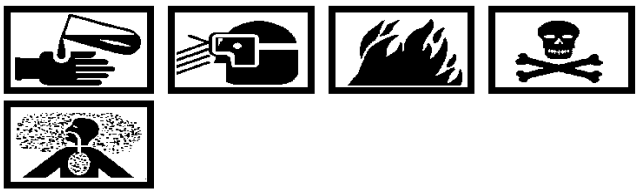

Anti–seize Compound (Never Seez) NS165 32

b. Apply NS165 to threads.

c. Install bolts and nut securing engine rear mount bracket (8) to engine rear mount plate (9).

d. Torque nuts to 240–280 lb. in. (QA).

NOTE

Engine side mount bolt must assemble freely in both brackets without binding.

e. Install engine side mount piloted bolt (10, figure 1) and spacer (16) when applicable, into engine side mount forward bracket (14). Torque bolt 480–720 lb in. for shipment only (QA)

f. Apply NS165 to threads.

g. Assemble engine spray shield baffle ring (2), spray shield upper and lower baffles (3 and 4) to diffuser to combustion chamber outer casing splitline with bolts (1).

h. Torque bolts to 70–85 lb. in. (QA).

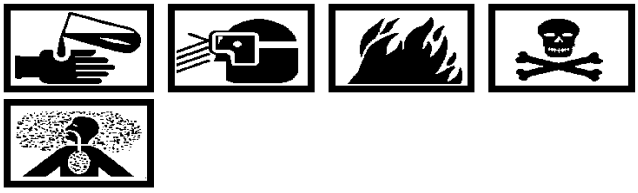

Anti–seize Compound (Never Seez) NS165 32

i. Apply NS165 to bolt threads and install burner drain valves (9, figure 2) and gaskets (11) with bolts (10).

j. Torque bolts to 70–85 lb. in. and lockwire. (QA).

k. Refer to NAVAIR 02B–5DG–6–1–1 for installation of the removed piping and cabling.

l. Refer to WP 050 00 for additional repair/rework of combustion chamber outer casing.

6. **COMBUSTION LINERS INSTALLATION.**

Support Equipment Required

Part No./Type Designation	Nomenclature
23033010	Fixture, alignment and lifting, combustion liners
---	Wrench, torque (0-50 lb in.)
---	Micrometer (0-1 in.)

CAUTION

Do not allow turbine rotor to drop during changing of positions.

Ensure turbine unit is in the vertical position in stand, front end up.

Be sure crossover tubes and hangers are properly engaged. Do not tap fuel nozzle ferrules to seat liners. Liners may be lightly tapped on front outer rim to ensure seating.

Do not use excessive force during assembly.

NOTE

It may be necessary to loosen fuel nozzles in diffuser to assure ease of installation of combustion liners onto fuel nozzles.

a. Remove cover from turbine inlet and install combustion liners (3, figure 2). Liners must seat over saddles of turbine first-stage vane assemblies.

b. Install 23033010 alignment and lifting fixture.

c. Measure and record dimension “A” (figure 5) at each combustion liner with thickness gage. (QA).

d. Measure and record crossover tube flange thickness “B” with micrometer. (QA).

e. Subtract “B” from “A” to obtain required spacer thickness. (QA).

f. Remove alignment and lifting fixture.

g. Install crossover tubes (4, figure 2) with appropriate spacer (8) (as determined in step e) placed to give approximately equal thickness on both sides of crossover tube flange.

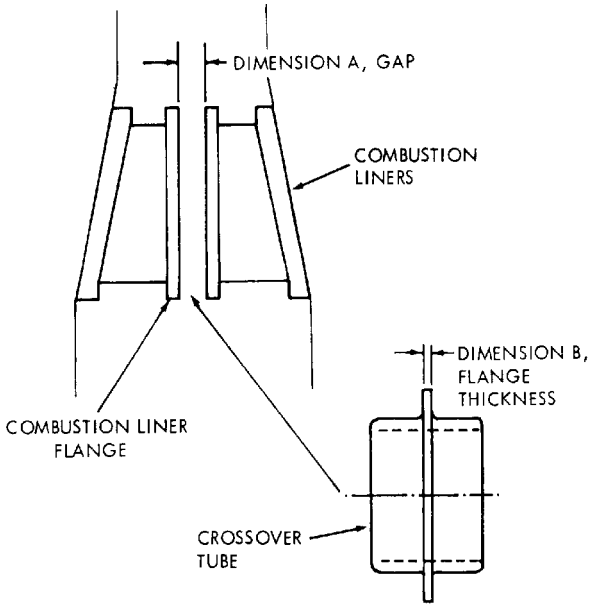

Figure 5. Crossover Tube Gap and Flange Dimensions

h. Reinstall alignment and lifting fixture. If excessive binding occurs, remeasurement is required.

CAUTION

Visually assure that clamp overlaps both combustion liner flanges. Be sure that nuts are not bottomed on bolt shanks. Check clamps tightness to assure resistance to hand turning.

i. Install clamps (5) around liner flanges, crossover tube and spacer assemblies and secure with bolts (6) and nuts (7). Install bolt heads to front of liners and torque to 25-35 lb in. (QA).

j. Remove alignment and lifting fixture.

k. An alternate method for assembling crossover tubes, spacers and clamps while liners are positioned over the first-stage vanes, is to place the liners on a bench after measurement and complete steps g through i remotely from the engine. Assembly is then lifted into position as a unit.

l. Install borescope plug.

m. Install thermocouples and gaskets. Refer to WP 083 00.

INTERMEDIATE MAINTENANCE

REPLACEMENT

REDUCTION GEAR DRAIN PLUG INSERTS

Reference Material

None

Alphabetical Index

Subject Page No.

Reduction Gear, Front Housing, Drain Plug Flanged Bushing
Replacement 2

Record of Applicable Technical Directives

None

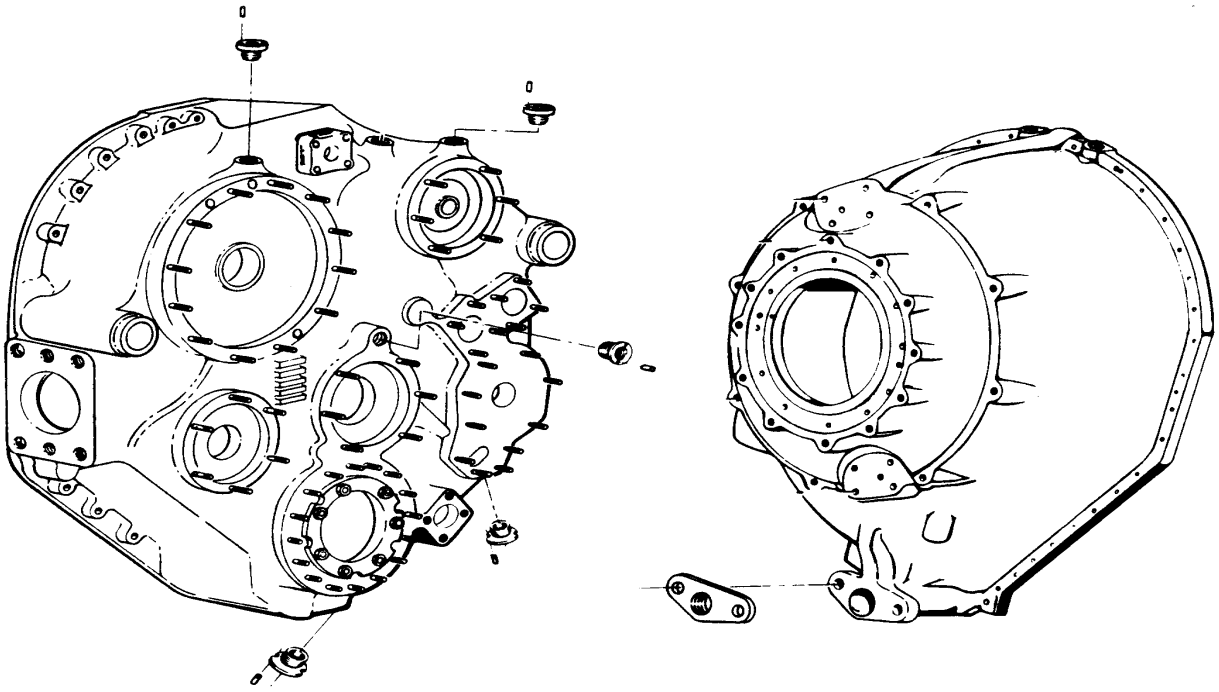

Figure 1. Reduction Gear Drain Plug Inserts and Flanged Bushing Locations

1. REDUCTION GEAR, FRONT HOUSING, DRAIN PLUG FLANGED BUSHING REPLACEMENT.

Support Equipment Required

Part No./Type Designation	Nomenclature
–––	Wrench, torque (0–300 lb in.)

Materials Required

Specification No./Part No.	Nomenclature
AS3085–122	Packing
MS20995C32	Lockwire, 0.032 inch
6828954	Bushing, screw, flanged

a. Inspect drain plug flanged bushing, located at bottom of reduction gear front housing looking rearward (see figure 1), for oil leakage and damaged threads. Replace a damaged bushing as follows:

(1) Remove lockwire and two bolts securing flanged bushing to front housing.

(2) Remove flanged bushing from front housing and discard.

(3) Place new packing on new flanged bushing.

(4) Insert new flanged bushing and packing into front housing.

(5) Replace two bolts securing bushing to front housing. Torque bolts to 150–200 lb in. and secure with 0.032 in lockwire. (QA)

INTERMEDIATE MAINTENANCE

REPLACEMENT

REDUCTION GEAR REAR HOUSING OIL SEALS

Reference Material

Reduction Gear Unit Parts – Cleaning, Inspection, Repair, and Replacement . . . . . WP 039 00

Quick Engine Change Manual A1–E2C2A–QEC–000

Quick Engine Change Manual, Intermediate Maintenance with Illustrated Parts Breakdown A1–E2C2A–QEC–010

Alphabetical Index

Subject Page No.

Rear Housing Oil Seals Replacement 2

Record of Applicable Technical Directives

None

1. **REAR HOUSING OIL SEALS REPLACEMENT.**

Support Equipment Required

Part No./Type Designation	Nomenclature
6797574	Pusher, tachometer drive oil seal
6798804	Puller, tachometer drive oil seal
6897430	Puller, starter drive shaft seal
6895966	Pusher, accessory drive shaft lip seal

Materials Required

Specification No./Part No.	Nomenclature
MIL–PRF–23827	Grease
MIL–PRF–81322	Grease (alternate)
MIL-PRF-23699	Oil, lubricating
SAE–AMS–M–7866	Molybdenum disulfide, lubricating, technical
6873907	Seal (3)
6874912	Seal
6875852 or 6851489	Seal (2)
6877242–001	Packing, preformed

a. Remove and install engine tachometer alternator drive shaft seal as follows (figure 1):

NOTE

When an alternator, hydraulic pump, tachometer, starter or engine driven component is removed, inspect the internal splines of drive shafts in reduction gear per WP 039 00.

(1) Remove tachometer or alternator. Refer to A1–E2C2A–QEC–000 or A1–E2C2A–QEC–010.

(2) Remove seal (3) using 6798804 tachometer drive oil seal puller (figure 2).

(a) Insert puller head into seal (3, figure 1) and over shaft.

(b) Turn knob into seal until hand tight.

(c) Slide knocker against knob sharply, until seal is free from housing.

General Purpose Grease MIL–PRF–23827 18

(3) Apply a light coat of MIL–PRF–23827 grease to lip of new 6875852 or 6851489 seal and to outside diameter of the mating shaft.

CAUTION

Surface of seal marked “OUT” must face aft.

(4) Install seal over shaft with spring facing forward and “OUT” facing aft.

(5) Install seal flush to 0.030 in. below mounting pad surface. Seal face shall be parallel with the mounting pad surface within 0.005 in. FIR. (QA)

(6) Using 6797574 tachometer drive shaft oil seal pusher (figure 3), press seal into reduction gear rear housing until pusher bottoms against mounting pad.

(7) Install tachometer or alternator.

b. Remove and install hydraulic pump or alternator drive shaft seal (1, 4 and 10, figure 1) as follows:

(1) Remove pump or alternator. Refer to A1–E2C2A–QEC–000 or A1–E2C2A–QEC–010.

(2) Remove internal retaining ring (2, 5 or 9).

(3) Pry seal from reduction gear rear housing.

(4) Inspect shaft for nicks, burrs, and damage which could cause seal wear.

General Purpose Grease MIL–PRF–23827 18

(5) Coat lip of the new 6873907 seal and outside diameter of mating shaft with MIL–PRF–23827 grease.

General Purpose Grease MIL–PRF–23827 18

General Purpose Aircraft Grease MIL–PRF–81322 37

NOTE

If a double–lip type seal is used, coat both sides of both lips and fill annulus between the lip with MIL–PRF–23827 grease before installation. Alternate grease is MIL–PRF–81322.

(6) Install seal over shaft, with spring toward inside of reduction gear, using 6895966 lip seal pusher (figure 4).

(7) Secure seal with internal retaining ring.

(8) Install hydraulic pump or alternator.

c. Remove and install starter shaft seal (7, figure 1) as follows:

(1) Remove starter. Refer to A1–E2C2A–QEC–000 or A1–E2C2A–QEC–010.

(2) Remove internal retaining ring (6).

NOTE

Whenever a starter is removed, inspect starter pad cavity for corrosion and damage. Repair, if necessary, per WP 039 00.

(3) Remove starter shaft seal (7) from reduction gear rear housing using 6897430 starter drive shaft seal puller (figure 5) in the provided puller groove and seat as follows:

(a) Loosen expander on puller.

(b) Insert four fingers into groove on starter shaft seal (7).

(c) Tighten expander hand tight against fingers.

(d) Slide hammer against slide stop until seal is free from housing.

(4) Remove preformed packing (8, figure 1).

Lubricating Oil, MIL–PRF–23699 2

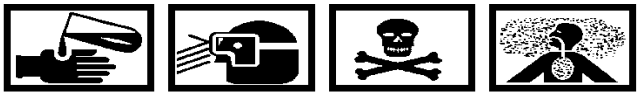

Molybdenum Disulfide Lubricant SAE–AMS–M–7866 19

(5) Soak 6874912 replacement seal approximately five minutes in a lubricating mixture of 75 percent MIL–PRF–23699 lubricating oil and 25 percent SAE–AMS–M–7866 molybdenum disulfide. (QA).

(6) Install new preformed packing on OD of the seal.

(7) Install seal over the shaft, with the puller groove out and seat as follows:

(a) Loosen expander on puller.

(b) Insert four fingers into groove on new seal (7).

(c) Tighten expander hand tight against fingers and secure with internal retaining ring (6).

(d) Slide hammer against expander until seal (7) is seated flush in housing.

(e) Loosen expander and remove puller from seal.

(8) Install starter. Refer to A1–E2C2A–QEC–000 or A1–E2C2A–QEC–010.

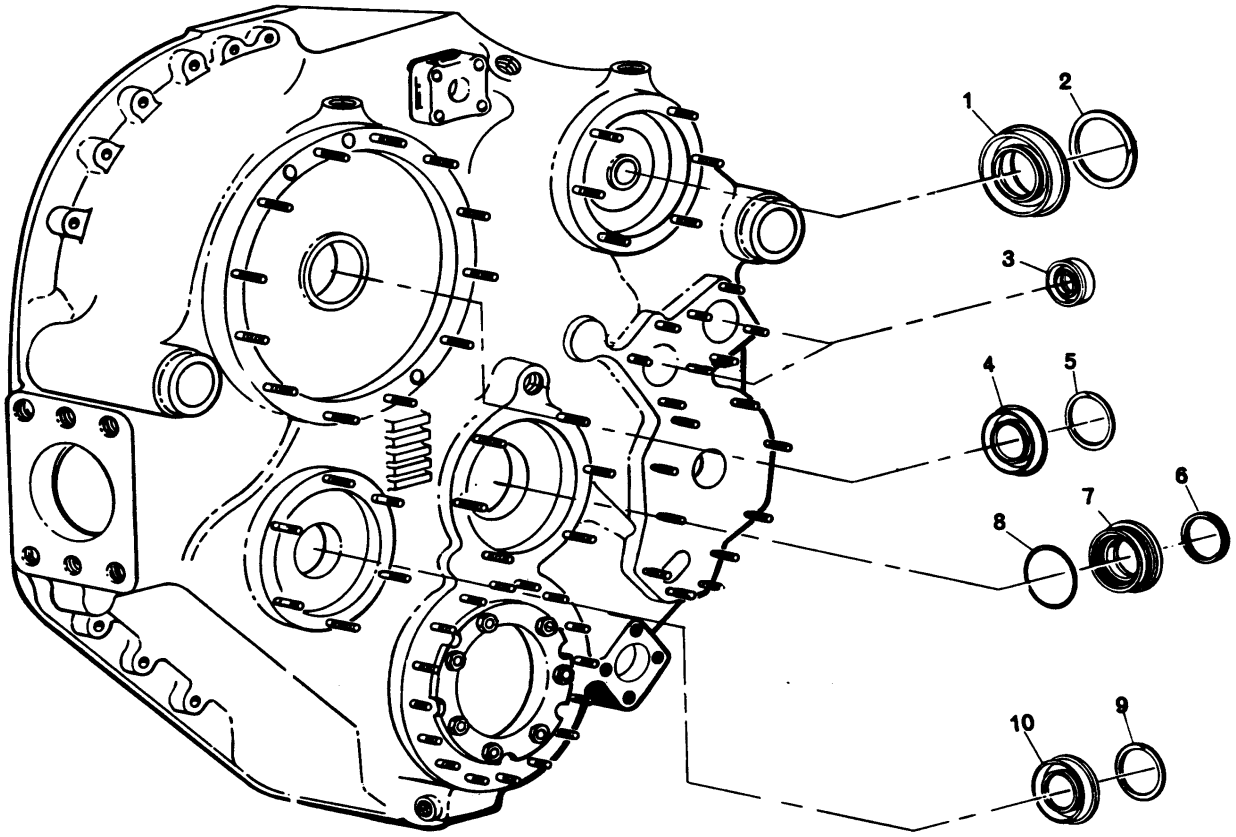

1. Oil Seal
2. Internal Retaining Ring
3. Oil Seal
4. Oil Seal
5. Internal Retaining Ring
6. Internal Retaining Ring
7. Oil Seal
8. O–ring Seal
9. Internal Retaining Ring
10. Oil Seal

Figure 1. Reduction Gear Rear Housing Oil Seals Locations

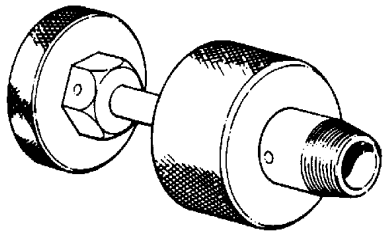

Figure 2. 6798804 Tachometer Drive Oil Seal Puller

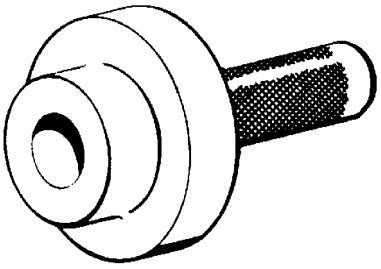

Figure 3. 6797574 Tachometer Drive Oil Seal Pusher

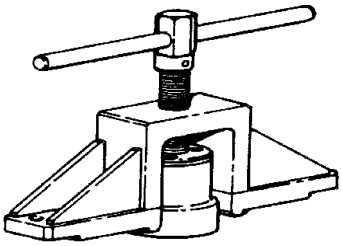

Figure 4. 6895966 Accessory Drive Shaft Lip Seal Pusher

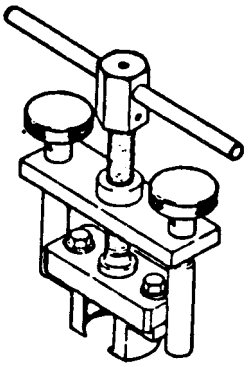

Figure 5. 6897430 Starter Drive Shaft Seal Puller

INTERMEDIATE MAINTENANCE

REMOVAL AND INSTALLATION

PROPELLER SHAFT THRUST BEARING NUT, OIL SEAL AND NOSE BEARING THRUST PLATE

This Work Package Supersedes WP 034 00, dated 15 November 2004

Reference Material

None

Alphabetical Index

Subject Page No.

Propeller Shaft Thrust Bearing Nut Removal 2

Propeller Shaft Oil Seal and Nose Bearing Thrust Plate Removal 2

Propeller Shaft Thrust Bearing Nut Installation 5

Propeller Shaft Oil Seal and Nose Bearing Thrust Plate Installation 5

Record of Applicable Technical Directives

None

1. **PROPELLER SHAFT THRUST BEARING NUT REMOVAL.** (Figures 1, 2, and 3)

Support Equipment Required

Part No./Type Designation	Nomenclature
SWE8100	Powerwrench, Sweeney
SWE8471	Plate, Anchor
23005025	Punch, Cuplock Reforming
6796645	Wrench, Spline, No. 60 Propeller Shaft Thrust Bearing Nut
---	Protective Cover
---	Protective Case

CAUTION

Propeller shaft or Reduction Gear Assembly must be returned to depot for disposition if engine has been operated without propeller rear cone installed, with thrust nut lock (4, Figure 1) misinstalled, or with loss of propeller retaining nut torque. Engine/Propeller operation with propeller shaft torque only hand tight or less may cause damage to propeller shaft journals. Discovery or record of operation in this condition requires Reduction Gear Assembly removal, appropriate AESR entries, and transfer of Propeller Shaft or Reduction Gear Assembly to Depot Level Maintenance for magnetic particle inspection (MPI) and disposition of the propeller shaft. The propeller shaft should be painted RED, demilitarized and disposed of in accordance with DOD 4160.

a. Release propeller shaft thrust nut lock (4) by undimpling cuplock with cuplock reforming punch. Remove thrust nut lock (4) and cuplock and install protective cover on nut lock (4).

b. Turn front housing to the horizontal position in the stand.

NOTE

Install the thrust bearing nut (5) in a protective case to prevent damage to the OD.

c. Install propeller shaft bearing nut wrench (Figure 2), SWE 8100 Sweeney powerwrench, and SWE 8471 anchor plate on propeller shaft (Figure 3). Remove propeller shaft thrust bearing nut (5, Figure 1).

d. Inspect propeller shaft thrust bearing nut (5) for damage that could cause leakage of new seal.

2. **PROPELLER SHAFT OIL SEAL AND NOSE BEARING THRUST PLATE REMOVAL**. (Figure 1)

Support Equipment Required

Part No./Type Designation	Nomenclature
23005025	Punch, Cuplock Reforming
23063503	Puller, Propeller Shaft Seal
6799646	Protector, Propeller Shaft Seal
---	Protective Cover

CAUTION

Remove reduction gear and return to depot for disposition if engine has been operated without thrust nut lock installed, with thrust nut lock misinstalled or with loss of propeller retaining nut torque.

a. Release propeller shaft thrust nut lock (4) by undimpling cuplock with cuplock reforming punch. Remove nut lock and cuplock and install protective cover on nut lock.

b. Remove propeller shaft thrust bearing nut (5). (Refer to Paragraph 1)

NOTE

The nose bearing thrust plate does not need to be removed and changed for thrust plate seal leaks unless it is damaged.

c. Remove internal retaining ring (10).

NOTE

Use of a screwdriver to remove propeller shaft seal assembly will cause damage to the nose bearing thrust plate.

d. Remove the propeller shaft oil seal (7) using propeller shaft seal puller. Store the propeller shaft oil seal (7) in the propeller shaft seal protector.

e. If the nose bearing thrust plate (8) is leaking or damaged then remove the eight retaining bolts (10) and detach the nose bearing thrust plate (8) and preformed packing (9). Discard eight retaining bolts (10). Discard packing (9).

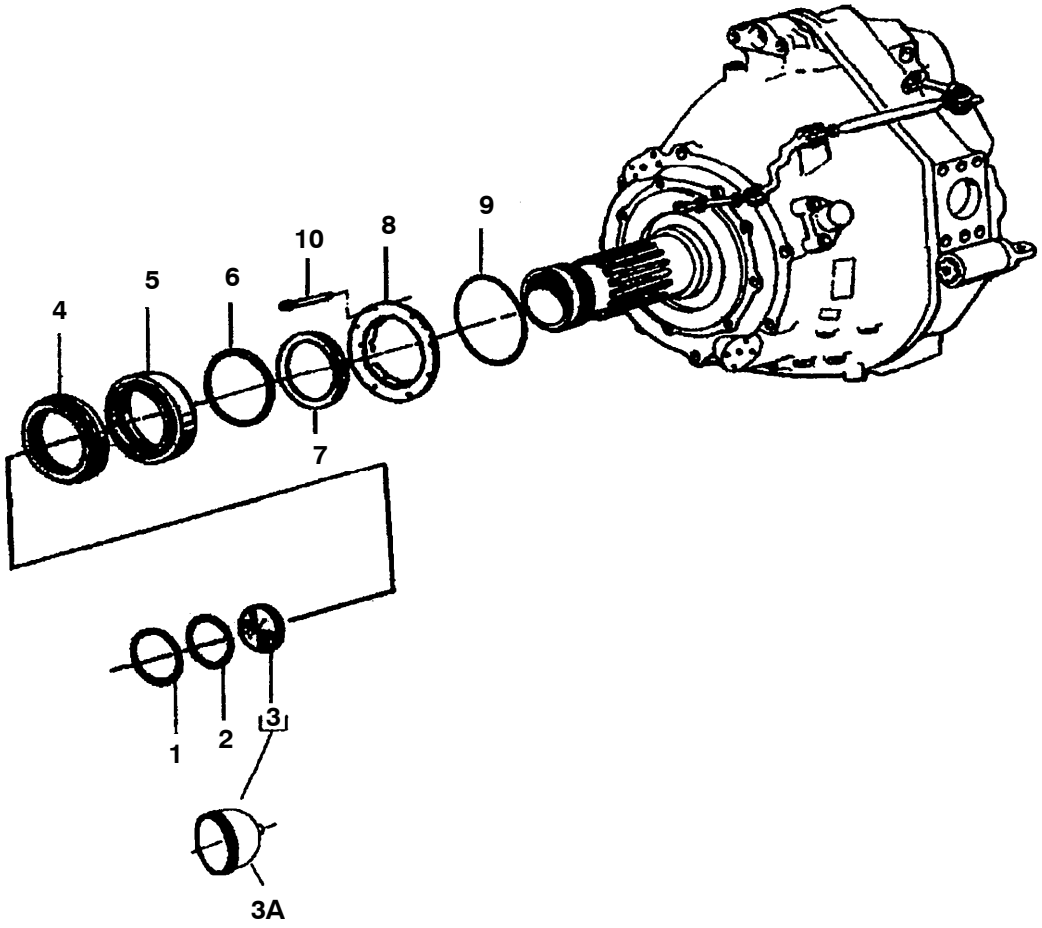

1. INTERNAL RETAINING RING
2. PACKING
3. PROPELLER SHAFT PLUG
3A. PROPELLER SHAFT PLUG
4. THRUST NUT LOCK
5. THRUST BEARING NUT
6. RETAINING RING
7. PROPELLER SHAFT SEAL
8. NOSE BEARING THRUST PLATE
9. PACKING
10. RETAINING BOLT

Figure 1. Propeller Shaft Oil Seal Details

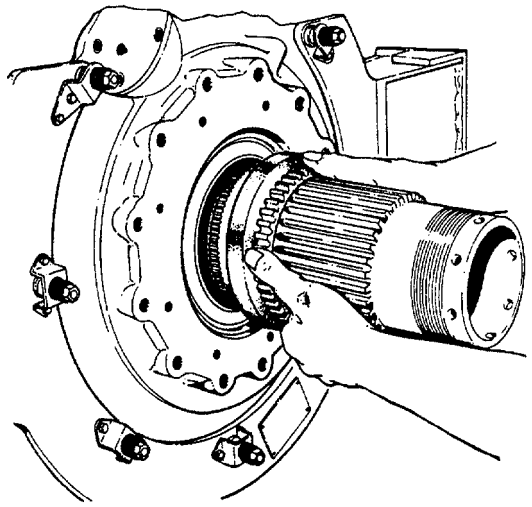

Figure 2. Installing 6796645 Propeller Shaft Thrust Bearing Nut Wrench

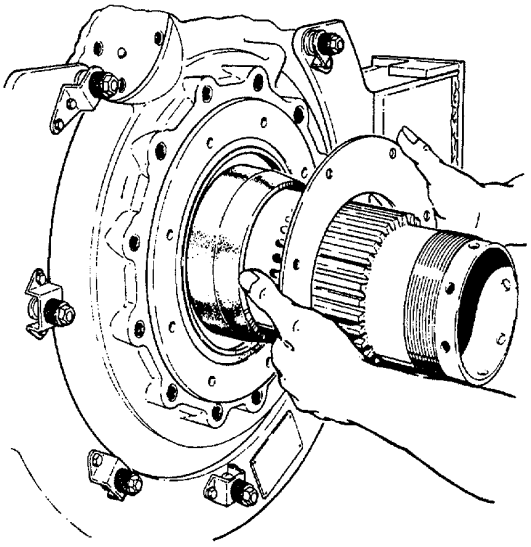

Figure 4. Installing Seal Plate Over 6796651 Propeller Shaft Thrust Bearing Seal Expander

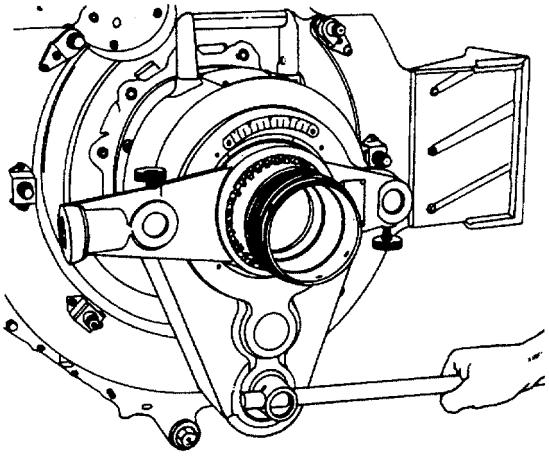

Figure 3. Removing Thrust Bearing Nut with SWE 8100 Powerwrench and SWE 8471 Anchor Plate

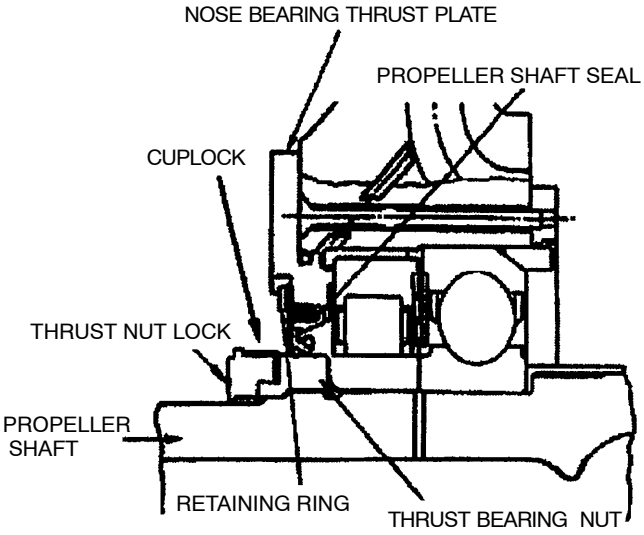

Figure 5. Propeller Shaft Thrust Nut Lock Installation

3. **PROPELLER SHAFT THRUST BEARING NUT INSTALLATION.** (Figures 1, 2, and 3)

Support Equipment Required

Part No./Type Designation	Nomenclature
SWE 8100	Powerwrench, Sweeney
SWE 8471	Plate, Anchor
6796645	Wrench, Spline, No. 60 Propeller Shaft Thrust Bearing Nut
– – –	Wrench, torque 0 to 1000 lb ft.

Materials Required

Specification No./Part No.	Nomenclature
MIL–PRF–81322	Grease

General Purpose Aircraft Grease MIL–PRF–81322 **37**

a. Apply a light coat of grease (MIL–PRF–81322) to propeller shaft threads.

b. Remove propeller shaft thrust bearing nut (5) from protective case and install on shaft hand tight.

c. Inspect propeller shaft thrust bearing nut (5) for damage that could cause leakage of new seal. If propeller shaft thrust bearing nut (5) is serviceable, proceed to next step. If not, replace propeller shaft thrust bearing nut (5).

d. Install propeller shaft thrust bearing nut wrench (Figure 2), SWE 8100 Sweeney powerwrench, and SWE 8471 anchor plate on propeller shaft (Figure 3).

e. Tighten propeller shaft thrust bearing nut (5, Figure 1) to 1000 lb. ft.; loosen, and retighten 12° – 15° past fingertight.

f. Remove SWE 8471 anchor plate, SWE 8100 Sweeney powerwrench, and propeller shaft thrust bearing nut wrench.

4. **PROPELLER SHAFT OIL SEAL AND NOSE BEARING THRUST PLATE INSTALLATION.** (Figures 1, 4, and 5)

Support Equipment Required

Part No./Type Designation	Nomenclature
23005025	Punch, Cuplock Reforming
23051180	Fixture, Installation, Propeller Shaft Seal
23063503	Puller, Propeller Shaft Seal
6796651	Propeller Shaft Thrust Bearing Seal Expander
– – –	Wrench, Torque 0 to 100 lb. in.

Materials Required

Specification No./Part No.	Nomenclature
MIL–PRF–81322	Grease
MS20995C32	Lockwire
Permatex No. 1372 or Loctite 30588	Sealant
6877242–008	Packing, preformed

a. Install propeller shaft thrust bearing nut (5). (Refer to Paragraph 3)

b. Install the propeller shaft thrust bearing seal expander tool on propeller shaft and against propeller shaft thrust bearing nut (5).

c. If nose bearing thrust plate (8) was removed, then proceed with next step. If not, proceed to step j.

d. Check two flat head 1/4–28 screws securing nose bearing thrust plate (8) located inside the RGA for proper torque (70 to 85 lb. in.). Do not remove screws.

General Purpose Aircraft Grease MIL–PRF–81322 **37**

e. Lightly lubricate (MIL–PRF–81322) preformed packing (9) and install into the outer diameter groove on the aft side of the nose bearing thrust plate (8).

CAUTION

The slots of the nose bearing thrust plate (8) must engage the tangs of the bearing cage. An unsolicited autofeather may result if improperly installed.

NOTE

A condition may exist where the nose bearing cage is installed with the tangs aligned in the nose bearing thrust plate (8) at positions other than the 3 and 9 o'clock positions. The cage that is misindexed will still work properly as long as the nose bearing thrust plate (8) aligns with the bearing cage tangs. Misindexed cages are not a reason for BCM to depot provided the nose bearing thrush plate slots, bearing cage tangs, and nose bearing thrust plate holes all align. This alignment could cause the word "TOP" to be at a position other than the 12 o'clock position. If this occurs, the work "TOP" in a position other than 12 o'clock is acceptable.

f. Carefully install the nose bearing thrust plate (8) over the propeller shaft (Figure 4). Verify that the nose bearing thrust plate slots, bearing cage tangs, and nose bearing thrust plate holes all align. (QA)

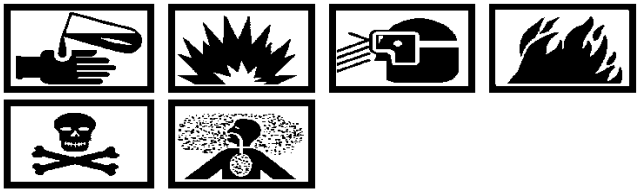

Sealing Compound Permatex No. 1372 or Loctite 30558 **34**

CAUTION

Do not use Permatex Sealant on the threads or lands of the retaining bolts (10, figure 1). Permatex Sealant goes under the heads of the retaining bolts (10) only. Do not use Permatex Sealant under the nose bearing thrust plate (8). Do not use 3M–EC–776 as sealing compound on reduction gear.

g. Apply a thin film of Permatex 1372 sealant under heads of retaining bolts (10) and apply grease to rubber lands of the retaining bolts (10). Secure nose bearing thrust plate (8) and preformed packing (9) by installing the eight retaining bolts (10) through the nose bearing thrust plate (8) and into the reduction gear.

h. Torque the retaining bolts (10) to 50 to 75 lb in., sequence 180 degrees apart; loosen, then 90 to 100 lb. in. using same sequence. (QA)

i. Lockwire retaining bolts (10). (QA)

General Purpose Aircraft Grease MIL–PRF–81322 **37**

j. Lubricate the outer diameter (OD) and inner diameter (ID) of the propeller shaft oil seal (7).

k. Carefully place the propeller shaft oil seal (7) over the propeller shaft and push it over the propeller shaft thrust bearing seal expander tool as far as possible.

l. Align the 0.281 inch "anti–rotation tang" on the propeller shaft oil seal (7) with the rounded slot on the nose bearing thrust plate (8). (QA)

m. Thoroughly clean the threads of the propeller shaft.

General Purpose Aircraft Grease MIL–PRF–81322 **37**

n. Lubricate the threads of the propeller shaft.

CAUTION

The propeller shaft seal installation fixture mating surface may be damaged if misused or improperly stored.

o. Carefully place the propeller shaft seal installation fixture on the end of the propeller shaft. Align the brass dowel pin in the outer sleeve of the fixture with a groove of the propeller shaft splines. Slide the fixture onto the propeller shaft. Seat the propeller shaft oil seal (7) by rotating the installation fixture clockwise until the fixture is flush with the nose bearing thrust plate (8).

p. Remove the propeller shaft seal installation fixture.

q. Ensure the propeller shaft oil seal (7) is evenly installed aft of the retaining ring groove in the nose bearing thrust plate (8). If the propeller shaft oil seal (7) is not installed evenly remove the propeller shaft oil seal (7) using the propeller shaft seal puller and repeat steps j through p. above.

r. Install the internal retaining ring (6) into the nose bearing thrust plate (8) inner diameter groove.

s. Remove the propeller shaft thrust bearing seal expander tool.

NOTE

The cuplock may be reused if it is not torn and if two previously undimpled areas can be aligned with two scallops (180 degrees apart) in the propeller shaft thrust nut lock (4).

General Purpose Aircraft Grease
MIL–PRF–81322 **37**

t. Apply grease to propeller shaft thrust bearing nut (5) and install the propeller shaft thrust nut lock cuplock. Make sure that the cuplock is installed aft of the nose bearing thrust nut lock (4) splines. One edge of the cuplock vertical flange fits into a groove behind the external splines of the thrust nut (5).

CAUTION

The propeller retaining nut may lose torque if the propeller shaft thrust nut lock (4) is not properly installed.

Do not force seating of the propeller shaft thrust nut lock (4), but rotate until splines mate and propeller shaft thrust nut lock pushes into place.

u. Place spline – propeller shaft thrust nut lock (4) into position making sure it is installed properly with full spline engagement. The face of the propeller shaft thrust nut lock (4) should be flush with the edge of the cuplock when it is installed correctly. (Figure 5)

v. When propeller shaft thrust nut lock (4, Figure 14) is properly seated, carefully use a spherical end punch and deform cuplock into the dimples on the front outer diameter of the nose bearing thrust nut lock (4) in two places 180 degrees apart. (QA)

INTERMEDIATE MAINTENANCE

REMOVAL AND INSTALLATION

PROPELLER SHAFT PLUG

Reference Material

None

Alphabetical Index

Subject Page No.

Installation 2
Removal 2

Record of Applicable Technical Directives

Type/No.	Date	Title and ECP No.	Date Inc.	Remarks
PPC 121	03 Mar 04	Redesigned Propeller Shaft Plug Installation (ECP–2129R)	15 Jul 04	None

1. **REMOVAL.**

Support Equipment Required

Part No./Type Designation	Nomenclature
6796467	Puller, propeller shaft plug
23068568	Puller, propeller shaft plug

a. Remove retaining ring (1, figure 1) from inside propeller shaft.

b. Install 6796467 or 23068568 propeller shaft plug puller and remove plug (3) from shaft. (See figure 2.)

NOTE

The propeller shaft plug puller threads in and shoulders on forward side of propeller shaft plug. Use slide hammer to remove plug.

c. Remove and discard preformed packing (2) from plug.

2. **INSTALLATION.**

Support Equipment Required

Part No./Type Designation	Nomenclature
6796467	Puller, propeller shaft plug
23068568	Puller, propeller shaft plug

Materials Required

Specification No./Part No.	Nomenclature
AS 3085–235	Packing
MIL–PRF–23699	Oil, lubricating

Lubricating Oil, MIL–PRF–23699 **2**

a. Apply a light coat of MIL–PRF–23699 lubricating oil to new preformed packing (2) and mating diameters. Install on plug (3).

b. Clean inside of propeller shaft with clean lint free cloth. Apply light coat of MIL–PRF–23699 on inside of propeller shaft.

c. Install plug inside front end of propeller shaft with a drift, or 6796467 propeller shaft plug puller.

d. Install retaining ring (1) in groove to retain plug in shaft.

e. If installing new plug 23073304 then new puller 23068568 should be used and the new plug should be installed (convex side inward).

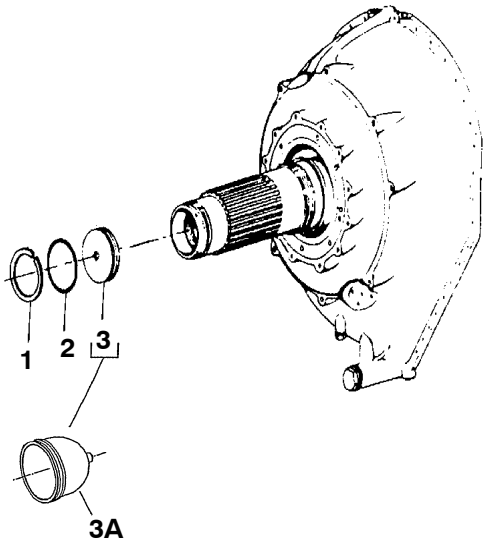

1. Retaining Ring
2. Preformed Packing
3. Plug
3A. Plug

Figure 1. Reduction Gear Prop Shaft Plug Details

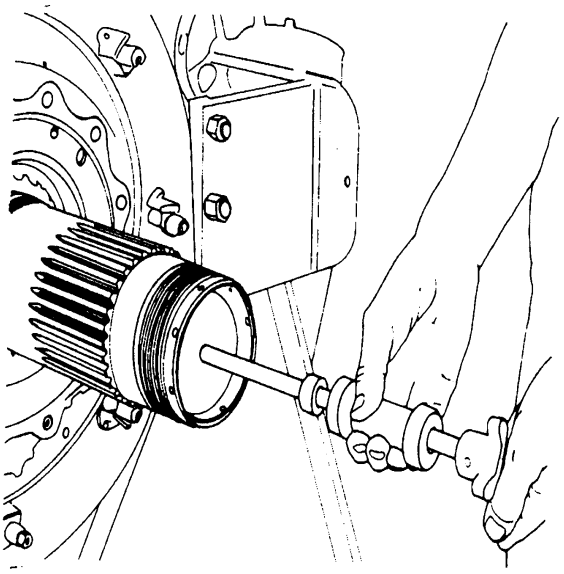

Figure 2. Removing Propeller Shaft Plug with 6796467 or 23068568 Puller

INTERMEDIATE MAINTENANCE

REMOVAL AND INSTALLATION

THRUST SENSITIVE SIGNAL (TSS) SYSTEM ACTUATOR

Reference Material

Thrust Sensitive Switch . . . . . WP 080 00

Alphabetical Index

Subject Page No.

Installation 2

Removal 2

Record of Applicable Technical Directives

None

1. **REMOVAL.**

Support Equipment Required

Part No./Type Designation	Nomenclature
6796828	Compressor, thrust signal plunger spring

a. Remove thrust sensitive switch from reduction gear assembly. Refer to WP 080 00.

b. Install 6796828 thrust signal plunger spring compressor (figure 1) on thrust sensitive switch pad. Compress spring (1, figure 2) and remove retaining ring (2).

c. Turn plunger spring compressor until spring tension is released, then remove spring compressor.

d. Remove preformed packing (3), plunger bushing (4), spring (1), plunger (5) and bushing (6). Discard preformed packing.

e. Remove and discard preformed packing (7).

2. **INSTALLATION.**

Support Equipment Required

Part No./Type Designation	Nomenclature
6796828	Compressor, thrust signal plunger spring

Materials Required

Specification No./Part No.	Nomenclature
AS3085–010	Packing, preformed
AS3085–114	Packing, preformed

NOTE

Nominal plunger length is 5.960 inches.

a. Install preformed packings (3 and 7) on plunger bushing (4) and plunger (5).

b. Install bushing (6) in thrust sensitive switch pad opening with two holes to outside.

c. Install spring (1) on plunger (5), insert plunger and spring into bushing.

d. Install plunger bushing (4) over plunger.

e. Install 6796828 thrust sensitive switch plunger spring compressor on pad. Compress spring and install retaining ring (2) with pliers on tool.

f. Turn plunger spring compressor until spring tension is released. Remove spring compressor tool.

g. Inspect plunger height above switch pad for minimum height of 1.2465 inches, maximum height of 1.3246 inches.

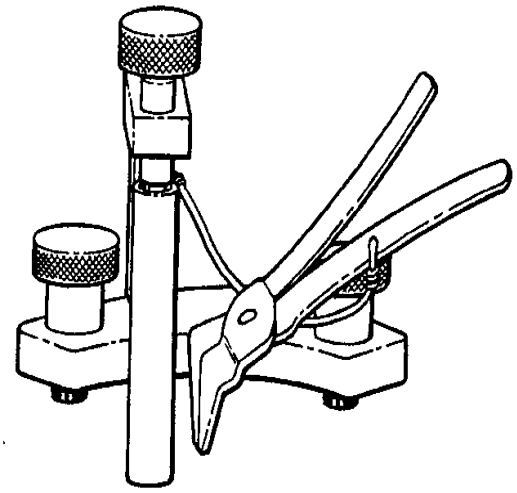

Figure 1. Thrust Signal Plunger Spring Compressor No. 6796828

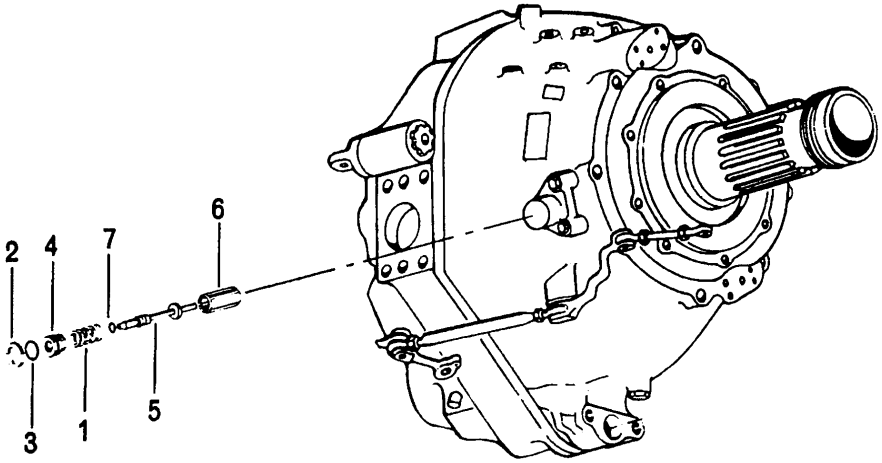

1. Spring
2. Retaining Ring
3. Preformed Packing
4. Plunger Bushing
5. Plunger
6. Bushing
7. Preformed Packing

Figure 2. Thrust Sensitive Signal Actuator Details

INTERMEDIATE MAINTENANCE

MAINTENANCE

REDUCTION GEAR HOUSING PLUGS AND PRESSURE RELIEF VALVE

Reference Material

Reduction Gear Drain Plug Insert Replacement . . . . . WP 032 00
Reduction Gear Parts Clean, Inspect, Repair and Replace . . . . . WP 039 00
Reduction Gear Magnetic Plug . . . . . WP 072 00

Alphabetical Index

Subject Page No.
Cleaning 2
Inspection 2
Installation 3
Removal 2
Repair 3

Record of Applicable Technical Directives

None

1. **REMOVAL.**

Support Equipment Required

Part No./Type Designation	Nomenclature
6796735	Wrench, spanner, oil screen

a. Remove lockwire from plugs (1, 6, 8, 10, 12, 14, 16, 19, 24, 28, figure 1).

b. Remove drain plug (1) and gasket (2).

c. Remove two bolts (3), flanged screw bushing (4) and preformed packing (5).

d. Remove plug (6) and preformed packing (7).

NOTE

Plug (8) and preformed packing (9) are not used when hole is omitted from rear case.

e. Remove plug (8) and preformed packing (9).

f. Remove plug (10) and preformed packing (11).

NOTE

Plug (12) and preformed packing (13) are not used when hole is omitted from rear case.

g. Remove plug (12) and preformed packing (13).

NOTE

Plug (14) and preformed packing (15) are not used when hole is omitted from rear case.

h. Remove drain plug (14) and preformed packing (15).

i. Remove three plugs (16) and three preformed packings (17).

NOTE

Nut (18), plug (19), and packing seal (20) are not used when hole is omitted from rear case.

j. Remove nut (18), plug (19), and packing seal (20).

k. Remove lockwire, valve (21) preformed packing (22) and gasket (23).

l. Remove plug (24) from bushing (26).

m. Remove preformed packing (25) from plug (24).

n. Remove reducer bushing (26) and preformed packing (27).

o. Remove magnetic plug (28) and gasket (29).

p. Remove scavenge oil screen (30) using 6796735 oil screen spanner wrench. (See figure 2.)

2. **CLEANING.**

Materials Required

Specification No./Part No.	Nomenclature
TT–T–291	Thinner, paint, mineral spirits

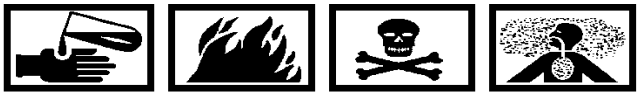

Paint Thinner TT–T–291 **4**

a. Clean screen (30, figure 1) with TT–T–291 mineral spirits.

b. Dry screen with compressed air.

3. **INSPECTION.**

a. Inspect plugs and plug holes for corrosion, cracks, and damaged threads. Refer to WP 039 00.

b. Inspect plug insert at plug (1, figure 1) for damage.

c. Refer to WP 032 00 for replacement of inserts.

d. Inspect magnetic plug (28) per WP 072 00.

4. **REPAIR.**

a. No repair permitted, except for replacement of inserts. Refer to WP 032 00.

5. **INSTALLATION.**

Support Equipment Required

Part No./Type Designation	Nomenclature
6796735	Wrench, spanner, oil screen
–––	Wrench, torque (0–100 lb in.)
–––	Wrench, torque (0–500 lb in.)

Materials Required

Specification No./Part No.	Nomenclature
AN123029	Gasket
AN123033	Gasket
AS3208–06	Packing, preformed
AS3084–08	Packing
AS3085–016	Packing
AS3085–122	Packing
MIL–PRF–23699	Oil, lubricating
MS20995C32	Lockwire, 0.032 inch
6843332–04	Packing, performed (5)

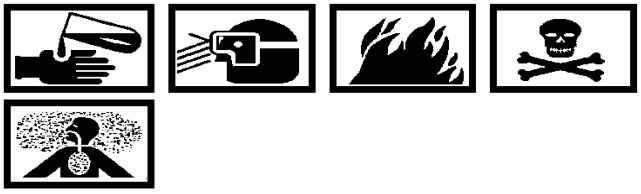

Lubricating Oil, MIL–PRF–23699 2

NOTE

MIL–PRF–23699 engine oil is to be applied to threads of plugs and preformed packings before installation.

a. Install preformed packing (5, figure 1) in place on front housing.

b. Install flanged screw bushing (4) and secure with two bolts (3).

c. Torque bolts to 400–465 lb in. (QA)

d. Install gasket (2) on plug (1), and install plug into insert.

e. Torque plug to 240–300 lb in. and lockwire to bolts (3) with 0.032 in. lockwire. (QA)

f. Install preformed packing (7) on plug (6) and install plug in front housing.

g. Torque plug to 240–300 lb in. and secure with 0.032 in. lockwire. (QA)

NOTE

Plug (8) and preformed packing (9) are not used when hole is omitted from rear case.

h. Install preformed packing (9) on plug (8). Install plug on rear housing.

i. Torque plug to 240–300 lb in. (QA)

j. Install preformed packing (11) on plug (10), and install plug.

k. Torque plug to 40–65 lb in. (QA)

NOTE

Plug (12) and preformed packing (13) are not used when hole is omitted from rear case.

l. Install preformed packing (13) on oil return plug (12), and install plug in rear housing.

NOTE

Plug (14) and preformed packing (15) are not used when hole is omitted from rear case.

m. Install preformed packing (15) on drain plug (14), and install plug into rear housing.

n. Torque plug to 240–300 lb in. (QA)

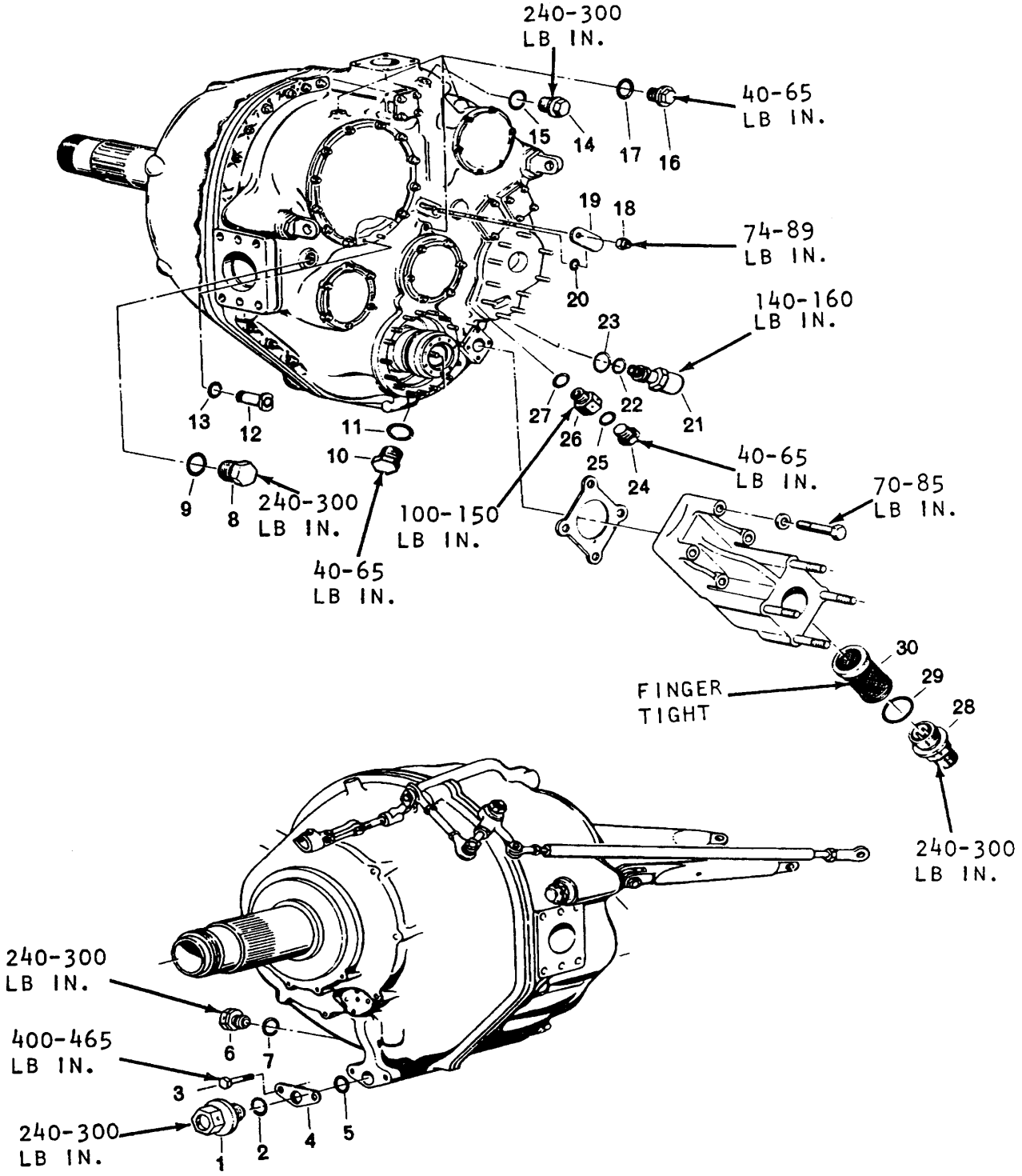

Figure 1. Reduction Gear Plugs (Sheet 1 of 2)

1. Drilled Hex Head Drain Plug
2. Gasket
3. Drilled Hex Head Machine Bolt
4. Flanged Screw Bushing
5. Preformed Packing
6. 3/4–16 Plug
7. Preformed Packing
8. Plug
9. Preformed Packing
10. Plug (3)
11. Preformed Packing (3)
12. Oil, Return Plug
13. Preformed Packing
14. Drain Plug
15. Preformed Packing
16. Plug (3)
17. Preformed Packing (3)
18. Nut
19. Plug
20. Packing Seal
21. Oil Pressure Relief Valve
22. Preformed Packing
23. Gasket
24. Plug
25. Preformed Packing
26. Screw Thread Reducer Bushing
27. Preformed Packing
28. Magnetic Plug
29. Gasket
30. Scavenge Oil Screen Assembly

Figure 1. Reduction Gear Plugs (Sheet 2)

o. Install three preformed packings (17) on three plugs (16), and install plugs.

p. Torque plugs to 40–65 lb in. (QA)

NOTE

Nut (18), plug (19), and packing seal (20) are not used when hole is omitted from rear case.

q. Install packing seal (20) on rear housing.

r. Install alternator drive oil outlet plug (19) over seal (20) and secure with nut (18).

s. Torque nut to 74–89 lb in. (QA)

t. Install preformed packing (27) on reducer bushing (26), and install reducer bushing on rear housing.

u. Torque bushing to 100–150 lb in. (QA)

v. Install preformed packing (25) on plug (24), and install plug into reducer bushing (26).

w. Torque plug to 40–65 lb in. and secure with 0.032 in. lockwire to oil pressure relief valve after it is installed. (QA)

x. Install preformed packing (22) and gasket (23) on oil pressure relief valve (21), and install valve on rear housing.

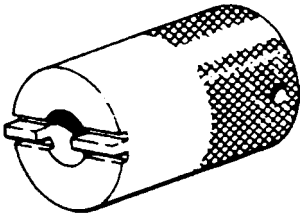

Figure 2. 6796735 Oil Screen Spanner Wrench

y. Torque valve to 140–160 lb in. and secure valve with 0.032 in. lockwire. (QA)

z. Install scavenge oil screen (30) in scavenge outlet using 6796735 oil screen spanner wrench. (See figure 2.) Tighten screen finger tight.

aa. Install gasket (29) on magnetic plug (28), and install magnetic plug in scavenge outlet body.

ab. Torque plug to 240–300 lb in. and secure with 0.032 in. lockwire. (QA)

INTERMEDIATE MAINTENANCE

DISASSEMBLY

REDUCTION GEAR UNIT ASSEMBLY

Reference Material

Torquemeter Unit and Safety Coupling Assembly-Removal and Installation . . . . . WP 028 00
Reduction Gear Rear Housing Oil Seals-Replacement . . . . . WP 033 00
Thrust Sensitive Signal System Actuator-Removal and Installation . . . . . WP 036 00
Reduction Gear Housing Plugs and Oil Pressure Relief Valve Assembly-Maintenance . . . . . WP 037 00
Reduction Gear Unit Parts, Clean, Inspect, Repair, and Replacement . . . . . WP 039 00
Reduction Gear Oil Pump Assembly-Maintenance . . . . . WP 070 00
Reduction Gear Oil Filter Assembly-Maintenance . . . . . WP 071 00
Reduction Gear Magnetic Plug and Scavenge Oil Screen Assembly-Maintenance . . . . . WP 072 00
Reduction Gear External Oil Pressure Relief Valve Assembly-Maintenance . . . . . WP 074 00
Thrust Sensitive Switch Assembly-Maintenance . . . . . WP 080 00
Power Section Wiring Harness Assemblies-Removal and Installation . . . . . WP 081 00

Alphabetical Index

Subject Page No.
Alternator Drive Gear Assembly Removal 12
Cone Type Propeller Brake Assembly Removal 11
Generator Drive Shaft and Hydraulic Pump Drive Gear Alternate Removal 13
Hydraulic Pump Drive Idler Gear Alternate Removal 16
Hydraulic Pump Drive Shaft, Hydraulic Pump Drive Gear and Tachometer Drive Take-off Gear Removal 13
Hydraulic Pump Idler Gear Removal 16
Inspection 23
Installation of Reduction Gear Unit in Turnover Stand 2
Introduction 2
Loosening of Accessory Drive Spanner Nuts and Removal of Inner Diaphragm in Rear Housing 9
Main Diaphragm Removal and Disassembly 19

Alphabetical Index (Contd)

Subject	Page No.
Main Drive and Sun Gear Removal	19
Main Idler Gear Removal	10
Oil Pump Drive Idler Journal and Oil Pump Drive Idler Gear Removal	18
Oil Pump Drive Shaft and Oil Pump Drive Gear Removal	18
Oil Seals Removal	4
Parallel Rail Stand	2
Pinion Shaftgear Balance Assembly Removal	18
Propeller Shaft and Planetary Gear Assembly Removal and Disassembly	21
Propeller Shaft Plug Removal	18
Propeller Shaft Thrust Bearing Nut, Oil Seal, and Nose Bearing Thrust Plate Removal	18
Rear Housing Removal	4
Reduction Gear External Equipment Removal	4
Reduction Gear Scavenge Oil Pumps Disassembly	23
Struts and Eyebolts Removal	3
Tachometer Drive Idler Gear Removal	17
Tachometer Drive Shaft and Tachometer Drive Gear Removal	17
Torquemeter Unit Removal	4

Record of Applicable Technical Directives

None

1. INTRODUCTION.

2. This work package (WP) covers complete disassembly of the reduction gear unit.

NOTE

Reduction Gear Assemblies are identified with matched set serial numbers, (Set S/N) on the front housing, rear housing, main diaphragm and inner diaphragm.

3. Inspect Reduction Gear Assemblies magnetic chip detectors prior to disassembly IAW WP 072 00. Reduction Gear assemblies rejected IAW WP 072 00(or removed for metal in oil) shall be reworked at depot and have all bearings inspected IAW NAVAIR 02B-5DG-6-2 WP 138 00, shall have the RGA scavenge pumps inspected IAW NAVAIR 02B-5DG-6-2 WP 116 00, and shall have the main scavenge pump gears (P/N 6876478 and 6788225) inspected IAW 02B-5DG-6-2 WP 016 00 and WP 017 00.

4. PARALLEL RAIL STAND.

Support Equipment Required

Part No./Type Designation	Nomenclature
6796980	Adapter, rotating, engine components to parallel rails maintenance stand

a. The removal procedures in this WP may be accomplished with the reduction gear unit mounted in the parallel rail stand using 6796980 adapter (figure 1).

5. INSTALLATION OF REDUCTION GEAR UNIT IN TURNOVER STAND.

Support Equipment Required

Part No./Type Designation	Nomenclature
6795905	Stand, turnover
6796820	Adapter, attaching, reduction gear unit to 6799764 adapter
6796832	Stand, transportation and storage, reduction gear assembly
6797682	Adapter, lifting, reduction gear
6798160	Adapter, lifting, reduction gear
6799764	Adapter, attaching, engine component adapter.

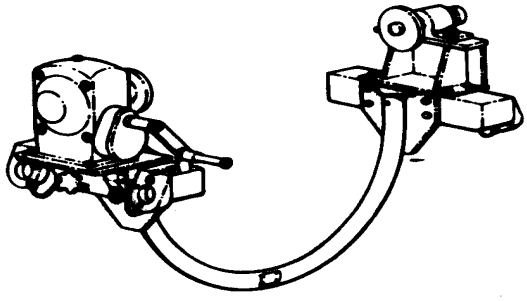

Figure 1. 6796980 Engine Component–to–Parallel Rail Rotating Adapter

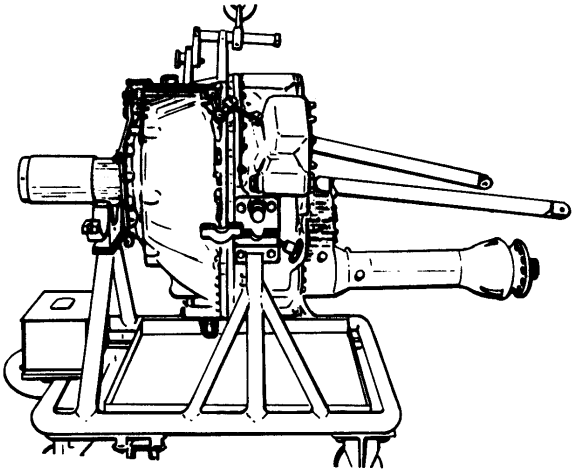

Figure 2. Removing Reduction Gear Assembly From 6796832 Transportation and Storage Stand Using 6798160 Lifting Adapter

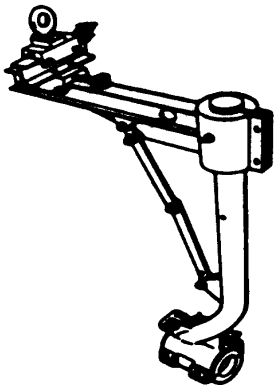

Figure 3. 6797682 Reduction Gear Assembly Lifting Adapter

a. Move the 6796832 transportation and storage stand (figure 2) to a hoist.

b. Attach 6798160 or 6797682 reduction gear lifting adapter on the reduction gear assembly (figures 2 and 3).

c. Attach a hoist and remove reduction gear assembly from the storage stand.

d. Remove storage stand adapter from the sides of the reduction gear assembly.

e. Remove thrust sensitive switch per WP 080 00. If planetary gear assembly is to be removed, remove thrust sensitive signal actuator per WP 036 00.

f. Install reduction gear in 6795905 turnover stand using 6799764 engine component adapter attaching adapter and 6796820 attaching adapter (figure 4).

6. <u>STRUTS AND EYEBOLTS REMOVAL</u>.

Support Equipment Required

Part No./Type Designation	Nomenclature
6796059	Wrench, reduction gear eyebolt nut

a. Remove cotter pin (7, figure 5) and nut (6) from eyebolt pin (5). (Eyebolt pin is serrated.)

b. Remove eyebolt pin (5) and detach strut (1).

c. Remove cotter pin (11) from spanner nut (10) and eyebolt (8).

d. Install 6796059 eyebolt nut wrench (figure 6) on spanner nut (10, figure 5).

e. Remove spanner nut (10) and beveled washer (9) from eyebolt (8).

f. Remove eyebolt (8) from reduction gear rear housing.

7. TORQUEMETER UNIT REMOVAL.

a. Remove torquemeter unit. Refer to WP 028 00.

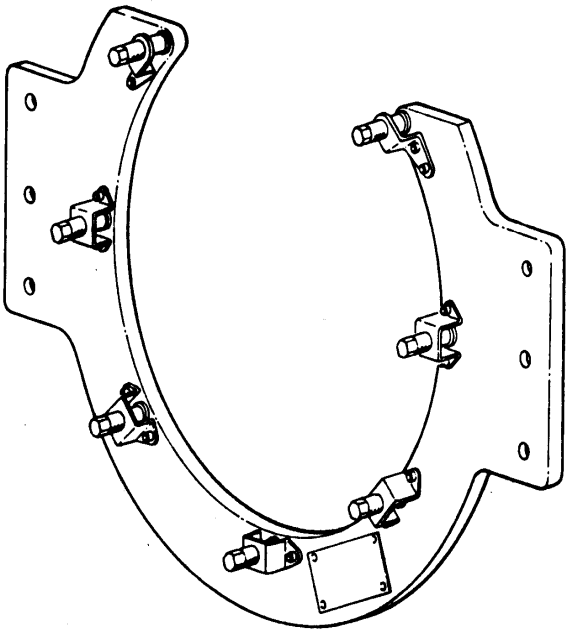

Figure 4. 6796820 Reduction Gear Unit–to–6799764 Adapter Attaching Adapter

8. REDUCTION GEAR EXTERNAL EQUIPMENT REMOVAL.

a. Drain the oil and inspect screen/filter and magnetic plug for particles. Refer to WP 037 00, 071 00, and 072 00.

b. Remove magnetic plug scavenge outlet body assembly. Refer to WP 072 00.

c. Remove reduction gear oil pump. Refer to WP 070 00.

d. Remove external oil pressure relief valve. Refer to WP 074 00.

e. Remove reduction gear plugs. Refer to WP 037 00.

f. Remove electrical equipment. Refer to WP 080 00.

g. Remove two bolts (1, figure 7) and lift intermediate prop control bellcrank and lever shaft assembly (4) from reduction gear mounting pad (6). Remove propeller control shaft gasket (5). Remove prop control linkage assembly by disengaging forward propeller control shaft and arm assembly (7) from propeller control shaft pivot bolt and bearing assembly (3).

h. Remove accelerometer from bracket at 9 o'clock position. Remove bracket.

9. OIL SEALS REMOVAL.

a. Remove oil seals. Refer to WP 033 00.

10. REAR HOUSING REMOVAL.

Support Equipment Required

Part No./Type Designation	Nomenclature
3718	Puller, splitline bolt
3738	Holder, starter shaft
6796987	Stand, turnover
6797706	Adapter, trunnion
6799764	Adapter, attaching, engine component adapter
6799782	Adapter, rear housing lifting

NOTE

Reduction Gear Assemblies are identified with matched set serial numbers, (Set S/N) on the front housing, rear housing, main diaphragm and inner diaphragm.

a. Turn the reduction gear assembly in the stand with the rear end up.

b. Remove the rear housing splitline mounting nuts, washers, and bolts.

c. Using a soft drift and plastic mallet tap bolts out sufficiently to allow installation of 3718 bolt puller (figure 8). Remove bolts using puller.

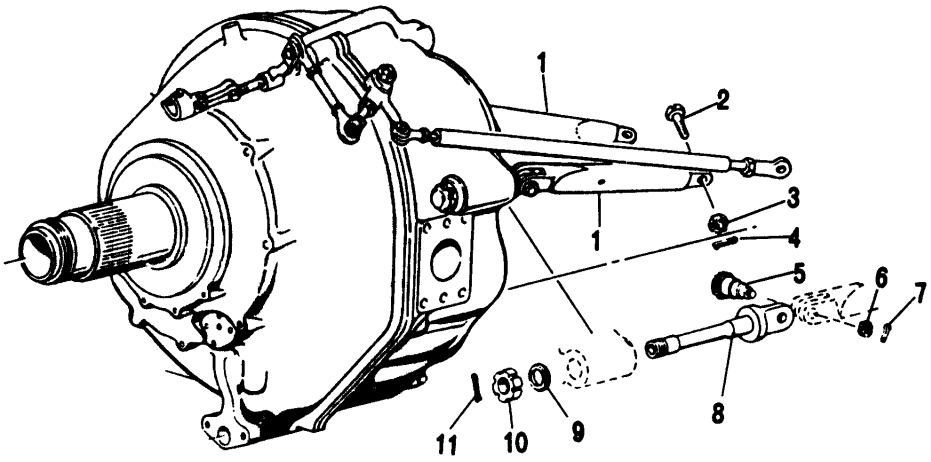

1. Strut
2. Clevis Bolt
3. Shear Nut
4. Cotter Pin
5. Eyebolt Pin
6. Nut
7. Cotter Pin
8. Eyebolt
9. Beveled Washer
10. Spanner Nut
11. Cotter Pin

Figure 5. Reduction Gear Struts and Eyebolt Details

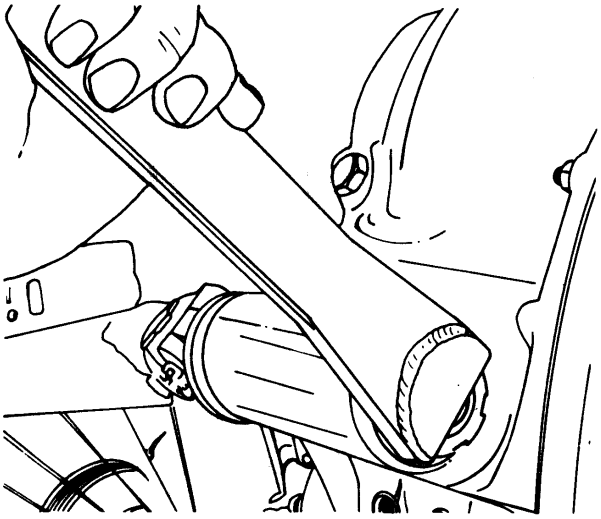

Figure 6. No. 6796059 Reduction Gear Eyebolt Nut Wrench

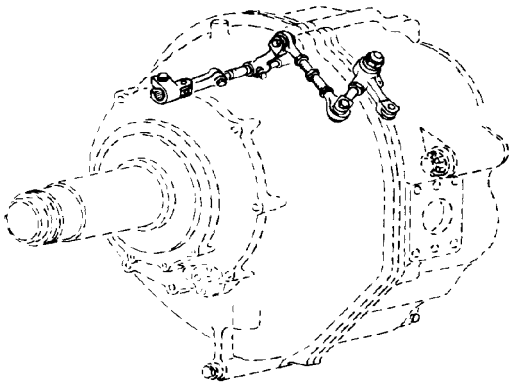

1. Bolt (2)
2. Reduction Gear Front Housing
3. Propeller Control Shaft Pivot Bolt & Bearing Assembly
4. Intermediate Propeller Control Bellcrank and Lever Shaft Assembly
5. Propeller Control Shaft Gasket
6. Reduction Gear Mounting Pad
7. Forward Propeller Control Shaft and Arm Assembly

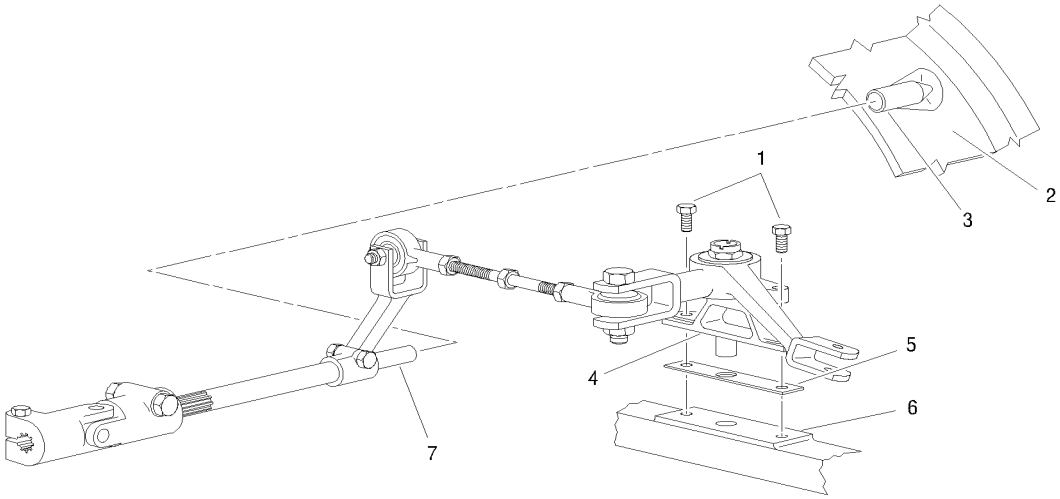

Figure 7. Propeller Control Linkage

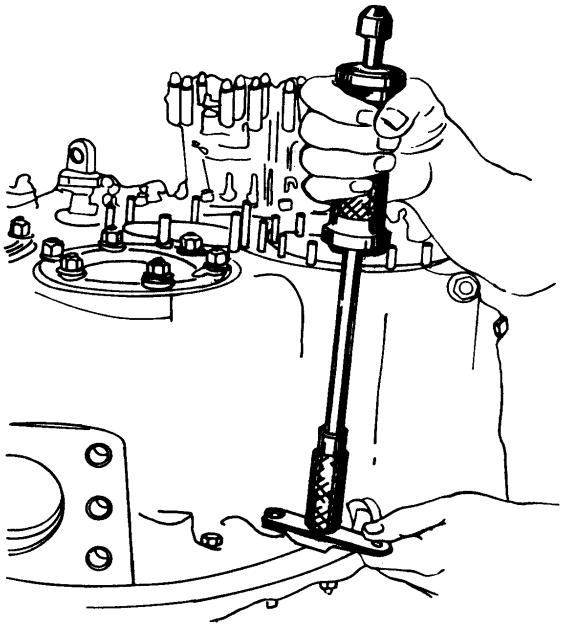

Figure 8. Removing Rear Housing Splitline Bolt Using 3718 Puller

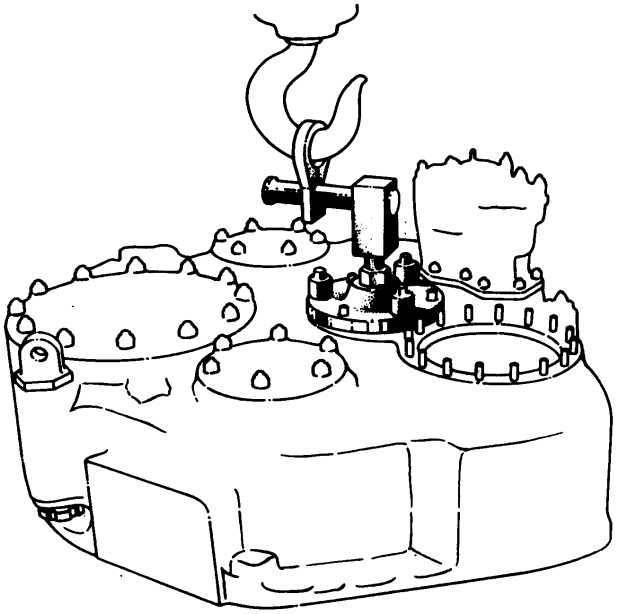

Figure 9. Handling Rear Housing Using 6799782 Lifting Adapter

d. Install 6799782 rear housing lifting adapter on rear housing starter pad (figure 9).

NOTE

When the rear housing does not separate from front housing and main diaphragm, remove the 0.250–28 socket head set screws from the jack screw openings. Insert jack screws in the openings and separate the rear housing. Remove the jack screws.

A soft fiber drift may be used, if required, to prevent the pinion gear rear bearing outer ring and rollers from “hanging up” in the rear housing when removing the rear housing assembly.

e. Attach hoist and remove rear housing from reduction gear unit.

f. Install 6797706 trunnion adapter (figure 10) on 6796987 turnover stand (figure 11).

g. Install 6799764 engine component adapter attaching adapter (figure 12) to 6797706 trunion adapter.

h. Install rear housing in turnover stand.

i. Remove preformed packings (7 and 8, figure 13) from rear housing–to–diaphragm splitline and rear housing. Discard packings.

j. Remove rear housing lifting adapter.

k. Install 3738 starter shaft holder (figure 14).

l. Position assembly front end up in turnover stand.

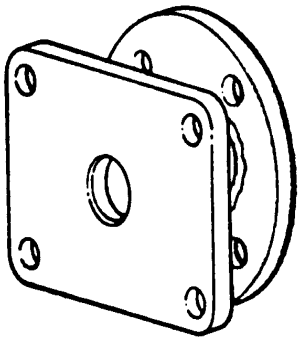

Figure 10. 6797706 Reduction Gear Trunnion Adapter

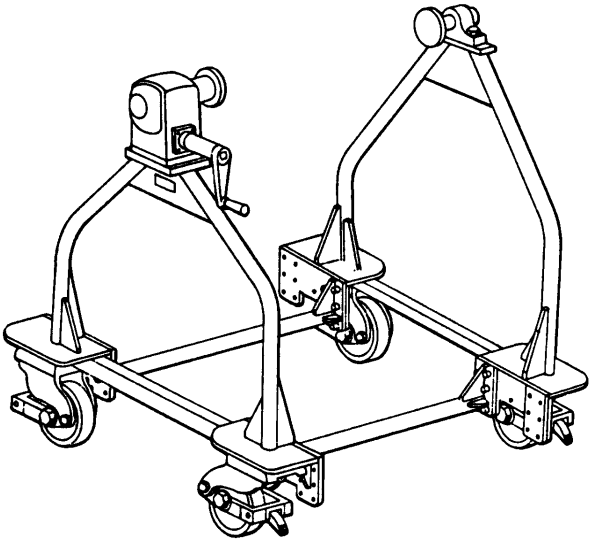

Figure 11. 6796987 Turnover Stand

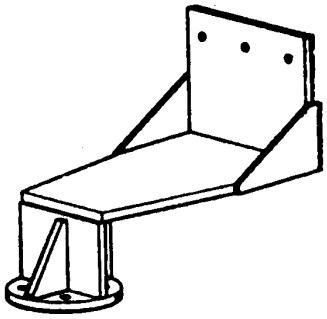

Figure 12. 6799764 Engine Component Adapter Attaching Adapter

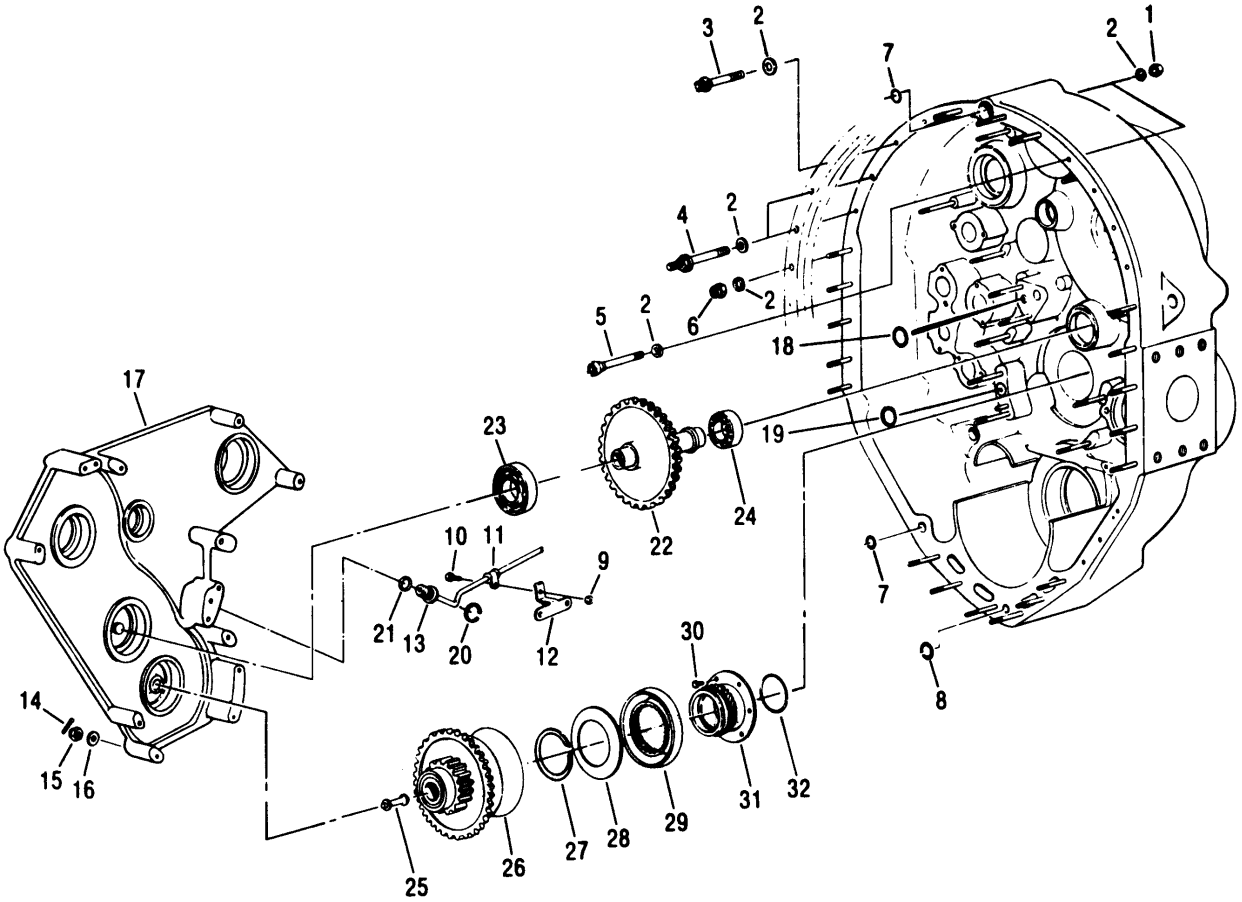

1. Nut
2. Washer
3. Bolt
4. Stud
5. Bearing and Bolt Assembly
6. Nut
7. Preformed Packing
8. Preformed Packing
9. Nut
10. Bolt
11. Clamp
12. Bracket
13. Tachometer Bearing Oil Tube
14. Cotter Pin
15. Nut
16. Washer
17. Inner Diaphragm
18. Preformed Packing
19. Washer Seal
20. Retaining Ring
21. Preformed Packing
22. Main Idler Gear
23. Bearing
24. Bearing
25. Propeller Brake OIl Tube
26. Balanced Propeller Brake Assembly
27. External Retaining Ring
28. Propeller Brake Release Spring
29. Propeller Brake Inner Cone
30. Bolt
31. Starter Shaft Bearing Flange
32. Preformed Packing

Figure 13. Inner Diaphragm, Main Idler Gear, and Cone Type Propeller Brake Assembly Removal

11. LOOSENING OF ACCESSORY DRIVE SPANNER NUTS AND REMOVAL OF INNER DIAPHRAGM IN REAR HOUSING.

Support Equipment Required

Part No./Type Designation	Nomenclature
3738	Holder, starter shaft
6795894	Wrench, spanner, end slot spanner nut
6796521	Puller, starter idler gear rear bearing outer ring
6796522	Puller, starter idler gear front bearing outer ring
6796599	Wrench, spanner, generator idler bearing spindle nut
6799535	Wrench, spanner end slot spanner nut

NOTE

Reduction Gear Assemblies are identified with matched set serial numbers, (Set S/N) on the front housing, rear housing, main diaphragm and inner diaphragm.

a. Install 3738 starter shaft holder (figure 14) on starter pad.

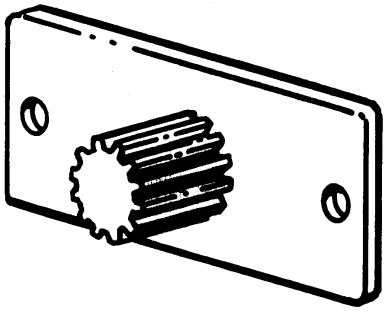

Figure 14. 3738 Starter Shaft Holder

NOTE

The alternator drive shaft gear assembly is retained by the inner diaphragm assembly.

b. Loosen following shaft spanner nuts using 6795894 wrench. Do not attempt to straighten dimples, wrench action will push dimple outward and clear of nut scallop.

(1) Hydraulic pump drive shaft nut (50).

(2) Generator drive shaft nut (36) (hydraulic pump drive gear alternate pad).

c. Remove nut (9, figure 13) and bolt (10) from clamp (11) and bracket (12). Move or turn tachometer bearing oil tube (13) from its location over the journals. (Do not bend tube.)

CAUTION

Do not attempt to straighten dimple prior to cup washer removal. Cup washer dimples are removed by the end slot spanner nut wrench when loosening nut.

d. Loosen spanner nuts, using 6799535 wrench (figure 16), at following locations. Do not attempt to straighten dimples, wrench action will push dimple outward and clear of nut scallop.

(1) Tachometer drive shafts (2 places) (62, figure 24).

(2) Oil pump drive idler journal (74).

(3) Oil pump drive shaft (85).

CAUTION

Be sure no cotter pins, nuts, or washers removed from inner diaphragm are dropped into or left in the rear housing.

e. Remove cotter pins (14, figure 13), nuts (15), and washers (16) securing inner diaphragm (17). Discard cotter pins.

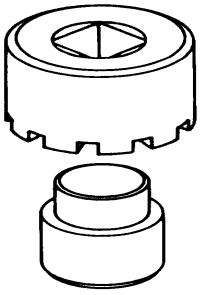

Figure 15. 6795894 End Slot Spanner Nut Spanner Wrench

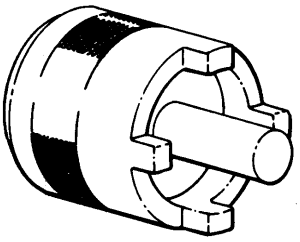

Figure 16. 6799535 End Slot Spanner Nut (9/16) Spanner Wrench

CAUTION

Do not turn rear housing over in the stand with inner diaphragm removed. Loose details may fall from housing.

f. Remove inner diaphragm from the rear housing (figure 17).

g. Remove preformed packing (18, figure 13) and washer seal (19). Discard packing and seal.

h. Remove retaining ring (20) from inner diaphragm and tachometer bearing oil tube assembly (13).

i. Remove tachometer bearing oil tube (13) from the diaphragm.

j. Remove preformed packing (21) from oil tube. Discard packing.

k. Loosen spanner (spindle) nut (19, figure 24) on hydraulic pump drive idler gear alternate using 6796599 wrench (figure 18).

l. Use a soft drift or 6796522 bearing outer ring puller (figure 19) remove outer rings from inner diaphragm at three locations: starter shaft, alternator drive gear, and the hydraulic pump drive gear.

m. Install 6796522 bearing outer ring puller (figure 19) on inner diaphragm at main idler gear opening and pull outer ring.

n. Install 6796521 bearing outer ring puller (figure 20) on inner diaphragm at hydraulic pump idler gear opening and pull outer ring.

12. MAIN IDLER GEAR REMOVAL.

Support Equipment Required

Part No./Type Designation	Nomenclature
6796250	Support, bearing removal
6796521	Puller, bearing outer ring
6799791	Plate, puller, main idler gear rear bearing
6799792	Plate, puller, main idler gear front bearing
6799793	Drift

a. Remove main idler gear (22, figure 13) and bearings (23 and 24).

NOTE

Do not remove bearings from the shaft or gear assemblies unless inspection is necessary.

b. Install 6796250, bearing removal support (figure 21) on an arbor press.

c. Use 6799793 drift and 6799792 and 6799791 bearing puller plates (figure 22), remove the front and rear bearings from the main idler gear.

d. Install 6796521 bearing outer ring puller (figure 20) on opening of main idler gear rear bearing and remove rear bearing outer ring from rear housing.

e. Inspect bearing cages. Refer to WP 039 00.

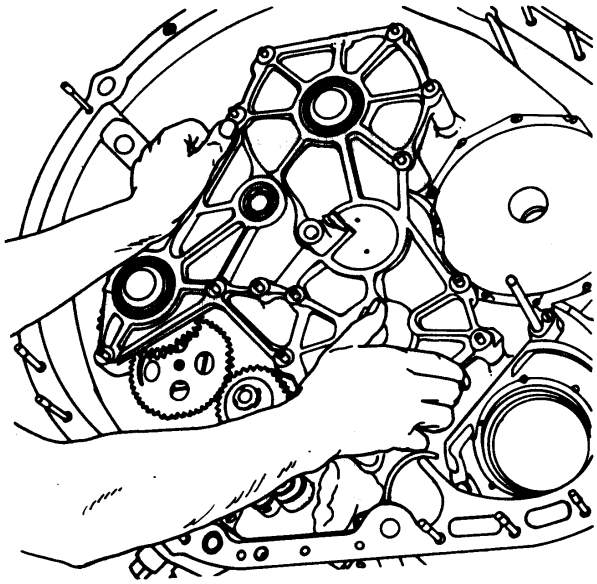

Figure 17. Removing Inner Diaphragm

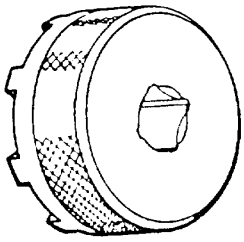

Figure 18. 6796599 Generator Idler Bearing Spindle Nut Spanner Wrench

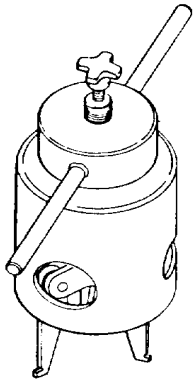

Figure 19. 6796522 Bearing Outer Ring Puller

13. CONE TYPE PROPELLER BRAKE ASSEMBLY REMOVAL.

Support Equipment Required

Part No./Type Designation	Nomenclature
3738	Holder, starter shaft
6796221	Pusher, starter shaft bearing cage

CAUTION

The balanced propeller brake assembly (26, figure 13) is a matched serialized set and shall not be disassembled. If disassembled, the assembly shall be replaced.

The starter shaft bearing flange (31), propeller brake inner cone (29), and propeller brake release spring (28) are also a matched serialized set. Do not intermix these parts with like parts between sets. These parts are replaced in sets only.

a. Remove 3738 starter shaft holder (figure 14).

b. Remove oil tube (25, figure 13) from balanced propeller brake assembly (26).

c. Remove balanced propeller brake assembly (26) from rear housing.

d. Remove rear bearing outer ring from starter shaft bearing flange, (31).

e. Install outer ring over inner ring and rollers on balanced propeller brake assembly.

CAUTION

Do not turn rear housing over in the stand with the inner diaphragm removed.

f. Remove external retaining ring (27).

g. Remove release spring (28).

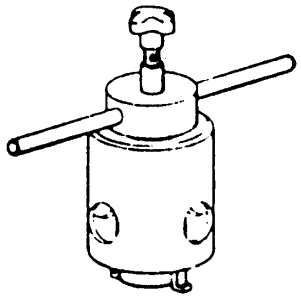

Figure 20. 6796521 Bearing Outer Ring Puller

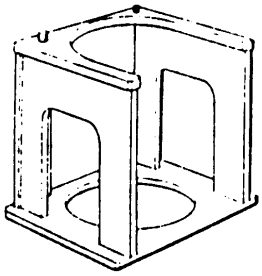

Figure 21. 6796250 Bearing Removal Support

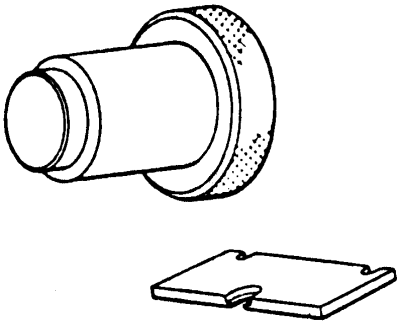

Figure 22. 6799793 Drift and 6796214, 6799791 or 6799792 Bearing Puller Plates

h. Remove inner cone (29) from starter shaft bearing flange (31).

i. Remove lockwire and bolts (30) from starter shaft bearing flange (31).

j. Remove starter shaft bearing flange (31) from rear housing using 6796221 starter shaft pusher (figure 23). Refer to WP 033 00 for removal of seal.

k. Remove preformed packing (32, figure 13) from the rear housing. Discard packing.

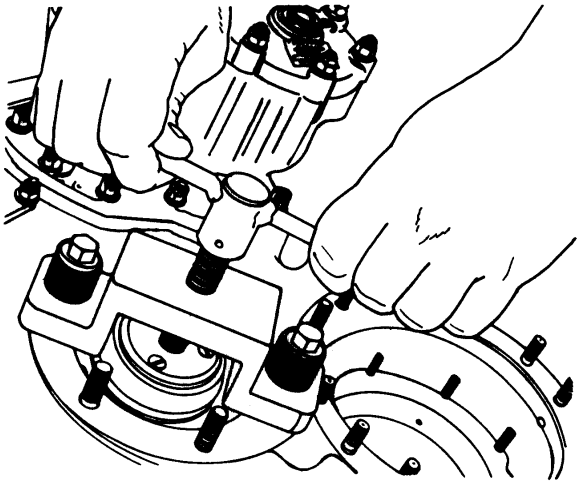

Figure 23. Removing Starter Bearing Flange Using 6796221 Pusher

14. <u>ALTERNATOR DRIVE GEAR ASSEMBLY REMOVAL</u>.

Support Equipment Required

Part No./Type Designation	Nomenclature
23034229	Plate, puller, bearing inner ring
6796250	Support, bearing removal
6796525	Drift, bearing inner ring

a. Remove alternator drive gear assembly (2, figure 24) and bearings (10) from rear housing.

b. Remove outer rings and rollers of bearings.

c. Assemble 23034229 inner ring puller plate (figure 25) and 6796250 bearing removal support (figure 21). Install assembly on an arbor press.

d. Using 6796525 inner ring drift (figure 26) remove bearing inner rings.

NOTE

No further disassembly is permitted. The alternator shaftgear and hydraulic pump drive gear assembly is a matched set (by serial number) and bolts are swaged.

e. Inspect bearing cage. Refer to WP 039 00.

15. GENERATOR DRIVE SHAFT AND HYDRAULIC PUMP DRIVE GEAR ALTERNATE REMOVAL.

Support Equipment Required

Part No./Type Designation	Nomenclature
23034229	Plate, puller, bearing inner ring
6795894	Wrench, spanner, end slot spanner nut
6796250	Support, bearing removal
6796525	Drift, bearing inner ring
6796526	Plate, support, bearing cage
6796527	Drift, bearing outer ring

a. Using end slot spanner nut wrench 6795894, remove spanner nut (26, figure 24) and cup washer (27). Retain cup washer for reuse. Remove hydraulic pump drive gear alternate (28) from generator drive shaft (29).

b. Remove four bolts (30) and lift bearing cage (31) and generator drive shaft assembly from rear housing.

c. Remove internal retaining ring (32).

NOTE

Rear bearing outer ring will stay in the bearing cage, the remaining bearing components and spacer will stay on the shaft when shaft is removed from the cage.

d. Install 6796250 bearing removal support on an arbor press and with 6797526 bearing cage support plate (figure 27) remove shaft (29, figure 24) from bearing cage (31).

e. Using 23034229 inner ring puller plate (figure 25) and 6796525 inner ring drift (figure 26), press bearings (34, figure 24) towards external spline end of shaft to clear external retaining split ring (33). Remove ring.

f. Install 23034229 puller plate between splined end of shaft and front bearing. Remove bearings (34) and spacer (35).

(1) Remove split ring (33).

g. Using 6796527 bearing outer ring drift (figure 27) to remove rear bearing outer ring from the bearing cage.

16. HYDRAULIC PUMP DRIVE SHAFT, DRIVE GEAR AND TACHOMETER DRIVE TAKE–OFF GEAR REMOVAL.

Support Equipment Required

Part No./Type Designation	Nomenclature
23034229	Plate, puller, bearing inner ring
6795894	Wrench, spanner, end slot spanner nut
6796250	Support, bearing removal
6796525	Drift, bearing inner ring

a. Using end slot spanner nut wrench 6795894, remove end slotted spanner nut (38, figure 24) and cup washer (39). Retain cup washer for reuse. Remove hydraulic pump drive gear assembly from rear housing.

b. Remove front bearing.

c. Install 6796250 bearing removal support on an arbor press, and use 23034229 bearing inner ring plate and 6796525 drift, remove front bearing inner ring (figures 21, 25, and 26).

d. Remove hydraulic pump drive gear (42, figure 24), tachometer drive take–off gear (43) with rear bearing from shaft (41).

e. Press rear bearing away from split external retainer (44) and remove retainer from hydraulic pump drive shaft.

f. Using a soft drift, remove hydraulic pump drive gear rear bearing outer ring from rear housing.

g. Inspect bearing cage. Refer to WP 039 00.

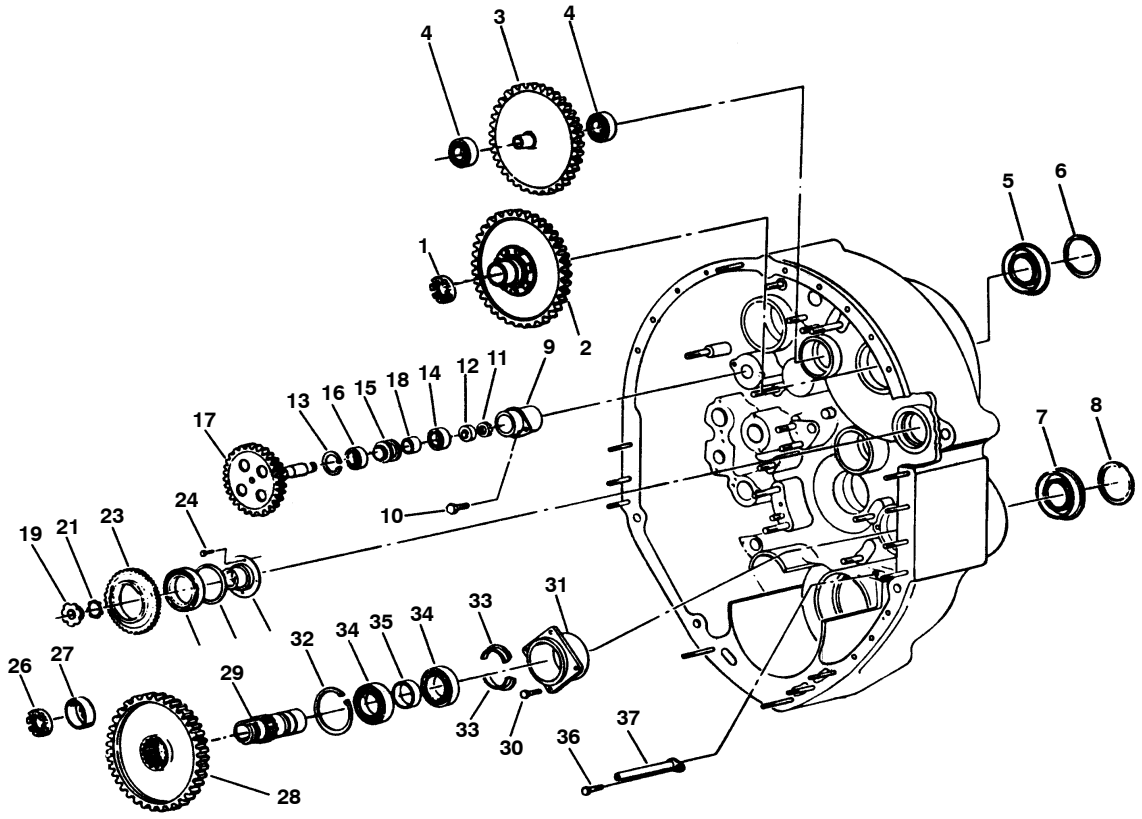

1. End Slotted Spanner Nut
2. Alternator Drive Gear Assembly
3. Hydraulic Pump Idler Gear
4. Roller Bearings
5. Shaft Seal
6. Internal Retaining Ring
7. Shaft Seal
8. Internal Retaining Ring
9. Bearing Cage
10. Bolt
11. End Slotted Spanner Nut
12. Cup Washer
13. Internal Retaining Ring
14. Roller Bearing
15. Double Ended Spacer
16. Roller Bearing
17. Tachometer Drive Idler Gear
18. Bearing Spacer
19. Spanner Nut
20. Key Washer
21. Internal Retaining Ring
22. Roller Bearing
23. Hydraulic Pump Idler Gear Alternate
24. Bolt
25. Bearing Flange
26. End Slotted Spanner Nut
27. Cup Washer
28. Hydraulic Pump Drive Gear Alternate
29. Generator Drive Shaft
30. Bolt
31. Bearing Cage
32. Internal Retaining Ring
33. External Retaining Split Ring
34. Roller Bearings
35. Generator Drive Shaft Spacer
36. Bolt
37. Pinion Gear Oil Jet Tube Assembly

Figure 24. Reduction Gear Accessory Drive Details (Sheet 1 of 2)

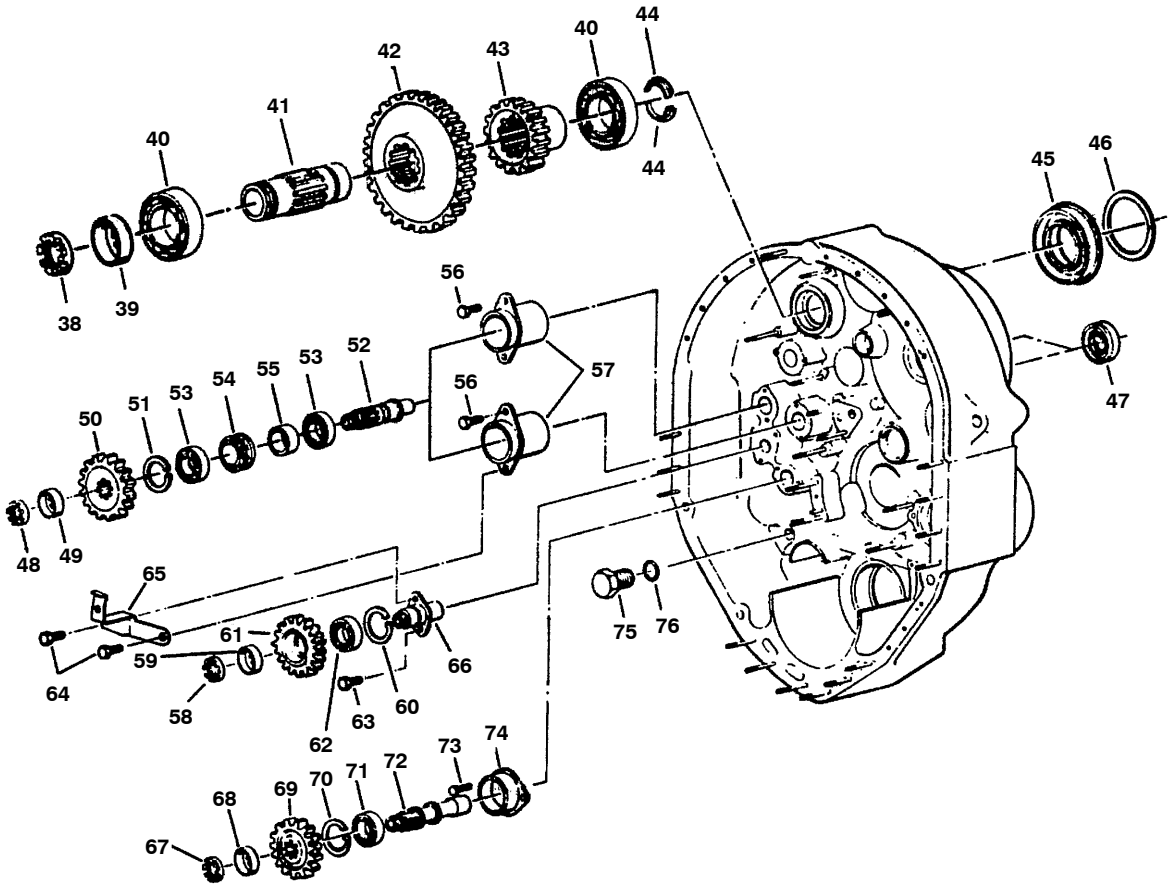

38. End Slotted Spanner Nut
39. Cup Washer
40. Roller Bearings
41. Hydraulic Pump Drive Shaft
42. Hydraulic Pump Drive Gear
43. Tachometer Drive Take–Off Gear
44. Split External Retaining Ring
45. Shaft Seal
46. Internal Retaining Ring
47. Seals
48. End Slotted Spanner Nuts
49. Cup Washers
50. Tachometer Drive Gears
51. Internal Retaining Rings
52. Tachometer Drive Shafts
53. Roller Bearings
54. Double Ended Spacers
55. Bearing Spacers
56. Bolts
57. Bearing Cages
58. End Slotted Spanner Nut
59. Cup Washer
60. Internal Retaining Ring
61. Oil Pump Drive Idler Gear
62. Roller Bearing
63. Bolt
64. Bolts
65. Tachometer Oil Tube Support Bracket
66. Oil Pump Drive Idler Journal
67. End Slotted Spanner Nut
68. Cup Washer
69. Oil Pump Drive Gear
70. Internal Retaining Ring
71. Roller Bearing
72. Oil Pump Drive Shaft
73. Bolt
74. Bearing Cage
75. Plug
76. Preformed Packing

Figure 24. Reduction Gear Accessory Drive Details (Sheet 2)

Figure 25. 23034229 Inner Ring Puller Plate

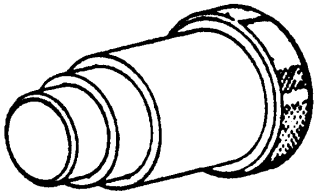

Figure 26. 6796525 Inner Ring Drift

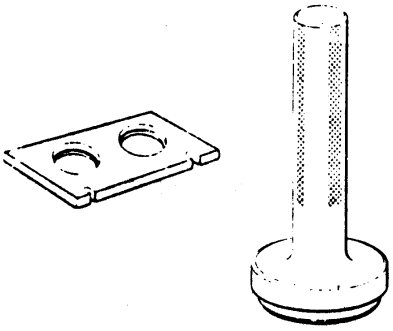

Figure 27. 6796526 Bearing Cage Support Plate and 6796527 Bearing Outer Ring Drift

17. HYDRAULIC PUMP IDLER GEAR REMOVAL.

Support Equipment Required

Part No./Type Designation	Nomenclature
6796214	Plate, puller, starter idler
6796250	Support, bearing removal
6796521	Puller, bearing outer ring
6796608	Drift, hydraulic pump idler gear
6799793	Drift

a. Remove hydraulic pump idler gear (3, figure 24) from rear housing.

b. Install 6796250 bearing removal support on an arbor press, and with 6796214 bearing puller plate (figure 22), 6796608 drift (figure 28), and 6799793 drift (figure 22), remove the front and rear bearing (4, figure 24) inner rings.

c. Install 6796521 bearing outer ring puller (figure 20), and remove the outer ring from rear housing.

d. Inspect bearing cage. Refer to WP 039 00.

18. HYDRAULIC PUMP DRIVE IDLER GEAR ALTERNATE REMOVAL.

Support Equipment Required

Part No./Type Designation	Nomenclature
6796599	Wrench, spanner, generator idler bearing spindle nut

a. Using 6796599 wrench (figure 18), remove spanner nut (19, figure 24) and key washer (20). Discard washer. Remove hydraulic pump drive idler gear alternate and bearing from bearing flange (25).

b. Remove internal retaining ring (21) and bearing from hydraulic pump drive idler gear alternate (23).

c. Remove four bolts (24). Remove bearing flange (25) from rear housing.

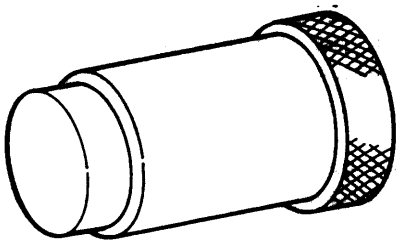

Figure 28. 6796608 Hydraulic Pump Idler Gear Drift

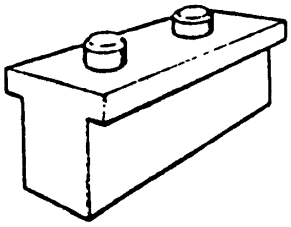

Figure 29. 6798239 Tachometer Drive Idler Gear Holding Fixture

19. TACHOMETER DRIVE IDLER GEAR REMOVAL.

Support Equipment Required

Part No./Type Designation	Nomenclature
6796206	Plate, puller, tachometer drive shaft bearing
6796250	Support, reduction gear bearing removal
6798239	Fixture, holding, tachometer drive idler gear
6799535	Wrench, spanner, end slot spanner nut

NOTE

Tachometer drive idler gear requires force for removal.

a. Remove two bolts (10, figure 24) and detach the tachometer drive idler gear (17), bearings and cage assembly from rear housing.

b. Install tachometer drive idler gear in 6798239 holding fixture (figure 29) and with 6799535 spanner nut wrench, (figure 16) remove the end slotted spanner nut (11, figure 24) and cup washer (12).

c. Remove internal retainer ring (13) between gear and forward bearing.

d. Remove gear and roller bearings from cage (9).

e. Using 6796250 bearing removal support (figure 21) and 6796206 bearing puller plate (figure 30) on an arbor press, remove rear bearing (14, figure 24), bearing spacer (18), outer ring bearing spacer (15), and front bearing (16) from tachometer drive idler gear.

20. TACHOMETER DRIVE SHAFT AND TACHOMETER DRIVE GEAR REMOVAL.

Support Equipment Required

Part No./Type Designation	Nomenclature
6796206	Plate, puller, bearing
6796250	Support, bearing removal
6799535	Wrench, spanner, end slot spanner nut

a. Using 6799535 wrench (figure 18), remove end slot spanner nuts (48, figure 24) and cup washers (49) on tachometer drive shafts (52).

b. Remove tachometer drive gears (50).

c. Remove bolts (56) and bolt (64) securing bearing cages (57) and tachometer oil tube support bracket (65). Loosen other bolt (64) securing support bracket at oil pump drive idler journal (66). Move support bracket clear of bearing cage.

d. Remove bearing cages (57), tachometer drive shafts (52) and bearings (53).

e. Remove internal retaining rings (51) from bearing cages.

f. Remove shafts and bearings from cages.

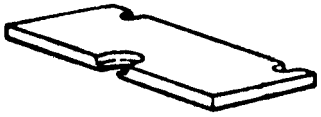

Figure 30. 6796206 Bearing Puller Plate

g. Using 6796250 bearing removal support and 6796206 puller plate (figure 30) on an arbor press, remove the bearings (53), bearing outer ring spacer (54), inner ring bearing spacer (55) from tachometer drive shafts.

21. OIL PUMP DRIVE SHAFT AND OIL PUMP DRIVE GEAR REMOVAL.

Support Equipment Required

Part No./Type Designation	Nomenclature
6796206	Plate, puller, bearing
6796250	Support, bearing removal
6799535	Wrench, spanner, end slot spanner nut

CAUTION

The oil pump drift shaft shall be externally supported during removal of the drive gear. Failure to support the shaft will result in the shaft, with bearing inner ring components, falling down through its bore and out of the rear housing.

a. Using 6799535 wrench (figure 18), remove end slot spanner nut (67, figure 24) and cup washer (68) from oil pump drive shaft (72).

b. Remove oil pump drive gear (69) from shaft. Keep shaft in position by reinstalling cup washer (inverted) or tablock washer and spanner nut fingertight.

c. Remove two bolts (73) and detach bearing cage (74), bearing (71), and oil pump drive shaft (72) from rear housing.

d. Remove internal retainer ring (70) and detach bearing and oil pump drive shaft (72) from bearing cage.

e. Remove front portion of inner ring.

f. Using 6796250 bearing removal support and 6796206 puller plate on an arbor press, remove bearing from oil pump drive shaft.

22. OIL PUMP DRIVE IDLER JOURNAL AND OIL PUMP DRIVE IDLER GEAR REMOVAL.

Support Equipment Required

Part No./Type Designation	Nomenclature
6796206	Plate, puller, bearing
6796250	Support, bearing removal
6799535	Wrench, spanner, end slot spanner nut

a. Using 6799535 wrench (figure 18), remove end slot spanner nut (58, figure 24) and cup washer (59) from oil pump drive idler journal (66).

b. Remove bolt (63) and (64) and remove tachometer oil tube support bracket (65) and oil pump drive idler journal (66).

c. Remove internal retaining ring (60) from gear (61) and remove outer ring of bearing (62).

d. Using 6796250 bearing removal support and 6796206 puller plate on an arbor press, remove inner ring and rollers of bearing (62) from journal (66).

23. PROPELLER SHAFT THRUST BEARING NUT, OIL SEAL, AND NOSE BEARING THRUST PLATE REMOVAL. Refer to WP 034 00.

24. PROPELLER SHAFT PLUG REMOVAL. Refer to WP 035 00.

25. PINION SHAFTGEAR BALANCE ASSEMBLY REMOVAL.

NOTE

The assembly includes the coupling outer member shaft, scavenge pump drive gear, and bearings.

a. Position front housing to vertical with propeller shaft downward.

b. Remove screws (19, figure 31) and remove pinion baffle assembly (20) from main diaphragm (29).

c. Lift pinion shaftgear balance assembly (22) from main diaphragm.

d. Remove rear bearing outer ring and rollers.

e. Remove and discard preformed packing (21) and (21B).

f. Visually inspect front and rear pinion bearings per WP 039 00.

26. MAIN DRIVE AND SUN GEAR REMOVAL.

Support Equipment Required

Part No./Type Designation	Nomenclature
SWE 8100	Powerench, Sweeny
SWE 8471	Plate, anchor
6796178	Puller, outer ring, main drive gear bearing
6796472	Puller, inner ring, rear carrier bearing
6799875	Wrench, spanner, rear carrier bearing retainer nut (Use with SWE 8100 Powerench)

a. Turn front housing to the vertical position in the stand. Remove carrier oil tube (1, figure 3) from inside the sun gear hub (6).

b. Remove 20 bolts (2) and ten locking washers (3) which attach the sun gear hub flange (4) to the main drive gear (15, figure 31).

c. Lift sun gear hub flange (4, figure 31), sun gear hub (6) and sun gear (8) from the main drive gear (figure 32).

d. Remove main drive gear bearing locking key (14, figure 31).

e. Remove two internal retaining rings (5) and two internal retaining rings (7) from the ID of sun gear (8) and sun gear hub flange (4).

f. Remove sun gear hub (6) from the sun gear hub flange (4) and sun gear (8).

g. Remove internal retaining ring (9), lock pin retaining ring (10) and lock pin (11) securing the main drive gear spanner nut (12).

CAUTION

Main drive gear spanner nut (12) has lefthand threads.

h. Remove main drive gear spanner nut (12) using 6799875 rear carrier bearing retainer nut wrench with SWE 8100 Powerench and SWE 8471 anchor plate (figure 33).

i. Lift main drive gear from planet rear carrier.

j. Remove main drive gear rear bearing inner ring (13, figure 31).

NOTE

The bearing is marked R on rear side. Be sure all component parts are kept together.

k. Remove bearing outer ring and rollers (13) from main drive gear, using 6796178 main drive gear bearing outer ring puller (figure 34).

l. Remove pinion gear front bearing outer ring and rollers.

27. MAIN DIAPHRAGM REMOVAL AND DISASSEMBLY.

NOTE

Reduction Gear Assemblies are identified with matched set serial numbers, (Set S/N) on the front housing, rear housing, main diaphragm and inner diaphragm.

a. Remove screws (17, figure 31) and remove oil return baffle (18).

b. Remove main diaphragm (29) from front housing.

c. Remove preformed packings (30).

d. Remove screws (31), washers (32) and oil jet nozzle (33).

e. Remove nuts (23), key assembly (24), keyed segment plate (25) and segment plate (26).

NOTE

This bearing is marked “F” on the front face. Be sure all components are kept together.

f. Remove outer ring and rollers of bearing (27) from diaphragm. The inner ring of bearing (27) and key (28) are removed from rear carrier after propeller shaft and planetary gear assembly is removed.

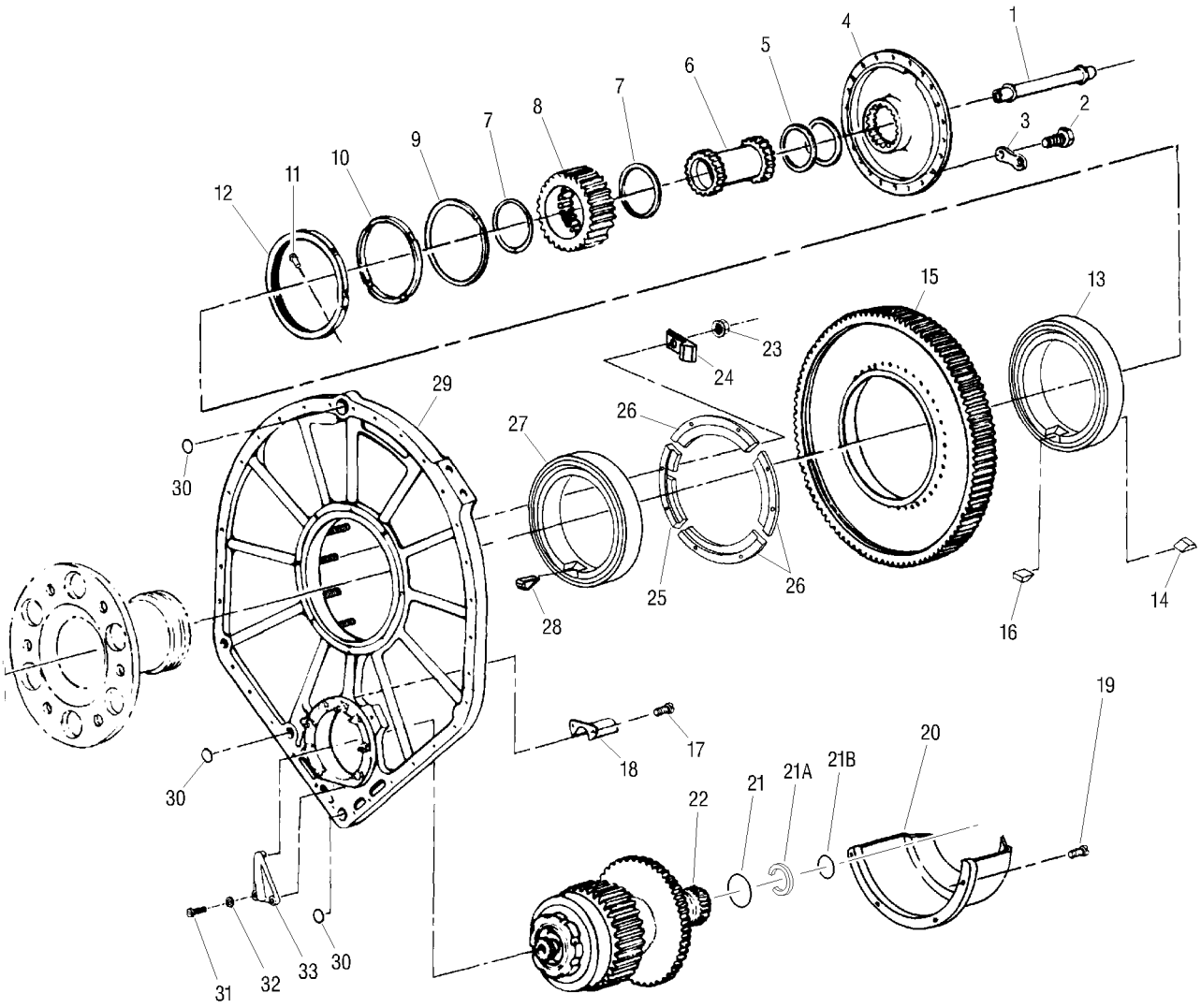

1. Carrier Oil Delivery Tube
2. Bolt
3. Lockwasher
4. Sun Gear Hub Flange
5. Internal Retaining
6. Sun Gear Hub
7. Internal Retaining Rings
8. Sun Gear
9. Internal Retaining Ring
10. Lock Pin Retaining Ring
11. Lock Pin
12. Spanner Nut
13. Roller Bearing
14. Key
15. Main Drive Gear
16. Key
17. Screw
18. Oil Return Baffle
19. Screw
20. Pinion Baffle Assembly
21. Preformed Packing

21A. Retainer Ring
21B. Preformed Packing
22. Pinion Shaftgear Balance Assembly
23. Nut
24. Key Assembly
25. Keyed Segment Plate
26. Segment Plates
27. Roller Bearing
28. Key
29. Main Diaphragm
30. Preformed Packing
31. Screw
32. Washer
33. Oil Jet Nozzle

Figure 31. Main Drive Gear, Pinion Shaftgear Balance Assembly and Main Diaphragm Details

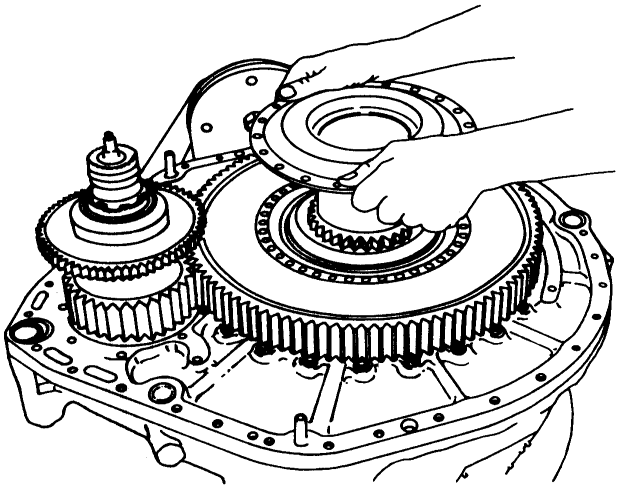

Figure 32. Removing Sun Gear and Hub

28. PROPELLER SHAFT AND PLANETARY GEAR ASSEMBLY REMOVAL AND DISASSEMBLY.

Support Equipment Required

Part No./Type Designation	Nomenclature
6796010	Lift, propeller shaft and planet gear assembly
6796014	Plate, index, planet gear
6796472	Puller, planet gear rear carrier bearing inner ring
6796691	Retainer, propeller shaft bearing roller
6796834	Stand, propeller shaft and planetary gear

NOTE

The index plate is installed to keep the planet gears in relative position to the ring gear. If the plate is not installed at this time, the planet gears will have to be indexed at front housing assembly.

If gearbox has been operated without rear cone installed, with thrust nut lock misaligned or loss of propeller retaining nut torque, the propeller shaft or Reduction Gear Assembly must be returned to Depot Level Maintenance for disposition.

a. Install 6796014 planet gear index plate (figure 35). Plate will be removed after the propeller and planet gear assembly is reinstalled at assembly.

b. Ensure thrust sensitive switch actuator is removed. Refer to WP 036 00 for removal.

c. Attach 6796010 propeller shaft and planet gear lift (figure 36) to threads of planet carrier gear.

d. Remove two flathead screws (1, figure 37) (previously loosened) holding nose bearing plate (5) to front housing.

e. Remove propeller shaft and planet gear from front housing. Place the assembly in 6796834 propshaft and planetary gear stand. (Figure 43).

NOTE

Two spring tension washers (Belleville) are installed between the propeller ball and roller bearings. When the propeller shaft and planet gear assembly is removed, the washers will be setting free on the roller bearing outer ring. The front and rear locations of these washers should be tagged for reinstallation in the same locations.

f. Remove spring tension washers and temporarily band together.

g. Install 6796691 bearing roller retainer (figure 38) in propeller shaft roller bearing in front housing.

h. Remove lift and install 6796472 planet rear carrier (front) bearing inner ring puller (figure 39).

i. Remove bearing inner ring (7, figure 37) from planet rear carrier (figure 39). Remove inner ring locking key (8, figure 37).

j. Remove lockwire, bolts (9) and washers (10) from scavenge oil pump (15). Remove pump from nose bearing plate (5).

k. Remove cotter pins (16), nuts (17), and washers (18) from scavenge oil pump (19). Remove and discard preformed packing (20).

NOTE

Only I–9 level maintenance facilities have the capability of removing propeller bearings and returning planet assembly to depot maintenance facility.

l. Attach the propeller shaft and planet gear lift No. 6796010 to the threads of the planet carrier gear.

CAUTION

Ensure that the front of propeller shaft has been released from the buildup stand by loosening the nut on the tube of the stand.

m. Loosen nut on buildup stand No. 6796834, and remove the propeller shaft and planet gear assembly (6, figure 37) from stand.

CAUTION

To prevent tipping, hold the planet assembly steady when placing on surface and removing lift tool.

n. Place the propeller shaft and planet gear assembly on a clean non–abrasive flat surface or bench, propeller shaft end down.

o. Remove the propeller shaft and planet gear lift No. 6796010 from the threads of the planet carrier gear.

CAUTION

Be careful not to damage gears when handling planet gear assembly use a soft cloth or padding to protect gears when rotating the planet assembly aft end down.

p. Slowly rotate the planet gear assembly on surface or bench, until it is positioned aft end down.

q. Install the propeller shaft thrust bearing and scavenge pump drive gear puller No. 6796877 over the propeller shaft and remove the ball bearing (4, figure 37) and roller bearing (3, figure 37).

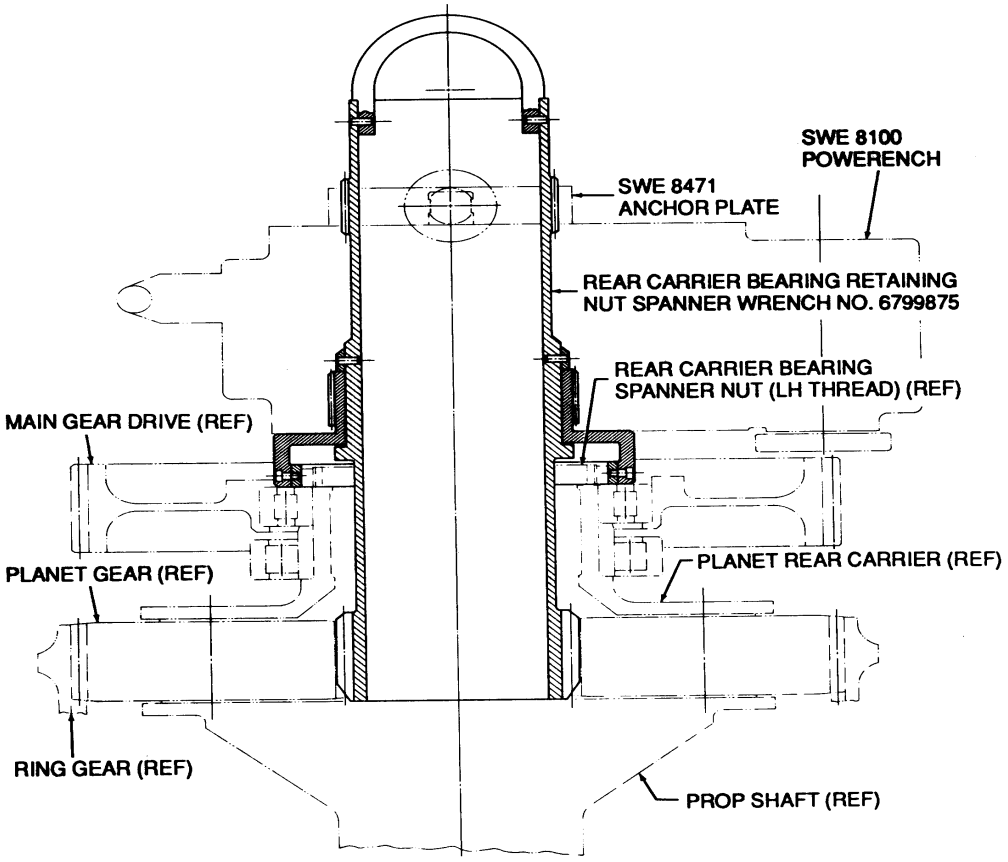

Figure 33. Removing Rear Carrier Bearing Spanner Nut

29. REDUCTION GEAR SCAVENGE OIL PUMPS DISASSEMBLY.

NOTE

Disassemble pump only when required to replace/repair drive gear or shaftgear. Note washer relationship for proper assembly.

a. For nose scavenge oil pump (15, figure 37). Remove cotter pin (11), nut (12), bolt (13) and gear (14) from pump.

CAUTION

Do not attempt to straighten dimple prior to cup washer removal. Cup washer dimples are removed by the end slot spanner nut wrench when loosening nut.

b. For main scavenge oil pump (19). Remove end slotted spanner nut (21) and cup washer (22) from shaftgear (23). Retain cup washer for reuse. Remove shaftgear from pump.

30. INSPECTION.

a. Upon removal, inspect parts per WP 039 00.

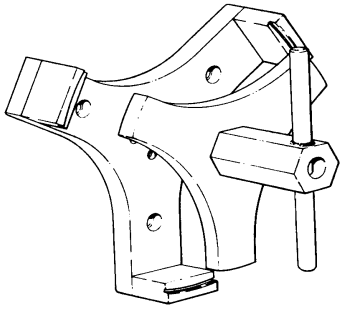

Figure 34. Main Drive Gear Bearing Outer Ring Puller 6796178

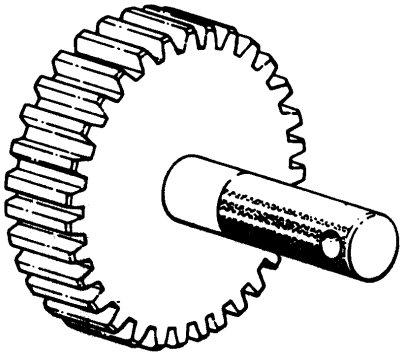

Figure 35. 6796014 Planet Gear Index Plate

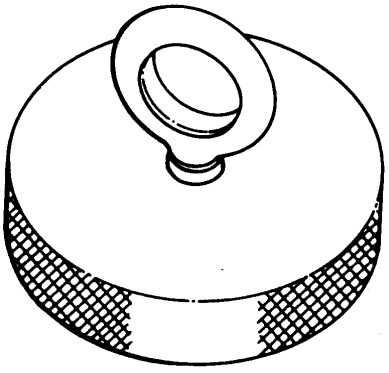

Figure 36. 6796010 Propeller Shaft and Planet Gear Lift

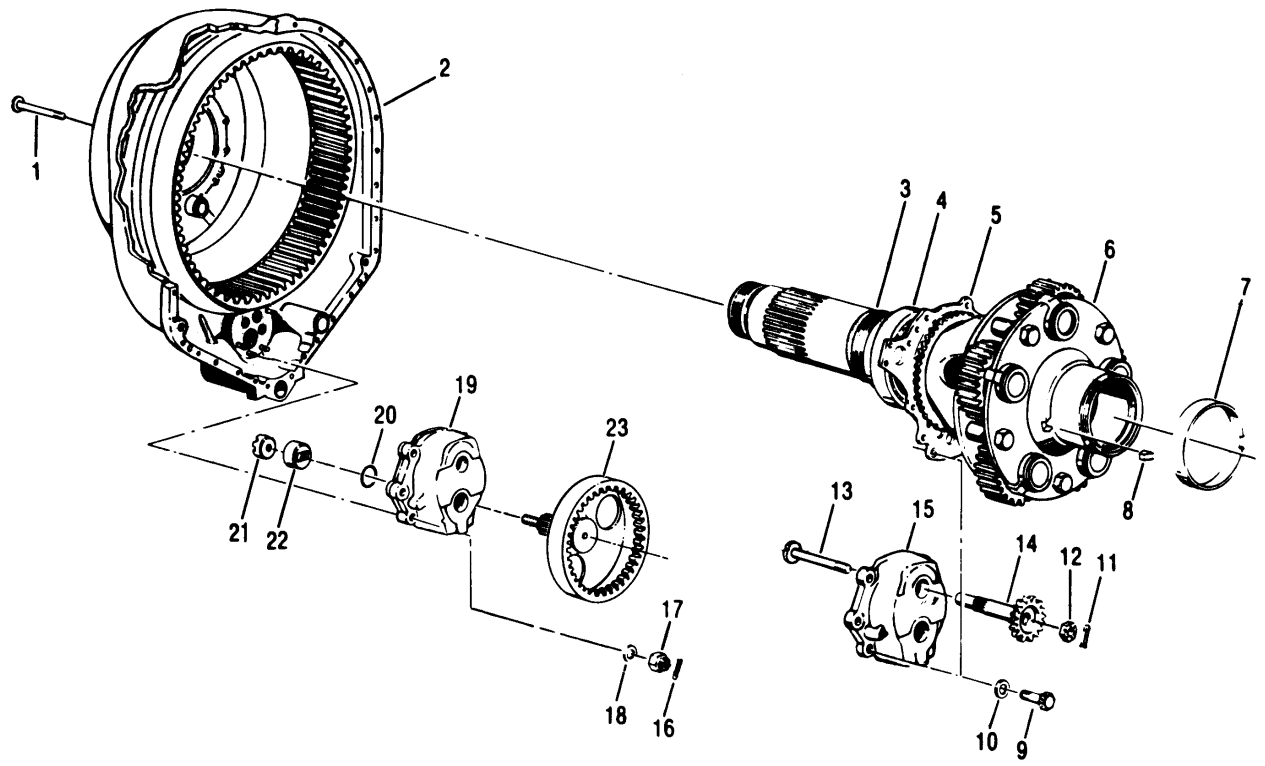

1. Screw
2. Front Housing
3. Roller Bearing Inner Ring (Ref)
4. Ball Bearing (Ref)
5. Nose Bearing Plate (Ref)
6. Propeller Shaft and Planetary Gears
7. Bearing Inner Ring
8. Key
9. Bolt
10. Washer
11. Cotter Pin
12. Nut
13. Bolt
14. Gear
15. Scavenge Oil Pump (Nose)
16. Cotter Pin
17. Nut
18. Washer
19. Scavenge Oil Pump (Main)
20. Preformed Packing
21. End Slotted Spanner Nut
22. Cup Washer
23. Shaftgear

Figure 37. Propeller Shaft and Planetary Gear Assembly and Scavenge Pump Details

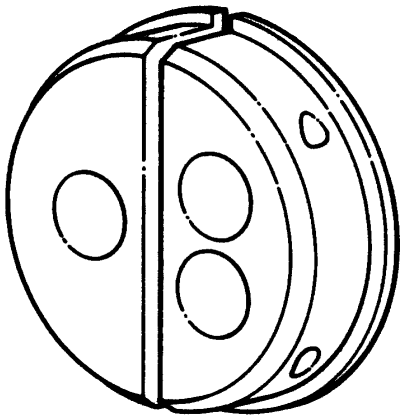

Figure 38. 6796691 Propeller Shaft Bearing Roller Retaining

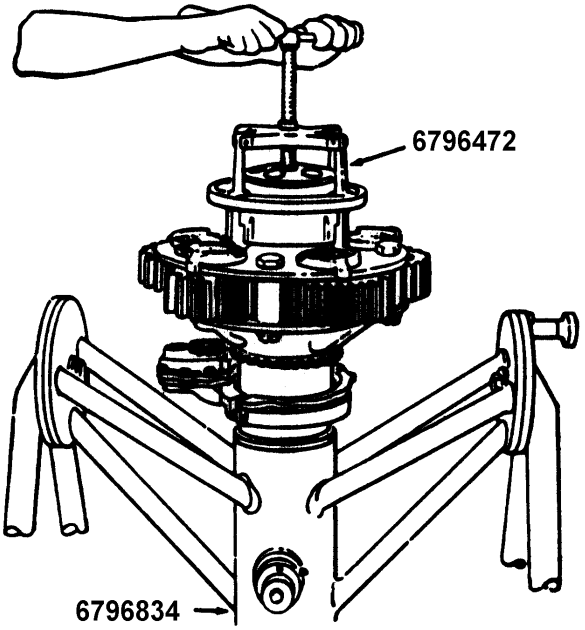

Figure 39. Removing Planet Rear Carrier Bearing Inner Ring with Puller 6796472

INTERMEDIATE MAINTENANCE

CLEANING, INSPECTION, REPAIR, AND REPLACEMENT

REDUCTION GEAR UNIT PARTS

This Work Package Supersedes WP 039 00, dated 1 July 2006

Reference Material

Cleaning and Corrosion Treatment - Standard Practices . . . . . WP 013 00
Inspection and Non-Destructive Testing (NDT) - Standard Practices . . . . . WP 014 00
Assembly and Disassembly - Standard Practices . . . . . WP 016 00
Troubleshooting and Maintenance . . . . . WP 025 00
Propeller Shaft Oil Seal - Removal and Installation . . . . . WP 034 00
Reduction Gear Unit Assembly - Assembly . . . . . WP 040 00
Maintenance of Aeronautical Antifriction Bearings . . . . . NAVAIR 01-1A-503
Cleaning Materials . . . . . NAVAIR 07-1-503
Turbine Engine Cleaning Instructions . . . . . NAVAIR 07-1-504

Alphabetical Index

Subject Page No.
Cleaning 2
General 2
Inspection and Repair 2
Accessory Drive Shafts Internal Spline Inspection 2
Bearings 12
Cleaning 12
General Inspection 12
Removal and Disassembly 12
Eyebolt Inspection 16
Eyebolt Pin Inspection 16

Alphabetical Index (contd)

Subject Page No.

Gears and Gear Shafts Inspection 15
Inner Diaphragm (Refer to Rear Housing and (Inner) Diaphragm Assembly)
Main Diaphragm Inspection 14
Main Drive Gear (Refer to Pinion and Accessory Drive Gear and Main Drive Gear Inspection)
Oil Tubes Inspection 14
Pinion and Accessory Drive Gear Assembly and Main Drive Gear Inspection 14
Propeller Brake Inspection 14
Propeller Shaft Cleaning and Inspection 4
Propeller Shaft Threads Inspection and Repair 15
Rear Carrier Bearing Spanner Nut Lockpin Retaining Ring Inspection 15
Rear Housing and (Inner) Diaphragm Assembly Bearing Cage Inspection 13
Rear Housing and (Inner) Diaphragm Assembly Inspection and Repair 14
Reduction Gear Assembly Inspection Following Sudden Engine Stop by Propeller Object Strike 2
Starter Pad Cavity Inspection and Repair 3
Strut Clevis Bolt Inspection 16
Strut Inspection and Repair 15
Replacement 16
Coupling Outer Member Shaft Replacement 19
Pinion Gear Bearing Replacement 16

Record of Applicable Technical Directives

None

1. **CLEANING**.

2. GENERAL. Clean parts in accordance with standard practices (WP 013 00) or specific instructions, this WP.

3. **INSPECTION AND REPAIR**.

4. REDUCTION GEAR ASSEMBLY INSPECTION FOLLOWING SUDDEN ENGINE STOP BY PROPELLER OBJECT STRIKE.

a. Refer to troubleshooting WP 025 00.

5. ACCESSORY DRIVE SHAFTS INTERNAL SPLINE INSPECTION.

Support Equipment Required

Part No./Type Designation	Nomenclature
6872245	Gage, internal spline

Materials Required

Specification No./Part No.	Nomenclature
MIL-PRF-81322	Grease

a. When an alternator, hydraulic pump, or starter, is removed, inspect the internal splines of the drive shafts in the reduction gear as follows:

b. Clean the drive shaft splines.

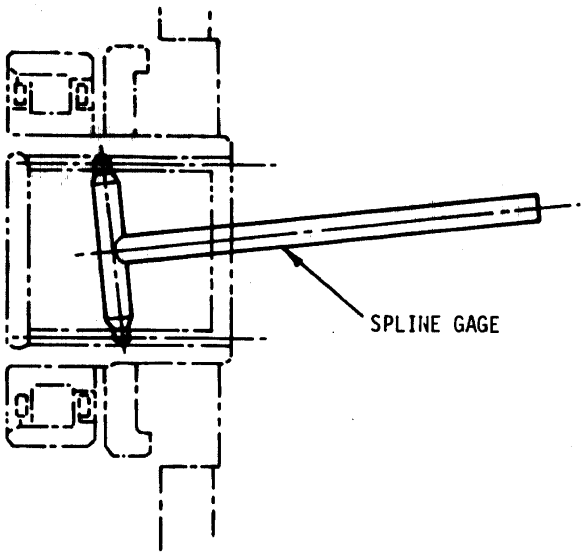

Figure 1. Accessory Drive Shaft Internal Spline Wear Inspection Using 6872245 Gage

c. Insert the 6872245 internal spline gage in a vertical position as shown in figure 1.

d. Apply a light pressure on the gage handle in the direction of the centerline of the spline. There should be little, if any, movement.

e. Excessive wear is indicated if the gage handle reaches or passes through the center line of the internal spline.

f. Reposition spline gage in a horizontal position and repeat inspection procedure.

g. Drive shafts along with the gears and bearings shall be replaced if excessive wear is indicated.

General Purpose Aircraft Grease MIL-PRF-81322 37

h. Prior to installation of the accessory, lubricate the internal drive splines with MIL-PRF-81322 grease.

6. STARTER PAD CAVITY INSPECTION AND REPAIR.

Materials Required

Specification No./Part No.	Nomenclature
MIL-PRF-85285	Coating, Polyurethane
AMS-M-3171 Type VI (Dow 19)	Sodium dichromate
MIL-PRF-23377	Coating, High Solids Epoxy Primer

a. Inspect the starter pad cavity for corrosion and damage whenever the starter or reduction gear assembly is removed.

b. Use the following procedure to treat corroded areas:

NOTE

If corrosion pitted depth exceeds 0.200 in. in the pad cavity or 0.060 in. around the screw bushings, reject reduction gear assembly.

Sodium Dichromate Magnesium Treatment (Chrome Pickle) AMS-M-3171, Type VI (Dow 19) 12

(1) Clean corrosion from area and treat (excluding seal assembly area) with AMS-M-3171, Type VI (Dow 19) sodium dichromate. Work fluid into pitted areas using a sharp probe and brush.

(2) Reapply AMS-M-3171, Type VI (Dow 19) to the treated area.

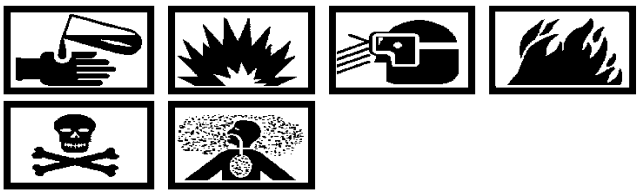

High Solids Epoxy Primer MIL-PRF-23377 15

(3) Dry area and apply MIL-PRF-23377 primer.

(4) Air dry for two hours.

Polyurethane Coating MIL-PRF-85285 38

(5) Spray or brush with MIL-PRF-85285 polyurethane.

7. PROPELLER SHAFT CLEANING AND INSPECTION.

Support Equipment Required

Part No./Type Designation	Nomenclature
6872794	Thread Chasing Tool
8400-T56	Digital Optical Micrometer Inspection Set
---	5X or 10X Magnifying Glass
---	Flashlight

Materials Required

Specification No./Part No.	Nomenclature
A-A-1206	Abrasive, Crocus Cloth
MIL-C-85043	Cloth, Cleaning, Low Lint
MIL-PRF-680, Type II	Solvent, Dry Cleaning
---	Rouge, Jewelers

CAUTION

Handle propeller shaft carefully to prevent handling damage.

a. Remove the propeller rear cone and propeller shaft thrust nut lock. Refer to WP034 00. (Do not remove thrust nut if no corrosion is present forward on shaft.)

CAUTION

During the propeller shaft inspection pay particular attention to surfaces of the entire shaft. This includes from the journal area adjacent to the rear thrust plate, to the threads at the forward end of the shaft.

When inspecting the propeller shaft journals particular attention must be provided to 0.5 inches from the rear end of journal C (middle journal when planet system assembly is removed from the reduction gear assembly or aft journal when installed, end closest to the reduction gear assembly). No cracks allowed.

b. If the engine has been operated without a rear cone installed, with thrust nut lock improperly installed, or loose thrust nut, paint the propeller shaft red, tag propeller shaft, and return the reduction gear assembly to depot maintenance site.

c. Inspect propeller shaft for corrosion. If corrosion is evident, remove corrosion by polishing the affected areas with No. 500 crocus cloth or with a small hand buffing wheel and jewelers rouge.

NOTE

The term defect refers to an area of potential damage including metal to metal contact wear, gouging, scaling, pitting, galling, nicks, scratches, fatigue cracking, grooves, blemishes, or other type of surface damage.

d. Visually inspect propeller shaft, splines, and journals for defects using a 5X or 10X magnifying glass and a flashlight backlighting the propeller shaft at a low angle to highlight defects. The handheld inspection lens and LED flashlight from the Digital Optical Micrometer Inspection Set could also be used. If any defects are found examine the defect with the digital optical micrometer referencing the appropriate paragraph f, g, and/or h depending on defect location. Refer to Table 1 for inspection limits.

NOTE

The instructions outlined in subparagraphs e, f, g, and h are performed using the Digital Optical Micrometer Inspection Set. Refer to Figure 2.

The 10X eyepiece with reticle (4) is predominately used for depth measurements.

If greater magnifications or detail is needed the 20X eyepiece (3) can be used in place of the 10X eyepiece with reticle for taking depth measurements.

The 4X objective lens (6) can also be used for depth measurements.

e. Before inspecting the propeller shaft, practice using the digital optical micrometer (1) with the 3–leg base (2) and scratch sample plate (7) as follows:

NOTE

The scratch sample plate contains four scratches with depth measurements of 0.005 inches, 0.010 inches, 0.015 inches, and 0.020 inches.

The scratch sample plate and 3–leg base should not be used for calibration.

Use the 10X eyepiece with reticle and the 10X objective lens (5) for depth measurements.

(1) Thread the 3–leg base onto the optical micrometer. Refer to Figure 3.A.

(2) Turn on the digital display by pressing the green ON/OFF button. Refer to Figure 3.B.

(3) Rotate focus adjustments so display reads 0.0000.

(4) Place optical micrometer on the scratch sample plate. Shine the LED flashlight (22, Figure 2) down through the 10X eyepiece with reticle. Use the bright spot below as a target to position the optical micrometer over a scratch. Refer to Figure 3.B.

(5) Once the optical micrometer is properly positioned over a scratch look through the 10X eyepiece with reticle. Now focus on the surface adjacent to the scratch. Refer to Figure 3.C1.

(6) Push ZERO/ABS button. Check that the display reads 0.0000. Refer to Figure 3.B.

(7) Focus clockwise down into the scratch focusing sharply on the bottom of the scratch. Refer to Figure 3.C2.

(8) Read the depth of the scratch from the digital display and record results. The depth measurement obtained using the digital optical micrometer will be within ± 0.001 inches of the actual measurement.

(9) Repeat steps 5–8 for verification.

f. Propeller shaft and journal inspection using the digital optical micrometer.

NOTE

Use the 10X eyepiece with reticle and the 10X objective lens. For a wider field of view use the 4X objective lens. The stiffness of the swivel can be adjusted with a 1/8 inch allen wrench.

(1) Install the swivel mounting plate (21, Figure 2) into the Delrin v–block base assembly (11) and lightly tighten the upper thumb screws (14). Refer to Figure 4.A.

(2) Attach the Delrin v–block base assembly on the propeller shaft and evenly tighten the lower thumb nuts (13, Figure 2). Ensure that the spline indexing pin (17) is disengaged.

(3) Thread the optical micrometer into the swivel mounting plate.

(4) Loosen the lower thumb nuts as needed to position the Delrin v–block base assembly and locate the optical micrometer over the defect. Shine the LED flashlight down through the 10X eyepiece with reticle. Use the bright spot below to target the defect. Refer to Figure 4.B.

(5) Evenly tighten the lower thumb nuts. Place the LED Flashlight in the ring on the swivel mounting plate.

(6) Look through the 10X eyepiece with reticle. Focus on the surface adjacent to the defect.

(7) Push ZERO/ABS button. Check that the display reads 0.0000.

(8) Focus clockwise down into the defect focusing sharply on the bottom.

(9) Read the depth of the defect from the digital display and record results.

(10) Repeat steps 6–9 for verification as required.

g. Propeller shaft inspection near the gearbox wall using the digital optical micrometer.

NOTE

Use the 10X eyepiece with reticle and the 10X objective lens. For a wider field of view use the 4X objective lens.

(1) Install the 15 degree mounting plate (20, Figure 2) into the Delrin v–block base assembly and lightly tighten the upper thumb screws. Refer to Figure 4.A.

(2) Attach the Delrin v–block base assembly on the propeller shaft and evenly tighten the lower thumb nuts. Ensure that the spine indexing pin is disengaged.

(3) Thread the optical micrometer into the 15 degree mounting plate.

(4) Loosen the lower thumb nuts as needed to position the Delrin v–block base assembly and locate the optical micrometer over the defect. Shine the LED flashlight down through the 10X eyepiece with reticle. Use the bright spot below to target the defect. See Figure 4.B.

(5) Evenly tighten the lower thumb nuts. Place the LED Flashlight in the ring on the 15 degree mounting plate.

(6) Look through the 10X eyepiece with reticle. Focus on the surface adjacent to the defect.

(7) Push ZERO/ABS button. Check that the display reads 0.0000.

(8) Focus clockwise down into the defect focusing sharply on the bottom.

(9) Read the depth of the defect from the digital display and record results.

(10) Repeat steps 6–9 for verification as required.

h. Propeller shaft spline inspection using the digital optical micrometer.

NOTE

Use the 10X eyepiece with reticle and 4X objective lens. The stiffness of the swivel can be adjusted with a 1/8 inch allen wrench.

(1) Install the swivel mounting plate into the Delrin v–block base assembly and lightly tighten the upper thumb screws. Refer to Figure 4.A.

(2) With the spline indexing pin disengaged attach the Delrin v–block base assembly on the propeller shaft.

(3) Thread the optical micrometer into the swivel mounting plate, and rotate the swivel mounting plate to the left or the right alignment mark depending on defect location. Refer to Figure 5.

(4) With the lower thumb nuts loosened, lift and rotate the spline indexing pin 1/4–turn to engage the top of the spline, and locate the optical micrometer over the defect. Shine the LED flashlight down through the 10X eyepiece with reticle. Use the bright spot below to target the defect. Engaging the spline indexing pin at this time is critical.

(5) Place LED flashlight in the ring on the swivel mounting plate.

(6) Turn on the digital display (if the digital display is already on, turn the digital display off and then turn it on again by pressing the green ON/OFF button).

(7) Focus clockwise downward onto the spline face.

(8) Look through the 10X eyepiece with reticle. To optimize view of the spline face, rotate the swivel mounting plate very slightly, in the vicinity of the alignment mark. To move axially, loosen the upper thumb screws and slide the swivel mounting plate. Gently tighten the upper thumb screws and lower thumb nuts.

(9) Look through the 10X eyepiece with reticle. Focus on the surface adjacent to the defect.

(10) Push ZERO/ABS button. Check that the display reads 0.0000.

(11) Focus clockwise down into the defect focusing sharply on the bottom.

(12) Read the depth of the defect from the digital display and record results.

(13) Repeat steps 9–12 for verification as required.

CAUTION

Do not allow solvent to enter reduction gear.

Dry Cleaning Solvent
MIL–PRF–680, Type II **3**

i. Clean propeller shaft forward of thrust nut with MIL PRF–680, Type II dry cleaning solvent.

NOTE

The propeller cone seating areas on the shaft and thrust nut lock face shall be kept dry and free of polishing agents.

j. Remove all traces of polishing agents using clean MIL–C–85043 cloth.

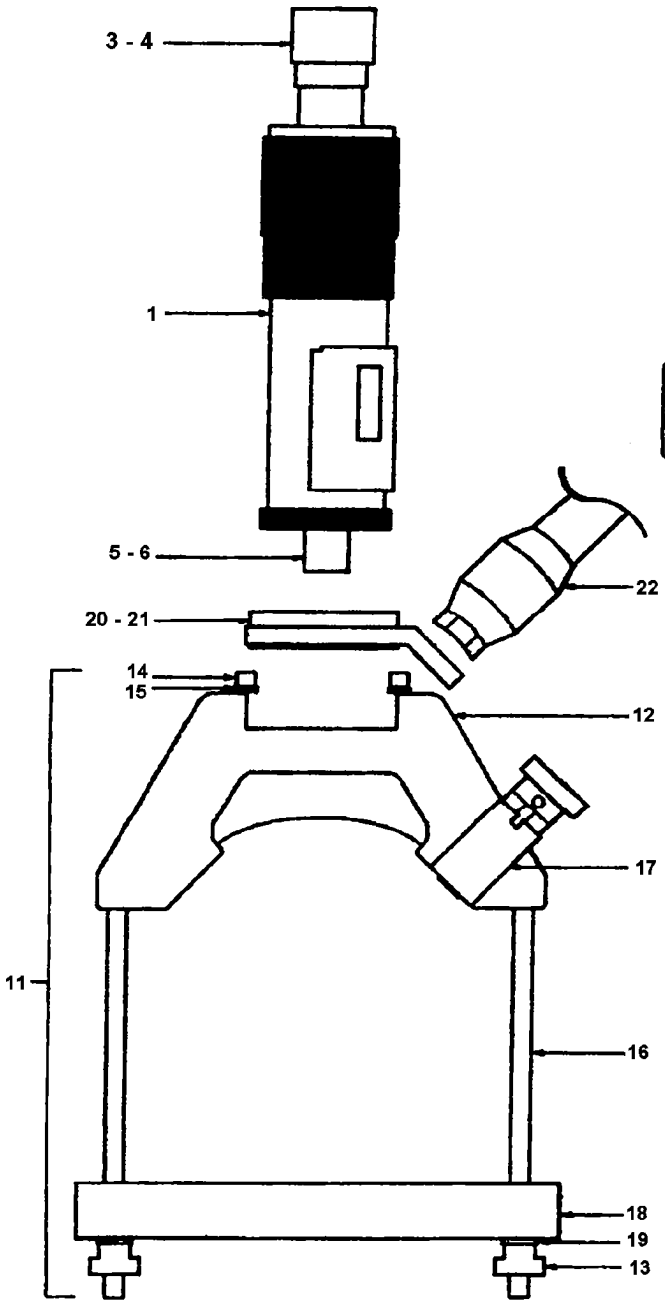

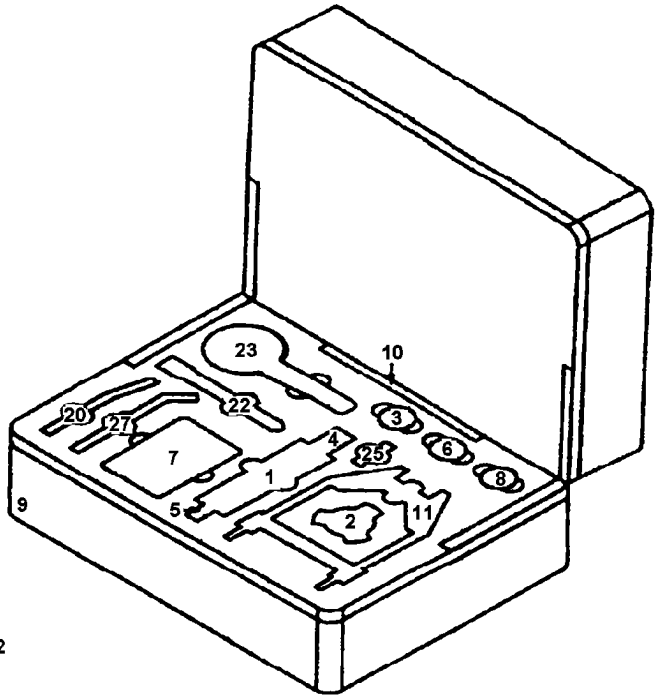

#	PART #	DESCRIPTION
1	8400-0	MICROMETER BODY W/DIGITAL DISPLAY
2	8400-7	BASE, 3 - LEG
3	8400-14	20X EYEPIECE
4	8400-15R	10X EYEPIECE WITH RETICLE
5	8400-16	10X OBJECTIVE LENS
6	8400-17	4X OBJECTIVE LENS
7	8400-32	SCRATCH PLATE
8	8400-37	BATTERY, SPARE, FOR DIGITAL DISPLAY
9	8400-38	CASE, CARRING
10	8400-39	MANUAL
11	8400-40	DELRIN V-BLOCK BASE ASSEMBLY
12	8400-40-1	BLACK DELRIN V-BLOCK BASE
13	8400-40-2	THUMB NUTS 1/4-20(2 PER ASSY.)
14	8400-40-3	THUMB SCREWS, 10-32 (2 PER ASSY.)
15	8400-40-4	WASHERS, DELRIN 10-32 (2 PER ASSY.)
16	8400-40-5	THREADED RODS (2 PER ASSY.)
17	8400-40-6	SPLINE INDEXING PIN
18	8400-40-7	CLAMPING BAR
19	8400-40-8	WASHERS, DELRIN 1/4" (2 PER ASSY.)
20	8400-41	15 DEGREE MOUNTING PLATE
21	8400-42	SWIVEL MOUNTING PLATE
22	8400-43	LED FLASHLIGHT WITH ADAPTER TIP
23	8400-44	HANDHELD INSPECTION LENS
24	8400-45	DESSICANT PACKET
25	8400-46	LENS WIPES

Figure 2. Digital Optical Micrometer Inspection Set

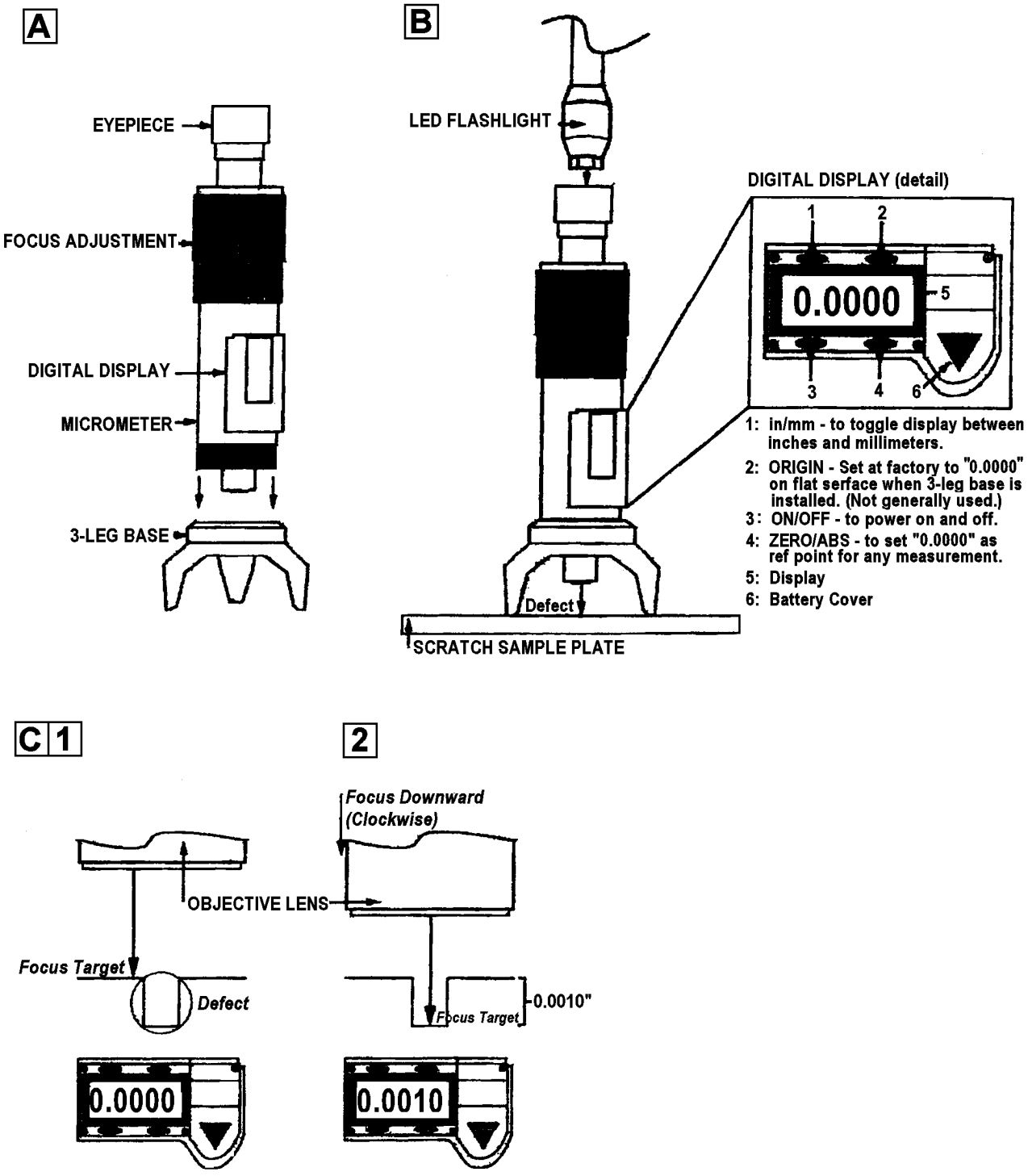

Figure 3. T56-A-427 Optical Micrometer Inspection Using Scratch Plate

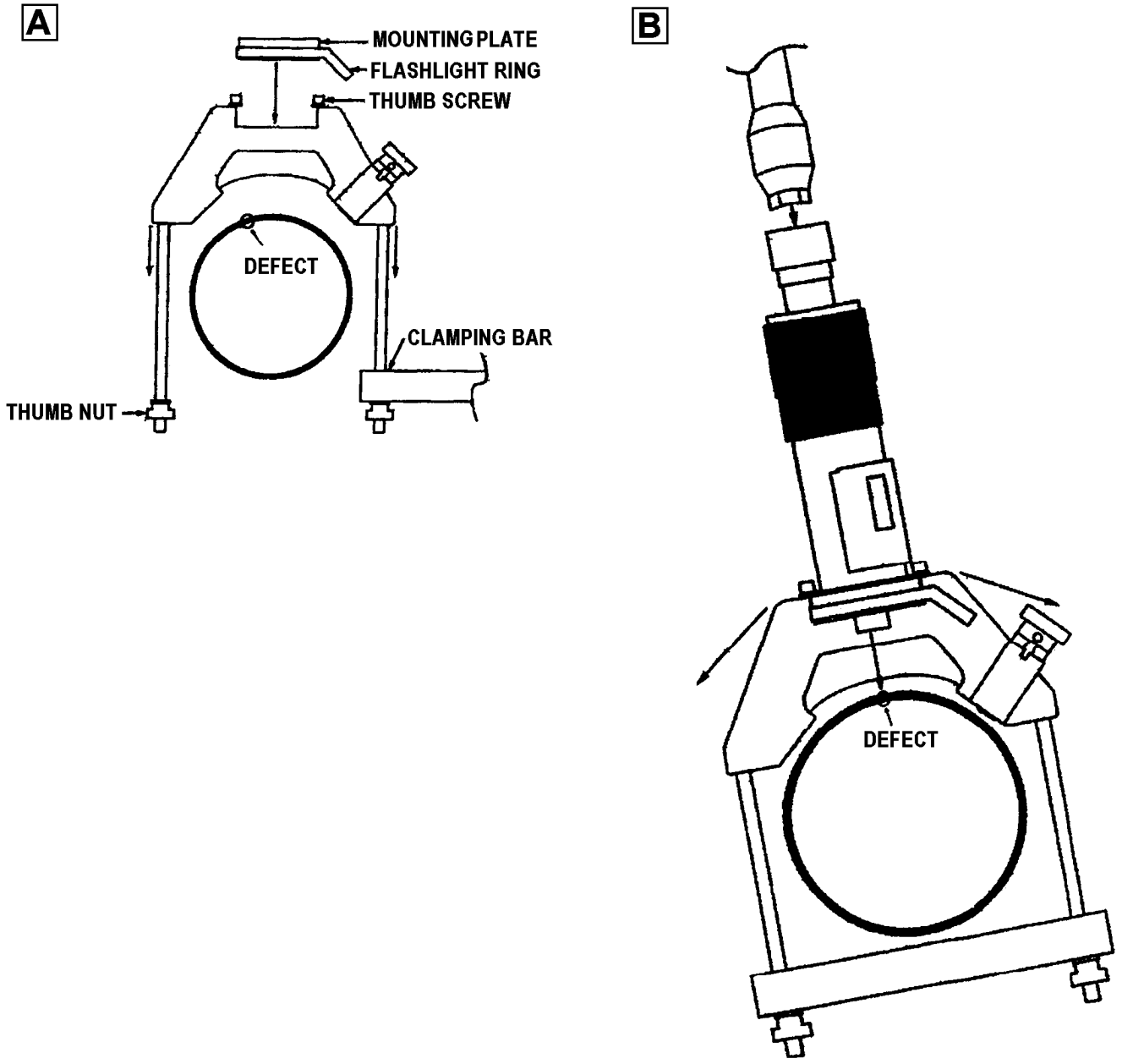

Figure 4. T56–A–427 Propeller Shaft Inspection Using Optical Micrometer

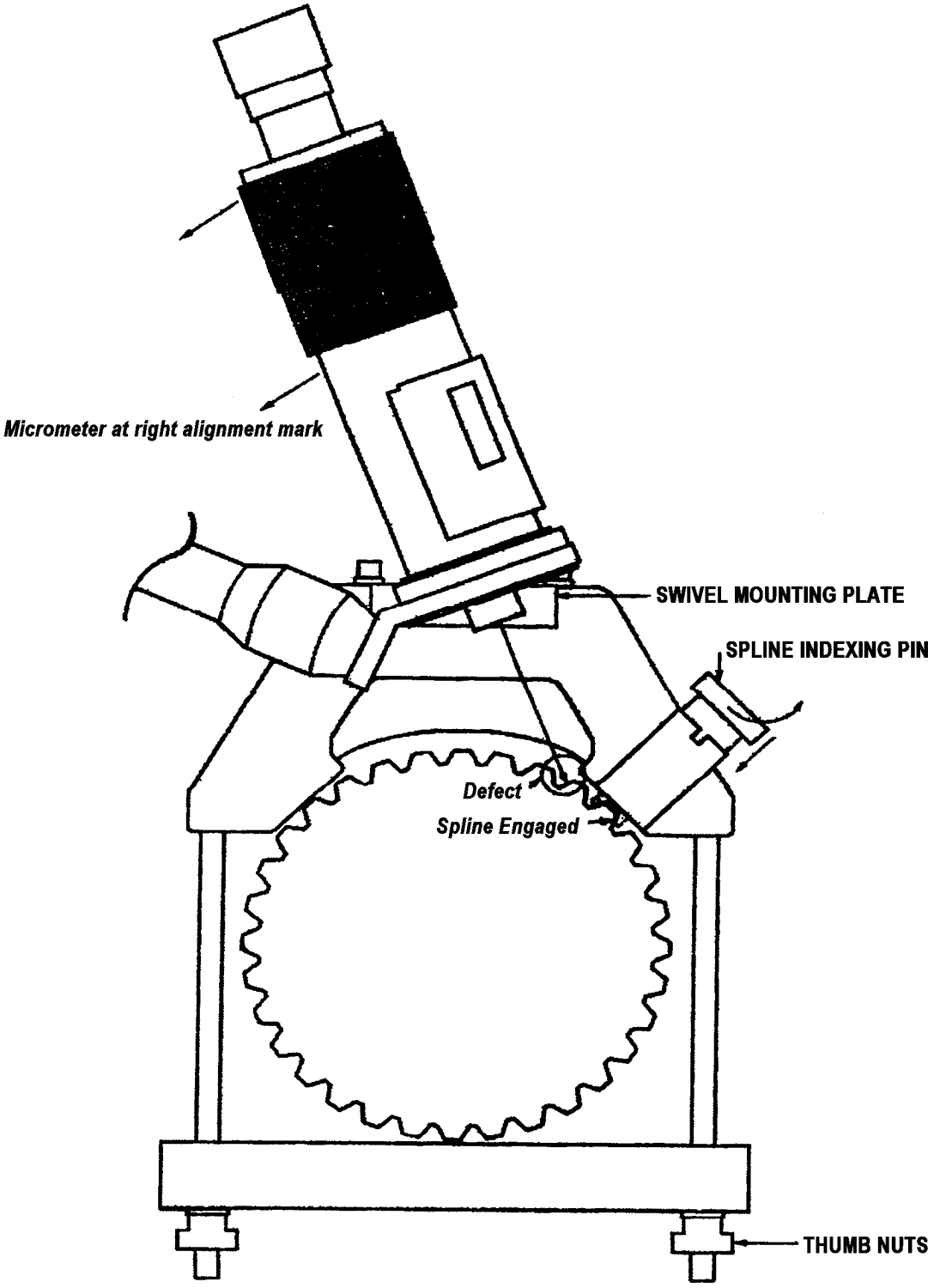

Figure 5. T56-A-427 Propeller Shaft Spline Inspection Using Optical Micrometer

Table 1. Propeller Shaft Inspection Requirements

Condition	Serviceable Limits	Repairable Limits	Disposition
Shallow pitting,(fretting, nicks, grooves, and other surface damage except for cracks) on shaft, splines and journals.	0.003 inch maximum depth. A minimum of 95 percent of the area of each journal and each spline shall be without defect.	Not repairable	Condemn. Tag propeller shaft, mark defect location, and return reduction gearbox to depot maintenance site. Document reason for removal in Module Service Record.
Nicks and dents on any threads.	No nicks or dents allowed.	0.070 inch maximum.	Blend by stoning or polishing. Thread chasing tool shall be used. Blended areas on any thread shall not exceed 10 percent of the circumference of the thread or extend below to minor diameter of the thread.
Cracks	No cracks allowed.	Not repairable	Condemn. Tag propeller shaft, mark defect location, and return reduction gearbox to depot maintenance site. Document reason for removal in Module Service Record.

8. BEARINGS.

9. Removal and Disassembly. Accessory drive ball bearings with pressed steel separators are non–separable.

a. All bearings which are removed from gears or shafts (because of damage or as a disassembly requirement) shall be removed using applicable inner ring puller.

b. Even non–separable accessory drive ball bearings (which appear rough) should be removed using applicable inner ring puller.

CAUTION

Accessory drive ball bearings will become unserviceable by pulling on the outer ring.

c. In some instances it is not possible to remove the roller bearing from the accessory drive shaft by pulling on the outer side of the lip of the inner ring. Removal, therefore, may be facilitated by pulling against the inner side of the lip of the inner ring raceway, using an appropriate puller. Since the method requires prior removal of rollers and separator from the bearing, use care to avoid dropping these components.

d. When a bearing is removed by outer ring pulling, the bearing is not acceptable for continued use and shall be replaced.

10. Cleaning. Clean Bearings per WP 013 00.

11. General Inspection. Inspect all bearings for visible damage. Refer to NAVAIR 01–1A–503 and the following procedures.

Support Equipment Required

Part No./Type Designation	Nomenclature
–––	Scribe, bearing (0.080 in. dia)
–––	Scribe, bearing (0.120 in. dia)
–––	Gloves, plastic

Materials Required

Specification No./Part No.	Nomenclature
A–A–1206	Abrasive, crocus cloth
MIL-PRF-23699	Oil, lubricating
MIL-PRF-680, Type II	Solvent, dry cleaning

CAUTION

The components of a bearing are matched and make up a set identified by the same serial number. Do not intermix components between sets.

Do not contaminate bearings. Handle bearings/components using clean plastic gloves.

a. Visually inspect bearings as follows:

(1) Inspect components for surface defects. No cracks acceptable, reject bearing.

(2) Acceptance of surface defects on bearings listed in table 2 shall be confirmed using applicable bearing scribe. Refer to steps (3) and (4).

(3) Position ball scribe perpendicular with defect and guide scribe over defect using thumb and forefinger. The only weight exerted on the defect should be the weight of the scribe.

(4) If scribe ball moves over the defect smoothly without hang up, the defect is acceptable.If it hangs up, the defect is unacceptable. Reject bearing.

(5) Polish light grooving or scoring and pickup on inactive surfaces of all bearings to remove sharp edges and build-up. Use No. 500 abrasive crocus cloth.

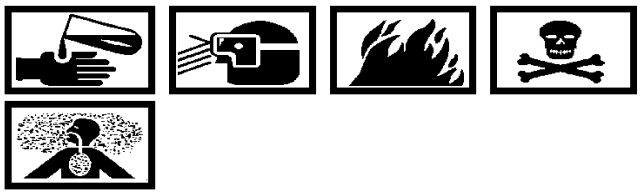

Dry Cleaning Solvent MIL-PRF-680, Type II **3**

Compressed Air **58**

b. Clean bearings with MIL-PRF-680, Type II dry cleaning solvent and dry using filtered compressed air.

Table 2. Bearing Positions and Inspection Scribe Size Radius

Bearing position	Scribe Size Radius
Reduction Gear Accessory Bearings	0.040 in.
Propeller Shaft Roller Bearing	0.060 in.
Propeller Shaft Ball Bearing	0.060 in.
Rear Planet Carrier Bearing	0.060 in.
Main Drive Gear Bearing	0.060 in.
Planet Gear Bearings	0.060 in.

NOTE

Scribe size limits above are reflected in a radius dimension. Scribe will reflect a diameter size ball. For example, 0.120 in. diameter will have a 0.060 in. radius, 0.080 in. diameter will have a 0.040 in. radius, etc.

When correctly used, a scribe of known radius can be used to accept or reject bearings with various surface defects. The scribe should not be firmly grasped, but guided with finger and thumb perpendicular (straight up and down) to the area to be inspected. The only pressure exerted on the defect to be checked should be the weight of the scribe.

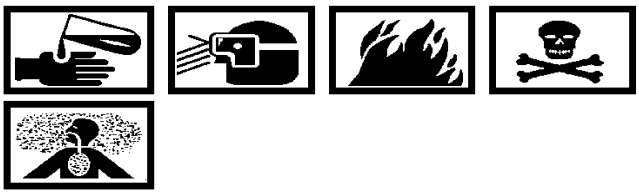

Lubricating Oil, MIL-PRF-23699 **2**

c. Apply light film of MIL-PRF-23699 lubricating oil to bearings and store in closed containers.

12. REAR HOUSING AND (INNER) DIAPHRAGM ASSEMBLY BEARING CAGE INSPECTION.

Support Equipment Required

Part No./Type Designation	Nomenclature
---	Gage, feeler (0.002 in.)

a. Check for loose or improperly seated bearing cages in diaphragm and rear housing as follows:

(1) Apply hand pressure to cage, any movement is cause for rejection of reduction gear assembly.

NOTE

The cages may be tight but not properly seated.

(2) Using a 0.002 in. feeler gage, check full circumference of cage for proper seating to surface.

b. Check the drive in torque of the rear pinion bearing cage studs IAW WP 016 00. Remove lock nuts if the cage is still installed. Do not reuse locknuts.

13. REAR HOUSING AND (INNER) DIAPHRAGM ASSEMBLY INSPECTION AND REPAIR.

NOTE

Rear housing and inner diaphragm are a serialized matched assembly.

a. Visually inspect rear housing and inner diaphragm for cracks.

b. If cracks are suspected, fluorescent penetrant inspect to confirm cracks per WP 014 00.

c. If cracks are found, reject reduction gear assembly.

d. Replace any damaged studs inside the rear housing per WP 015 00.

e. Inspect carrier oil tube bushing in inner diaphragm. If ID is greater than 0.500 in., reject reduction gear assembly.

14. MAIN DIAPHRAGM INSPECTION.

a. Visually inspect main diaphragm for cracks.

b. If cracks are suspected, fluorescent penetrant inspect to confirm cracks per WP 014 00.

c. If cracks are found, reject reduction gear assembly.

15. OIL TUBES INSPECTION.

a. Replace propeller brake oil tube if OD of journals is less than 0.2485 in.

b. Replace carrier oil tube if OD of journals is less than 0.4980 in.

c. Inside of tubes shall be smooth and free from burrs and loose particles.

16. PROPELLER BRAKE INSPECTION.

a. Replace propeller brake assembly when lining shows evidence of uneven wear or the surface of lining is within 0.001 in. of the rivet heads.

b. Cleaning grooves of propeller brake lining is permissible.

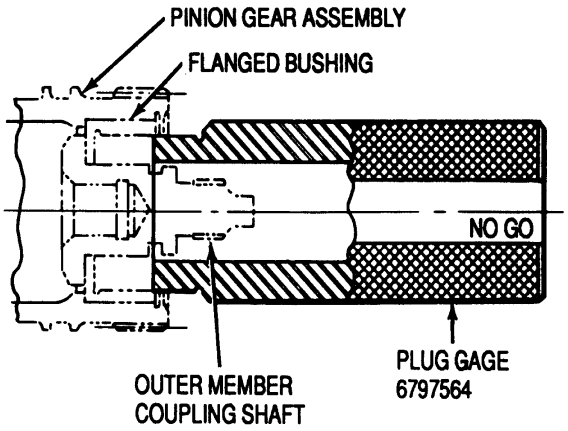

Figure 6. 6797564 Bushing Plug Gage

c. Replace propeller brake assembly when outer member assembly has a ridge or shoulder buildup in the lining at small end of cone.

d. Replace propeller brake assembly when the inner cone has bronze pick-up, slight bluing or scoring.

17. PINION AND ACCESSORY DRIVE GEAR ASSEMBLY AND MAIN DRIVE GEAR INSPECTION.

Support Equipment Required

Part No./Type Designation	Nomenclature
6797564	Gage, bushing plug

a. Inspect the main drive gear in accordance with table 3.

b. If a front or rear pinion bearing failure has occurred with loss or flattening of rollers, paint the main drive gear red and return to depot maintenance site.

c. Inspect the flanged bushing in pinion gear shaft with 6797564 bushing plug gage (figure 6). If gage can be inserted in the bushing, replace pinion and accessory drive gear assembly.

d. Replace coupling outer member shaft if threads are damaged. Refer to paragraph 29, this WP.

e. Visually inspect gears for cracks, chipped, or broken teeth.

f. Main drive gears with molybdenum plasma spray coating. Visually inspect coating for cracks, crazing, loss of coating to base metal, flaking, chipping, nicks, dents, or blisters. Refer to table 3.

g. Reject gear assemblies if inspection limits are exceeded.

18. GEARS AND GEAR SHAFTS INSPECTION. Visually inspect gears for cracks or chipped or broken teeth.

19. REAR CARRIER BEARING SPANNER NUT LOCKPIN RETAINING RING INSPECTION.

a. Inspect for evidence of wear on corners of the 0.350 in. slot.

b. Indentations or wear on flat surface of slot which contacts the pin head are acceptable if less than 0.003 in. deep.

c. Light fretting wear on OD directly opposite the slot is acceptable.

d. An interference fit between pin and retaining ring must be maintained. Refer to WP 040 00.

20. PROPELLER SHAFT THREADS INSPECTION AND REPAIR.

Support Equipment Required

Part No./Type Designation	Nomenclature
6872794	Die, propeller shaft chasing thread

a. Nicks and dents may be reworked by blending or other appropriate method. Use 6872794 thread chasing die as required.

b. The blended areas on any thread shall not exceed 10 percent of circumference of thread or extend below the minor diameter of thread.

21. STRUT INSPECTION AND REPAIR.

Materials Required

Specification No./Part No.	Nomenclature
–––	Paint, aluminum (polytherm)

Table 3. Main Drive Gear Inspection and Repair Limits

Condition	Serviceable Limits	Repairable Limits	Disposition
Gear teeth:			
Cracks or chips.	Not serviceable.	Not repairable.	Reject main drive gear.
Nicks, pits, or dents readily felt with a 0.030 in. scribe.	Not serviceable.	Any amount of damage that can be removed by light hand polishing.	Reject main drive gear.
Uneven wear on gear teeth (fore or aft).	Not serviceable.	Not repairable.	Reject main drive gear.
Corrosion pits on gear tooth root, tip, or face.	Not serviceable.	Any amount of damage that can be removed by light hand polishing.	Reject main drive gear.
Fatigue spalling.	Not serviceable.	Not repairable.	Reject main drive gear.
CAUTION If a front or rear pinion bearing failure has occurred with loss or flattening of rollers, paint the main drive rear red and return to depot maintenance site.			
Failed pinion bearing (front or rear).	Not serviceable.	Not repairable.	Reject main drive gear.
Molybdenum plasma spray coating (on main drive gears without damper rings): missing coating, cracks, crazing, flaking, chipping, nicks, dents or blisters.	Not serviceable.	Not repairable.	Reject main drive gear and return it to Depot for stripping and recoating of plasma spray.

a. Wear fretting, galling, nicks, or dents are acceptable to a depth of 0.010 in. in tubular section and 0.020 in. in non–working surfaces of clevis section after blending.

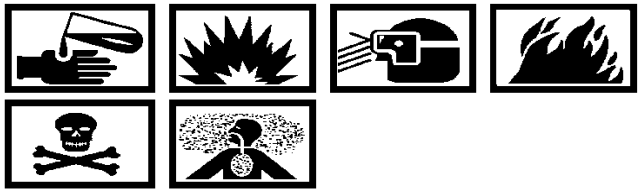

Paint, Aluminum (Polytherm) 39

b. Apply a coat of aluminum polytherm paint to the blended areas and air dry.

c. If hole wear exceeds 0.001 in. at any of the following locations, reject strut.

(1) Rear end of strut, 0.6245 – 0.6255 in. diameter hole.

(2) Front end of strut, 0.6875 – 0.6885 in. and 0.5610–0.5620 in. diameter holes.

d. Tongue slot width that exceeds 0.629 in. is not serviceable, reject strut.

e. Corrosion which cannot be removed by polishing is not acceptable.

22. EYEBOLT INSPECTION.

Materials Required

Specification No./Part No.	Nomenclature
MIL–PRF–3043	Coating, resin

a. The following conditions are not acceptable; condemn eyebolts.

(1) Fretting, galling, or scoring.

(2) Damaged threads.

(3) Corrosion pitting.

b. Tongue thickness less than 0.621 in. is not serviceable, reject eyebolts.

c. Hole diameters that exceed 0.6265 in. are not serviceable, reject eyebolts.

Resin Coating Thermosetting MIL–PRF–3043 40

d. Rust inside eyebolts shall be removed. Polish inside diameter and coat surfaces with MIL–PRF–3043 resin coating.

23. EYEBOLT PIN INSPECTION.

a. The following conditions are not acceptable, condemn pins.

(1) Fretting, galling, or scoring.

(2) Damaged threads.

b. Condemn eyebolt pin if any one of the three locating diameters is less than:

(1) 0.6865 in.

(2) 0.6235 in.

(3) 0.5600 in.

24. STRUT CLEVIS BOLT INSPECTION.

a. The following conditions are not acceptable, condemn bolts.

(1) Fretting, galling, or scoring.

(2) Damaged threads.

b. Condemn bolts if OD is less than 0.6230 in.

25. **REPLACEMENT**.

26. PINION GEAR BEARING REPLACEMENT. Replace both bearings whenever either bearing requires replacement.

Support Equipment Required

Part No./Type Designation	Nomenclature
H913	Hose (Blackhawk)
P–76	Pump, hydraulic (Blackhawk)
23034310	Puller, front bearing (hydraulic)
23034311	Holder, pinion gear assembly
23051179	Case, containment, pinion shaft and puller (use with 23034310)
6796046	Wrench, rear bearing retaining nut
6796253	Support, pinion gear
6796558	Drift, scavenge pump drive gear
6796559	Puller, scavenge pump drive gear
6797897	Wrench, front bearing spanner nut
6797898	Compressor, front bearing outer ring and rollers
6799643–100	Puller, rear bearing (hydraulic)
–––	Wrench, torque (0–600 lb ft)
–––	V–block (2)
–––	Indicator, dial

Materials Required

Specification No./Part No.	Nomenclature
MS24665–151	Pin, cotter (1)
BB–C–104 or equivalent	Ice, dry

a. Remove front bearing retaining nut (figure 7) as follows:

(1) Remove rear bearing outer ring and rollers.

(2) Install pinion shaftgear into 6796253 support.

(3) Remove internal retaining ring and headed pin from ID of scavenge pump drive pinion gear.

(4) Remove retaining nut using 6797897 wrench.

b. Remove scavenge pump drive pinion gear from pinion shaftgear using 6796559 puller (figure 8).

c. Remove pinion shaftgear from support.

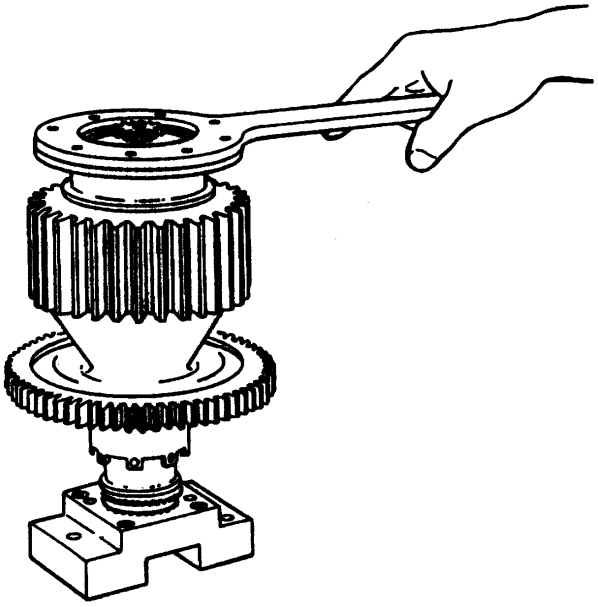

Figure 7. Removing Pinion Shaftgear Front Bearing Nut

d. Install 6797898 compressor onto front bearing (to make bearing concentric) and remove outer ring and rollers. Remove ring and rollers from compressor.

CAUTION

Be sure containment case (tooling) is used to retain pinion shaft when removing front bearing inner ring.

e. Install 23034310 puller on front bearing inner ring. Use 23051179 containment case to retain pinion shaft when pulling bearing inner ring with 23034310 puller .

f. Remove inner ring and match with mating outer ring and rollers (serialized set).

g. Remove rear bearing inner ring (figure 8) as follows:

(1) Install pinion shaftgear into 23034311 holder.

(2) Remove and discard cotter pin from lockpin and nut lug. Remove lockpin.

(3) Remove retaining nut using 6796046 wrench.

(4) Remove pinion shaftgear from holder.

h. Install 6799643–100 puller on rear bearing inner ring. Remove inner ring and match with mating outer ring and rollers (serialized set).

i. Install replacement rear bearing inner ring as follows:

(1) Install assembly in 23034311 holder with rear end up.

WARNING

Heated parts can cause skin damage (burns). Handle heated parts with clean insulated gloves.

(2) Heat rear bearing inner ring to 250°F (121°C) maximum. Refer to WP 016 00.

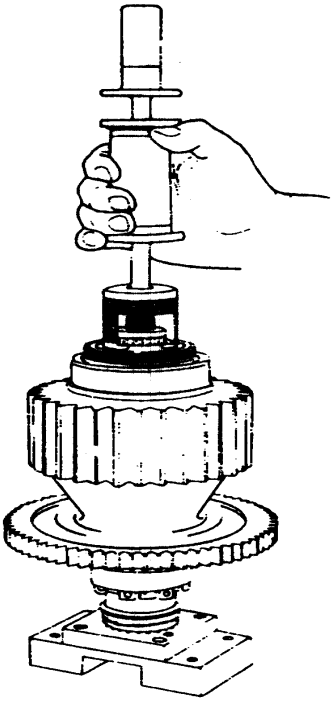

Figure 8. Removing Scavenge Pump Drive Pinion Gear

CAUTION

To be sure the inner ring is completely seated, the bearing retaining nut shall be installed and torqued (to seat ring) before the ring has cooled down.

(3) Install heated inner ring on journal with word FRONT facing forward and chamfered ID facing rearward. Install retaining nut and torque to 300–350 lb ft using 6796046 wrench, allow ring to cool. Loosen to zero torque, torque again to 50 lb ft and then tighten 13–17 degrees to align with pin hole. (QA).

(4) Install lock pin and secure with cotter pin. Bend upper tang up and cut off flush with OD of nut lug. Bend lower tang down under pin head.

(5) Remove assembly from holder.

j. Install replacement front bearing inner ring as follows:

(1) Install assembly in 6796253 support with front end up.

WARNING

Heated parts can cause skin damage (burns). Handle heated parts with clean insulated gloves.

(2) Heat rear bearing inner ring to 250°F (121°C) maximum. Refer to WP 016 00.

CAUTION

To be sure the inner ring is completely seated, the bearing retaining nut shall be installed and torqued (to seat ring) before the ring has cooled down.

(3) Install heated inner ring on journal with flanged end facing rearward. Install retaining nut and torque to 300–350 lb ft using 6797897 wrench, allow ring to cool. Loosen to zero torque, torque again to 50 lb ft then tighten 8–12 degrees to align pin holes. (QA).

(4) Install headed pin and secure with internal retaining ring.

k. Install scavenge pump drive pinion gear as follows:

(1) Install pinion gear in 6796253 support.

(2) Locate maximum runout O–marks on front faces of pinion gear assembly and pump drive pinion gear.

Dry Ice, BB–C–104 **59**

WARNING

Dry ice and super–chilled parts can cause skin damage (freezer–burn). Handle dry ice and super–chilled parts with clean insulated gloves.

(3) Freeze pump drive pinion gear using dry ice.

(4) Install pump drive pinion gear into pinion gear ID as follows:

(a) Install pump drive pinion gear with runout O–mark approximately 180° from pinion gear assembly runout O–mark and pin holes aligned (figure 10).

(b) Use 6796558 drift to seat gear, tap lightly with plastic mallet to make sure gear is seated.

(c) Perform runout check on pitch diameter (PD) of gear.

l. Perform PD runout as follows:

(1) Place pinion gear assembly in two V–blocks (supported on bearings). Set up dial indicator at gear PD. Runout shall be within 0.002 in. FIR.

(2) If runout is acceptable install headed pin and secure with internal retaining ring.

(3) If runout is not acceptable determine and correct cause.

m. Store pinion gear assembly in clean protective container.

27. COUPLING OUTER MEMBER SHAFT REPLACEMENT.

Support Equipment Required

Part No./Type Designation	Nomenclature
6796253	Support, pinion gear assembly
6796558	Drift, scavenge pump drive pinion gear
6796559	Puller, scavenge pump drive gear
–––	Gloves, insulated
–––	V–Block (2)
–––	Indicator, dial

Materials Required

Specification No./Part No.	Nomenclature
AS3085–113	Packing, preformed (1)
BB–C–104 or equivalent	Ice, dry

a. Install pinion shaftgear into 6796253 support.

b. Remove internal retaining ring and headed pin.

c. Remove scavenge pump drive pinion gear from pinion shaftgear using 6796559 puller (figure 9).

d. Remove pinion shaftgear from support.

e. Remove preformed packing and internal retaining ring from coupling outer member shaft. Remove shaft from pinion shaftgear.

f. Install coupling outer member shaft as follows:

(1) Install preformed packing into groove at end of shaft.

(2) Install shaft through ID of pinion gear and secure with external retainer ring. Make sure ring is completely seated.

g. Install scavenge pump drive pinion gear as follows:

(1) Install pinion gear in 6796253 support.

(2) Locate maximum runout O–marks on front faces of pinion gear assembly and pump drive pinion gear.

WARNING

Dry ice and super–chilled parts can cause skin damage (freezer–burn). Handle dry ice and super–chilled parts with clean insulated gloves.

(3) Freeze pump drive pinion gear using dry ice.

(4) Install pump drive pinion gear into pinion gear ID as follows:

(a) Install pump drive pinion gear with runout O–mark approximately 180 degrees from pinion gear assembly runout O–mark and pin holes aligned (figure 10).

(b) Use 6796558 drift to seat gear, tap lightly with plastic mallet to make sure gear is seated.

(c) Perform runout check on pitch diameter (PD) of gear.

h. Perform PD runout as follows:

(1) Place pinion gear assembly in two V–blocks (supported on bearings). Set up dial indicator at gear PD. Runout shall be within 0.002 in. FIR.

(2) If runout is acceptable install headed pin and secure with internal retaining ring.

(3) If runout is not acceptable determine and correct cause.

i. Store pinion gear assembly in clean protective container.

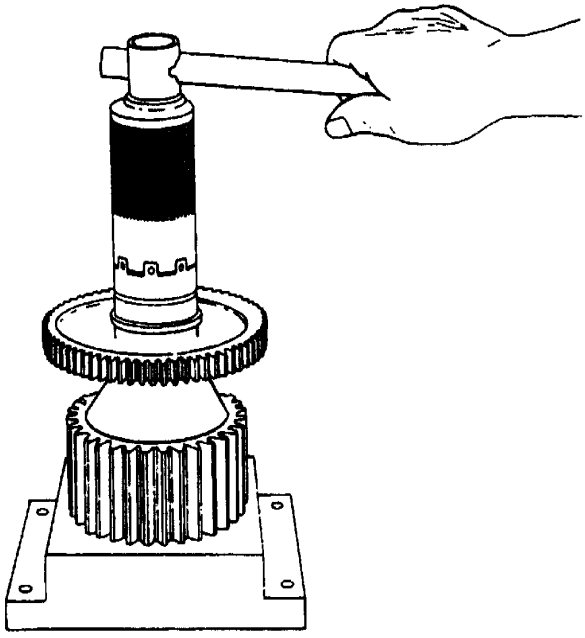

Figure 9. Removing Pinion Shaftgear Rear Bearing Spanner Nut

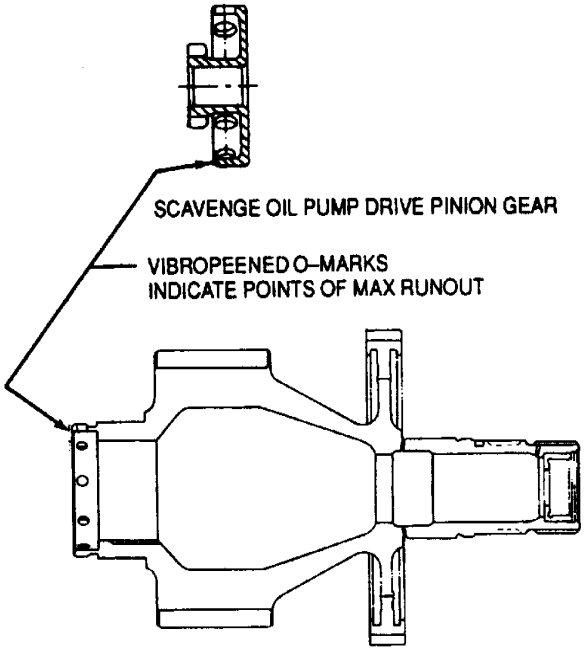

Figure 10. Pinion Shaftgear and Scavenge Pump Drive Pinion Gear Maximum Runout O–mark Locations

INTERMEDIATE MAINTENANCE

ASSEMBLY

REDUCTION GEAR UNIT ASSEMBLY

Reference Material

Standard Practices – Assembly and Disassembly . . . . . WP 016 00
Reduction Gear Unit Assembly with Safety Coupling Assembly and Torquementer Unit – Removal and Installation . . . . . WP 027 00
Torquemeter Unit and Safety Coupling Assembly – Removal and Installation . . . . . WP 028 00
Propeller Shaft Oil Seal – Removal and Installation . . . . . WP 034 00
Propeller Shaft Plug – Removal and Installation . . . . . WP 035 00
Reduction Gear Housing Plugs and Pressure Relief Valve – Maintenance . . . . . WP 037 00
Reduction Gear Unit – Disassembly . . . . . WP 038 00
Illustrated Parts Breakdown, T56–A–427 Turboprop Engine . . . . . NAVAIR 02B–5DG–4

Alphabetical Index

Subject Page No.
Front Housing External Components Installation 41
Propeller Control Linkage Installation 41
Reduction Gear Strut Installation 41
General 3
Handling Heated and Super–Chilled (Frozen) Parts 4
Propeller Shaft Axial Movement (End Play) Check 40
Rear Housing External Components Installation 38
Accelerometer (Electric Piezo) and Mounting Bracket Installation 40
Mounting Pad Cover Installation 38
Oil Pressure Relief Valve Assembly Installation 40
Oil Pump and Filter Assembly Installation 39
Scavenge Oil Outlet Magnetic Plug Body Assembly Installation 40
Rear Housing Installation 36

Alphabetical Index (Cont)

Subject Page No.

Reduction Gear Assembly Plugs 40
Reduction Gear Front Housing Assembly 27
Main and Nose Scavenge Pump Assemblies Installation 27
Main Diaphragm Assembly Installation 32
Main Drive Gear and Sun Gear Installation 33
Pinion Gear Installation 33
Propeller Shaft Installation 28
Rear Carrier Bearing Inner Ring Installation 28
Reduction Gear Rear Housing and (Inner) Diaphragm Assembly 10
Alternator Drive Gear Assembly Installation 21
Bearing Bore Alignment Check 26
Generator Shaft and Hydraulic Pump Drive Gear Installation 16
Hydraulic Pump Drive Gear Assembly Installation 20
Hydraulic Pump Drive Idler Gear Installation 18
Hydraulic Pump Idler Gear Installation 19
Oil Pump Drive Gear Installation 11
Oil Pump Idler Gear Installation 10
Propeller Brake, Main Idler Gear, and Inner Diaphragm Installation 21
Tachometer Drive Gears Installation 12
Tachometer Drive Idler Gear Installation 14
Reduction Gear Stands 4
Reduction Gear Unit Assembly Transport and Storage 41
Spanner Nut Face Lapping and Cup Washer Installation 4
Cup Washer Installation 4
Spanner Nut Face Lapping 4

Record of Applicable Technical Directives

Type/No.	Date	Title and ECP No.	Date Inc.	Remarks
PPC–112 Am 1	31 Oct 97	Redesigned Prop Shaft Oil Seal, Installation of (ECP No. 2080R1–ATP 20071)	15 Dec 90	–––

1. **GENERAL.**

Materials Required

Specification No./Part No.	Nomenclature
MIL–PRF–23699	Lubricating Oil
Permatex 1372 or Loctite 30588	Compound, sealing

CAUTION

Do Not use 3M EC–776 as a sealing compound on reduction gear assembly.

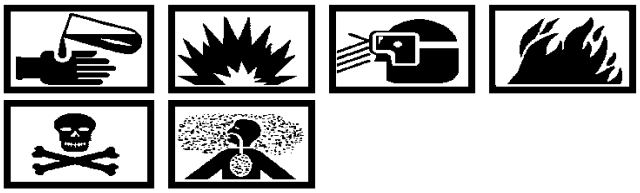

Sealing Compound Permatex No. 1372 or Loctite 30558 **34**

NOTE

If jack screw holes were used, install 0.250–28 socket head screws coated with Permatex 1372 or Loctite 30588 to prevent leakage.

Reduction Gear Assemblies are identified with matched set serial numbers, (Set S/N) on the front housing, rear housing, main diaphragm and inner diaphragm.

a. Check all gear trains for sufficient backlash to permit the entire train to turn freely.

b. Throughout the assembly procedure, check all accessible shafts by hand, for end clearance of 0.003 inch minimum unless otherwise specified. Use standard dial indicator and weighted base, take readings on the face of shafts. Replace parts if necessary to get proper end clearance. (QA)

c. Avoid interference fit of gears, spacers and pinions to drive shafts to prevent galling.

Lubricating Oil, MIL–PRF–23699 **2**

d. Unless otherwise specified, lubricate the entire inside of the reduction gear assembly, pump filters and connections with MIL–PRF–23699 lubricating oil.

e. Use MS20995C32 (0.032 in. diameter) lockwire unless otherwise specified.

f. Refer to standard practices (WP 016 00) for torquing, lockwiring and cup washer installation procedures.

g. Because of the location and large number of reduction gear assembly fit limits and assembly torques, illustrations and tables are included to cover these aspects of assembling the reduction gear.

h. The fit limits define the correct dimensional relationship between mated parts. Use these limits as a guide when replacing or determining serviceability of parts. The letters “L” and “T” indicate a loose or tight fit. Tolerances are shown in the “Minimum” and “Maximum” columns. A 0.000 value is to be considered a tight fit.

i. The limits specified for circumferential fits between ID and OD of two parts are based on the difference between machined, true circle diameters on the two parts. Therefore, when inspecting and measuring used parts to determine assembly fit condition, an average diameter must be established if an out–of–round condition exists.

Lubricating Oil, MIL–PRF–23699 **2**

j. All torques are lb. in. (pound inches) unless otherwise specified. The torque is established using MIL–PRF–23699 lubricating oil unless otherwise specified. Threads must be free of burrs or nicks and turn freely without binding.

k. Treat all socket–head screws as bolts. Generally, if a part requires the use of a wrench, treat it as a bolt. If the part requires the use of a screwdriver, treat it as a screw. All set screws, regardless of head type, require a screw torque to prevent set tip damage.

2. **SPANNER NUT FACE LAPPING AND CUP WASHER INSTALLATION.**

3. CUP WASHER INSTALLATION.

NOTE

The dimple of an installed cup washer was unlocked by the turning action of the wrench during removal of the spanner nut.

a. Re–use of a cup washer is permitted provided that any remaining portion of the previous dimple has been completely re–formed to the washer wall contour and no splits or tears exist. Complete re–forming of the old dimple is necessary to eliminate the possibility of the nut/wrench making contact with the dimple. If not completely reformed, metal chips can be generated when the nut/wrench contacts the dimple area during assembly.

CAUTION

Impact–type dimpling (such as use of a punch/drift and hammer) is not permitted. This method tends to brinell (harden) the bearing.

b. Dimple used cup washers in an area not previously dimpled and new washers in any area. Dimple the washer into a scallop cutout of the nut using the fixture specified in the applicable assembly procedure. Do not dimple washer into a nut wrenching slot.

4. SPANNER NUT FACE LAPPING. The following procedure is applicable to new and used spanner nuts.

Support Equipment Required

Part No./Type Designation	Nomenclature
–––	Plate, surface
–––	Gloves, Insulated

Materials Required

Specification No./Part No.	Nomenclature
A–A–1206	Abrasive, Crocus cloth
MIL–PRF–23699	Oil, lubricating
BB–C–104 or equivalent	Dry Ice

a. The faces of used spanner nuts shall be lightly lapped to remove any high metal resulting from scratches, dents, and nicks. The faces of new nuts shall be lightly lapped to remove high spots in black oxide coating.

b. Lap nut faces using a flat smooth surface plate and A–A–1206 crocus cloth dampened with MIL–PRF–23699 oil. Lap 15–20 strokes using a Figure–8 pattern.

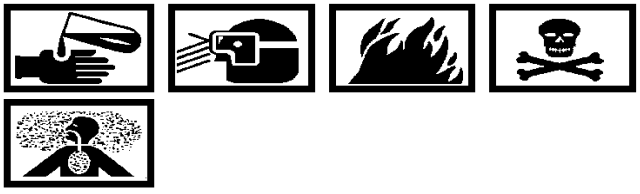

Lubricating Oil, MIL–PRF–23699 2

c. Wipe nut clean after lapping using clean shop rag dampened with MIL–PRF–23699 lubricating oil.

Dry Ice, BB–C–104 59

5. **HANDLING HEATED AND SUPER–CHILLED (FROZEN) PARTS.**

a. Handle dry ice and super–chilled parts with clean insulated gloves to prevent skin damage (freezer burn) and contamination of parts, especially bearing components.

b. Handle heated parts with clean insulated gloves to prevent skin damage (burns) and contamination of parts, especially bearing components.

6. **REDUCTION GEAR STANDS.**

a. Refer to WP 038 00 for installation of reduction gear unit or reduction gear rear housing in the turnover stands.

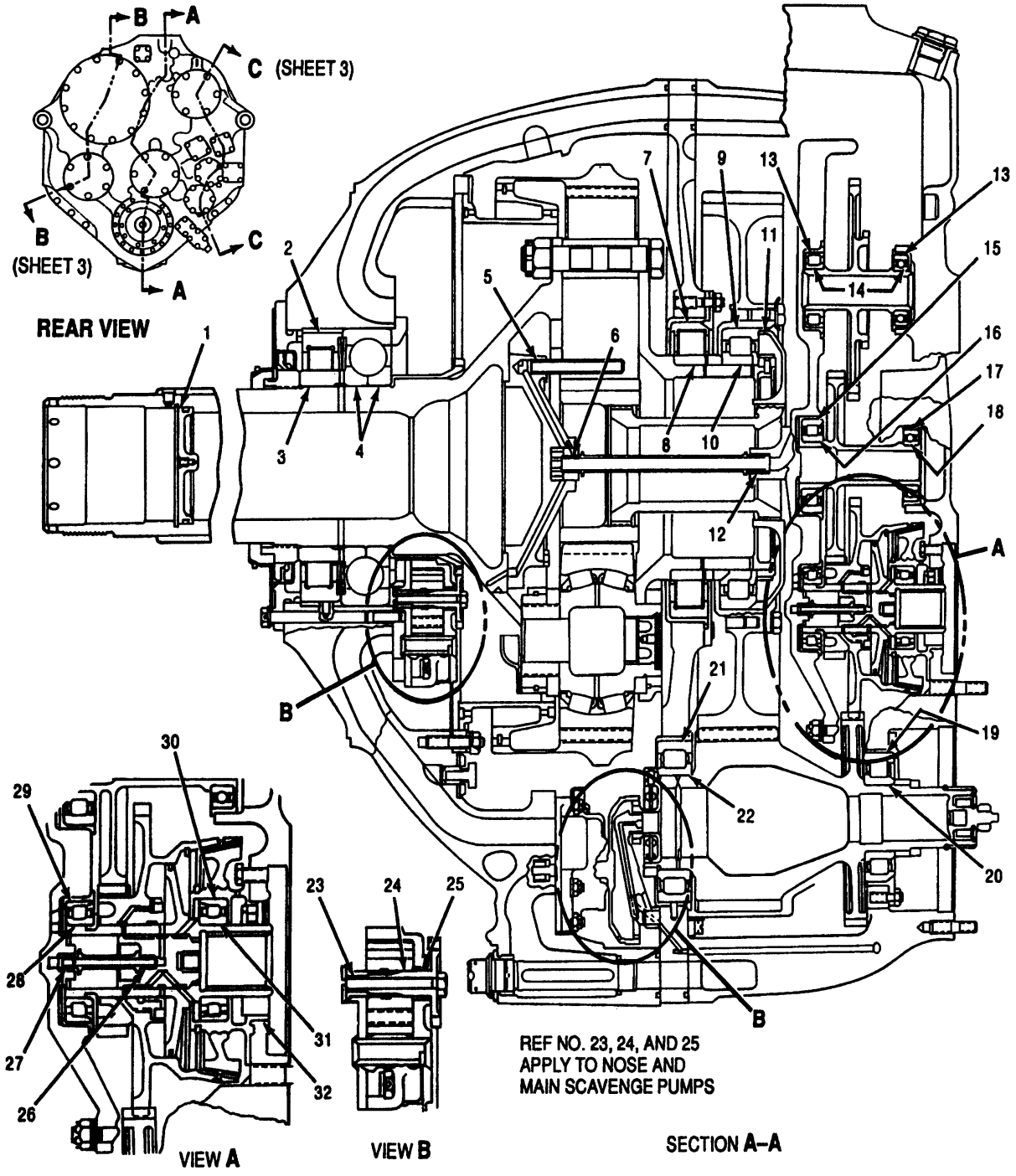

Figure 1. Reduction Gear Assembly Fit Limits (Sheet 1 of 4)

Ref. No.	Description	Minimum	Maximum
1	Plug–Propeller Shaft	0.0010L	0.0080L
2	Roller Bearing–Cage	0.0004L	0.0036L
3	Roller Bearing–Propeller Shaft	0.0015T	0.0005L
4	Ball Bearing–Propeller Shaft	0.0015T	0.0005L
5	Tube–Flange	0.0010T	0.0005L
6	Tube–Bushing	0.0005L	0.0030L
7	Bearing–Cage	0.0002L	0.0036L
8	Bearing–Rear Carrier	0.0011T	0.0008L
9	Bearing (out–of–round) – Gear (main drive)	0.0030L	0.0054L
10	Bearing–Rear Carrier	0.0005T	0.0010L
11	Sun Gear Hub Flange–Gear (main drive)	0.0003T	0.0025L
12	Tube–Bushing	0.0005L	0.0030L
13	Bearing–Cage (2 places)	0.0001T	0.0024L
14	Bearing–Gear (hydraulic pump idler)	0.0009T	0.0000
15	Bearing–Cage	0.0001T	0.0020L
16	Bearing–Gear (main idler)	0.0010T	0.0000
17	Bearing–Cage	0.0001T	0.0020L
18	Bearing–Gear (main idler)	0.0009T	0.0000
19	Bearing–Cage	0.0029L	0.0060L
20	Bearing–Pinion Shaftgear (rear)	0.0018T	0.0008T
21	Bearing (out–of–round) – Cage	0.0027L	0.0060L
22	Bearing–Pinion Shaftgear (front)	0.0031T	0.0016T
23	Drive Shaftgear–Scavenge Pump Plate (bushing)	0.0010L	0.0040L
24	Drive Shaftgear–Scavenge Pump Drive Gear	0.0005L	0.0025L
25	Drive Shaftgear–Scavenge Pump Body (bushing)	0.0010L	0.0040L
26	Tube–Plug	0.0005L	0.0040L
27	Tube–Inner Diaphragm	0.0005L	0.0040L
28	Bearing–Starter Shaft (front)	0.0007T	0.0004L
29	Bearing–Cage	0.0001T	0.0029L
30	Bearing–Flange	0.0001T	0.0021L
31	Bearing–Starter Shaft (rear)	0.0007T	0.0004L
32	Flange–Housing	0.0020T	0.0000

Figure 1. Reduction Gear Assembly Fit Limits (Sheet 2)

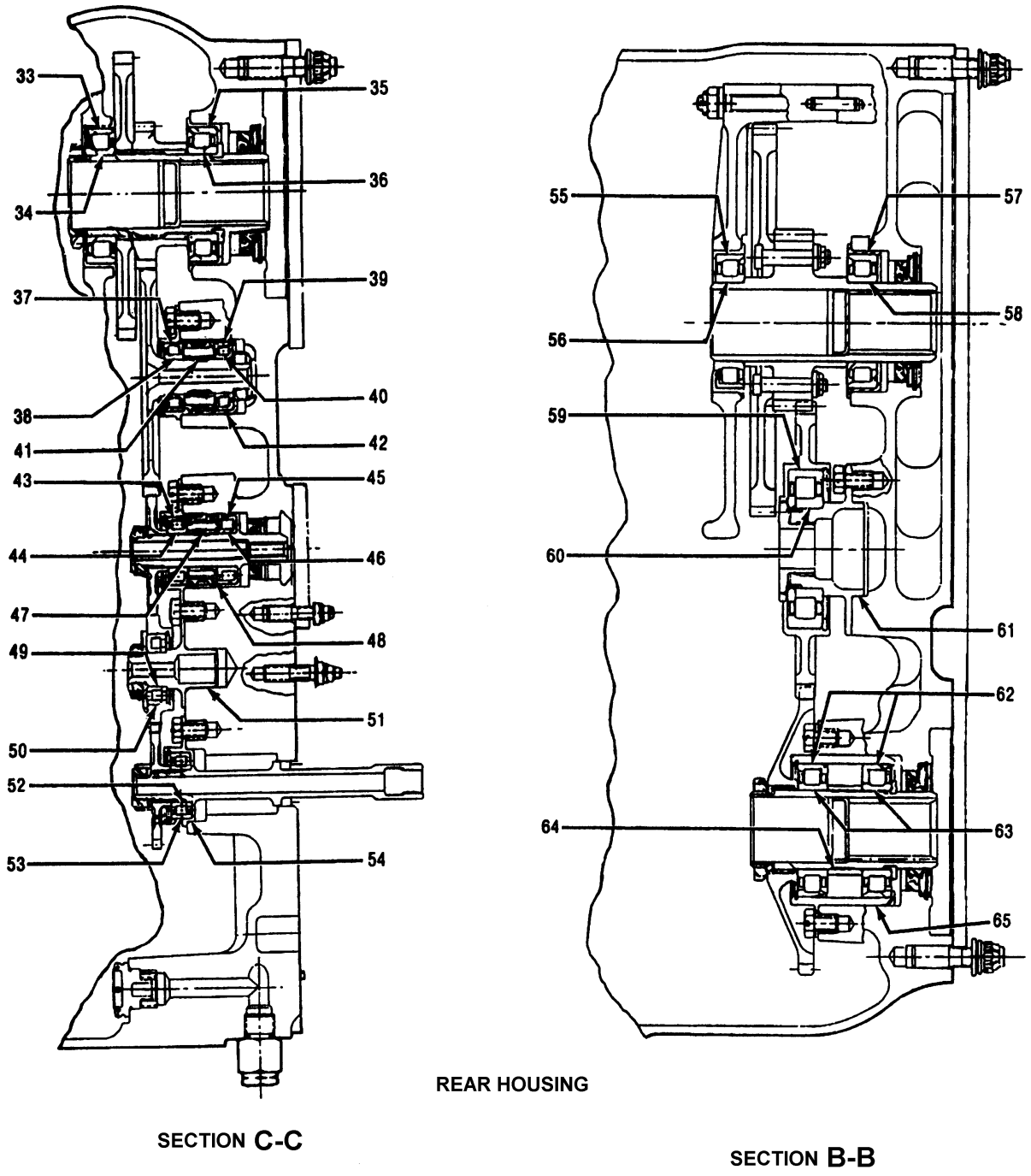

Figure 1. Reduction Gear Assembly Fit Limits (Sheet 3)

Ref. No.	Description	Minimum	Maximum
33	Bearing–Cage (diaphragm)	0.0001T	0.0029L
34	Bearing–Shaft (hydraulic pump drive gear)	0.0006T	0.0010L
35	Bearing–Cage (housing)	0.0001T	0.0029L
36	Bearing–Shaft (hydraulic pump drive gear)	0.0006T	0.0010L
37	Bearing–Cage	0.0001T	0.0010L
38	Bearing–Gear (tachometer drive idler)	0.0004T	0.0005L
39	Bearing–Cage	0.0001T	0.0010L
40	Bearing–Gear (tachometer drive idler)	0.0004T	0.0005L
41	Spacer–Gear (tachometer drive idler)	0.0015L	0.0050L
42	Cage–Housing	0.0000	0.0040L
43	Bearing–Cage (2 places)	0.0001T	0.0010L
44	Bearings–Shaft (tachometer drive gear) (2 places)	0.0004T	0.0005L
45	Bearing–Cage (2 places)	0.0001T	0.0010L
46	Bearings–Shaft (tachometer drive gear) (2 places)	0.0004T	0.0005L
47	Spacer–Shaft (tachometer drive gear) (2 places)	0.0015L	0.0050L
48	Cage–Housing	0.0000	0.0040L
49	Bearing–Journal (oil pump drive idler gear)	0.0000	0.0008L
50	Bearing–Gear (oil pump drive idler gear)	0.0006T	0.0006L
51	Journal (oil pump drive idler gear) – Housing	0.0000	0.0040L
52	Bearing–Shaft (oil pump drive gear)	0.0004T	0.0005L
53	Bearing–Cage	0.0001T	0.0010L
54	Cage–Housing	0.0000	0.0040L
55	Bearing–Cage	0.0001T	0.0025L
56	Bearing–Shaft (alternator drive)	0.0012T	0.0002L
57	Bearing–Cage	0.0001T	0.0020L
58	Bearing–Shaft (alternator drive)	0.0012T	0.0002L
59	Bearing–Flange (generator idler bearing)	0.0001T	0.0008L
60	Bearing–Gear (hydraulic pump drive idler alternate)	0.0001T	0.0010L
61	Flange (generator idler bearing) – Housing	0.0000	0.0040L
62	Bearings–Cage	0.0001T	0.0020L
63	Bearings–Shaft (generator drive gear)	0.0006T	0.0010L
64	Spacer–Shaft (generator drive gear)	0.0005L	0.0040L
65	Cage–Housing	0.0000	0.0060L

Figure 1. Reduction Gear Assembly Fit Limits (Sheet 4)

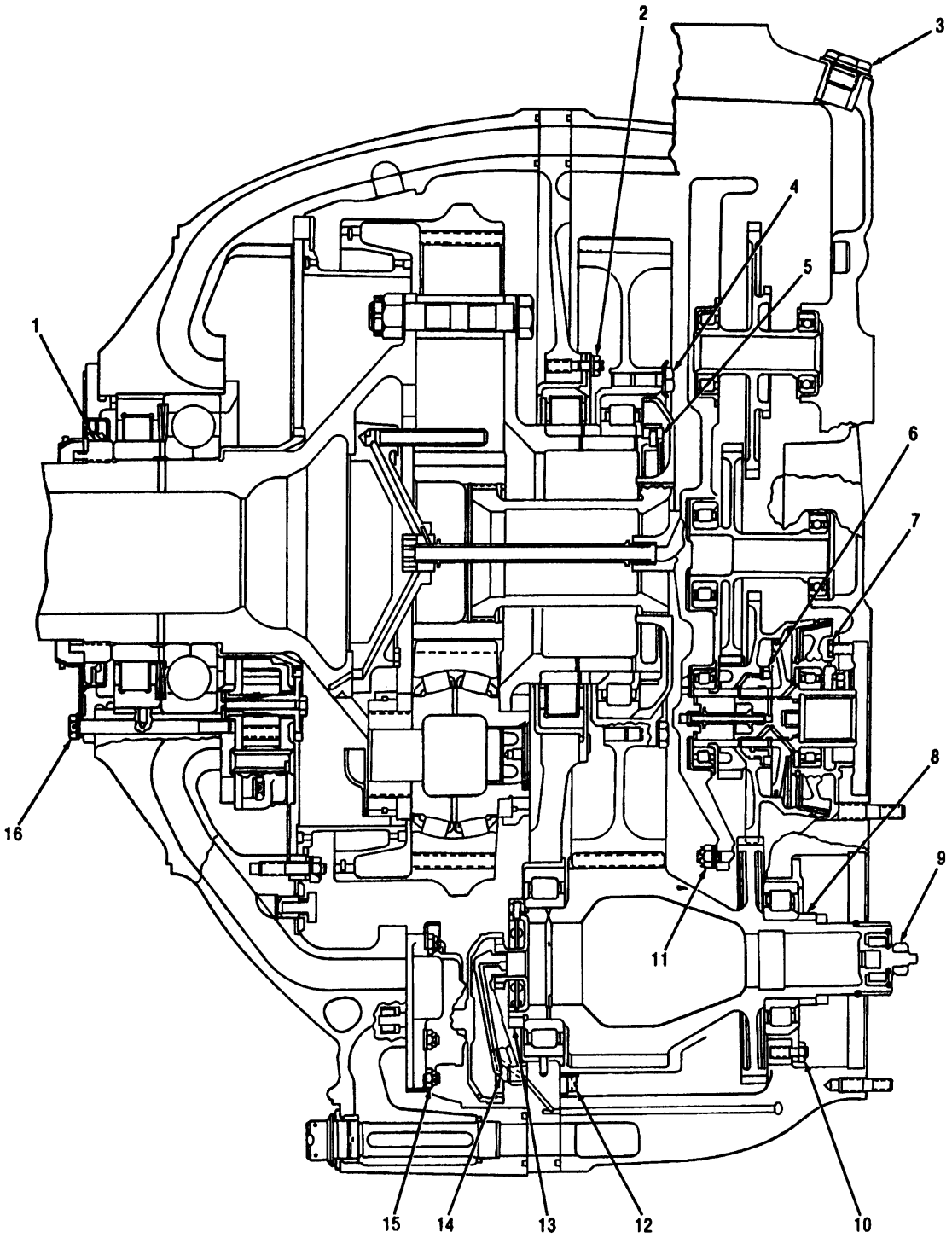

Figure 2. Reduction Gear Assembly Torque Limits (Sheet 1 of 2)

Ref. No.	Description	Minimum (pound inches)	Maximum (pound inches)
1	Nut, Thrust Bearing (8 places)	Torque to 1000 lb. ft. Loosen to zero, then 12° to 15° past fingertight.	
2	Nut, (8 places) Segment Plate	74	89
3	Plug	240	300
4	Bolt (20 places), Sun Gear Hub Flange	Torque to 385–425. Loosen to zero, then 385–425.	
5	Nut, Retaining, Rear carrier Rear Bearing	Torque to 600 lb. ft, then increase in tightening direction to align next lock pin hole.	
6	Nut, Propeller Brake Outer Member	Torque to 150 lb. ft. Loosen to zero, then 120–150 lb. ft.	
7	Bolt (6 places), Starter Shaft Bearing Flange	70	85
8	Nut, Retaining, Pinion Gear Rear Bearing	Refer to Bearing Replacement, WP 044 00.	
9	Nut, Safety Coupling	Fingertight.	
10	Nut (7 places)	90	100
11	Nut (13 places)	140	180
12	Screw, Pinion Oil Baffle (4 places)	50	58
13	Nut, Retaining, Pinion Gear Front Bearing	Refer to Bearing Replacement, WP 044 00.	
14	Screw, Oil Jet Nozzle	50	58
15	Nut (6 places), Main Scavenge Pump	70	85
16	Bolt (8 places), Nose Plate	Torque to 50–75 in sequence 180° apart. Torque again to 90–100 in same sequence.	

Figure 2. Reduction Gear Assembly Torque Limits (Sheet 2)

7. **REDUCTION GEAR REAR HOUSING AND (INNER) DIAPHRAGM ASSEMBLY.**

8. OIL PUMP IDLER GEAR INSTALLATION.

NOTE

Reduction Gear Assemblies are identified with matched set serial numbers, (Set S/N) on the front housing, rear housing, main diaphragm and inner diaphragm.

Support Equipment Required

Part No./Type Designation	Nomenclature
6796206	Puller plate, tachometer drive shaft bearings.
6796250	Support, bearing removal
---	Wrench, torque (0–150 lb in.)

Materials Required

Specification No./Part No.	Nomenclature
MS20995C32	Lockwire
*6829061	Washer, cup (1)

*Required when serviceable used washer is not available.

a. Rotate rear housing, forward side up.

CAUTION

Be sure that all bearing cages are properly seated.

b. Install bearing (2, figure 3) inner ring on idler gear journal (1) using 6796250 support and 6796206 puller plate (figure 4). (QA)

c. Install idler gear journal (1, figure 3) and inboard tachometer gear bearing cage (1, figure 6). Install oil tube support bracket (8, figure 3) between the top bolt of idler gear journal and bottom bolt of tachometer gear bearing cage with tab facing 12 o'clock position. Install remaining two bolts in journal and cage. Torque bolts 70–85 lb in. and lockwire. (QA)

d. Install bearing (2) outer ring and rollers in idler gear (3) and insert snap ring (4). (QA)

e. Install the idler gear and bearing outer ring and rollers over the bearing inner ring. Install the forward portion of the inner ring. Retaining ring (4) side goes toward journal (1). (QA)

CAUTION

Do not dimple a re–used cup washer in same area as old dimple. Do not use a split or torn cup washer or one that no longer has a remaining unused lip area for dimpling.

f. Install cup washer (6) and end slotted spanner nut (7) finger tight. (QA)

9. OIL PUMP DRIVE GEAR INSTALLATION (figure 5)

Support Equipment Required

Part No./Type Designation	Nomenclature
6796206	Puller plate, tachometer drive shaft bearings.
6796250	Support, bearing removal
–––	Wrench, torque (0–150 lb in.)

Materials Required

Specification No./Part No.	Nomenclature
MS20995C32	Lockwire
*6829061	Washer, cup (1)

*Required when serviceable used washer is not available.

a. Install the bearing cage (1, figure 5) in rear housing using two bolts (6). Torque the bolts to 70–85 lb in. and secure with lockwire. (QA)

b. Install bearing (2) inner ring on drive shaft (3) using 6796250 support and 6796206 puller plate (See figure 4). Seat firmly. (QA)

NOTE

The front portion of inner ring is not installed at this time.

c. Install bearing (2, figure 5) outer ring and rollers over inner ring. (QA)

d. Install front portion of inner ring (9).

e. Install drive shaft and bearing assembly into cage (1). Install snap ring (4). Seat bearing outer ring firmly. (QA)

NOTE

Support drive shaft from aft side of rear housing to prevent shaft from falling through housing until drive gear and spanner nut is installed.

f. Install drive gear (5) on drive shaft (3). (QA)

1. Oil Pump Drive Idler Gear Journal
2. Bearing
3. Pump Drive Idler Gear
4. Internal Retaining Ring
5. Bolt
6. Cup Washer
7. End Slotted Spanner Nut
8. Tachometer Bearing Oil Tube Support Bracket

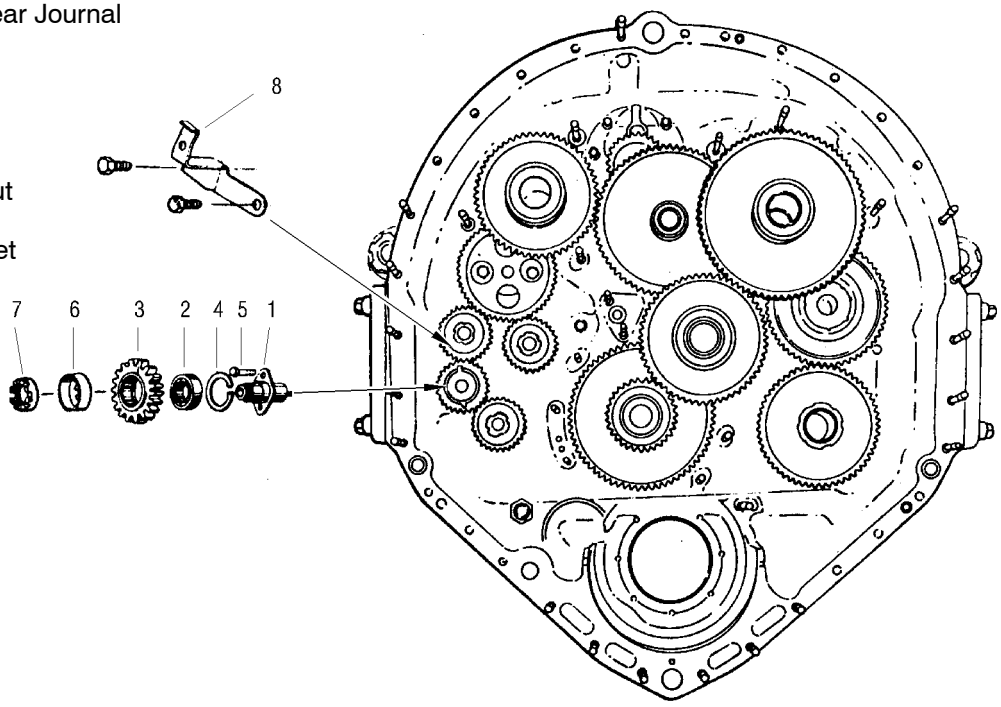

Figure 3. Oil Pump Drive Idler Journal and Gear Details

CAUTION

Do not dimple a re–used cup washer in same area as old dimple. Do not use a split or torn cup washer or one that no longer has a remaining unused lip area for dimpling.

g. Install cup washer (7) and end slotted spanner nut (8) fingertight. (QA)

10. TACHOMETER DRIVE GEARS INSTALLATION. (TWO PLACES.) (figure 6)

Support Equipment Required

Part No./Type Designation	Nomenclature
–––	Wrench, torque (0–150 lb in.)
–––	Gloves, insulated

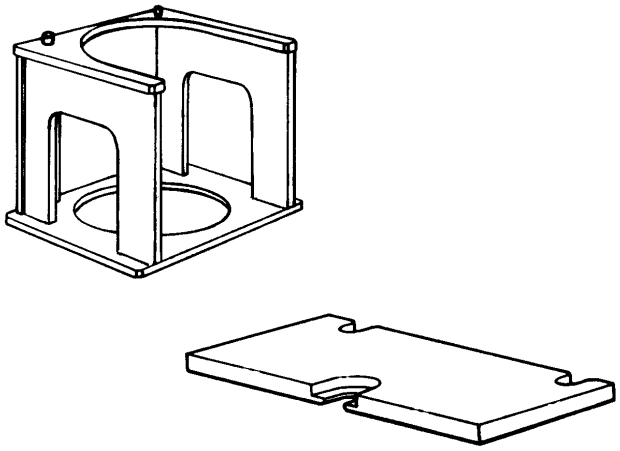

Figure 4. 6796250 Bearing Removal Support and 6796206 Tachometer Drive Shaft Bearing Puller Plate

1. Bearing Cage
2. Bearing
3. Oil Pump Drive Shaft
4. Internal Retaining Ring
5. Oil Pump Drive Gear
6. Bolt
7. Cup Washer
8. End Slotted Spanner Nut
9. Inner Ring, Front Portion

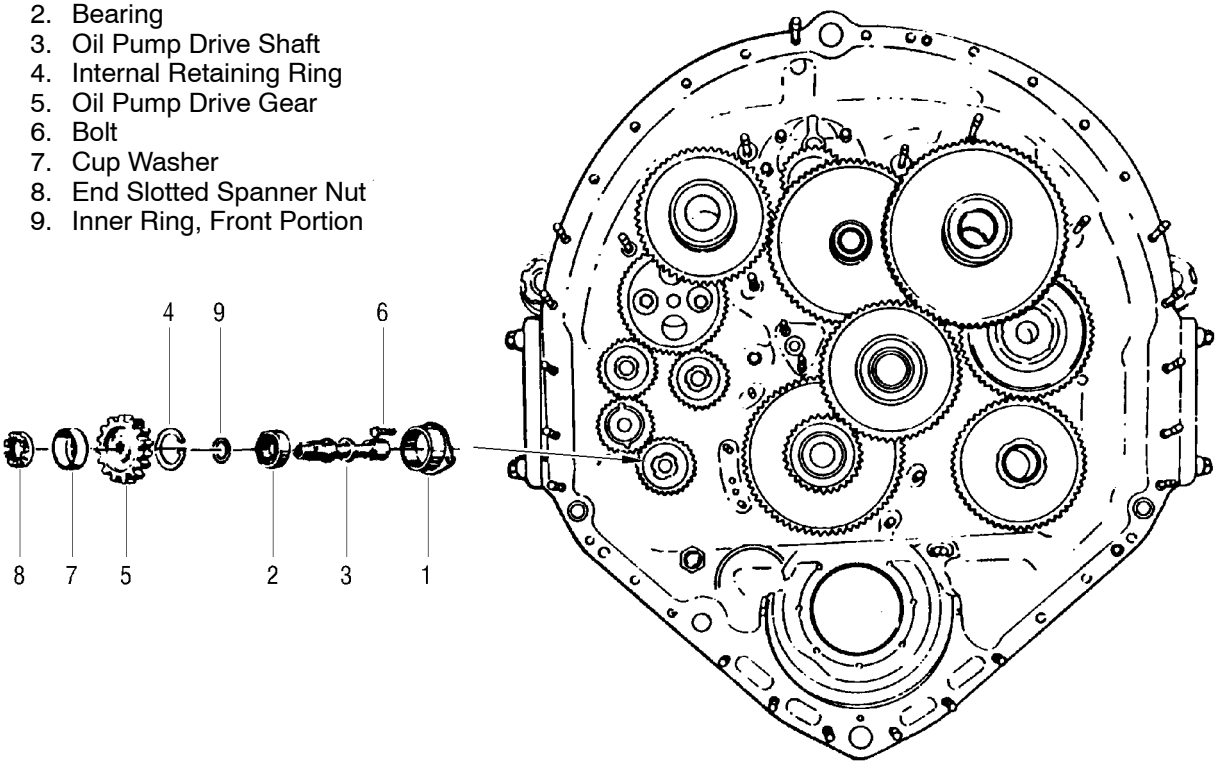

Figure 5. Oil Pump Gear Details

Materials Required

Specification No./Part No.	Nomenclature
BB–C–104 or equivalent	Dry Ice
MIL–PRF–23827	Grease, lubricating
*6829061	Washer, cup (2)

*Required when serviceable used washer is not available.

NOTE

The inboard bearing cage and tachometer bearing oil tube support bracket were installed when the oil pump drive idler journal was installed.

a. Install outboard bearing cage (1, figure 6) in rear housing using two bolts (2). Torque to 70–85 lb in. and secure with lockwire. (QA)

Dry Ice, BB–C–104 **59**

WARNING

Dry ice and super–chilled or heated parts will cause skin damage (burns or freezer burns). Use clean insulated gloves to handle ice and parts.

b. Install rear bearing (5) inner rings, spacers (6) and 7 and front bearing (8) inner rings on shafts (4) and seat firmly. If excessive interference is experienced, either chill the drive shaft or heat the bearings per WP 016 00. (QA)

c. Install rear bearing (5) outer rings and rollers to the inner rings. (QA)

1. Bearing Cage
2. Bolt
3. Tachometer Bearing Oil Tube Support Bracket
4. Tachometer Drive Shaft Assembly
5. Roller Bearing
6. Bearing Inner Ring Spacer
7. Bearing Outer Ring Spacer
8. Roller Bearing
9. Internal Retaining Ring
10. Tachometer Drive Gear
11. Cup Washer
12. End Slotted Spanner Nut

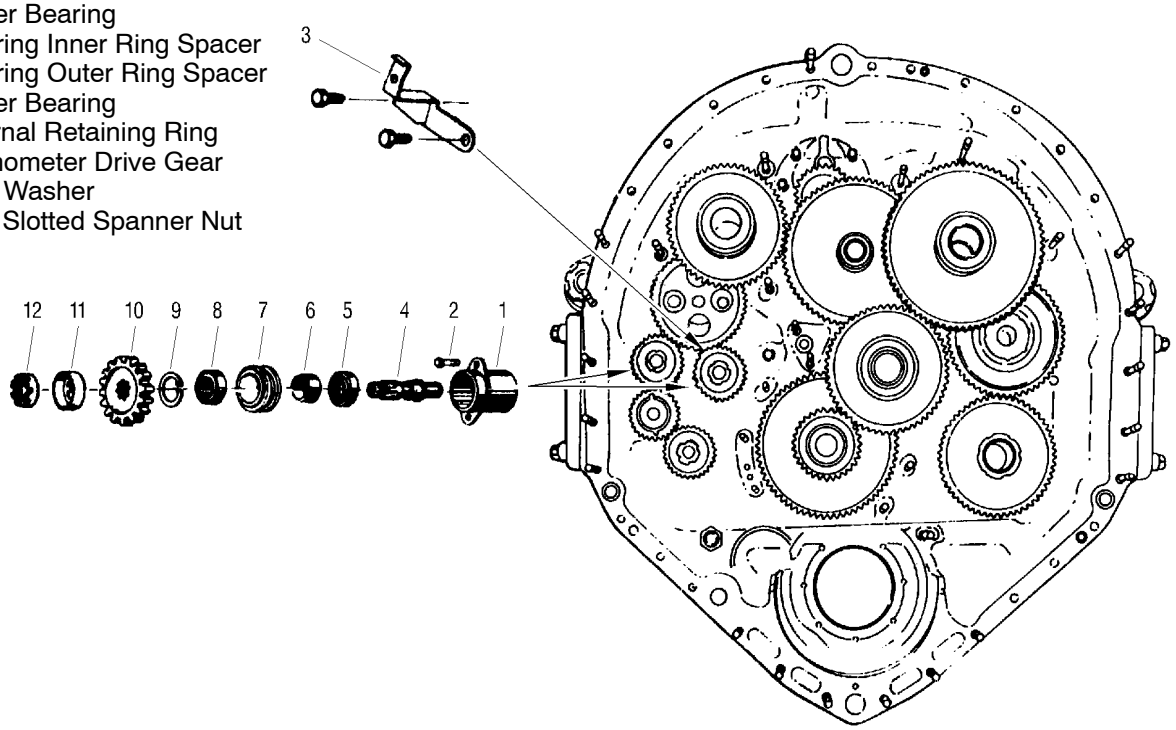

Figure 6. Tachometer Drive Gear Details

d. Install shaft and bearing in bearing cage. Seat outer rings of rear bearings firmly against shoulder of cage. Install front bearing outer ring and rollers on inner ring and into bearing cage. Seat firmly. Install internal retaining ring (9) in place (Sharp edge outward). (QA)

General Purpose Grease MIL–PRF–23827 18

NOTE

Apply MIL–PRF–23827 grease to OD of the drive shaft for installation into the seal.

e. Install drive gears (10) on shafts (4) with long hub seated against front bearings. (QA)

CAUTION

Do not dimple a re–used cup washer in same area as old dimple. Do not use a split or torn cup washer or one that no longer has a remaining unused lip area for dimpling.

f. Install cup washers (11) and end slotted spanner nuts (12) fingertight. (QA)

1. Internal Retaining Ring
2. Tachometer Drive Idler Gear
3. Roller Bearings
4. Bearing Outer Ring Spacer
5. Bearing Inner Ring Spacer
6. Cup Washer
7. End Slotted Spanner Nut
8. Bearing Cage
9. Bolt

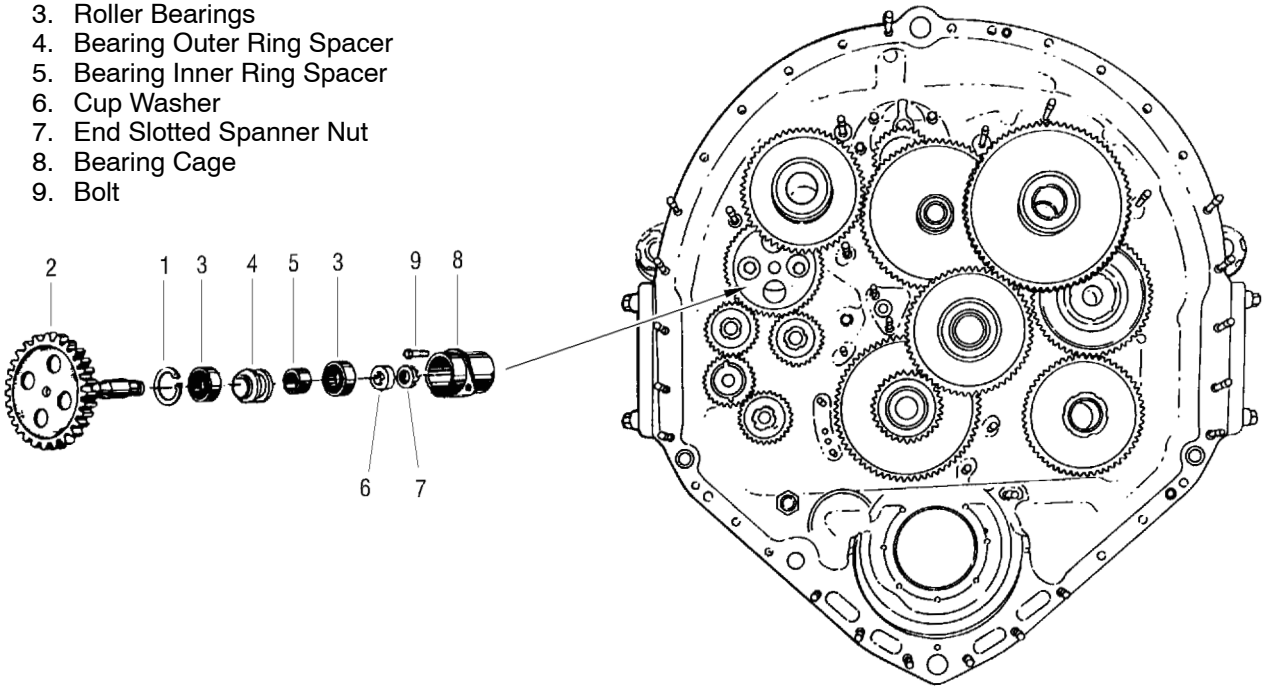

Figure 7. Tachometer Drive Idler Gear Details

11. TACHOMETER DRIVE IDLER GEAR INSTALLATION. (figure 7)

Support Equipment Required

Part No./Type Designation	Nomenclature
6796206	Puller plate, tachometer drive shaft brgs.
6796250	Support, bearing removal
6798239	Fixture, holding, tachometer drive idler gear spanner nut
6799535	Wrench, end slot spanner nut
6799537	Fixture, dimpling, cup washer
---	Wrench, torque (0–500 lb in.)
---	Gloves, insulated

Materials Required

Specification No./Part No.	Nomenclature
BB–C–104 or equivalent	Dry Ice
MS20995C32	Lockwire
*6829061	Washer, cup (1)

*Required when serviceable used washer is not available.

a. Install internal retaining ring (1, figure 7) sharp edge outward over shaft of idler gear (2). (QA)

b. Install front bearing (3) using 6796250 support and 6796206 puller plate (figure 4). (QA)

Dry Ice, BB–C–104 **59**

WARNING

Dry ice and super–chilled or heated parts will cause skin damage (burns or freezer burns). Use clean insulated gloves to handle ice and parts.

c. Install spacers (4 and 5) and rear bearing (3) on the gear shaft at room temperature using 6796250 support and 6796206 puller plate. Seat firmly. If excessive interference is experienced, either chill the drive shaft or heat the bearings per WP 016 00. (QA)

CAUTION

Do not dimple a re–used cup washer in same area as old dimple. Do not use a split or torn cup washer or one that no longer has a remaining unused lip area for dimpling.

d. Install cup washer (6) and end slotted spanner nut (7). (QA)

e. Install assembly in 6798239 holding fixture and with 6799535 end slot spanner nut wrench, (figure 8) tighten nut (7, figure 7).

f. Torque nut to 420 lb in., loosen and torque to 240–420 lb in. (QA)

g. Secure end slot spanner nut (9) by dimpling cup portion of washer into one of the scallops on OD of nut. Use 6799537 cup washer dimpling fixture (figure 9). (QA)

h. Install gear and bearing assembly in the bearing cage (8) and insert the snap ring (1). (QA)

i. Install gear and cage assembly in rear housing using two bolts (9). Torque bolts to 70–85 lb in. and lockwire. (QA)

12. GENERATOR DRIVE SHAFT AND HYDRAULIC PUMP DRIVE GEAR INSTALLATION. (figure 10)

Support Equipment Required

Part No./Type Designation	Nomenclature
6796526	Support plate
6796527	Drift–generator drive shaft assy rear brg outer race
---	Wrench, torque (0–150 lb in.)
---	Gloves, insulated

Materials Required

Specification No./Part No.	Nomenclature
MS20995C32	Lockwire
*6844819	Washer, cup (1)

*Required when serviceable used washer is not available.

WARNING

Heated parts will cause skin damage (burns). Use clean insulated gloves to handle parts.

a. Heat front bearing inner ring and rollers per WP 016 00 and install on generator shaft (3, figure 10) with numbered side facing forward. (QA)

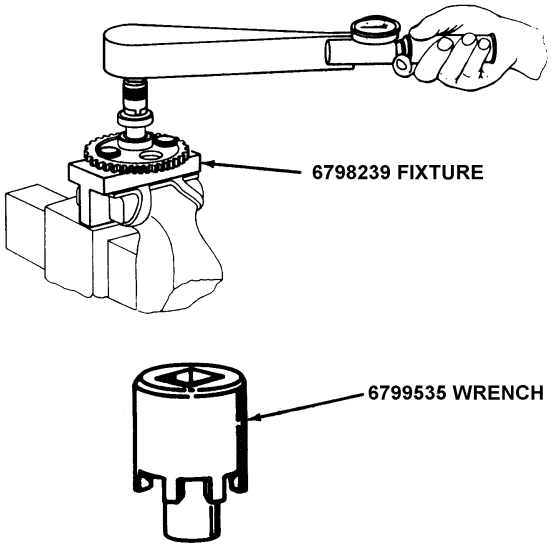

Figure 8. Installing the Tachometer Drive Idler Gear Spanner Nut

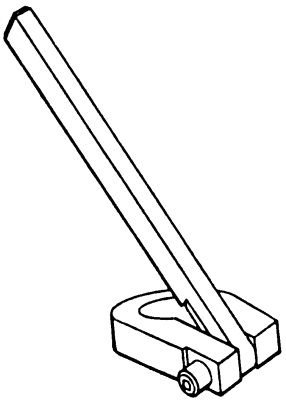

Figure 9. 6799537 Cup Washer Dimpling Fixture

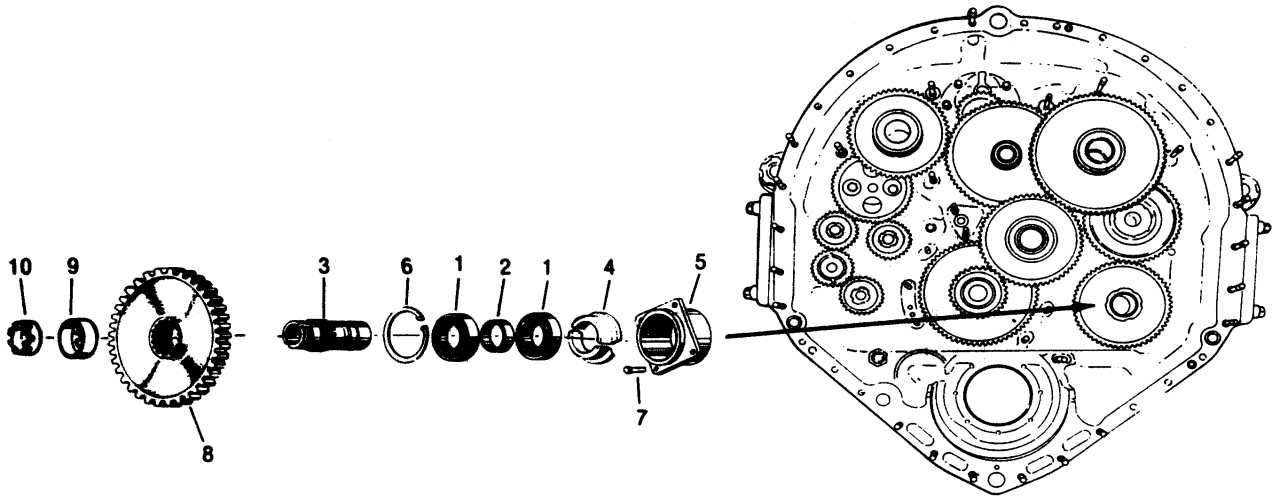

1. Roller Bearing
2. Generator Drive Shaft Spacer
3. Generator Drive Shaft
4. Split External Retaining Ring
5. Bearing Cage
6. Internal Retaining Ring
7. Bolt
8. Hydraulic Pump Drive Gear
9. Cup Washer
10. End Slotted Spanner Nut

Figure 10. Generator Drive shaft and Hydraulic Pump Drive Gear Details

b. Heat rear bearing inner ring and rollers per WP 016 00 and install spacer (2) and rear bearing inner ring and rollers on shaft with numbered side facing rearward on shaft (3). (QA)

c. Install split external retaining ring (4) on shaft and slide rear bearing inner ring over split external retaining ring. (QA)

d. Install rear bearing outer ring in bearing cage (5) (numbered side facing rearward). (QA)

e. Install bearing separators and rollers on front and rear inner rings. (QA)

f. Install front bearing outer ring (numbered side facing forward on front bearing). (QA)

g. Install shaft assembly in bearing cage (5).

h. Press front and rear bearings (1) down against the retaining ring (4) to ensure seating of parts.

i. Insert snap ring (6) in cage ID. (QA)

CAUTION

Do not tap against the shaft.

NOTE

Bearing cage may require refrigeration to facilitate installation.

j. Install the shaft assembly in the rear housing aligning the bearing cage and carefully tapping assembly into place against the housing.

k. Install the four bolts (7) and torque to 70–85 lb in. Lockwire the bolts. (QA)

CAUTION

Do not dimple a re–used cup washer in same area as old dimple. Do not use a split or torn cup washer or one that no longer has a remaining unused lip area for dimpling.

l. Install drive gear (8) on shaft (3). Install cup washer (9) and end slotted spanner nut (10) fingertight. (QA)

13. HYDRAULIC PUMP DRIVE IDLER GEAR INSTALLATION. (figure 11)

Support Equipment Required

Part No./Type Designation	Nomenclature
6796599	Wrench, spanner, generator idler bearing spindle nut
---	Gloves, insulated
---	Wrench, torque (0–750 lb in.)

Materials Required

Specification No./Part No.	Nomenclature
MS20995C32	Lockwire
6784937	Washer, key (1)

a. Install bearing outer ring and rollers (1, figure 11) in gear (2). Insert retaining ring (4) (chamfered edge forward). (QA)

WARNING

Heated parts will cause skin damage (burns). Use clean insulated gloves to handle parts.

b. Heat (WP 016 00) the bearing inner ring (1) and install on bearing flange (3) with open end toward the front. (Be sure that ring has seated.) (QA)

c. Install bearing flange (3) in rear housing using four bolts (7). Torque bolts to 70–85 lb. in. and secure bolts with lockwire. (QA)

d. Install gear assembly on bearing flange (3).

e. Install the key washer (5) and spanner nut (6).

f. Torque to 300–540 lb. in. using 6796599 spindle nut spanner wrench. Bend tab to secure nut. (See figure 12.) (QA)

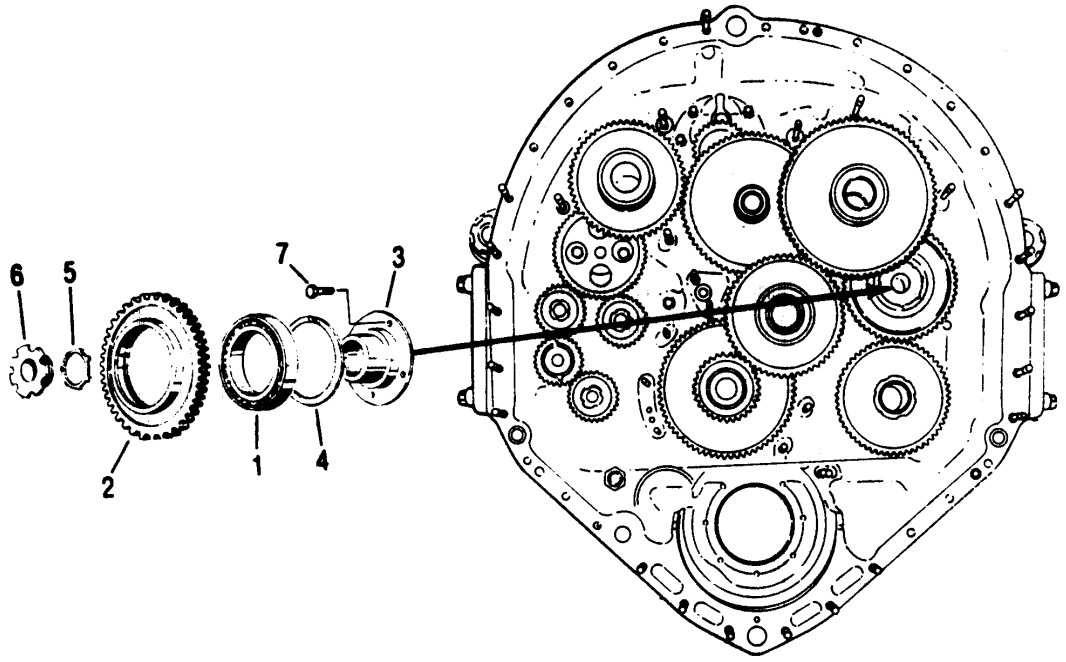

1. Roller Bearing
2. Hydraulic Pump Drive Idler Alternator Gear
3. Generator Idler Bearing Flange
4. Internal Retainer Ring
5. Key Washer
6. Spanner Nut
7. Bolts

Figure 11. Hydraulic Pump Drive Idler Alternator Gear Details

14. HYDRAULIC PUMP IDLER GEAR INSTALLATION. (figure 13)

Support Equipment Required

Part No./Type Designation	Nomenclature
---	Gloves, insulated

WARNING

Heated parts will cause skin damage (burns). Use clean insulated gloves to handle parts.

a. Heat (WP 016 00) rear bearing inner ring (1, figure 13) and install on idler gear (2) hub, numbered side facing rearward. (QA)

b. Install rear bearing outer ring (1) in rear housing. (QA)

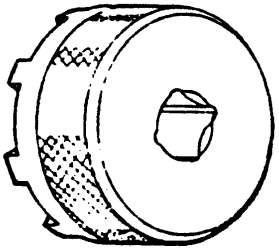

Figure 12. 6796599 Generator Idler Shaft Bearing Spindle Nut Spanner Wrench

WARNING

Heated parts will cause skin damage (burns). Use clean insulated gloves to handle parts.

c. Heat (WP 016 00) front bearing inner ring (1) and install inner ring on idler gear, numbered side facing forward. (QA)

d. Install the rollers and outer ring. (QA)

e. Install rear bearing rollers and insert assembly in rear housing with numbered side facing rearward. (QA)

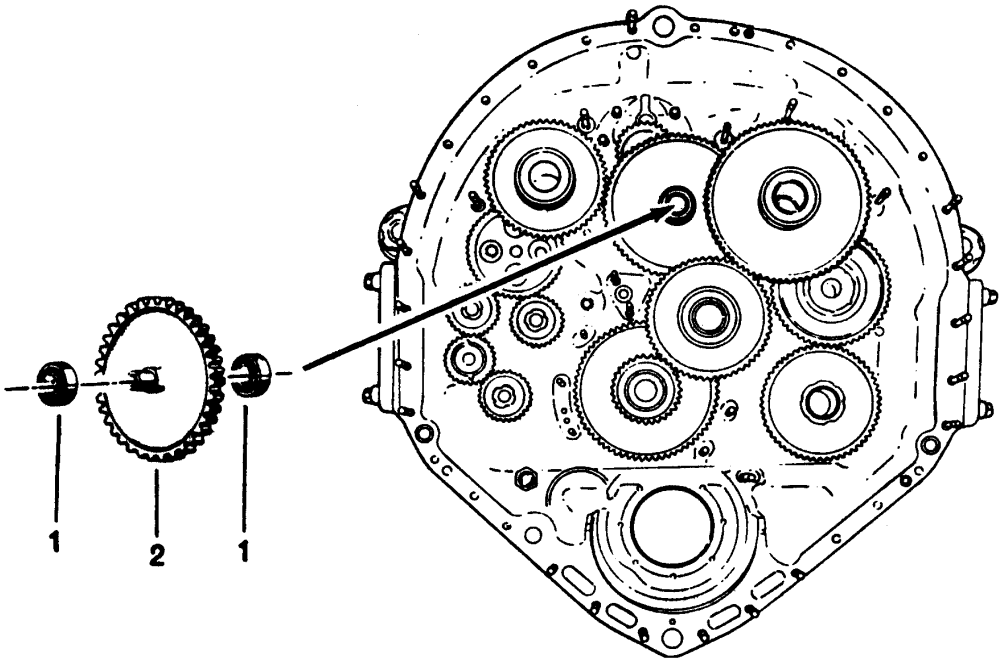

1. Roller Bearings
2. Hydraulic Pump Idler Gear

Figure 13. Hydraulic Pump Idler Gear Details

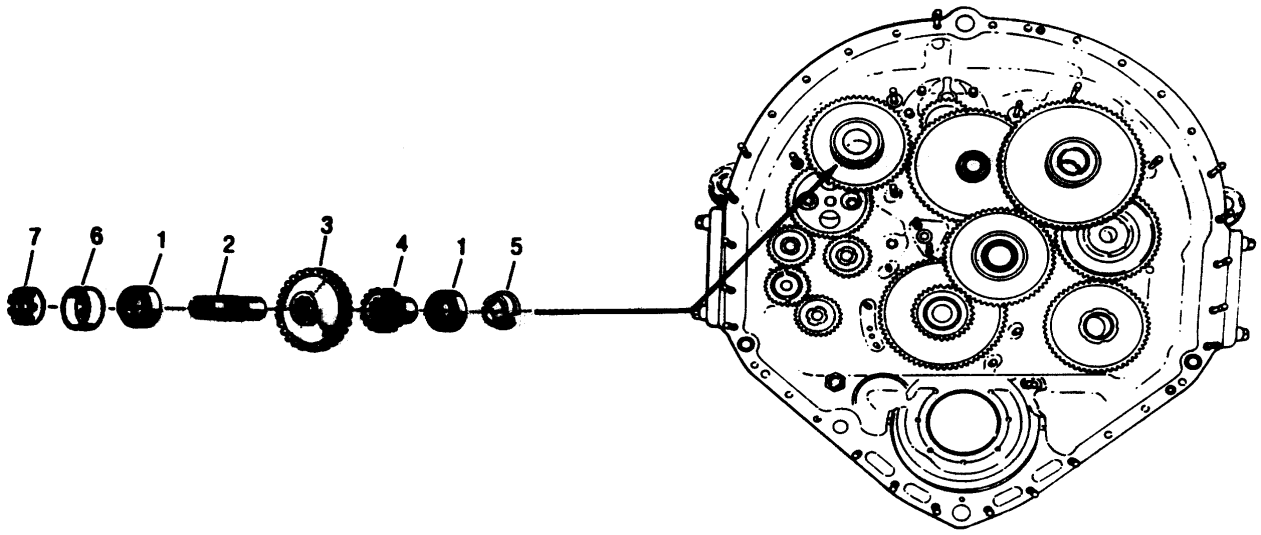

1. Roller Bearing
2. Hydraulic Pump Drive Shaft Assy
3. Hydraulic Pump Drive Gear
4. Tachometer Drive Take-Off Gear
5. Split External Retaining Ring
6. Cup Washer
7. End Slotted Spanner Nut

Figure 14. Hydraulic Pump Drive Shaft and Gear Details

15. HYDRAULIC PUMP DRIVE GEAR ASSEMBLY INSTALLATION. (figure 14)

Materials Required

Specification No./Part No.	Nomenclature
*6844819	Washer, cup (1)

*Required when serviceable used washer is not available.

a. Install rear bearing inner ring on shaft (2, figure 14) with numbered side facing rearward.

b. Install split ring (5) onto shaft and press bearing inner ring over split ring.

c. Install rear bearing outer ring in rear housing with number facing rearward.

d. Install tachometer drive gear (4) with long hub rearward.

e. Install drive gear (3).

f. Install front bearing inner ring on shaft with number facing forward, press inner ring to ensure seating of parts.

g. Install front bearing separator, rollers and outer ring on installed front inner ring with number facing forward.

h. Install rear bearing separator and rollers on installed rear inner ring.

i. Install gear and shaft assembly in rear housing. (QA)

CAUTION

Do not dimple a re-used cup washer in same area as old dimple. Do not use a split or torn cup washer or one that no longer has a remaining unused lip area for dimpling.

j. Install the cup washer (6) and end slotted spanner nut (7) fingertight. (QA)

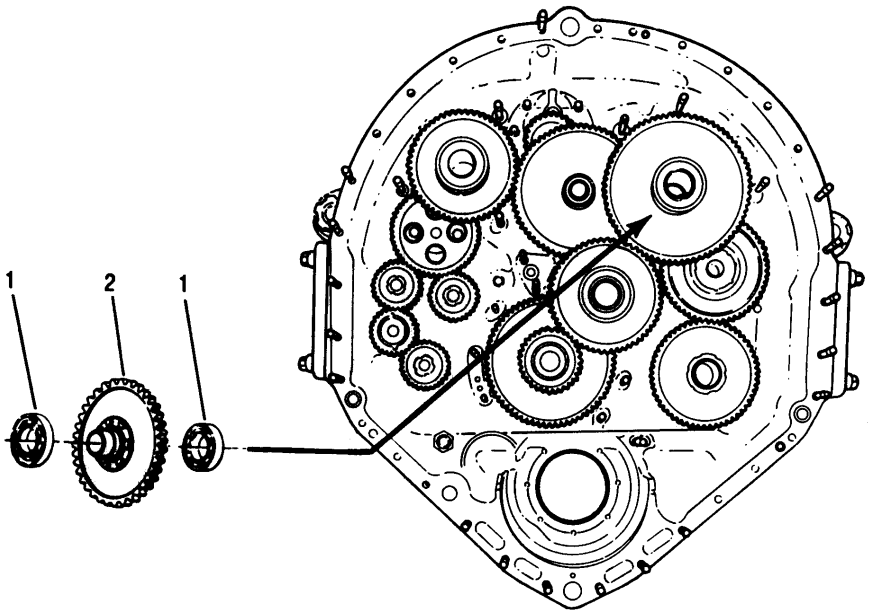

1. Roller Bearings
2. Alternator Drive Gear Assembly

Figure 15. Alternator Drive Shaft and Gear Details

16. ALTERNATOR DRIVE GEAR ASSEMBLY INSTALLATION. (figure 15)

a. Install rear bearing inner ring on alternator drive gear assembly (2, figure 15) with numbered facing rearward.

b. Install rear bearing separator and rollers and on inner ring.

c. Install rear bearing outer ring in rear housing with numbered side facing rearward. (QA)

d. Install front bearing inner ring (1) on alternator drive gear assembly (2) with numbered side facing forward.

e. Install front bearing separator, rollers, and outer ring on inner ring with numbered side facing forward.

f. Install alternator drive gear assembly into rear housing. (QA)

17. PROPELLER BRAKE, MAIN IDLER GEAR, AND INNER DIAPHRAGM INSTALLATION. (figure 16)

Support Equipment Required

Part No./Type Designation	Nomenclature
23032404	Spline, starter shaft turning
3738	Holder, starter shaft
6796019	Wrench, nut, accessory drive shaft bearing
6796074	Wrench, oil pump drive journal and tachometer drive idler spanner nut

Support Equipment Required (cont)

Part No./Type Designation	Nomenclature
6796089	Attachment, prop brake release
6796182	Spline, starter shaft turning
6799535	Wrench, end slotted spanner nut
6799537	Fixture, dimpling, cup washer
6795893	Fixture, dimpling, cup washer
6795894	Wrench, end slotted spanner nut
–––	Wrench, torque (0–500 lb in.)
–––	Wrench, torque (500–1500 lb in.)
–––	Gloves, insulated

Materials Required

Specification No./Part No.	Nomenclature
AS3085–008	Packing (1)
AS3085–114	Packing (1)
MS20995C32	Lockwire
MS24665–151	Pin, cotter (13)
Permatex 1372 or Loctite 30588	Sealant
6877242–001	Packing (1)
6898211	Washer, seal (1)
BB–C–104 or equivalent	Ice, dry

NOTE

Reduction Gear Assemblies are identified with matched set serial numbers, (Set S/N) on the front housing, rear housing, main diaphragm and inner diaphragm.

a. Install the preformed packing (2, figure 16) in the rear housing. (QA)

b. Install bearing flange (3) into rear housing as follows:

Dry Ice, BB–C–104 **59**

WARNING

Handle dry ice and super–chilled parts with insulated gloves to prevent freezer burns to skin.

(1) Freeze flange with dry ice to facilitate installation and prevent scoring the housing.

(2) Install flange into rear housing, making sure it is completely seated and bolt holes are aligned. (QA)

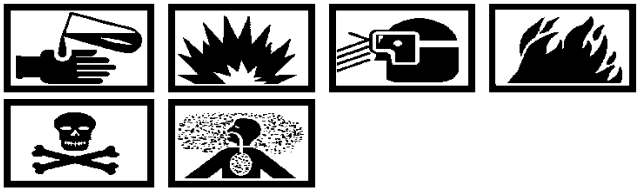

Sealing Compound Permatex No. 1372 or Loctite 30558 **34**

(3) Coat threads of bolts (11) with Permatex 1372 or Loctite 30588.

(4) Install bolts and allow part temperature to stabilize.

(5) Torque bolts 70–85 lb. in. and lockwire. (QA)

CAUTION

The propeller brake inner cone, bearing flange, outer member and release spring are a serialized matched set. Do not intermix components between sets.

The inner cone and bearing flange front faces are matched marked with the letter “O” after acceptable bench test at manufacture. The O–marks shall be indexed when installed.

c. Install inner cone (4) on bearing flange (3) with O–mark on cone front face aligned with O–mark on flange front face.

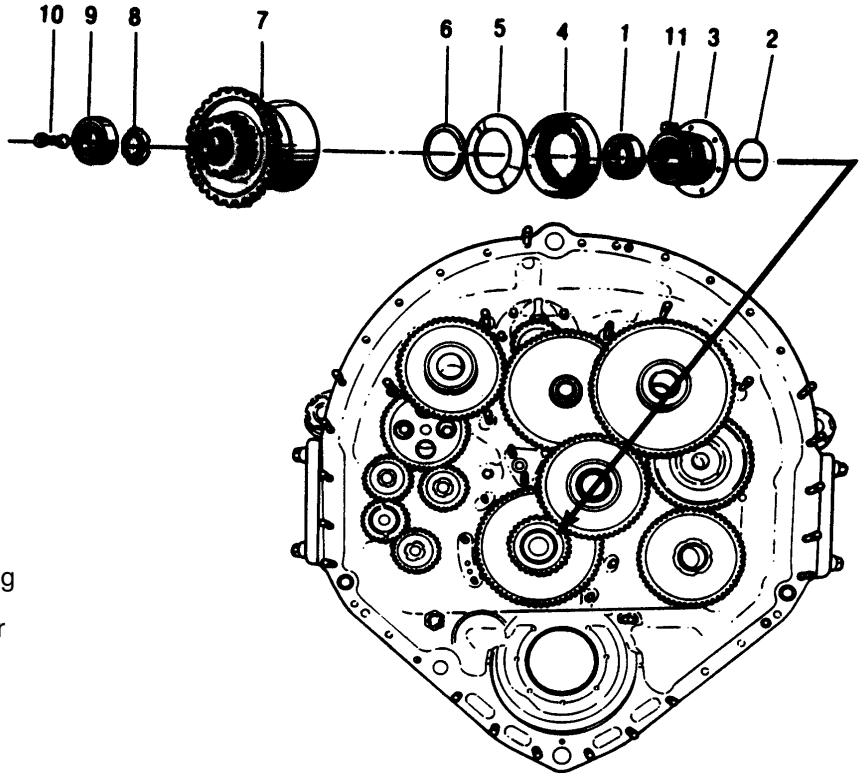

1. Roller Bearing
2. Preformed Packing
3. Starter Shaft Bearing Flange
4. Propeller Brake Inner Cone
5. Propeller Brake Release Spring
6. External Retaining Ring
7. Propeller Brake Outer Member and Starter Shaft Assembly
8. External Retaining Split Ring
9. Roller Bearing
10. Propeller Brake Oil Tube
11. Bolts

Figure 16. Propeller Brake and Starter Assembly Details

d. Install propeller brake release spring (5) on bearing flange (3) against inner cone (4) with side marked Front (convex side) out.

e. Install external retaining ring (6) on bearing flange (3).

f. Install external split ring (8) on starter shaft of assembly (7). Install front bearing (9) with numbered side facing forward and the rear face seated against the split ring.

g. Install rear bearing (1) on starter shaft of assembly (7) with numbered side facing rearward and bearing seated against shaft shoulder. (QA)

h. Install propeller brake outer member and starter shaft assembly (7) on inner cone. (QA)

i. Install propeller brake oil tube (10).

j. Install main idler gear and bearings (figure 17) in rear housing. (QA)

k. Install preformed packing (1, figure 18) on tachometer oil tube (2). Install tube into port of (inner) diaphragm (10) and secure with ring (3).

l. Install 3738 starter shaft holder (figure 19) in starter shaft spline and secure with work nuts.

NOTE

The following steps m. through q. are torque procedures for the accessory drive spanner nuts previously tightened fingertight.

m. Torque generator shaft spanner nut (10, figure 10) as follows:

(1) Torque nut (10) 1200 lb. in. using 6795894 wrench. Loosen and retorque 900–1200 lb. in. Dimple cup washer into a scallop cutout of nut using 6795893 dimpling fixture. (QA)

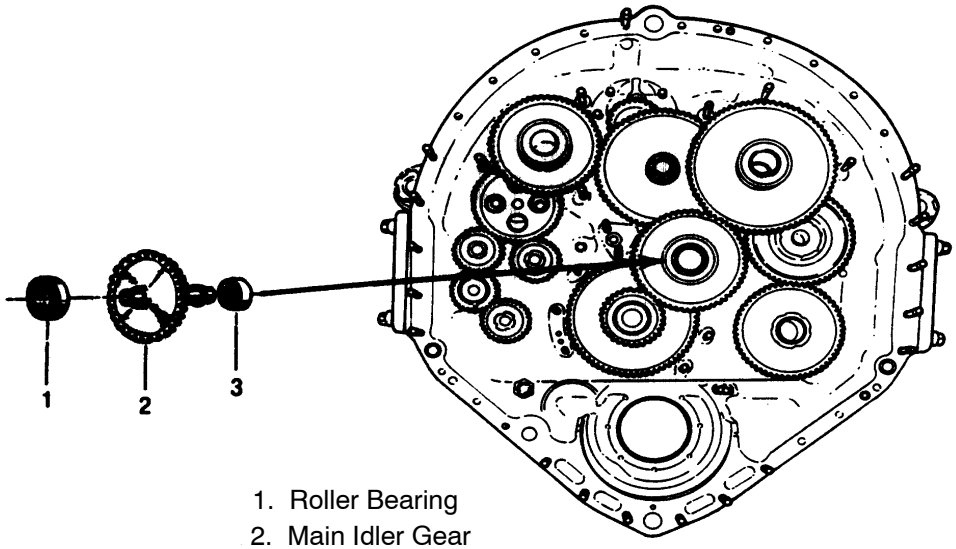

1. Roller Bearing
2. Main Idler Gear
3. Roller Bearing

Figure 17. Main Idler Gear Details

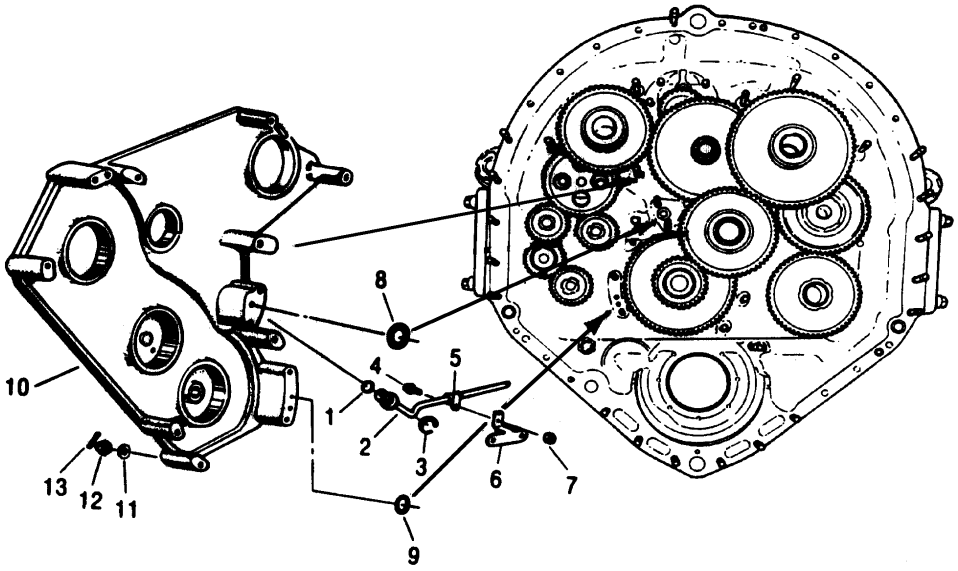

1. Preformed Packing
2. Tachometer Bearing Oil Tube
3. Internal Retaining Ring
4. Bolt
5. Clamp
6. Bracket (previously installed)
7. Nut
8. Washer Seal
9. Preformed Packing
10. Rear Housing (Inner) Diaphragm
11. Washer
12. Nut
13. Cotter Pin

Figure 18. Rear Housing (Inner) Diaphragm Details

n. Torque hydraulic pump shaft spanner nut (7, figure 14) as follows:

(1) Torque nut (7) 1200 lb. in. using 6795894 wrench. Loosen and retorque 900–1200 lb. in. Dimple cup washer into a scallop cutout of nut using 6795893 dimpling fixture. (QA)

o. Torque oil pump idler journal spanner nut (7, figure 3) as follows:

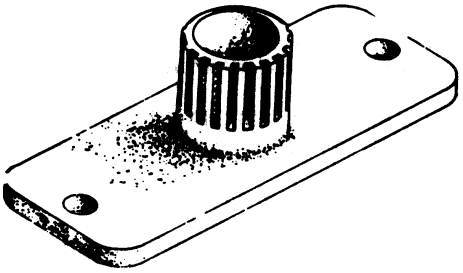

Figure 19. 3738 Starter Shaft Holder

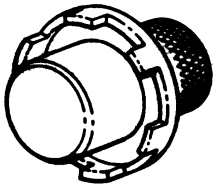

Figure 20. 6796019 Accessory Drive Shaft Bearing Nut Wrench

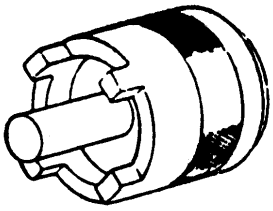

Figure 21. 6796074 Oil Pump Drive Journal and Tachometer Drive Idler Spanner Nut Wrench

(1) Torque nut (7) 420 lb. in. using 6799535 wrench. Loosen and retorque 240–420 lb. in. Dimple cup washer into a scallop cutout of nut using 6799537 dimpling fixture. (QA)

p. Torque oil pump drive shaft spanner nuts (8, figure 5) as follows:

(1) Torque nut (8) 420 lb. in. using 6799535 wrench. Loosen and retorque 240–420 lb. in. Dimple cup washer into a scallop cutout of nut using 6799537 dimpling fixture. (QA)

q. Torque tachometer drive shaft spanner nut (12, figure 6) as follows:

(1) Torque nuts (12) 420 lb in. using 6799535 wrench. Loosen and retorque 240–420 lb in. Dimple cup washers into a scallop cutout of nuts using 6799537 dimpling fixture. (QA)

r. Remove 3738 starter shaft holder.

s. Install rear housing (inner) diaphragm onto rear housing as follows:

(1) Install washer seal (8, figure 18) and preformed packing (9) into recesses in rear housing. (QA)

(2) Install (inner) diaphragm over studs.

(3) Install washers (11) and nuts (12) fingertight.

NOTE

The propeller brake apply spring tends to prevent free seating of the (inner) diaphragm.

(4) Seat (inner) diaphragm by torquing nuts in sequence at locations 8, 10, and 13 (figure 22) 100 lb in. then loosen to zero torque. (QA)

(5) Torque all nuts 140–180 lb in. in numerical sequence shown (figure 22). (QA)

(6) Install cotter pins (13). Do not bend tangs until bearing bore alignment check is completed. Refer to paragraph 18, this WP.

t. Pivot (do not bend) tachometer bearings oil tube (2, figure 18) from over the journals and gears.

u. Check propeller brake release operation using shop air as follows:

(1) Install 6796089 propeller brake release attachment (figure 23) into port at lower righthand side of rear housing.

(2) Remove plug facing downward below the oil pump mounting pad.

(3) Connect shop air to release attachment and apply 60–100 psig pressure to propeller brake.

(4) Using 23032404 or 6796182 starter shaft turning spline (figure 24) attempt to turn starter shaft. If shaft does not turn, remove propeller brake. (QA)

18. BEARING BORE ALIGNMENT CHECK. Perform the alignment (squareness and concentricity) check on the starter, alternator, and hydraulic pump drives after installation of the inner diaphragm. This check will confirm proper alignment of the diaphragm bearing bores with the rear housing bearing bores. In addition, it will determine the proper installation/seating of bearing cages in their respective bores and accessory drive bearings on the shafts.

Support Equipment Required

Part No./Type Designation	Nomenclature
23034201	Fixture, checking, accessory drive pads concentricity and squareness
---	Gage, feeler (0.002 in.)

a. Check the starter, alternator, and hydraulic pump drive shafts for concentricity and squareness to their respective pads using 23034201 checking fixture (figure 25). The following maximum limits apply. (QA)

Pad	Squareness	Concentricity
Starter	0.005 in. FIR	0.007 in. FIR
Alternator	0.009 in. FIR	0.007 in. FIR
Hydraulic Pump	0.005 in. FIR	0.007 in. FIR

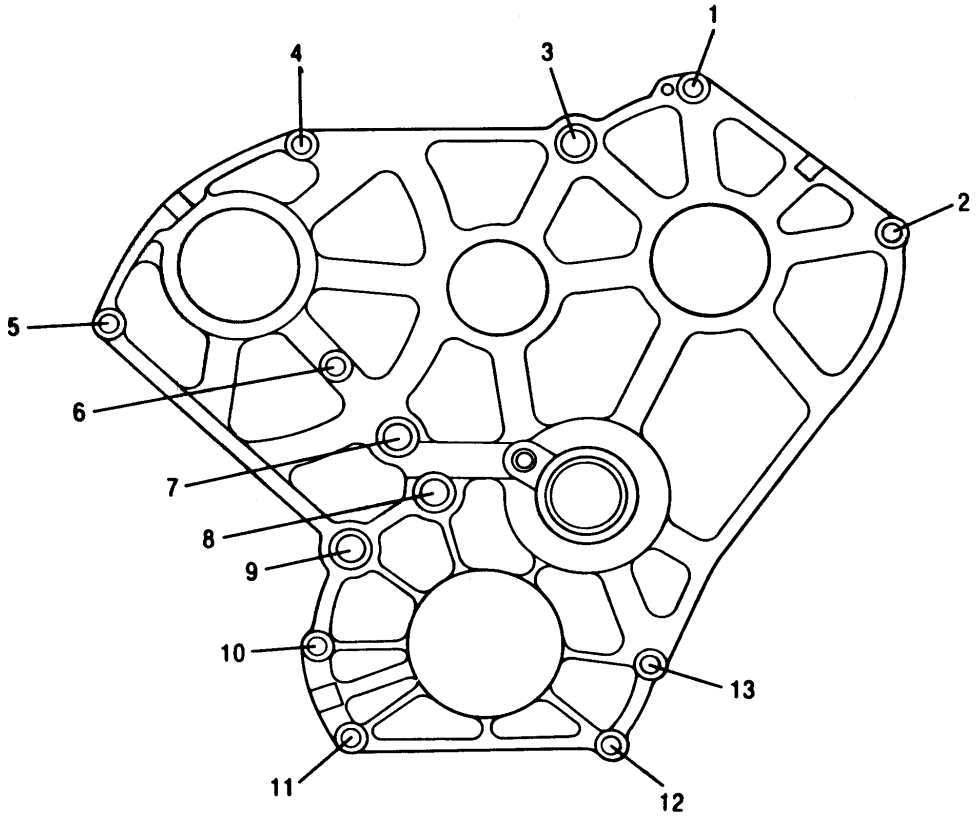

Figure 22. Inner Diaphragm Nut Tightening Sequence

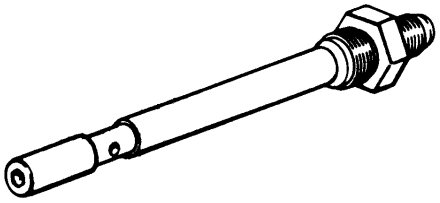

Figure 23. 6796089 Prop Brake Release Attachment

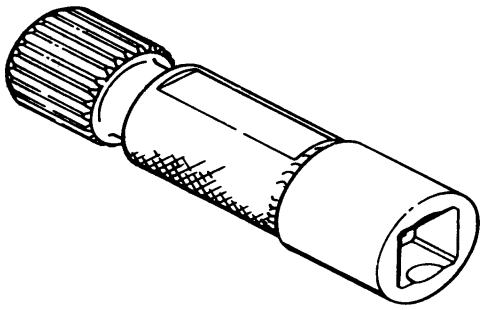

Figure 24. 23032404 or 6796182 Starter Shaft Turning Spline

b. If above limits are exceeded, check the following:

(1) Proper seating of bearing inner rings on drive shafts.

(2) Proper seating of bearing outer rings in diaphragm and rear housing bearing cages.

(3) Check for loose or improperly seated bearing cages in diaphragm and rear housing as follows:

(a) Apply hand pressure to cage, any movement is cause for rejection of reduction gear assembly.

NOTE

The cages may be tight but not properly seated.

(b) Using a 0.002 in. feeler gage, check cages full circumference for proper seating to surface.

(c) After completion of acceptable alignment check, bend cotter pin tangs (figure 26).

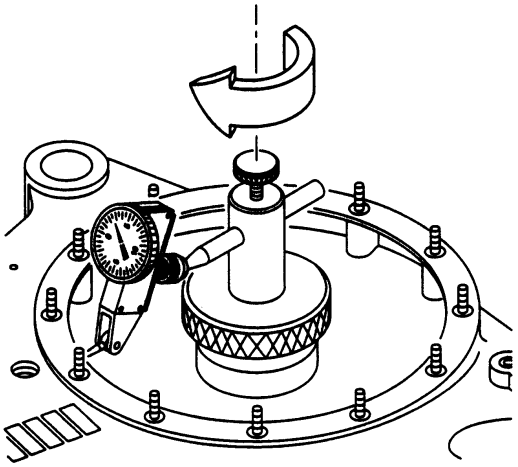

Figure 25. 23034201 Accessory Drive Pads Concentricity and Squareness Checking Fixture

19. **REDUCTION GEAR FRONT HOUSING ASSEMBLY.**

NOTE

Reduction Gear Assemblies are identified with matched set serial numbers, (Set S/N) on the front housing, rear housing, main diaphragm and inner diaphragm.

20. MAIN AND NOSE SCAVENGE OIL PUMP ASSEMBLIES INSTALLATION (figure 27).

Support Equipment Required

Part No./Type Designation	Nomenclature
–––	Wrench, torque (0–150 lb in.)

Materials Required

Specification No./Part No.	Nomenclature
MS20995C32	Lockwire
MS24665–151	Pin, cotter (7)
6850984	Washer, cup (1)

a. Install drive gear (14, figure 27) in bore of pump (15), install bolt (13) and nut (12). Torque nut 45–55 lb in. and secure with cotter pin (11). (QA)

b. Install shaftgear (23) in bore of pump (19), install cup washer (22) and end slotted spanner nut (21). Torque nut 70–85 lb in and dimple cup washer into a scallop cut of nut. (QA)

c. Install packing (20) into groove on mounting face of assembled pump (19). Install assembly over studs on pad in front housing and secure with washers (18) and nuts (17). Torque nuts 70–85 lb in. and secure with cotter pins (16). (QA)

d. Install assembled pump (15) on nose bearing plate (5). Secure with washers (10) and bolts (9). Torque bolts 70–85 lb in. and lockwire. (QA)

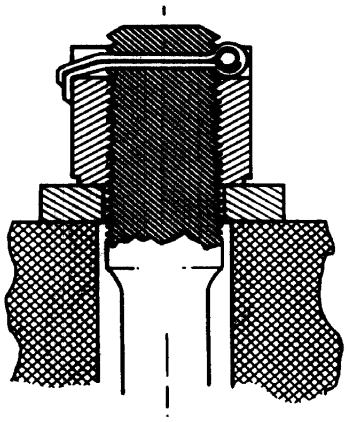

Figure 26. Inner Rear Housing Diaphragm Cotter Pin Installation

21. REAR CARRIER BEARING INNER RING INSTALLATION (figure 27).

Support Equipment Required

Part No./Type Designation	Nomenclature
---	Gloves, insulated

CAUTION

When installing locking key (8, figure 27), be sure it is seated snug and flat against slot shoulder. If installed upside down, there will be a gap of 3/16 inch between slot and corner of key. Also bearing inner ring (7) shall be up against carrier shoulder (figure 28).

a. Install inner locking key (8, figure 27) in key slot on rear carrier hub as shown (figure 28). (QA)

WARNING

Heated parts will cause skin damage (burns). Use clean insulated gloves to handle parts.

b. Heat (WP 016 00) rear carrier bearing inner ring (7, figure 27).

NOTE

Be sure key slot on inner ring engages locking key and that inner ring is seated firmly against rear carrier hub.

c. Install ring on rear carrier hub with tapered edge facing rear (figure 29). (QA)

22. PROPELLER SHAFT INSTALLATION. (figure 27)

Support Equipment Required

Part No./Type Designation	Nomenclature
6796010	Lift, propeller shaft and planet gear assembly
6796014	Index plate, planet gear
6796056	Guide, propeller shaft to roller bearing
6796169	Guide pin, reduction gear thrust bearing retainer
---	Wrench, torque (0–150 lb in.)

Materials Required

Specification No./Part No.	Nomenclature
Permatex 1372 or Loctite 30588	Sealant

NOTE

The 6796014 planet gear index plate was installed when the propeller shaft and planetary gear assembly was removed.

a. Install 6796010 propeller shaft and planetary gear lift on threads of rear carrier (figure 30).

b. Remove the propeller shaft and planetary gear assembly from the stand.

c. Install 6796169 thrust bearing retainer guide pins in nose bearing plate (figure 31).

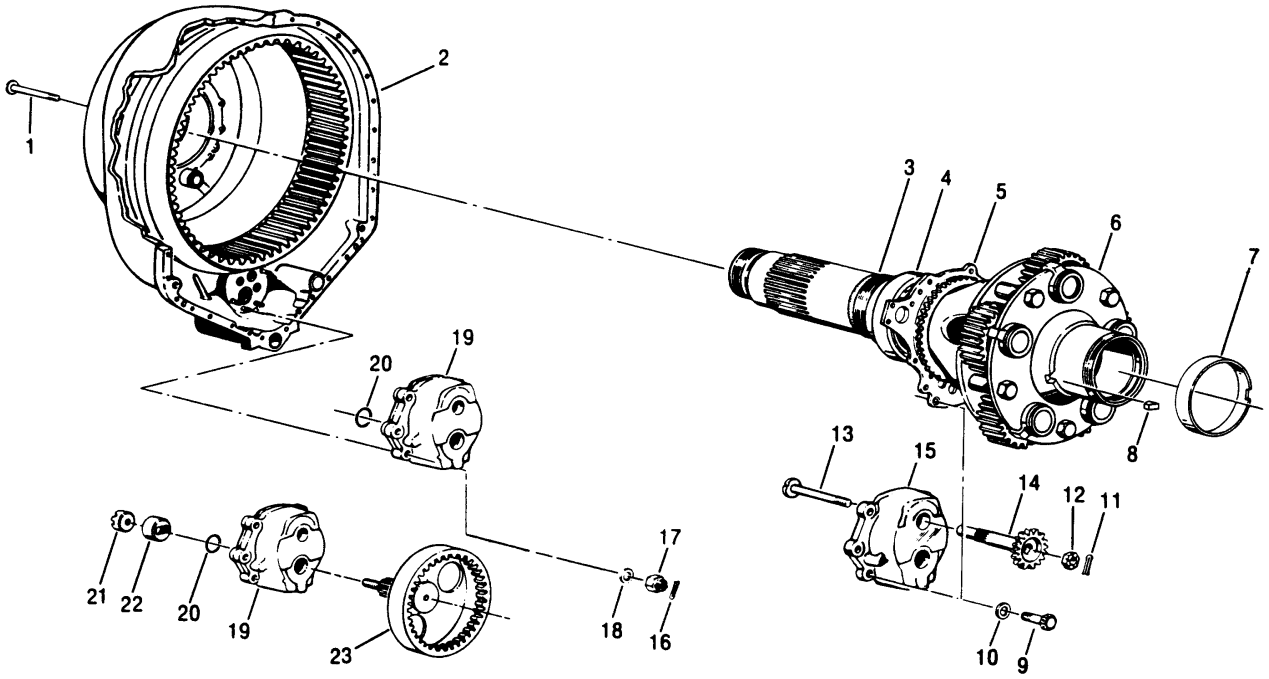

1. Screw
2. Front Housing
3. Roller Bearing Inner Ring (Ref)
4. Ball Bearing (Ref)
5. Nose Bearing Plate
6. Propeller Shaft and Planetary Gears
7. Bearing Inner Ring
8. Key
9. Bolt
10. Washer
11. Cotter Pin
12. Nut
13. Bolt
14. Drive Gear
15. Scavenge Oil Pump (Nose)
16. Cotter Pin
17. Nut
18. Washer
19. Scavenge Oil Pump (Main)
20. Preformed Packing
21. End Slotted Spanner Nut
22. Cup Washer
23. Shaftgear

Figure 27. Propeller Shaft and Planetary Gears, and Scavenge Oil Pump Details

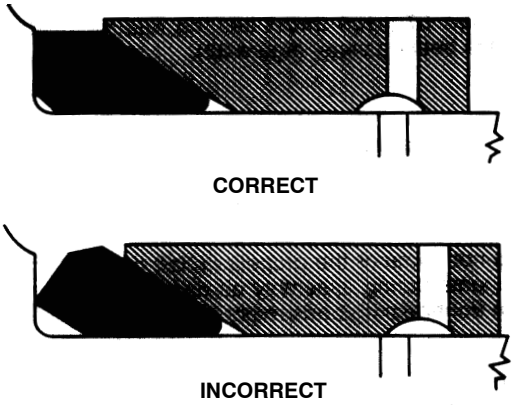

Figure 28. Installing Rear Carrier Bearing Inner Ring Locking Key

CAUTION

Do not hammer the propeller shaft components during assembly as damage to the front bearing parts might occur.

d. Install 6796056 roller bearing guide on front of propeller shaft (figure 32).

e. Remove roller bearing retainer from bearing inside front housing.

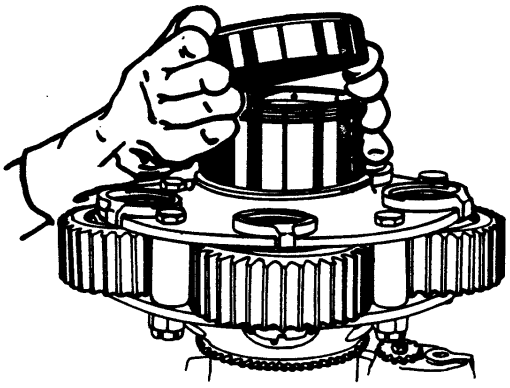

Figure 29. Installing Rear Carrier Bearing Inner Ring

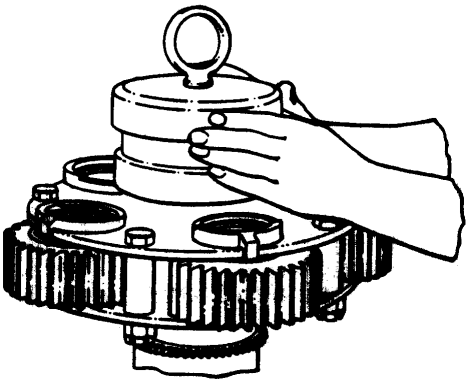

Figure 30. Installing 6796010 Propeller Shaft and Planetary Gear Lift on Rear Carrier

CAUTION

Ensure that the spring tension washers are in position (front and rear as tagged at disassembly) on the rear of the propeller shaft roller bearing. Washers should be in contact at their ID and slant outward with the gap at their OD. Bearings should be installed so that grooves for washers are facing each other.

f. If planetary gear indexing plate is not installed, index planetary gear by positioning all zeros at farthest outer locations.

g. Slowly lower propeller shaft in front housing. (figure 33).

h. Guide dowels through front housing and position nose bearing plate over front housing locating dowels.

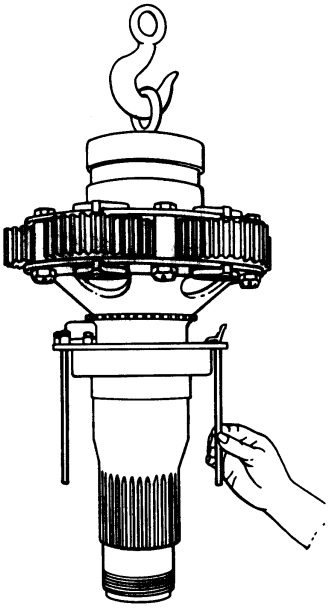

Figure 31. Installing 6796169 Thrust Bearing Retainer Guide Pins in Nose Bearing Plate

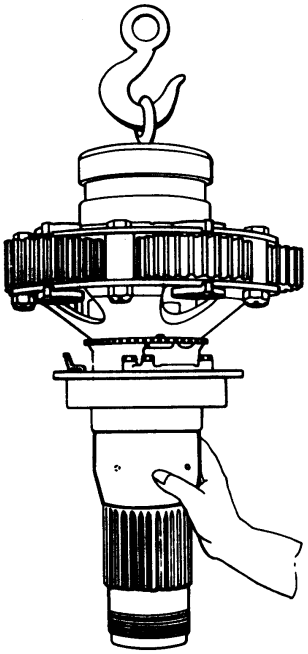

Figure 32. Installing 6796056 Roller Bearing Guide on Front of Propeller Shaft

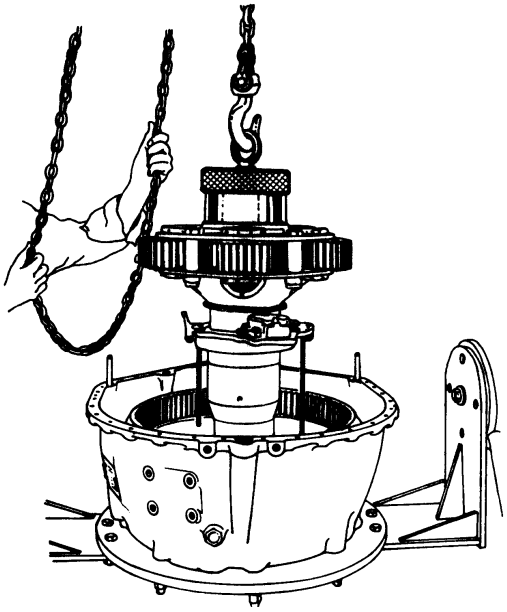

Figure 33. Installing Propeller Shaft and Planet Assembly in Front Housing

i. Properly engage teeth of scavenge pump drive gears and be sure nose bearing locking key engages key slot in thrust bearing outer ring. (QA).

CAUTION

Check proper positioning of thrust sensitive switch lever against rear bearing outer ring and be sure that nose bearing locking key is engaged with key slot in bearing outer ring.

j. Propeller shaft front bearing inner ring must enter outer ring and rollers installed in front housing. (QA).

k. Remove two thrust bearing retainer guide pins from front of front housing.

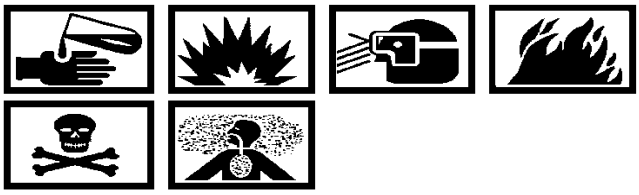

Sealing Compound Permatex No. 1372 or Loctite 30558 **34**

l. Apply Permatex 1372 or Loctite 30588 under heads and install two flat head screws (1, figure 27) from outside of front housing to secure nose bearing plate. Torque screws to 70–85 lb in. (QA)

m. Remove 6796056 propeller shaft to roller bearing guide (figure 32).

n. Remove 6796010 propeller shaft and planet gear lift (figure 30).

o. Remove 6796014 planetary gear indexing plate (figure 34).

p. Install nose bearing thrust plate, propeller shaft oil seal, and thrust nut. Refer to WP 034 00.

q. Install propeller shaft plug. Refer to WP 035 00.

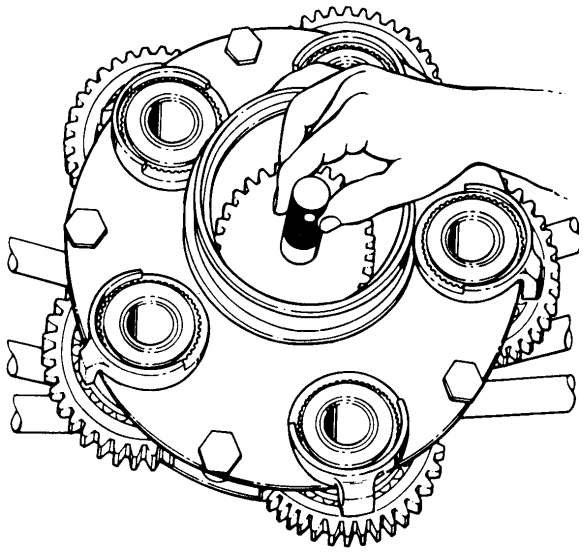

Figure 34. Removing 6796014 Planetary Gear Indexing Plate

23. MAIN DIAPHRAGM ASSEMBLY INSTALLATION. (figure 35)

Support Equipment Required

Part No./Type Designation	Nomenclature
---	Wrench, torque (0–150 lb in.)

Materials Required

Specification No./Part No.	Nomenclature
AS3085–122	Packing (3)
MS20995C32	Lockwire
PL32M	Compound, sealing (Hylomar)

WARNING

Heated parts will cause skin damage (burns). Use clean insulated gloves to handle parts.

CAUTION

Be sure bearing cage is seated before installing the bearing outer ring and rollers.

NOTE

Reduction Gear Assemblies are identified with matched set serial numbers, (Set S/N) on the front housing, rear housing, main diaphragm and inner diaphragm.

a. Install outer ring and rollers of bearing (27, figure 35) with key slot aligned with slot in bearing cage. If necessary, the diaphragm may be locally heated in bearing area to facilitate outer ring and rollers installation. Use a hot plate set at 350°F (177°C) maximum.

b. Install keyed segment plate (25) over studs with slot aligned with cage and outer ring slots. Install segment plates (26) over studs.

c. Install key assembly (24) in slot of keyed segment plate. Install all nuts (23).

d. Torque nuts 100 lb in., loosen, then 74–89 lb in. (QA)

e. Install oil jet nozzle assembly (33) and secure with washers (32) and screws (31).

f. Torque screws (31) 50–58 lb in. and lockwire. (QA)

g. Install pinion gear oil return baffle assembly (18) and secure with screws (17).

h. Torque screws (17) 50–58 lb in. and lockwire. (QA)

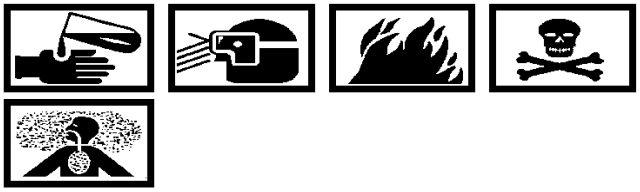

Sealing Compound PL32M (Hylomar) 41

i. Apply Hylomar PL32M sealant to front housing splitline surface. Cover surface outside bolt circle only; keep sealant out of packing grooves. Wipe sealant with a dry rag or finger leaving a very thin uniform film on surface. (QA)

j. Install preformed packings (30) into grooves on splitline surface.

k. Install main diaphragm (29) over rear carrier hub and previously installed inner bearing ring.

l. Install key (16) in slot of previously installed inner ring of rear carrier bearing (27).

WARNING

Heated parts will cause skin damage (burns). Use clean insulated gloves to handle parts.

m. Heat (WP 016 00) and install inner ring of bearing (13) in main drive gear with open side toward rear and key slot aligned with key. Seat flanged side against rear carrier bearing inner ring. (QA)

24. PINION GEAR INSTALLATION. (figure 35)

Support Equipment Required

Part No./Type Designation	Nomenclature
23034230	Compressor, pinion front bearing outer ring

Materials Required

Specification No./Part No.	Nomenclature
AS3209–224	Seal, O–ring (1)

a. Install packing (21, figure 35) on rear shaft of pinion gear.

b. Install the 23034230 pinion front bearing outer ring compressor on the bearing outer ring and rollers. (figure 36)

c. Install the assembly over the bearing inner ring on the pinion gear.

d. Remove compressor tool.

e. Install pinion gear assembly in main diaphragm. Be sure assembly meshes with scavenge pump gear, seats properly, and locking key in bearing cage engages key slot in front bearing outer ring. (QA)

25. MAIN DRIVE GEAR AND SUN GEAR INSTALLATION. (figure 35)

Support Equipment Required

Part No./Type Designation	Nomenclature
SWE 8100	Powerwench (Sweeney)
SWE 8471	Plate, anchor
6797589	Fixture, bending, sun gear hub locktab
6799875	Wrench, spanner, rear carrier bearing retaining nut
–––	Wrench, torque (0–500 lb in.)

Materials Required

Specification No./Part No.	Nomenclature
DOD–L–25681	Lubricant, Dry film
MIL–PRF–23699	Oil, lubricating
MS20995C32	Lockwire
6824636	Washers, tab (10)

CAUTION

Use care when meshing the main drive gear and pinion teeth.

NOTE

Assure main drive gear bearing outer ring key slot is aligned with unthreaded hole on main drive gear prior to main drive gear installation.

a. Fit the main drive gear (15, figure 35), with bearing outer ring and rollers installed, over the rear carrier bearing inner ring.

b. Install the rear portion of the bearing inner ring on the rear carrier against the inner ring.

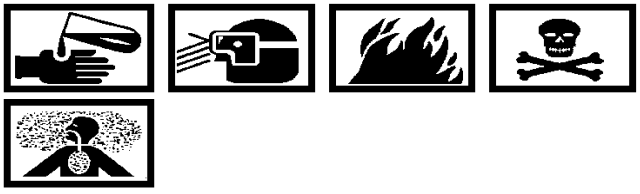

Dry Film Lubricant DOD–L–25681 **30**

c. Lubricate face and threads of spanner nut (12, figure 35) with DOD–L–25681 lubricant.

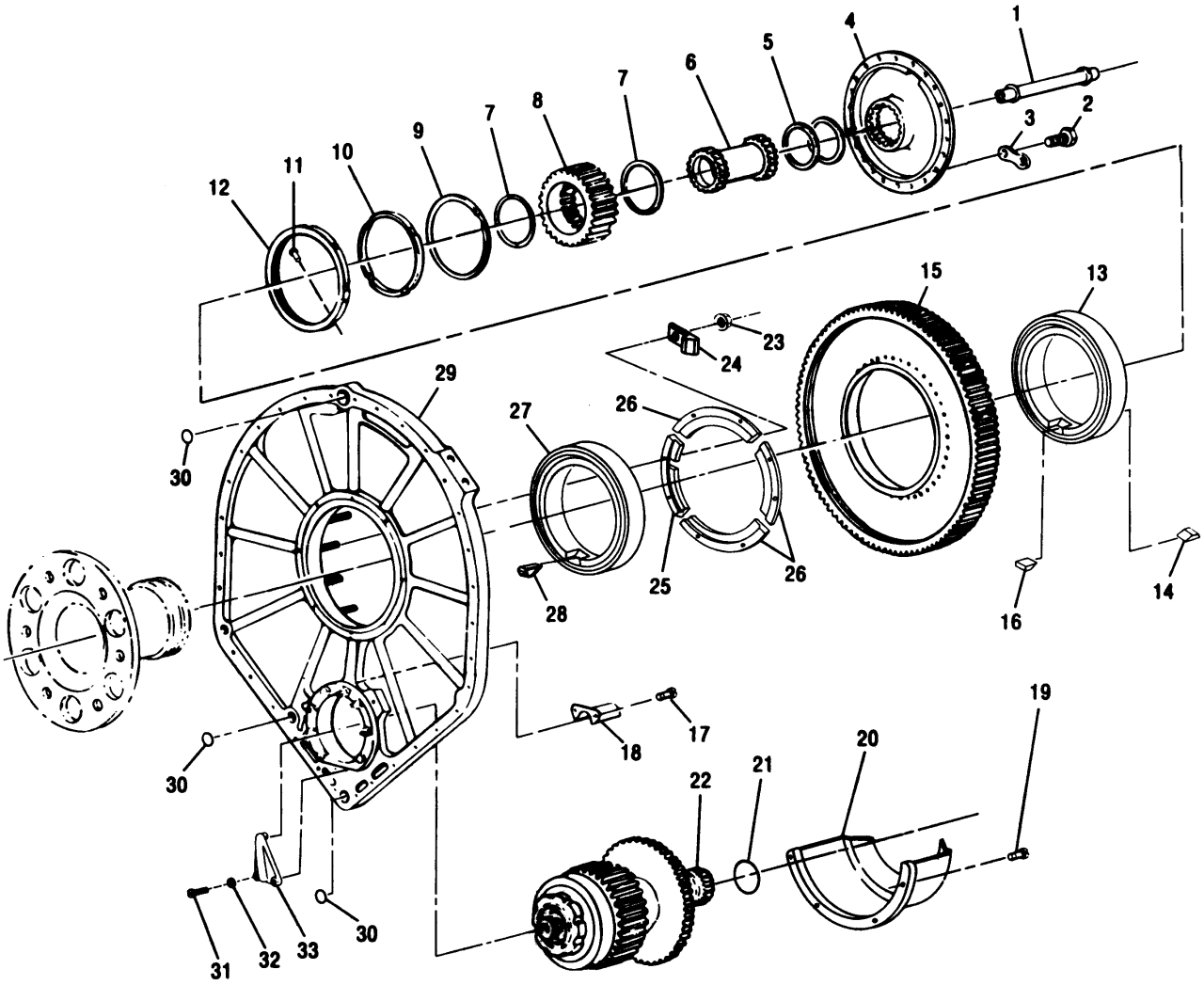

1. Carrier Oil Delivery Tube
2. Bolt
3. Lockwasher
4. Sun Gear Hub Flange
5. Internal Retaining Ring
6. Sun Gear Hub
7. Internal Retaining Rings
8. Sun Gear
9. Internal Retaining Ring
10. Lock Pin Retaining Ring
11. Lock Pin
12. Spanner Nut
13. Roller Bearing
14. Key
15. Main Drive Gear
16. Key
17. Screw
18. Oil Return Baffle
19. Screw
20. Pinion Baffle Assembly
21. Preformed Packing
22. Pinion Shaftgear Assembly
23. Nut
24. Key Assembly
25. Keyed Segment Plate
26. Segment Plates
27. Roller Bearing
28. Key
29. Main Diaphragm
30. Preformed Packings
31. Screw
32. Washer
33. Oil Jet Nozzle

Figure 35. Main Drive Gear Pinion Gear and Main Diaphragm Details

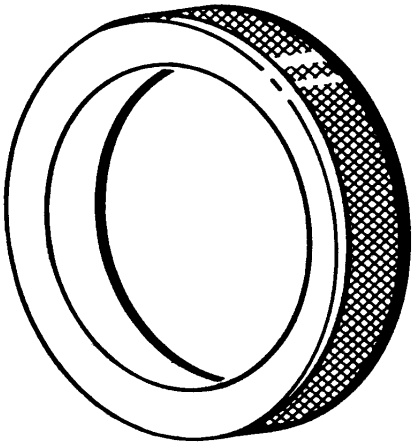

Figure 36. 23034230 Pinion Front Bearing Outer Ring Compressor

NOTE

Rear carrier bearing spanner nut (12) has left hand threads.

d. Install nut (12) on rear carrier hub.

e. Install 6799875 rear carrier bearing spanner nut wrench through main drive gear and rear carrier hub engaging splines with planet gears.

f. Seat spanner wrench lugs in spanner nut slots.

g. Install SWE 8100 Powerench over 6799875 spanner nut wrench and secure with SWE 8471 anchor plate. (See figure 37.) Slowly torque (LH) nut to 54 lb ft. input and 600 lb ft. output. Adjust torque in tightening direction to align next lock pin hole. (QA)

h. Install lock pin (11) from inside of rear carrier. (QA)

i. Install retaining ring (10). Due to interference fit of ring to pin, apply pressure to side opposite of pin slot to seat ring in carrier bore. Firmly seat ring in bore. (QA).

j. Install internal retaining ring (9) in ID of carrier hub. (QA)

k. Place two internal retaining rings (7) loose on sun gear hub (6).

l. Install front internal retaining ring (7) in sun gear (8) and rear internal retaining ring (5) in sun gear hub flange (4). (QA)

m. Place hub (6) in sun gear (8) and flange (4). Ensure sun gear (8) inner spline faces toward hub.

n. Secure with two internal retaining rings. (QA)

o. Install main drive gear bearing locking key (14) in key slot on bearing outer ring. (QA)

p. Carefully insert sun gear in center of planet gears. (Be sure locking key (14) engages slot in sun gear hub flange.) (figure 38).

q. Align bolt holes and install tab washers (3) and bolts (2). (QA)

r. Tighten bolts (2) evenly in sequence, 180° apart, to seat flange against main drive gear. Torque bolts to 385–425 lb in., loosen to zero, then retorque to 385–425 lb in. (QA)

CAUTION

Bending the tabs with a hammer can damage bearing and gears. Tabs shall be bent using bending fixture.

s. Using 6797589 tab washer bending fixture, bend tab washers against inboard bolt head flat (figures 39 and 40). (QA)

t. Install carrier oil delivery tube (1) as follows:

Lubricating Oil, MIL–PRF–23699 2

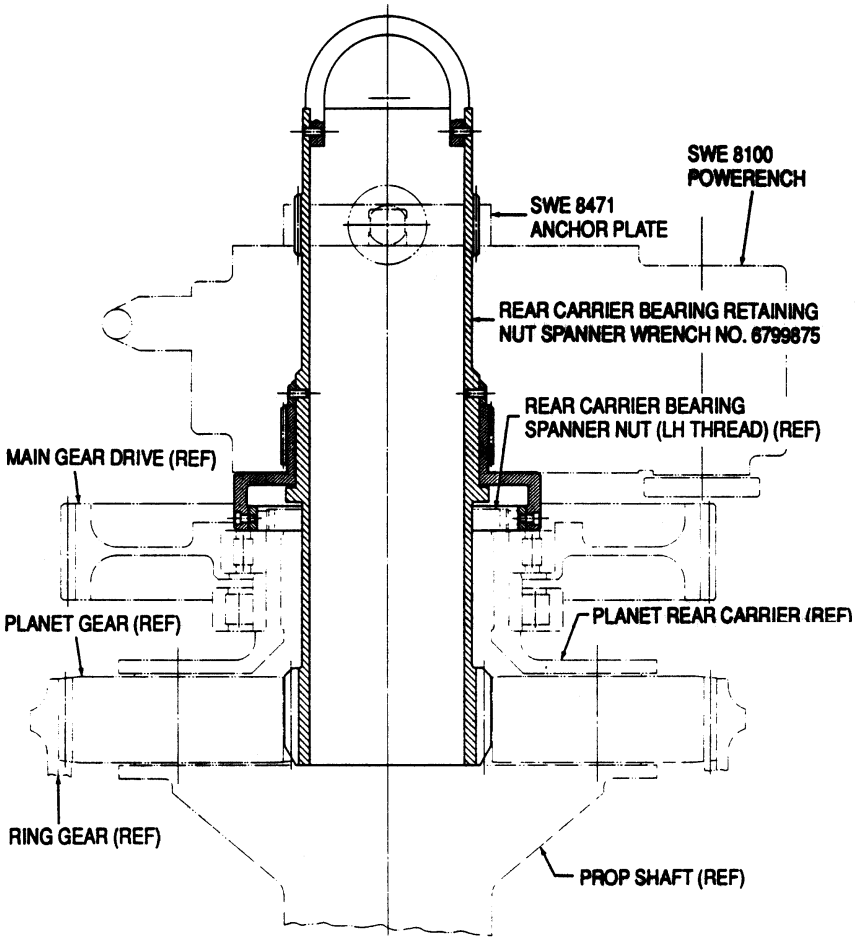

Figure 37. Tightening Rear Carrier Bearing Spanner Nut

(1) Lubricate ends of delivery tube with engine oil.

(2) Install tube through sun gear into oil delivery flange.

(3) Tube shall turn freely by hand after installation.

u. Install pinion baffle assembly (20, figure 35) and screws (19). Torque screws 50–58 lb in. and lockwire. (QA)

26. **REAR HOUSING INSTALLATION.**

Support Equipment Required

Part No./Type Designation	Nomenclature
6796182	Spline, starter shaft turning
6799782	Adapter, lifting, reduction gear rear housing assembly.
---	Dial indicator and weighted base
---	Wrench, torque (0–300 lb in.)

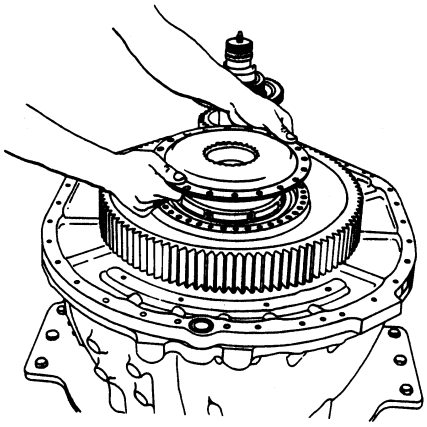

Figure 38. Installing Sun Gear and Hub in Main Drive Gear

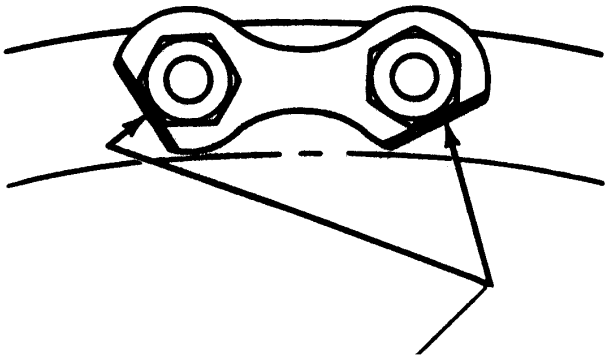

Crimp Against One Inboard Flat of Bolt Head

Figure 39. Tab Washer Installation

Materials Required

Specification No./Part No.	Nomenclature
MIL–PRF–23827	Grease, lubricating
DOD–L–25681	Lubricant, Dry film
PL32M	Compound, sealing (Hylomar)
AS3085–122	Packing (2)
AS3085–129	Packing (1)
Permatex 1372 or Loctite 30588	Compound, sealing

NOTE

Reduction Gear Assemblies are identified with matched set serial numbers, (Set S/N) on the front housing, rear housing, main diaphragm and inner diaphragm.

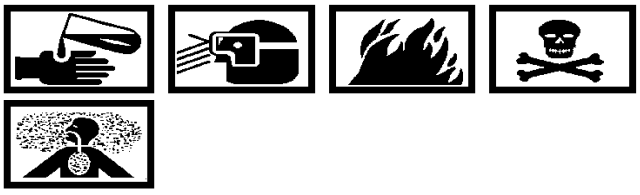

Sealing Compound PL32M (Hylomar) 41

a. Apply Hylomar PL32M sealant to the diaphragm–to–rear housing splitline surface. Cover 100 percent of the splitline surface with the sealant. (QA)

b. Install three preformed packings in the diaphragm–to–rear housing splitline surface.

c. Position the rear housing assembly front end down in the stand.

d. Attach the 6799782 rear housing lifting adapter on the starter pad (figure 41).

e. Lift rear housing from stand and carefully lower it onto the front housing and main diaphragm.

f. As the rear housing is lowered, check for proper entry of pinion rear bearing into the rear housing bearing cage. (Be sure locking key in bearing cage engages key slot in rear bearing outer ring). (QA)

g. Remove hoist and lifting adapter.

h. Use the 6796182 starter shaft turning tool to ensure that the accessories drive gear engages with propeller brake outer member. (QA)

i. Install the splitline bolts, studs, washers and nuts to requirements of figure 42.

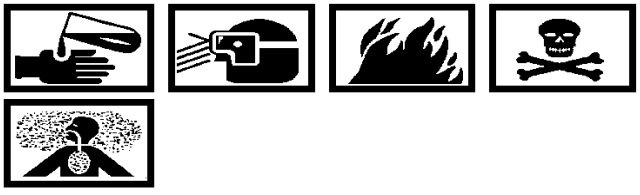

Dry Film Lubricant DOD–L–25681 30

j. Coat threads with DOD–L–25681 lubricant.

General Purpose Grease MIL–PRF–23827 18

k. Pack the cavity of bearing bolt (bolt and bearing assembly), installed at bolt hole 31 (figure 42), with grease conforming to MIL–PRF–23827.

NOTE

After tightening to torque limits, wait ten minutes and retighten to limits. Repeat this wait period–retighten cycle as often as necessary until at least 95 percent of the torque limit is maintained at the last cycle check.

l. Torque nuts at hole locations 4 and 5 (figure 42) 120–150 lb in. Torque remaining nuts 140–170 lb in. (QA)

m. Check end play of pinion gear using a standard dial indicator and weighted base. Push pinion gear downward to remove any end play. Position dial indicator plunger on rear face of pinion gear shaft and zero out. Manually lift (by hand) pinion gear and observe reading. Minimum acceptable end play is 0.020 in. (QA)

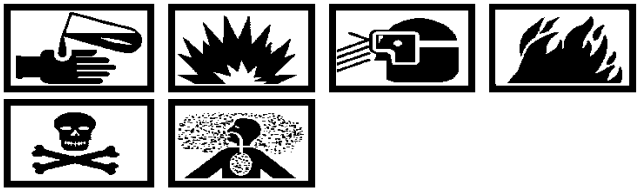

Sealing Compound Permatex No. 1372 or Loctite 30558 34

n. Coat six socket head screws (0.250–28) with Permatex 1372 or Loctite 30588 sealant. Install screws in the three jack–screw holes in each of the front and rear housing flanges.

27. **REAR HOUSING EXTERNAL COMPONENTS INSTALLATION.**

28. MOUNTING PAD COVER INSTALLATION.

Support Equipment Required

Part No./Type Designation	Nomenclature
–––	Wrench, torque (0–150 lb in.)

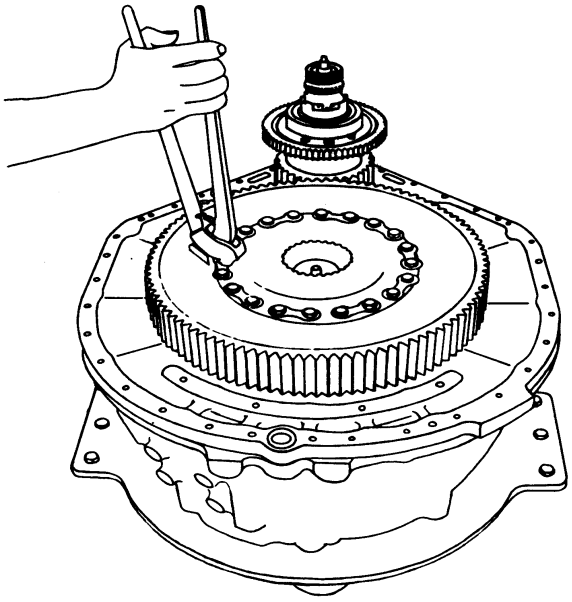

Figure 40. Bending Sun Gear Hub Tab Washer with 6797589 Bending Fixture

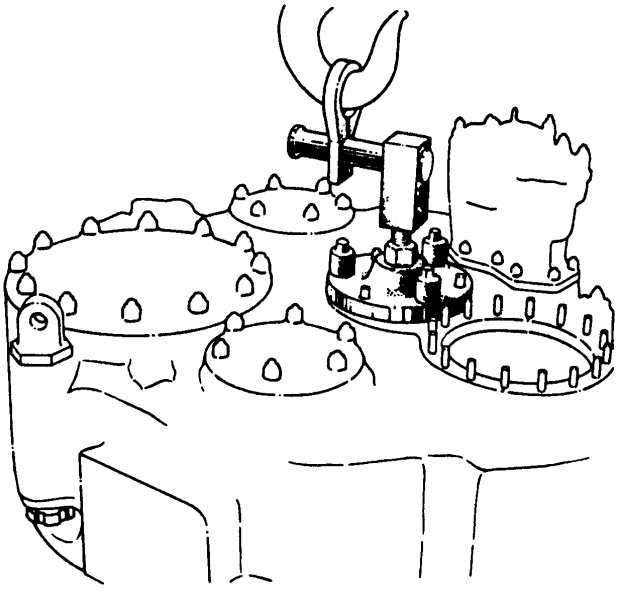

Figure 41. Handling Rear Housing Using 6799782 Lifting Adapter

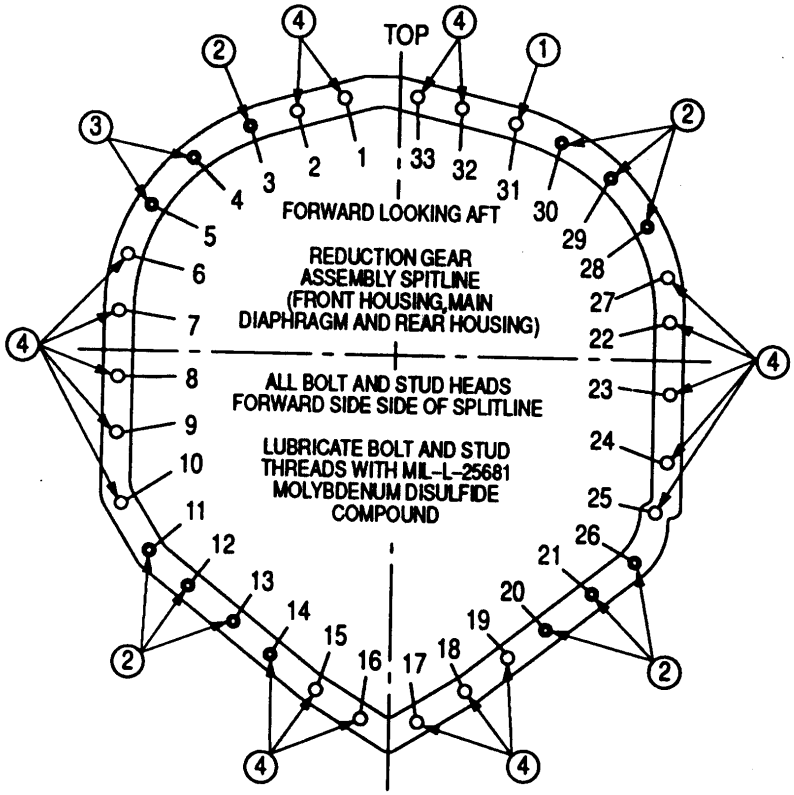

(1) BEARING BOLT. HOLE 31. USE WASHERS UNDER BOLT–HEAD AND SELF–LOCKING NUT. TORQUE NUT 140–170 LB IN.

(2) BOLTS. HOLES 3, 11 THRU 13, 20 THRU 22, 28 THRU 30. USE WASHERS UNDER BOLT–HEADS AND SELF–LOCKING NUTS. TORQUE NUTS 140–170 LB IN.

(3) STUDS (BOLTS). HOLES 4 AND 5. USE WASHERS UNDER HEADS AND PLAIN HEX NUTS. TORQUE NUTS 120–150 LB IN.

(4) STUDS. EXISTING AT LOCATION 1, 2, 6 THRU 10, 14 THRU 19, 23 THRU 27, 32, AND 33. USE WASHERS AND SELF–LOCKING NUTS. TORQUE NUTS 140–170 LB IN.

Figure 42. Reduction Gear Splitline

a. Install covers, as required on the tachometer, hydraulic pump, generator, alternator, starter drive, scavenge pump oil outlet pads. Refer to NAVAIR 02B–5DG–4 for applicable gaskets and attaching hardware. (QA)

b. Torque nuts 265–300 lb in. (QA)

29. OIL PUMP AND FILTER ASSEMBLY INSTALLATION.

Support Equipment Required

Part No./Type Designation	Nomenclature
---	Wrench, torque (0–150 lb in.)

Materials Required

Specification No./Part No.	Nomenclature
AS3085–120	Packing (1)
AS3085–131	Packing (1)
Permatex 1372 or Loctite 30588	Compound, sealing

CAUTION

Improper sealant application may cause leaks and/or pump malfunction.

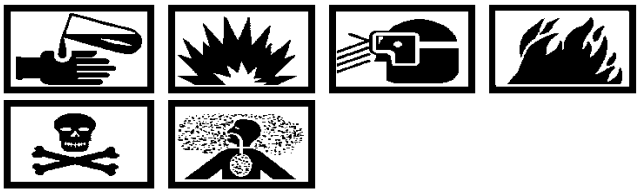

Sealing Compound Permatex No. 1372 or Loctite 30558 **34**

a. Apply a thin uniform coating of Permatex 1372 or Loctite 30588 sealing compound on the mounting base of the pump. Do not coat areas within 0.250 in. of packing grooves and edges of all openings. (QA)

b. Install packings.

c. Install pump and filter assembly on rear housing. Secure with washers and nuts.

d. Torque nuts 74–89 lb in. (QA)

30. OIL PRESSURE RELIEF VALVE ASSEMBLY INSTALLATION.

Support Equipment Required

Part No./Type Designation	Nomenclature
–––	Wrench, torque (0–300 lb in.)

Materials Required

Specification No./Part No.	Nomenclature
AN123029	Gasket, aluminum (1)
AS3085–016	Packing, preformed (1)
MS20995C32	Lockwire

a. Install packing and gasket on valve assembly. (QA)

b. Install valve assembly into rear housing.

c. Torque valve assembly 140–160 lb in. and lockwire. (QA)

31. SCAVENGE OIL OUTLET MAGNETIC PLUG BODY ASSEMBLY INSTALLATION.

Support Equipment Required

Part No./Type Designation	Nomenclature
6796735	Wrench, spanner, oil screen
–––	Wrench, torque (0–150 lb in.)
–––	Wrench, torque (0–500 lb in.)

Materials Required

Specification No./Part No.	Nomenclature
AN123033	Gasket, aluminum (1)
MS20995C32	Lockwire
6784924	Gasket (2)

a. Install gasket and body assembly on rear housing. Secure with washers and bolts.

b. Torque bolts 70–75 lb in. and lockwire in pairs. (QA)

c. Install gasket and cover on oil port. Secure with nuts.

d. Torque nuts 74–89 lb in. (QA)

e. Install scavenge oil screen assembly into body assembly. Tighten screen assembly using 6796735 fingertight using 6796735 spanner wrench (figure 43). (QA)

f. Install aluminum gasket on magnetic plug and thread into body assembly.

g. Torque plug 240–300 lb in. and lockwire to lug on body assembly. (QA)

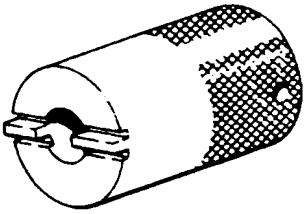

Figure 43. 6796735 Oil Screen Spanner Wrench

32. ACCELEROMETER (ELECTRIC PIEZO) AND MOUNTING BRACKET INSTALLATION.

a. Install bracket on studs at 9 o'clock position and secure with washers and nuts.

b. Torque nuts 75–89 lb in. (QA)

c. Install accelerometer on bracket, with connector pointing downward, and secure with screws and nuts.

d. Torque nuts 19–22 lb in. (QA)

33. **REDUCTION GEAR ASSEMBLY PLUGS.**

a. All or some of the plugs may have been removed. New preformed packings and gaskets are required when plug is installed in housing.

b. Refer to WP 037 00 for installation.

34. **PROPELLER SHAFT AXIAL MOVEMENT (END PLAY) CHECK.**

a. The propeller shaft axial movement (end play) shall be measured following assembly.

CAUTION

The propeller shaft end play check will be accompanied without disturbing the shaft and associated parts. Disturbing the parts before or during the check may result in an erroneous measurement.

b. Visually inspect to ensure thrust nut lock, thrust nut, propeller shaft oil seal, and thrust plate are properly installed. Do not disturb these parts before or during the check.

c. Install dial indicator at forward end of propeller shaft in a manner that total end play can be measured.

d. Take end play measurement as follows:

(1) Push shaft to its maximum rearward position and set indicator to zero.

(2) Pull shaft to its maximum forward position and record reading. Maximum allowable end play is 0.041 inches.

(3) Push shaft back to its maximum rearward position to confirm measurement. Indicator should read zero.

(4) Repeat axial movement check as necessary to confirm accurate measurement.

e. Reject reduction gear assembly when end play exceeds 0.041 inch.

35. **FRONT HOUSING EXTERNAL COMPONENTS INSTALLATION.**

36. REDUCTION GEAR STRUT INSTALLATION.

Support Equipment Required

Part No./Type Designation	Nomenclature
–––	Gage, feeler (0.001 in.)

a. Install the two reduction gear eyebolts, beveled washers and spanner nuts. Check eyebolts for seating using a 0.001 in. feeler gage. (QA)

b. Aligning and torquing to limits is accomplished by WP 027 00. Also, the reduction gear power section strut assemblies, eyebolt pins and shear nuts, and clevis bolts are installed and adjusted in WP 027 00.

37. PROPELLER CONTROL LINKAGE INSTALLATION (figure 44).

Support Equipment Required

Part No./Type Designation	Nomenclature
–––	Wrench, torque (0–150 lb in.)
–––	Wrench, torque (0–500 lb in.)

Materials Required

Specification No./Part No.	Nomenclature
MS20995C32	Lockwire
6781589	Gasket (1)

a. Install propeller control shaft gasket (5, figure 44) on reduction gear rear housing.

b. Install propeller control bellcrank and lever shaft assembly (4) and secure with two bolts (1). Torque bolts to 60–68 lb in. and lockwire.

c. Install the forward propeller control shaft and arm assembly (7) to the propeller control shaft pivot bolt & bearing assembly (3) (hole location 31) on reduction gear splitline.

d. Refer to WP 027 00 for final linkage adjustment.

38. **REDUCTION GEAR UNIT ASSEMBLY TRANSPORT OR STORAGE.**

Support Equipment Required

Part No./Type Designation	Nomenclature
6795905	Stand, turnover, engine component
6796832	Stand, reduction gear assembly, transportation and storage
6797682	Adapter, lifting, reduction gear assembly

a. Depending on the destiny and time the reduction gear unit will be used as well as the available facilities, it may be assembled immediately to the power section or stored. Refer to WP's 019 00, 021 00, 027 00, 028 00.

b. The reduction gear unit may be in a 6795905 engine component turnover–stand, 6796832 transportation or storage stand,or a packing container.

c. If the reduction gear unit is transferred to 6796832 transportation and storage stand, use 6797682 lifting adapter and hoist.

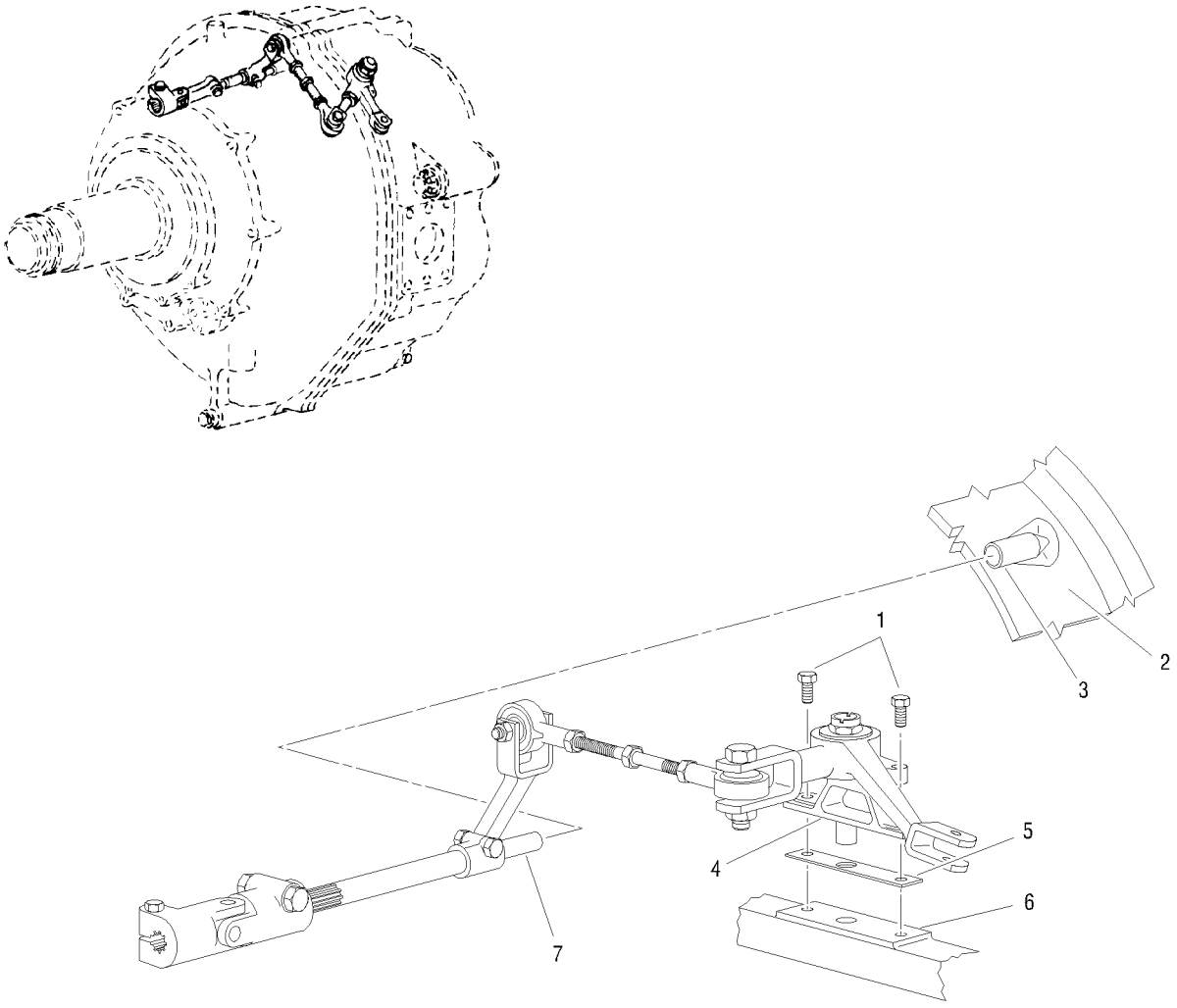

1. Bolt (2)
2. Reduction Gear Front Housing
3. Propeller Control Shaft Pivot Bolt & Bearing Assembly
4. Intermediate Propeller Control Bellcrank and Lever Shaft Assembly
5. Propeller Control Shaft Gasket
6. Reduction Gear Mounting Pad
7. Forward Propeller Control Shaft and Arm Assembly

Figure 44. Propeller Control Linkage

INTERMEDIATE MAINTENANCE

MAINTENANCE

TORQUEMETER

Reference Material

Torquemeter Unit and Safety Coupling Assembly–Removal and Installation . . . . . WP 028 00
Maintenance of Aeronautical Antifriction Bearings . . . . . NAVAIR 01–1A–503
Turbine Engine Cleaning Instructions . . . . . NAVAIR 07–1–504
Cleaning Materials . . . . . NAVAIR 07–1–503

Alphabetical Index

Subject Page No.
Cleaning 2
Inspection 4
Installation of Inner Ring 7
Torquemeter Mid–bearing Installation 4
Torquemeter Mid–bearing Removal 2

Record of Applicable Technical Directives

None

1. **TORQUEMETER MID–BEARING REMOVAL.**

Support Equipment Required

Part No./Type Designation	Nomenclature
6797754	Fixture, torquemeter shaft mid–bearing pulling
6797757	Plate, torquemeter mid–bearing inner ring puller
6797881	Retainer, torquemeter mid–bearing roller
–––	Hammer, plastic

NOTE

When the torquemeter is removed from the reduction gear, considerable disassembly of the torquemeter occurs. This WP continues disassembly to remove the mid–bearing from the torquemeter housing and shaft assemblies.

a. Remove lock tube retaining ring (16, figure 1) from front end of torquemeter housing.

b. Install the 6797881 mid–bearing roller retainer (figure 2) to keep rollers in place when bearing assembly (12, figure 1) is removed.

c. Remove bearing outer ring lock key (15), lock tube (14), and mid–bearing assembly (12) from housing (20).

d. Remove internal retainer (16) from bearing and lock tube.

e. Place the lock tube on a bench with the bearing ring down.

f. Move the bearing rollers inward to form a smaller diameter.

g. Remove lock tube (14) and bearing outer ring from the rollers and separator.

NOTE

A light tapping on the tube with a plastic hammer will usually move the rollers inward.

h. Use a small ended screwdriver and remove the retaining ring (13) from groove on inside of lock tube (14).

i. Separate the lock tube and bearing outer ring of roller bearing assembly (12).

j. Remove torquemeter mid–bearing inner ring (21) from torquemeter outer shaft.

k. Remove O–ring seal (5) from torquemeter shaft aft end.

l. Remove the bearing inner ring (21) from the outer shaft (4) using the 6797754 mid–bearing pulling fixture and 6797757 torquemeter mid–bearing inner ring puller plate (figures 3 and 4).

2. **CLEANING.**

Materials Required

Specification No./Part No.	Nomenclature
MIL–PRF–680, Type II	Solvent, cleaning

a. Follow cleaning procedure outlined in NAVAIR 07–1–503 and 07–1–504 and standard practices WPs, this manual unless otherwise specified herein.

Dry Cleaning Solvent
MIL–PRF–680, Type II **3**

b. Clean the torquemeter pickup by wiping it with a clean cloth dampened in MIL–PRF–680, Type II solvent, and air dry.

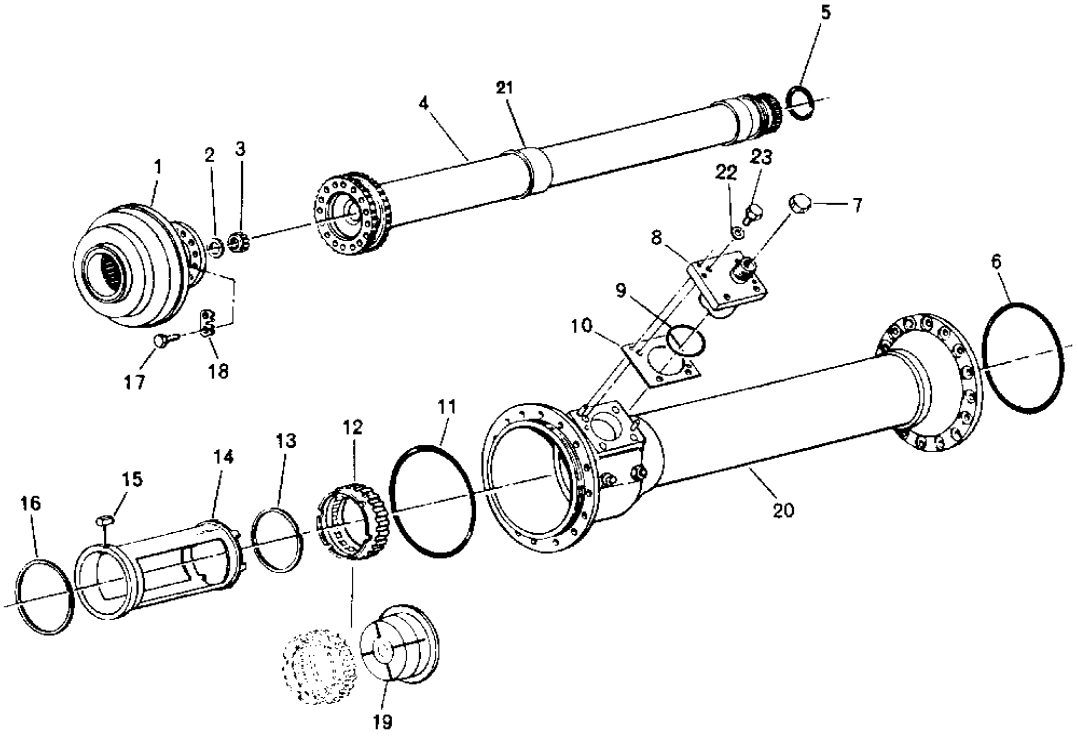

1. Safety Coupling Assembly
2. Key Washer
3. Spanner Nut
4. Torquemeter Inner and Outer Shaft Assembly
5. O–ring Seal
6. Preformed Packing
7. Protective Cap
8. Torquemeter Pickup
9. Preformed Packing
10. Pickup Adjusting Shim
11. Preformed Packing
12. Roller Bearing Assembly
13. Internal Retaining Ring
14. Bearing Lock Tube
15. Bearing Outer Ring Lock Key
16. Internal Retaining Ring
17. Bolt
18. Locktab
19. Torquemeter Midbearing Shipping Plug
20. Torquemeter Housing
21. Bearing Inner Ring
22. Washer
23. Bolt

Figure 1. Torquemeter Assembly

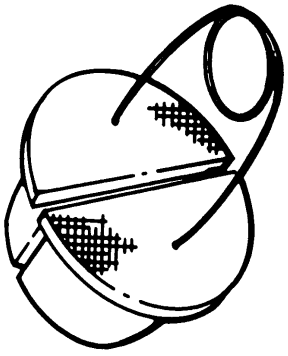

Figure 2. No. 6797881 Torquemeter Mid–bearing Roller Retainer

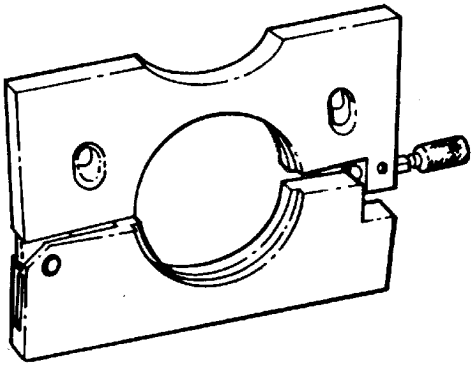

Figure 3. No. 6797754 Torquemeter Shaft Mid–bearing Pulling Fixture

3. **INSPECTION.**

Support Equipment Required

Part No./Type Designation	Nomenclature
AN/USM–311	Multimeter

a. The pickup assembly is acceptable for use providing a continuity check between the pins of the assembly shows a resistance within the limits specified. (QA)

Continuity Check:

Pins	Resistance (Ohms)
A to B	2.00 to 3.00
C to D	2.00 to 3.00

CAUTION

Tests are to be made with a low current type ohmmeter to avoid possible damage to the coils.

NOTE

The cable resistance of the pickup–to–indicator must be known before checking pickup resistance at the indicator end of the cable.

b. There shall be no continuity between any pins and the housing. (QA).

c. There shall be no continuity between pins A and C. (QA).

d. If pickup assembly has an open coil or if coil resistance is out of limits, replace the pickup.

e. Check pickup for evidence of damage due to torquemeter exciter teeth rub. The unit is acceptable if:

(1) The pickup contact area is not worn in excess of 0.005 inch.

(2) The epoxy resin sealant adjacent to pickup face is not chipped to the extent of leaving a crack next to the pickup face.

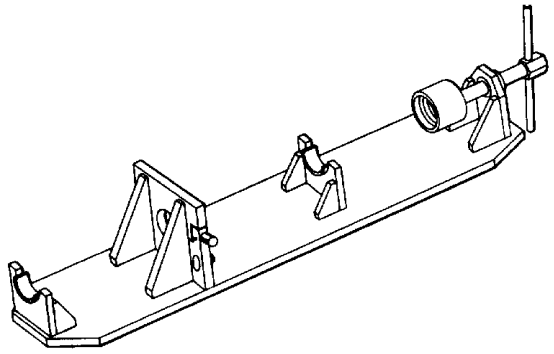

Figure 4. No. 6797757 Torquemeter Mid–bearing Inner Ring Puller Plate

(3) There is only slight deformation of pickup face due to rubbing (the pickup face is not spread out beyond 0.078 in. total width).

f. Inspect surfaces of assembly for damage. Check cable connection for crossed threads or loose pins. Replace unit if found defective.

g. Inspect mid–bearing as follows.

(1) Refer to maintenance of Aeronautical antifriction bearings, NAVAIR 01–1A–503.

(2) Inspect for roughness. Use hand feel test.

(3) Assemble bearing to shafts and check fit limits (see figure 5.) Refer to paragraph 6.

4. **TORQUEMETER MID–BEARING INSTALLATION.**

Support Equipment Required

Part No./Type Designation	Nomenclature
6797881	Retainer, mid–bearing, torquemeter

Materials Required

Specification No./Part No.	Nomenclature
MIL–PRF–23699	Oil, lubricating

a. Position lock tube (5, figure 6) on a bench with tangs up.

b. Check that spiral lock snap retaining ring (7) is not turned inside out which would result in twice the normal thickness at the ends thus preventing satisfactory installation. (See figure 7.)

c. Insert spiral retaining ring in a vertical position into lock tube (5, figure 6). (QA).

d. Go past lock tube ring groove; then rotate ring to a horizontal position.

CAUTION

Use care accomplishing step e. to prevent binding with the bearing outer ring.

e. Adjust ring so ends are located at center of one of lock tube tangs. (QA).

f. If bearing inner ring (2) is in bearing, remove it; it is installed later on torquemeter shaft (1). (This may be a new bearing which would have the inner ring installed or the old inner ring which was removed from the torquemeter shaft assembly may have been put in the bearing for safe keeping.)

g. While outer ring (3) is held, move rollers inward to form a smaller diameter. (Tapping outer ring of a bearing lightly moves rollers to smallest diameter.)

h. Remove outer ring from rollers and separator, and carefully place rollers and separator on a clean piece of paper. (Do not permit rollers to fall out).

i. Record bearing outer ring serial number. (QA).

j. Position outer ring on top of lock tube.

k. Engage tangs in rectangular notches.

CAUTION

Make sure snap ring is fully engaged in each groove, or partial separation of bearing might occur.

l. While outer ring is held in place, reach through it and slowly pull up on retaining ring until it snaps into grove in lock tube. (QA).

m. Hold lock tube and slowly raise outer ring until retaining ring snaps into groove in outer ring. (QA).

n. Position bearing separator with serial number down.

Lubricating Oil, MIL–PRF–23699 2

o. Lubricate separator and rollers with MIL–PRF–23699 engine oil.

p. Turn lock tube with tangs facing downward and slide outer ring over rollers and separator.

q. Check that rollers and separator are not cocked in the outer ring. (QA).

r. Move bearing rollers outward by reaching through openings in side of lock tube.

s. Rotate tube and bearing assembly tang ends up and insert 6797881 midbearing rollers retainer. (See figure 2.)

t. Install lock key (6, figure 7) in slot at front of lock tube. (5).

u. The fit should be tight and require driving the key.

v. Insert lock tube assembly into housing (8) aligning key slot and installed key.

w. Lightly tap tube until seated into place.

x. Install retaining ring in groove at front end of housing

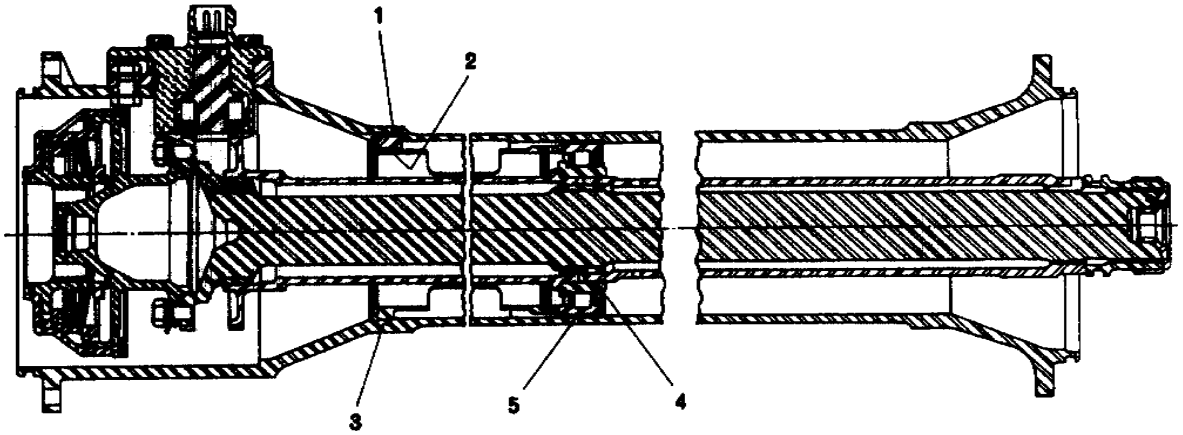

Ref. No.	Description	Minimum	Maximum	Replace
1	Lock tube Key-Housing	0.0005L	0.0080L	------
2	Lock tube Key-Lock tube	0.0015T	0.0000	------
3	Housing-Lock tube	0.002L	0.016L	
4	Outer Shaft-Center bearing inner ring	0.0015T	0.0004T	
5	Housing-Center bearing	0.0020L	0.0050L	

Figure 5. Torquemeter Shaft Fit Limits

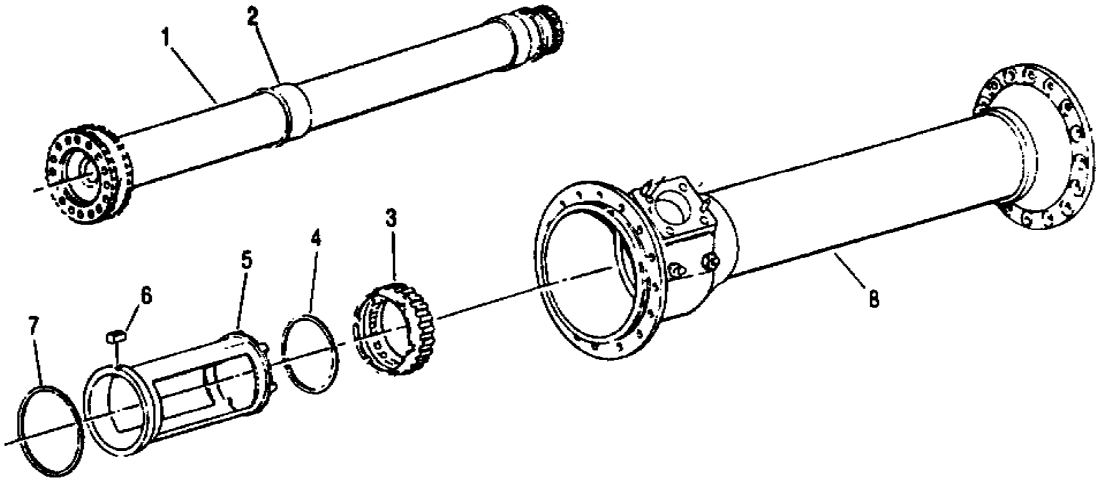

1. Torquemeter Inner and Outer Shaft Assembly
2. Bearing Inner Ring
3. Roller Bearing
4. Internal Retaining Ring
5. Bearing Lock Tube
6. Bearing Lock Key
7. Internal Retaining Ring
8. Torquemeter Housing

Figure 6. Torquemeter Mid-bearing Details

y. Make certain ring is fully engaged and seated. (If retaining ring comes out, ring will rotate with the shaft; also, the lock tube would move forward and load midbearing rollers against inner ring front shoulders.) (QA)

z. The lock tube key to housing tolerance is 0.0005L minimum to 0.0080L maximum. The lock tube key to lock tube tolerance is .0015T minimum to 0.0000 maximum. The housing to lock tube tolerance is 0.002L minimum to 0.016L maximum. The outer shaft to center bearing inner ring tolerance is 0.0015T minimum to 0.0004T maximum. The housing to bearing outer ring tolerance is 0.0020L minimum to 0.0050L maximum. (QA).

5. INSTALLATION OF INNER RING. (See figure 6.)

Support Equipment Required

Part No./Type Designation	Nomenclature
6796304	Cover, torquemeter shaft pick-up teeth
6797756	Pusher, inner ring, mid–bearing torquemeter
---	Hammer, plastic
---	Gloves, insulated

Materials Required

Specification No./Part No.	Nomenclature
MIL–PRF–23699	Oil, lubricating

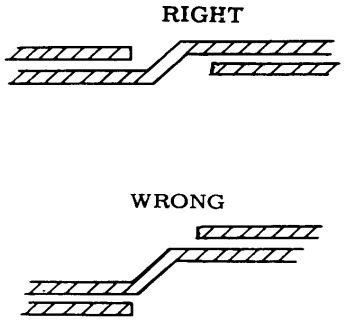

Figure 7. Spiral Lock Snap Ring Installation

a. Record serial number of inner ring. (It should be the same as outer ring.)

b. Install 6796304 torquemeter shaft pickup teeth covers. (This is not only to protect the teeth but to serve as a stand to hold the torquemeter shaft upright as the inner ring is installed.) (See figure 8.)

c. Check that outer shaft to bearing inner ring tolerance is 0.0015T minimum to 0.0004T maximum. (QA).

Lubricating Oil, MIL–PRF–23699 2

d. Lubricate torquemeter shaft midbearing journal with MIL–PRF–23699 engine oil.

WARNING

Heated parts will cause skin damage (burns). Use clean insulated gloves to handle parts.

e. Heat bearing inner ring in MIL–PRF–23699 engine oil to 225°F maximum.

NOTE

It is not necessary to cool the shaft before installing inner ring.

Locate inner ring shoulder toward front.

f. Using insulated gloves, slip bearing inner ring over torquemeter shaft.

g. As shaft assembly is held, slip on 6797756 inner ring pusher. (See figure 9.)

CAUTION

Do not use torque shaft wheel as backup while tapping tool. The shaft should be held by hand.

NOTE

Accomplish tapping operation quickly while inner ring is still hot.

h. Using a plastic hammer, tap the pusher lightly as required to seat the inner ring.

i. If inner ring binds or does not seat properly on shaft shoulder, remove and inspect inner ring. Refer to paragraph 4. Also inspect the torque shaft shoulder.

j. Reinstall inner ring per steps a. through i.

CAUTION

If inner ring is defective, a completely new bearing must be installed.

k. To complete torquemeter installation, refer to WP 028 00.

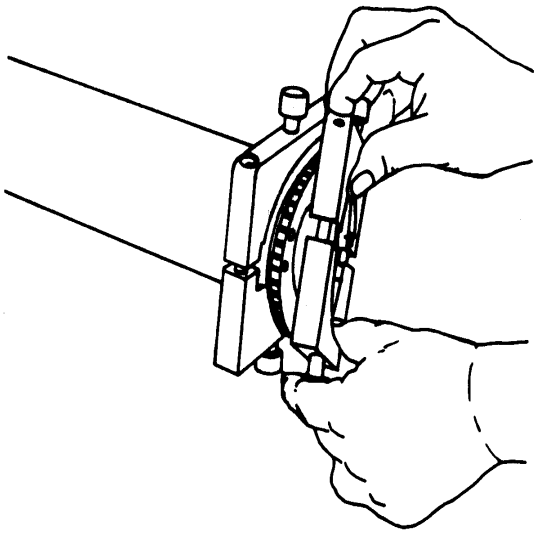

Figure 8. Installing 6796304 Torquemeter Shaft Pickup Teeth Covers

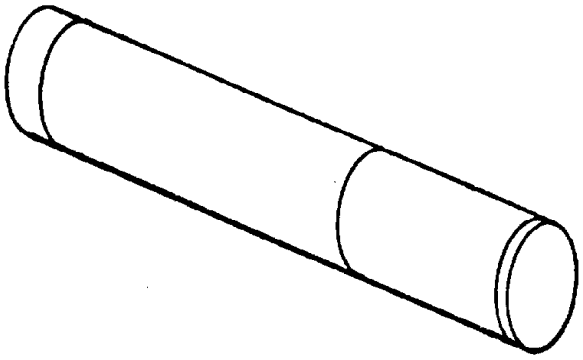

Figure 9. No. 6797756 Torquemeter Midbearing Inner Ring Pusher

INTERMEDIATE MAINTENANCE

DISASSEMBLY

ACCESSORY DRIVE HOUSING COVER, GEARS, SEALS, PLUGS AND SCAVENGE PRESSURE RELIEF VALVE

Reference Material

Accessory Drive Housing Removal and Installation . . . . . WP 029 00

Alphabetical Index

Subject Page No.

Accessory Drive Housing Cover Removal 4
Accessory Drive Side Shaftgear Removal 4
Accessory Idler Gear Removal 5
Center Accessory Drive and Main Drive Shaft Gear Removal 5
Disassembly 4
General 2
Oil Seal Removal 4
Side Accessory Drive and Fuel Pump Drive Shaftgear Removal 5
Tachometer Drive Gear Removal 5

Record of Applicable Technical Directives

None

1. **GENERAL.**

Support Equipment Required

Part No./Type Designation	Nomenclature
3826	Lift, accessory drive housing
6796987	Stand, turnover, engine components
6797707	Adapter, mounting, accessory drive housing to 6796987 stand
6799969	Protector, accessory main drive shaft gear

a. Remove accessory drive housing from power section. Refer to Accessory Drive Housing Assembly, Removal and Installation, WP 029 00.

NOTE

The accessories drive housing provides mounting pads on rear face of housing for fuel pump, and fuel control. Mounting pads for speed sensitive control, speed sensitive valve, main oil pump, and oil filter are located on front face of housing. The T56–A–427 has an external scavenge oil pump on the rear face.

At this point in disassembly accessories have been removed from accessories drive housing.

The bottom drain plug was removed to drain the oil and temporarily replaced.

The accessory drive housing was installed in 6796987 engine component turnover stand using 6797707 accessory housing mounting adapter. (Refer to WP 029 00.)

b. Remove drain plug (16, figure 3) and preformed packing (17).

c. If required, to safely handle accessory drive housing, use a 3826 lifting adapter which screws into drain plug hole and a hoist. (See figure 1.)

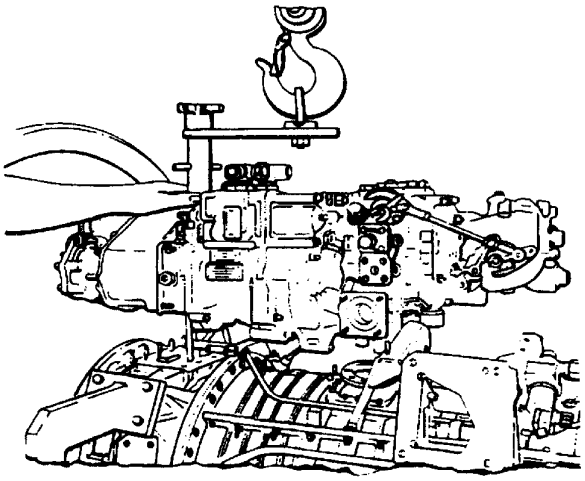

Figure 1. Removing Accessory Drive Housing with 3826 Lift

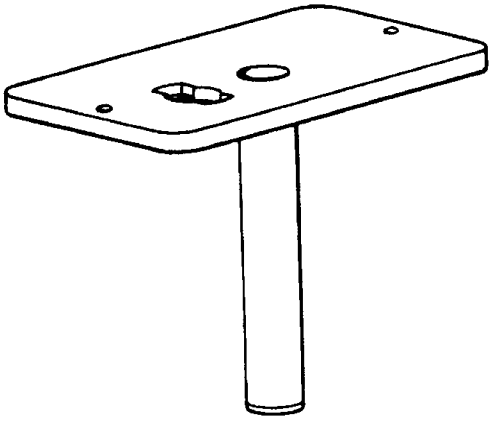

Figure 2. No. 6799969 Accessory Main Drive Shaft Protector

d. If 6799969 main drive shaft protector is mounted on housing, remove it to gain access to the scavenge pressure relief valve and main drive shaftgear and bearing. (See figures 2 and 3.)

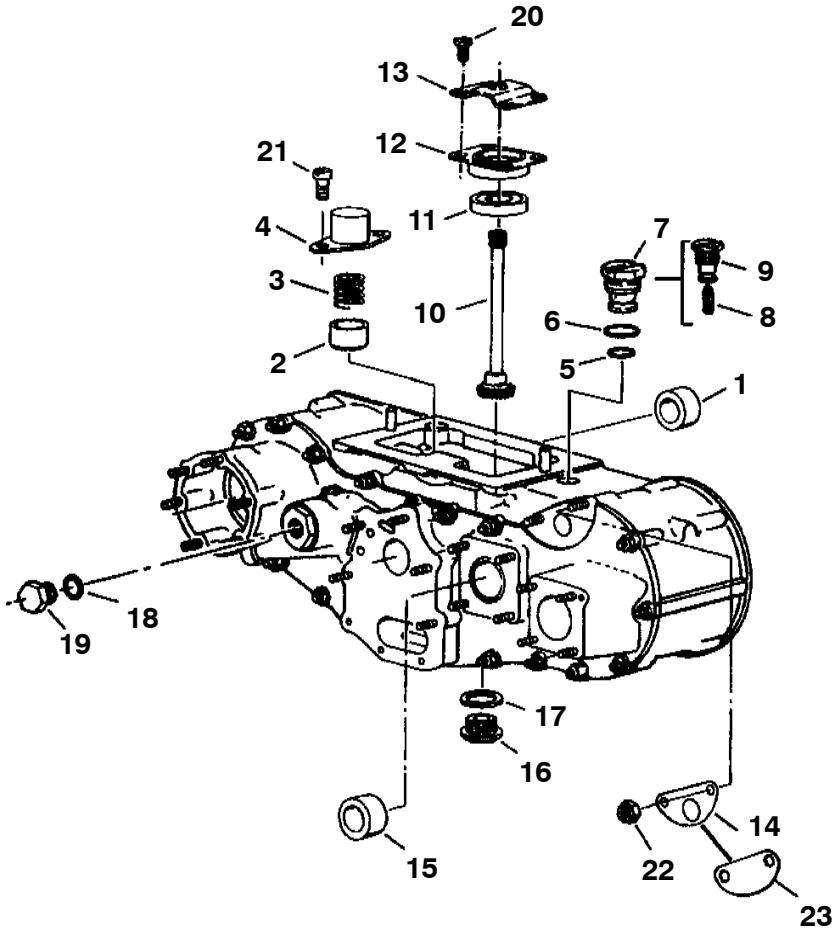

1. Plain Encased Seal
2. Scavenge Pressure Relief Valve
3. Scavenge Pressure Relief Valve Spring
4. Valve By–pass Cap
5. Preformed Packing
6. Preformed Packing
7. Oil Pressure Reducing Plug Assembly
8. Metering Plug
9. Oil Pressure Reducing Plug
10. Accessory Main Drive Shaftgear
11. Annular Ball Bearing
12. Bearing Cage
13. Oil Baffle
14. Vent Fitting Gasket
15. Plain Encased Seal
16. Gasket Seal Straight Thread Plug
17. Preformed Packing
18. Preformed Packing
19. Plug
20. Screw
21. Screw
22. Nut
23. Vent Port Cover

Figure 3. Accessories Housing

2. **DISASSEMBLY.**

Support Equipment Required

Part No./Type Designation	Nomenclature
6796203	Puller plate, accessory main drive bearing
6796249	Support, accessory drive bearing removal.

a. Remove nuts (22, figure 3) holding vent cover port (23). Remove cover and vent fitting gasket (14).

b. Remove screws (20) from oil baffle (13) and main drive shaftgear bearing cage (12). Detach oil baffle, cage, and shaftgear assembly (10 and 11). Remove cage.

c. Position 6796249 bearing removal support and 6796203 bearing puller plate on an arbor press, and remove bearing (11) from shaftgear (10). (See figure 4.)

d. Remove screws (21, figure 3) holding pressure relief valve by–pass cap (4). Remove cap, relief valve spring (3) and scavenge pressure relief valve (2).

e. Remove oil pressure reducing plug assembly (7) and preformed packings (5 and 6).

3. **OIL SEAL REMOVAL.**

Support Equipment Required

Part No./Type Designation	Nomenclature
6796460	Puller, oil seal, tachometer–generator drive
6796461	Puller, oil seal, fuel pump drive

a. Use 6796460 puller (figure 5) to pull the tachometer drive spur gear oil seal from accessory drive housing (15, figure 3).

b. Use 6796461 puller (figure 6) to pull the fuel pump drive shaft seal. (1, figure 3).

c. Place threaded end of appropriate puller (figure 5 or 6) in seal center hole and tighten until the threads are firmly gripping the seal.

d. Use sliding hammer to remove the seal.

4. **ACCESSORY DRIVE HOUSING COVER REMOVAL.**

a. Remove the remaining nuts and washers attaching the cover (2, figure 7) to the housing. Remove the cover assembly and brackets.

b. Remove screws (9), filter by–pass valve (8) and gasket (7).

c. Remove the seat (4), ball (5) and spring (6) from the by–pass valve.

d. Remove the accessory housing seal from the cover.

e. Remove the plug (22) and preformed packing (21) from the pressure line adapter and the lower right side of cover.

f. Remove the pressure line adapter (19) and preformed packing (17) from the front of the cover.

g. Remove plug (28, figure 8) and preformed packing (27) from left side of housing.

5. **ACCESSORY DRIVE SIDE SHAFTGEAR REMOVAL.**

Support Equipment Required

Part No./Type Designation	Nomenclature
6796205	Puller plate, bearing
6796209	Plug
6796249	Support, accessory drive bearing removal
6796593	Wrench, retainer bolt spanner
6796594	Holder

a. Remove the gear assembly (22, figure 8) from the housing.

b. Place the assembly in 6796594 side shaftgear holder and with 6796593 retainer bolt spanner wrench remove the speed sensitive gear retainer bolt (26) and tab lockwasher (25). (See figure 9.)

c. Remove internal spline spur gear (24, figure 8).

d. Position 6796249 bearing removal support on an arbor press and with 6796205 bearing puller plates and 6796209 plug, remove the bearings (23). (See figure 10.)

6. **TACHOMETER DRIVE GEAR REMOVAL.**

Support Equipment Required

Part No./Type Designation	Nomenclature
6796201	Puller plate, bearing
6796209	Plug
6796249	Support, accessory drive bearing removal

a. Remove gear assembly (20, figure 8) from the housing.

b. Position 6796249 bearing removal support on an arbor press and with 6796201 bearing puller plates and 6796209 plug remove the bearings (21). (See figure 11.)

7. **ACCESSORY IDLER GEAR REMOVAL.**

Support Equipment Required

Part No./Type Designation	Nomenclature
6796201	Puller plate, bearing
6796209	Plug
6796249	Support, accessory drive bearing removal

a. Remove accessory idler gear assembly (18, figure 8) from housing.

b. Position 6796249 bearing removal support on an arbor press and with 6796201 bearing puller plates and 6796209 plug, remove the bearings (19). (See figure 12.)

8. **CENTER ACCESSORY DRIVE AND MAIN DRIVE SHAFTGEAR REMOVAL.**

Support Equipment Required

Part No./Type Designation	Nomenclature
6796202	Puller plate, bearing
6796204	Puller plate, bearing
6796208	Plug
6796249	Support, accessory drive bearing removal

a. Remove center accessory drive and main drive shaft gear assemblies (14 and 15, figure 8) from housing.

b. Remove oil pump drive shaft (17) from the main drive shaftgear (15).

c. Position 6796249 bearing removal support on an arbor press and with 6796204 bearing puller plate and 6796208 plug, remove front bearing (16). (See figure 13.)

d. Position center gear and 6796202 bearing puller plate on 6796249 bearing removal support. (See figure 14.) Using 6796208 plug remove rear bearing (16, figure 8).

9. **SIDE ACCESSORY DRIVE AND FUEL PUMP DRIVE SHAFTGEAR REMOVAL**.

Support Equipment Required

Part No./Type Designation	Nomenclature
6796201	Puller plate, bearing
6796209	Plug
6796249	Support, accessory drive bearing removal

a. Remove side accessory drive and fuel pump drive shaft gear assembly (12, figure 8) from housing.

b. Position 6796249 bearing removal support on an arbor press and with 6796201 bearing puller plate and 6796209 plug, remove the bearings (13). (See figure 15.)

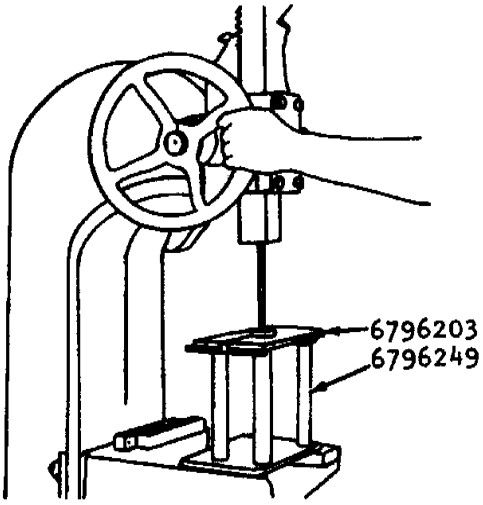

Figure 4. Removing Accessory Drive Main Drive Shaftgear Bearing Using 6796249 Bearing Removal Support and 6796203 Bearing Puller Plate

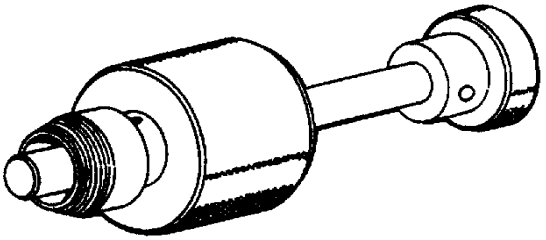

Figure 6. No. 6796461 Fuel Pump Drive Oil Seal Puller

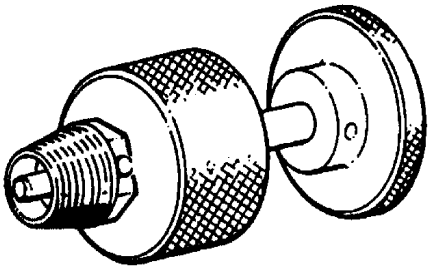

Figure 5. No. 6796460 Accessories Tachometer-Generator Drive Oil Seal Puller

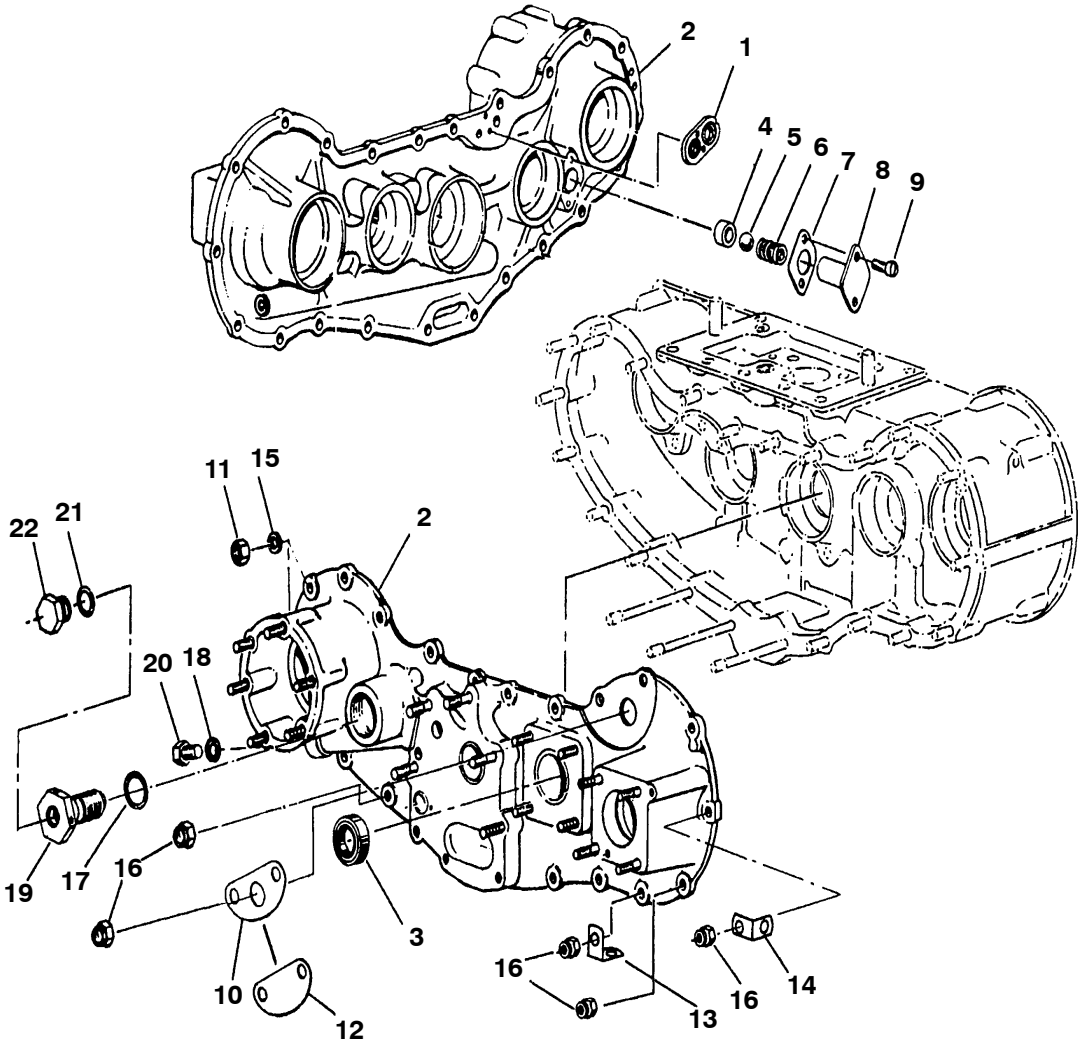

1. Seal Plate
2. Cover
3. Spur Gear Seal
4. Bypass Valve Seat
5. Ball
6. Spring
7. Gasket
8. Valve Body
9. Screw
10. Gasket
11. Nut
12. Cover Plate
13. Bracket
14. Bracket
15. Washer
16. Nut
17. Preformed Packing
18. Preformed Packing
19. Pressure Line Adapter
20. Plug
21. Preformed Packing
22. Plug

Figure 7. Accessory Drive Housing Cover Details

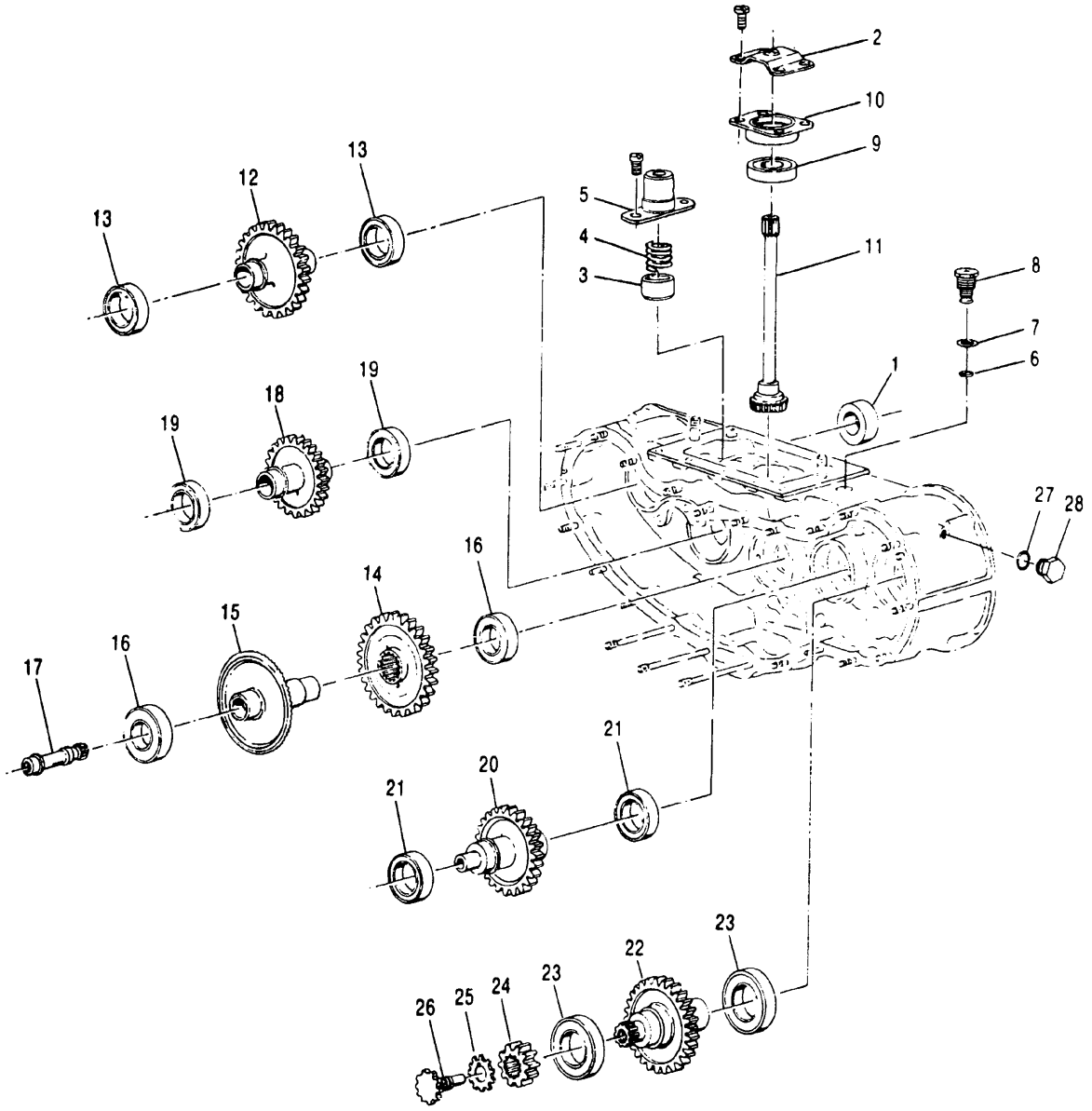

1. Side Accessory Drive and Fuel Pump Drive Shaft–gear Seal
2. Oil Baffle (PPC 47 inc.)
3. Valve
4. Spring
5. Valve Cap
6. Preformed Packing
7. Preformed Packing
8. Oil Pressure Reducing Plug
9. Bearing
10. Bearing Cage
11. Main Drive Shaftgear
12. Side Accessory Drive and Fuel Pump Drive Shaftgear
13. Bearing
14. Accessory Center Drive Gear
15. Main Drive Shaftgear
16. Bearing
17. Oil Pump Drive Shaft
18. Accessory Idler Gear
19. Bearing
20. Tachometer Drive Gear
21. Bearing
22. Accessory Drive Side Shaftgear
23. Bearing
24. Spur Gear
25. Tab Lockwasher
26. Retainer Bolt
27. Preformed Packing
28. Plug

Figure 8. Accessory Housing Gearing Details

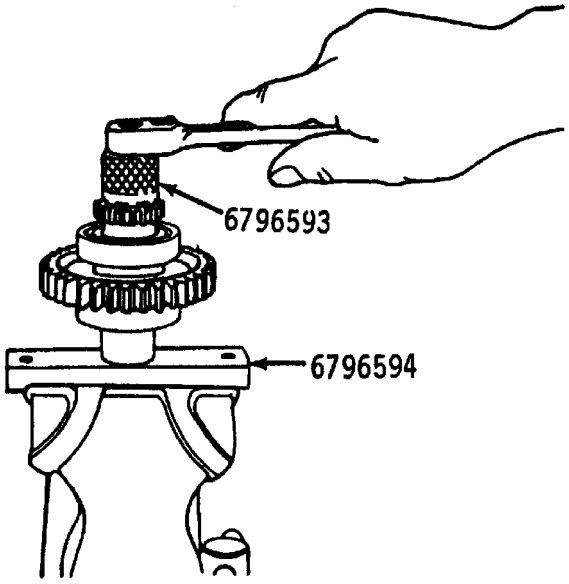

Figure 9. Removing the Retainer Bolt from the Accessory Drive Side Shaftgear

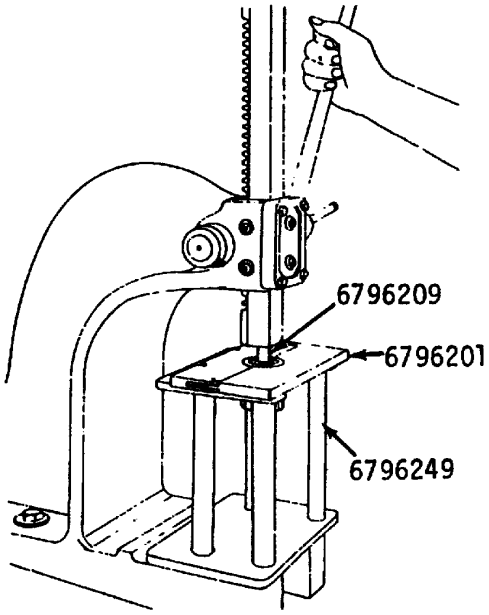

Figure 11. Removing Tachometer Drive Gear Bearing

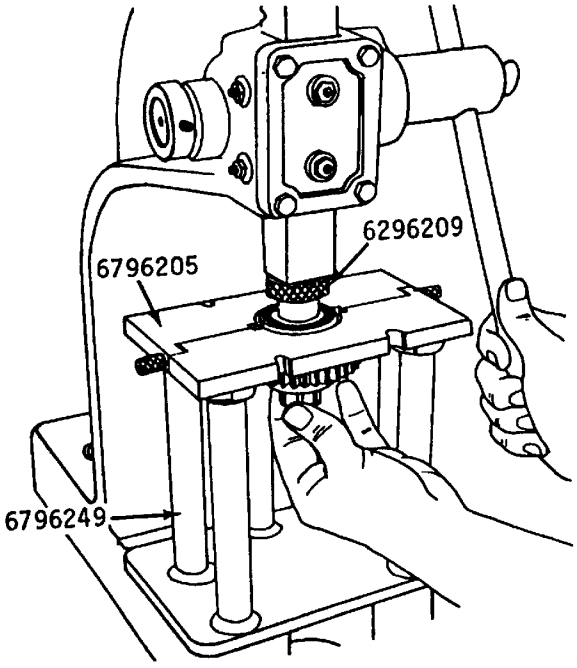

Figure 10. Removing Accessory Drive Side Shaftgear Bearing

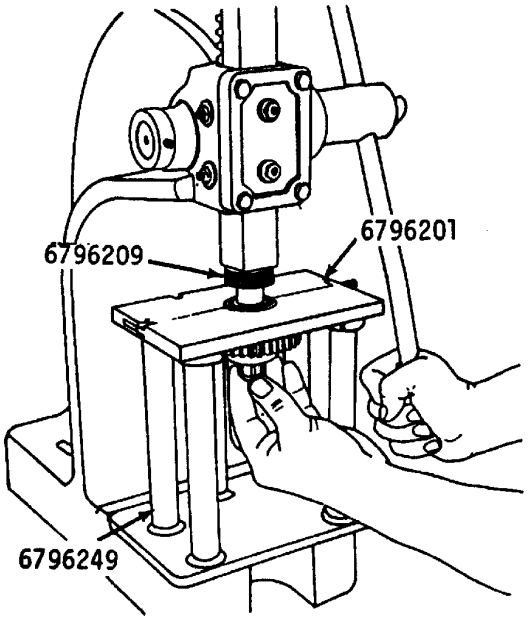

Figure 12. Removing Accessory Drive Idler Shaftgear Bearing

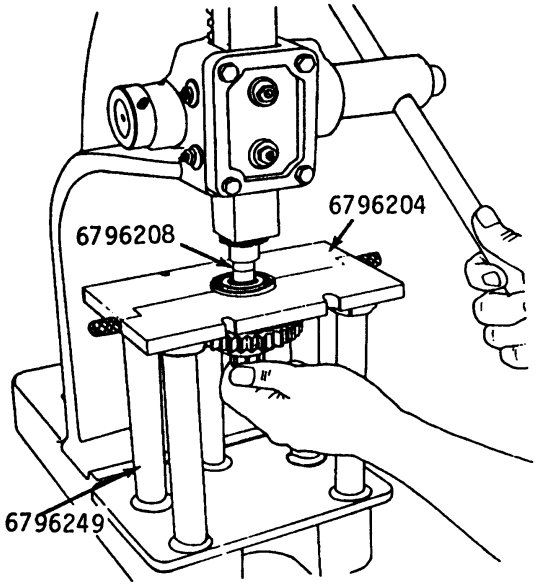

Figure 13. Removing Accessory Main Drive Shaft Bearing

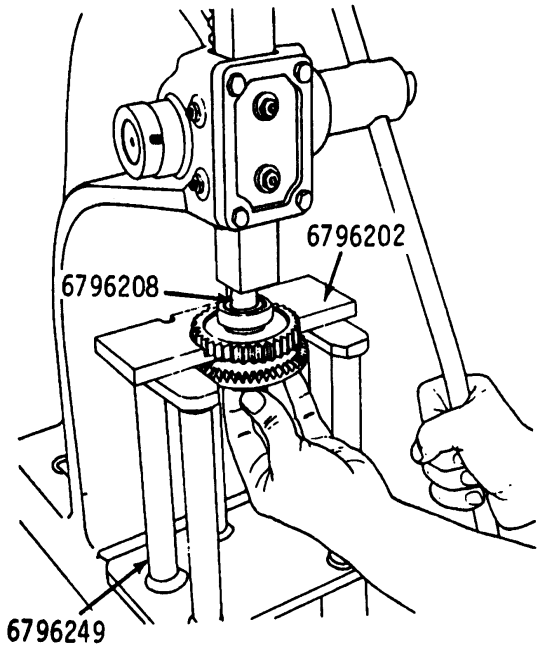

Figure 15. Removing the Side Accessory Drive and Fuel Pump Drive Shaftgear Bearing

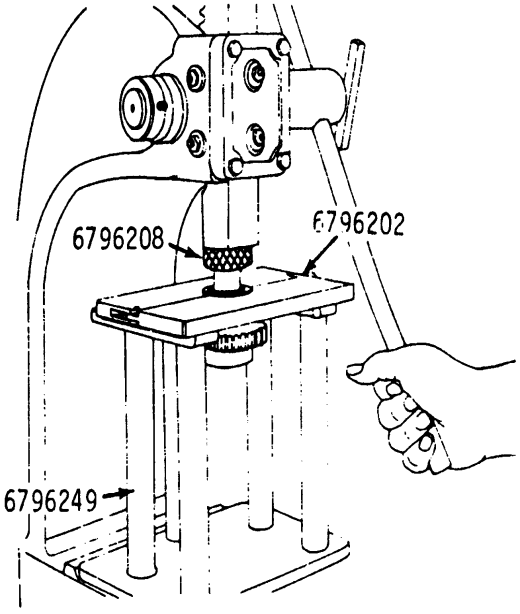

Figure 14. Removing Center Accessory Drive Gear and Bearing from the Main Drive shaft

INTERMEDIATE MAINTENANCE

CLEANING, INSPECTION, REPAIR

ACCESSORY DRIVE HOUSING PARTS

Reference Material

Accessory Drive Housing Cover, Gears, Seals, Plugs, and Scavenge Relief Valve – Assembly . . . . . WP 044 00

Cleaning, Standard Practices . . . . . WP 013 00

Inspection and Non–Destructive Testing (NDT) – Standard Practices . . . . . WP 014 00

Alphabetical Index

Subject	Page No.
Cleaning	2
Inspection	3
Repair	3

Record of Applicable Technical Directives

None

1. **CLEANING.**

Materials Required

Specification No./Part No.	Nomenclature
MIL–C–6529, Type 1	Compound, rust preventive
MIL–C–5546	Solvent, cleaning, steel
MIL–PRF–6081, grade 1010	Oil, lubricating
MIL–M–7752	Metal cleaner (silicate soap)
MIL-PRF-680, Type II	Solvent, cleaning

NOTE

If rebuild is not to occur soon after disassembly but time in storage is not extensive, cover the housing to keep it clean. Existing oil on the steel parts will prevent rusting.

a. Inspect the parts prior to cleaning because cleaning sometimes removes evidence, such as a burned (hot) spot, which can lead to finding a possible malfunction. Then clean and re–inspect the component.

b. Use care in separating metals for cleaning. (Cleaners for steel parts will damage nonferrous ones.) Refer to standard practices (WP 013 00).

Dry Cleaning Solvent MIL–PRF–680, Type II **3**

Dry Cleaning Solvent (Isoprep) **8**

c. The cleaning solvent or metal cleaner recommended for non–ferrous parts is MIL–PRF–680, Type II or MIL–M–7752.

d. Rinse the parts with water after using MIL–M–7752. (Do not use rust preventives on magnesium and aluminum parts.)

Dry Cleaning Solvent MIL–C–5546 **42**

e. Clean steel parts with MIL–C–5546.

Dry Cleaning Solvent MIL–PRF–680, Type II **3**

f. Rinse the parts with water and spray with MIL–PRF–680 Type II.

Corrosion Preventive Compound MIL–C–6529 **6**

Lubricating Oil, MIL–PRF–6081, (Grade 1010) **7**

g. Slosh the parts in a rust–preventive compound made of one part MIL–C–6529, Type 1, and three parts MIL–PRF–6081, grade 1010 oil.

2. **INSPECTION.**

Materials Required

Specification No./Part No.	Nomenclature
A–A–1206	Abrasive cloth or hand burnishing stone

a. The main drive shaftgear bearing is handled and inspected per WP 014 00.

b. Check shaftgear bearing fit prior to installation. Refer to WP 044 00 for fit limits.

c. Check for damage on threaded parts such as plugs, studs and screws. Replace if necessary.

d. Check splines and gear on main drive shaftgear for wear; also, check shaft for straightness (concentricity, runout).

3. **REPAIR.**

a. Replace any part found unserviceable.

INTERMEDIATE MAINTENANCE

ASSEMBLY

ACCESSORY DRIVE HOUSING COVER, GEARS, SEALS, PLUGS AND SCAVENGE PRESSURE RELIEF VALVE

Reference Material

Accessory Drive Housing Gearbox – Assembly . . . . . WP 029 00

Alphabetical Index

Subject	Page No.
Accessory Center Drive Gear and Main Drive Shaftgear	4
Accessory Drive Side Shaftgear Installation	4
Accessory Drive Housing Cover Installation	4
Accessory Idler Gear Installation	2
Accessory Main Drive Shaftgear Installation	2
Plugs and Valve	8
Seals Installation	8
Seals, Plugs, Relief Valve Installation	6
Side Accessory Drive and Fuel Pump Drive Shaftgear Installation	2
Speed Sensitive Control Drive Shaft Oil Seal Installation	10
Tachometer Drive Gear Installation	4

Record of Applicable Technical Directives

None

1. **ACCESSORY MAIN DRIVE SHAFTGEAR INSTALLATION.**

Support Equipment Required

Part No./Type Designation	Nomenclature
6796211	Plate, bearing installation
6796249	Support, accessory drive bearing removal
6796254	Plug, installation
6796987	Stand, engine component turnover
6799969	Protector, accessories main drive shaftgear
– –	Wrench, torque (0–50 lb in.)

Materials Required

Specification No./Part No.	Nomenclature
MS20995C32	Lockwire

a. Refer to WP 029 00 for installation of accessories drive housing into the 6796987 engine component turnover stand.

NOTE

Check all accessory drive shaft ball bearings for freedom of rotation after installation on the shafts. Also, all gears shall have end play after installation.

b. Press the bearing (9, figure 1) on accessory main drive shaftgear (11) using 6796249 bearing removal support, 6796211 bearing installation plate, and 6796254 installation plug. (See figure 2.)

c. Position the bearing with trade marks toward the splined end of the shaft. Refer to table 1, Ref 1, for fit limits. (QA).

d. Insert the assembly in the bearing cage (10, figure 1) and install the gear assembly in the housing. Refer to table 1, Ref 2, for fit limits. (QA).

e. Install oil baffle (2) over shaft and secure baffle and cage with four screws. Torque screws 22–26 lb in. and lockwire. Install 6799969 main drive shaftgear protector. (See figure 3.) (QA).

Table 1. Assembly Fit

Ref No.		MIN	MAX
1.	Bearings–Gearshaft	0.0007T	0.0005L
2.	Bearings–Brg Cage	0.0000	0.0025L
3.	Center gear front cage–Brg Cage	0.0002L	0.0025L
4.	Side shaft gear frt brg–Brg Cage	0.0001L	0.0025L
5.	Side shaftgear rear brg–Brg Cage	0.0002L	0.0025L

NOTE

0.0000 is tight fit

2. **SIDE ACCESSORY DRIVE AND FUEL PUMP DRIVE SHAFTGEAR INSTALLATION**.

Support Equipment Required

Part No./Type Designation	Nomenclature
6796209	Plug, accessory drive shaft gear
6796211	Installation plate, bearing
6796355	Expander, oil seal, accessory drive shaft

a. Press the bearings (13, figure 1) on each side of the gear (12) using 6796209 accessory drive shaftgear plug (figure 4) and 6796211 bearing installation plate (figure 2). Refer to table 1, Ref 1, for fit limits. (QA).

b. Insert the assembly in housing. Refer to table 1, Ref 2, for fit limits. (QA).

c. Install 6796355 seal expander (figure 5). Install oil seal over expander shaft.

3. **ACCESSORY IDLER GEAR INSTALLATION**.

Support Equipment Required

Part No./Type Designation	Nomenclature
6796211	Installation plate, bearing

a. Press bearings (19, figure 1) on front and rear of gear (18) using 6796211 installation plate. Refer to table 1, item 1, for fit limits. (QA).

b. Install the assembly in the housing. Refer to table 1, Ref 3, for fit limits. (QA).

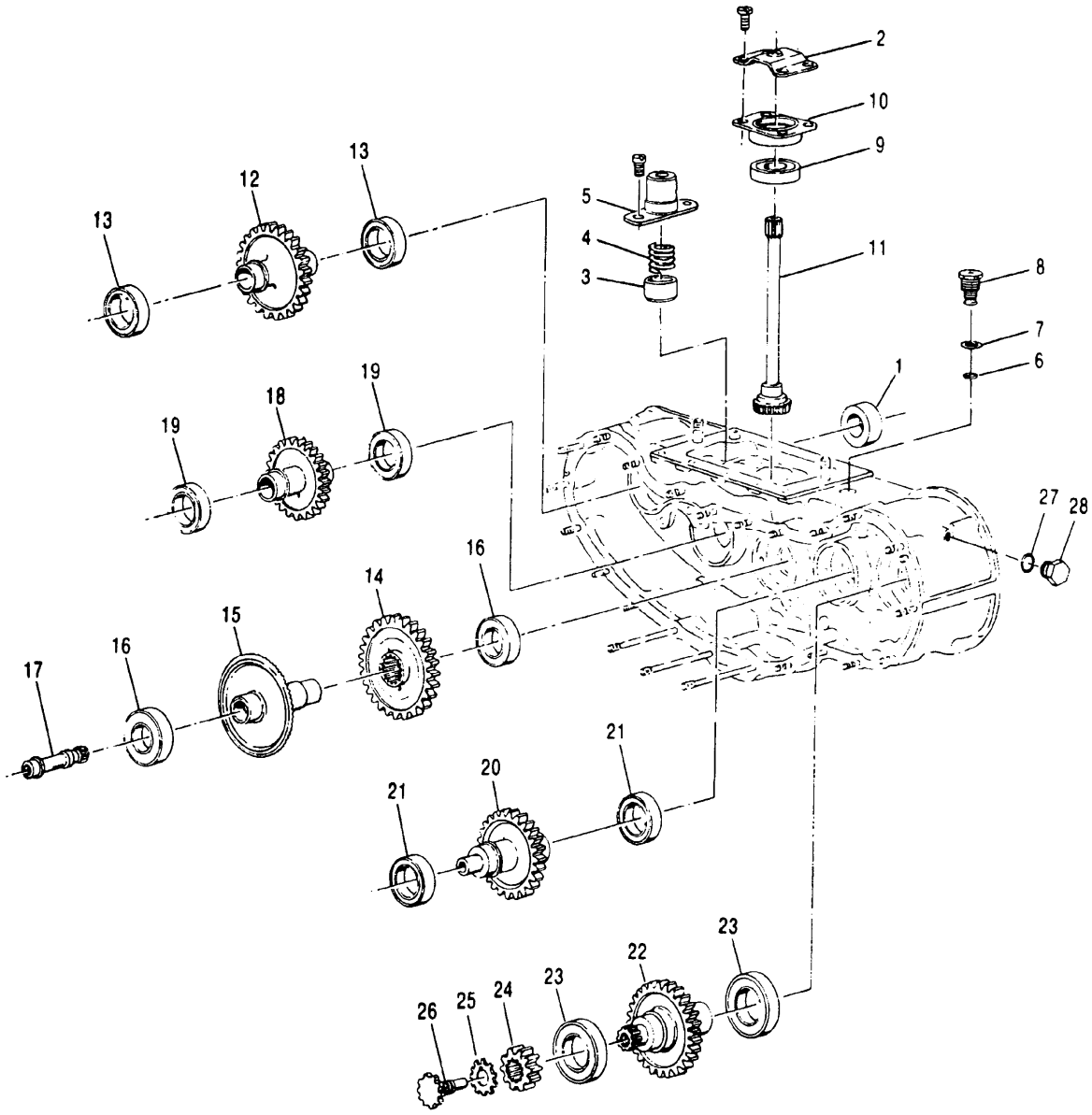

1. Side Accessory Drive and Fuel Pump Drive Shaft–gear Seal
2. Oil Baffle (PPC 47 inc.)
3. Valve
4. Spring
5. Valve Cap
6. Preformed Packing
7. Preformed Packing
8. Oil Pressure Reducing Plug
9. Bearing
10. Bearing Cage
11. Main Drive Shaftgear
12. Side Accessory Drive and Fuel Pump Drive Shaftgear
13. Bearing
14. Accessory Center Drive Gear
15. Main Drive Shaftgear
16. Bearing
17. Oil Pump Drive Shaft
18. Accessory Idler Gear
19. Bearing
20. Tachometer Drive Gear
21. Bearing
22. Accessory Drive Side Shaftgear
23. Bearing
24. Spur Gear
25. Tab Lockwasher
26. Retainer Bolt
27. Preformed Packing
28. Plug

Figure 1. Accessory Housing Gearing Details

4. **TACHOMETER DRIVE GEAR INSTALLATION.**

Support Equipment Required

Part No./Type Designation	Nomenclature
6796211	Plate, bearing installation

a. Press the bearings (21, figure 1) on front and rear of drive gear (20), using 6796211 installation plate. Refer to table 1, Ref 1, for fit limits. (QA).

b. Install the assembly in the housing. Refer to table 1, Ref 2, for fit limits. (QA).

5. **ACCESSORY CENTER DRIVE GEAR AND MAIN DRIVE SHAFTGEAR.**

Support Equipment Required

Part No./Type Designation	Nomenclature
6796211	Plate, bearing installation

a. Install the accessory center drive gear (14, figure 1) on main drive shaftgear (15).

b. Press front and rear bearings (16) on main drive shaftgear (15), using 6796211 installation plate. (Position bearing trade marks facing front.) Refer to table 1, Ref 2, for fit limits. (QA).

c. Install the assembly in housing. Refer to table 1, Ref 3, for fit limits. (QA).

d. Install oil pump drive shaft (17) in main drive shaftgear, when the oil pump is ready for installation.

6. **ACCESSORY DRIVE SIDE SHAFTGEAR INSTALLATION.**

Support Equipment Required

Part No./Type Designation	Nomenclature
6796211	Installation plate, bearing
6796593	Wrench, retainer bolt spanner
6796594	Holder
––	Wrench, Torque (0–400 lb in.)

a. Press the bearings (23, figure 1) on front and rear of side shaftgear (22), using 6796211 installation plate. Refer to table 1, Ref 1, for fit limits. (QA).

b. Assemble the spur gear (24) on the shaftgear (22) as shown in figure 1.

c. Install the tab lockwasher (25). Place the assembly in the 6796594 holder and insert retainer bolt (26). Torque bolt 300–400 lb in. using 6796593 retainer bolt spanner wrench. Secure bolt with washer tabs. (See figure 6.) (QA).

d. Install the assembly in the housing. Refer to table 1, Ref 4 and 5, for fit limits. (QA).

7. **ACCESSORY DRIVE HOUSING COVER INSTALLATION**.

Support Equipment Required

Part No./Type Designation	Nomenclature
6796354	Expander, oil seal, tachometer drive shaft gear
––	Wrench, torque (0–400 lb in.)

Materials Required

Specification No./Part No.	Nomenclature
AS3085–011	Packing, preformed
AS3085–119	Packing, preformed
MIL–PRF–23699	Oil, lubricating
MS20995C32	Lockwire
Permatex 1372 or Loctite 30588	Compound, sealing

a. Install seal plate (1, figure 7) on the cover (2).

b. Install tachometer drive spur gear seal (3) in cover. (The seal shall be flush with or below pad recessed face.)

c. Install 6796354 tachometer drive shaft gear oil seal expander (figure 8) in the opening of tachometer drive gear.

d. Install the filter bypass valve seat (4, figure 7), ball (5), spring (6), gasket (7), and body (8).

e. Install screws (9), torque to 22 to 26 lb in., and lockwire. (QA)

CAUTION

Apply the Permatex compound sparingly or the excess will enter the oil system.

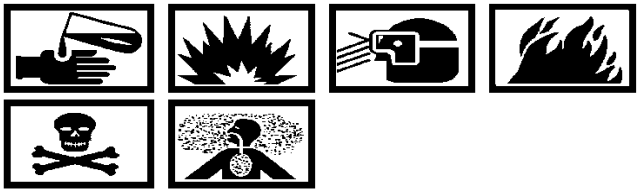

Sealing Compound Permatex No. 1372 or Loctite 30558 **34**

f. Apply Permatex 1372 or Loctite 20588 sealant at cover splitline mounting surfaces.

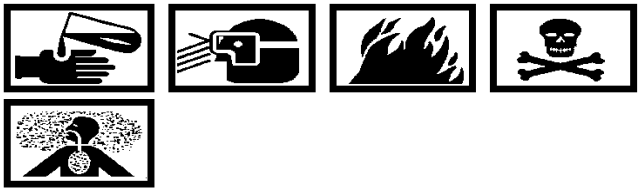

Lubricating Oil, MIL–PRF–23699 **2**

g. Lubricate the gear pockets in the cover with MIL–PRF–23699 engine oil.

NOTE

Check that all accessory gears have freedom of rotation before installing cover.

h. Install the accessory drive housing cover as follows:

(1) Place cover on accessory housing studs.

NOTE

After tightening to torque limit, wait ten minutes and retighten to limit. Repeat this wait period – retighten cycle as often as necessary until at least 95 percent of the torque limit is maintained at the last cycle check.

(2) Install gasket (10) and cover plate (12) with nuts (16). Torque to 74–89 lb in. (QA).

(3) Install brackets (13 and 14).

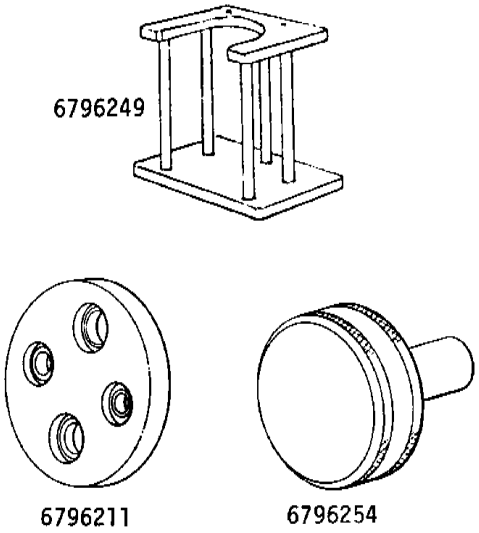

Figure 2. 6796249 Bearing Removal Support, 6796211 Bearing Instalation Plate and 6796254 Installation Plug

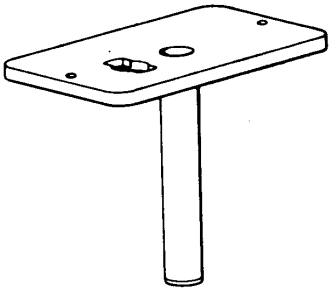

Figure 3. 6799969 Accessory Main Drive Shaft Protector

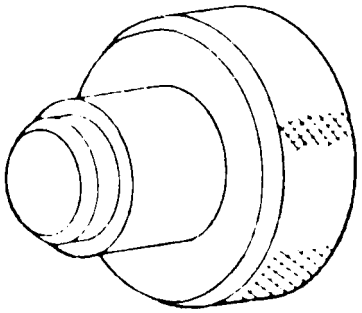

Figure 4. 6796209 Accessory Drive Shaftgear Plug

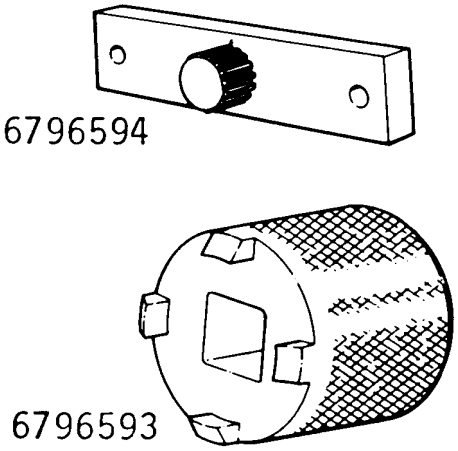

Figure 6. 6796593 Retainer Bolt Spanner Wrench and 6796594 Holder

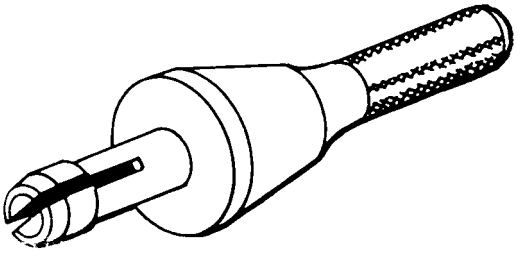

Figure 5. Expander Oil Seal Accessory Drive Shaft

(4) Remove tachometer drive shaft gear oil expander.

(5) Install washers (15) and nuts (11). Torque 70–85 lb in (QA).

(6) Install remaining nuts (16). Torque to 74–89 lb in. (QA).

i. Install preformed packing (17) and pressure line adapter (19). Torque to 200–300 lb in., and lockwire (QA).

j. Install preformed packing (21) and plug (22). Torque to 40 to 65 lb in., and lockwire (QA).

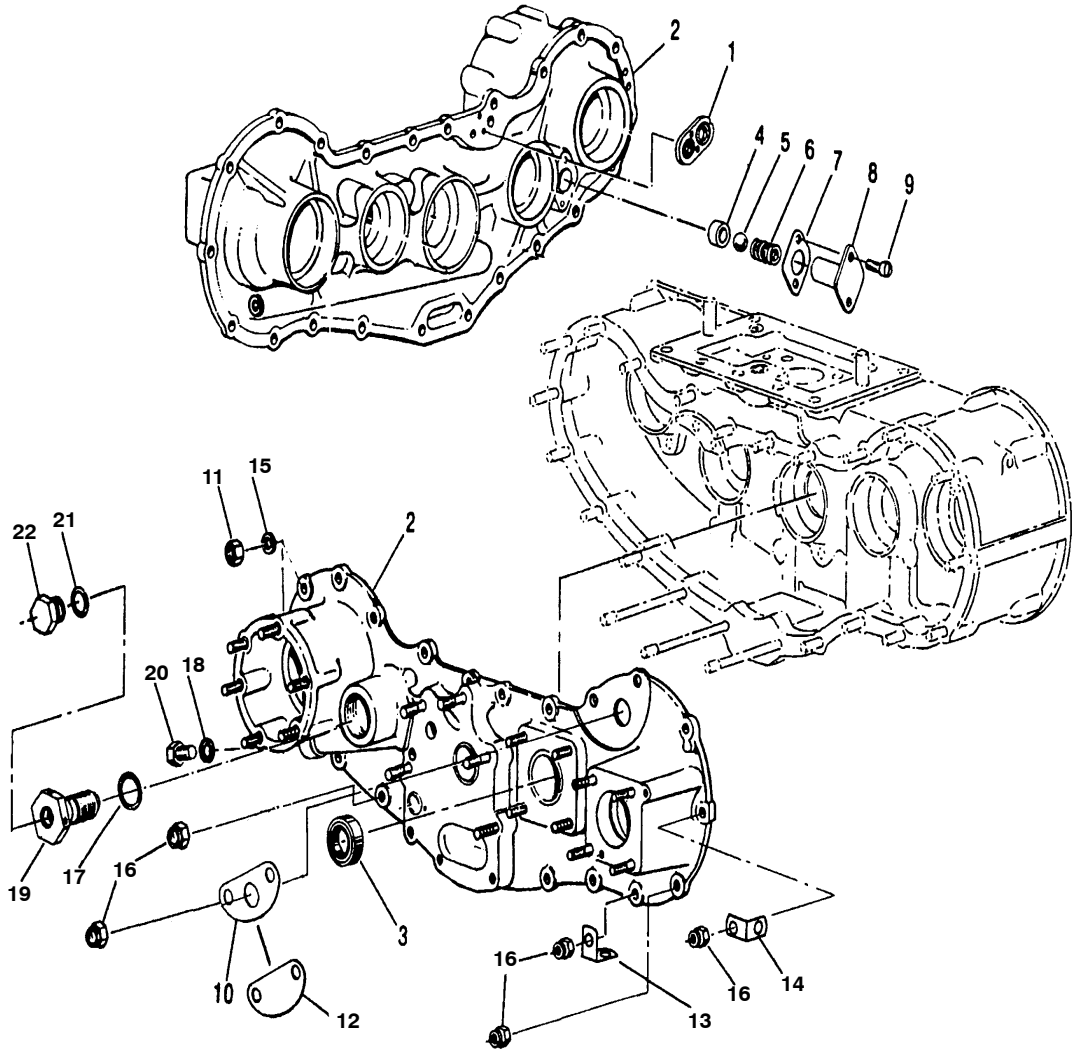

1. Seal Plate
2. Cover
3. Spur Gear Seal
4. Bypass Valve Seat
5. Ball
6. Spring
7. Gasket
8. Valve Body
9. Screw
10. Gasket
11. Nut
12. Cover Plate
13. Bracket
14. Bracket
15. Washer
16. Nut
17. Preformed Packing
18. Preformed Packing
19. Pressure Line Adapter
20. Plug
21. Preformed Packing
22. Plug

Figure 7. Accessory Drive Housing Cover Details

8. **SEALS, PLUGS, RELIEF VALVE INSTALLATION**.

9. PLUGS AND VALVE.

Support Equipment Required

Part No./Type Designation	Nomenclature
3826	Lift, accessory drive
––	Wrench, torque (0–400 lb in.)

Materials Required

Specification No./Part No.	Nomenclature
AS3085–010	Packing, preformed
AS3085–014	Packing, preformed
AS3085–118	Packing, preformed
NS165	Compound, Anti–seize
MS20995C32	Lockwire

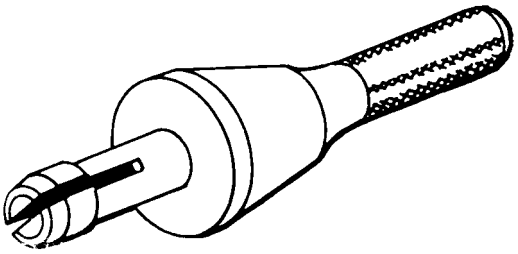

Figure 8. 6796354 Tachometer Drive Shaftgear Oil Seal Expander

Anti–seize Compound (Never Seez) NS165 32

a. Lubricate all plug hole threads with NS165.

b. Install scavenge pressure relief valve (2, figure 9), valve spring (3) and valve by–pass cap (4) with screws. Torque to 22–26 lb in., and lockwire (QA).

c. Install preformed packings (5, 6 and 18) and oil pressure reducing plug assembly (7) and plug (19) into housing. Torque to 100–150 lb in., and lockwire (QA).

d. Install preformed packing (17) and gasket seal straight thread plug (16).

e. Torque plug to 240–300 lb in. if accessories housing is to be handled in some way other than by the 3826 lifting adapter during final installation; otherwise, leave it finger tight. (Refer to WP 029 00 for installation to compressor.) (QA).

10. SEALS INSTALLATION.

Support Equipment Required

Part No./Type Designation	Nomenclature
6796354	Expander, oil seal, tachometer drive shaft gear
6796355	Expander, oil seal, accessories drive shaft

Materials Required

Specification No./Part No.	Nomenclature
MIL–PRF–23827	Grease

a. To install a typical accessory drive housing oil seal, proceed as follows: (See figure 11.)

NOTE

The seal expander shown in figure 5 is used to expand the lip type fuel pump drive shaft oil seal during installation in accessory drive housing.

(1) Insert appropriate seal expander (figure 5 or figure 8) in end of drive shaft.

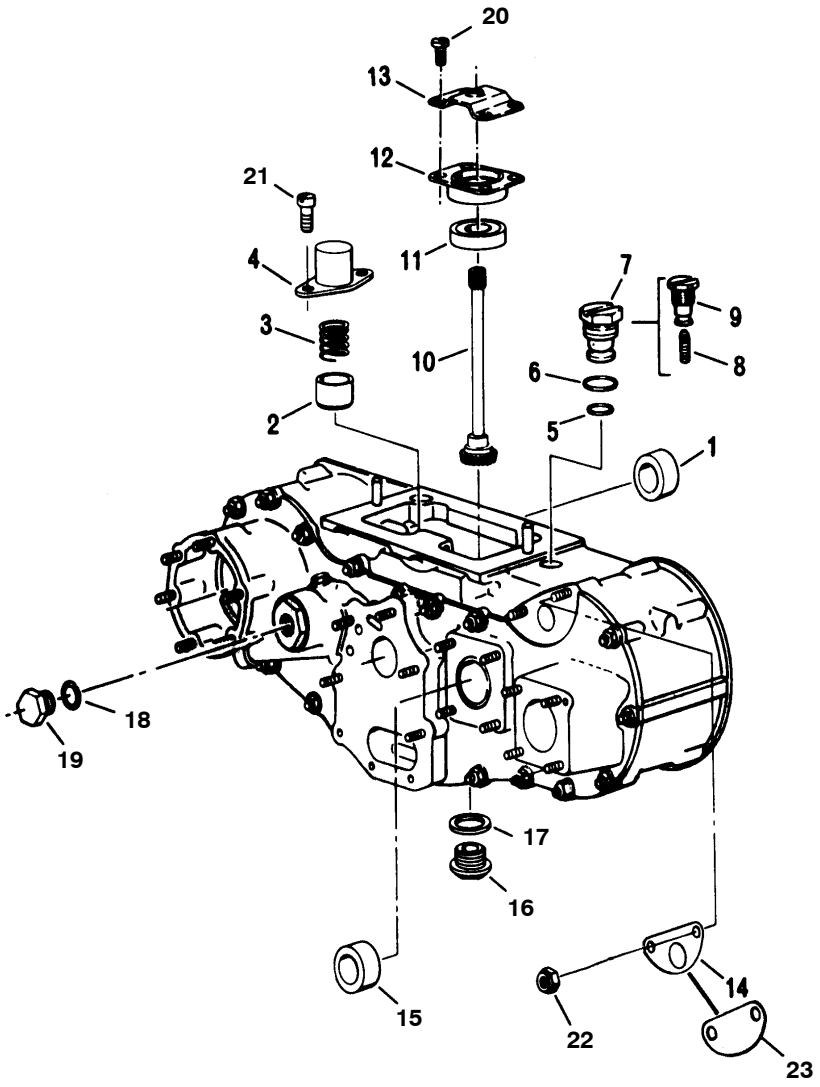

1. Plain Encased Seal
2. Scavenge Pressure Relief Valve
3. Scavenge Pressure Relief Valve Spring
4. Valve By–pass Cap
5. Preformed Packing
6. Preformed Packing
7. Oil Pressure Reducing Plug Assembly
8. Metering Plug
9. Oil Pressure Reducing Plug
10. Accessory Main Drive Shaftgear
11. Annular Ball Bearing
12. Bearing Cage
13. Oil Baffle
14. Vent Fitting Gasket
15. Plain Encased Seal
16. Gasket Seal Straight Thread Plug
17. Preformed Packing
18. Preformed Packing
19. Plug
20. Screw
21. Screw
22. Nut
23. Vent Port Cover

Figure 9. Accessories Housing

General Purpose Grease MIL–PRF–23827 18

(2) Apply a light coat of MIL–PRF–23827 grease to lip outside diameter of seal, mating shaft, and expander.

(3) Install seal over expander with lip toward inside of accessory drive housing.

(4) Carefully drive the seal into place, using a locally manufactured drift.

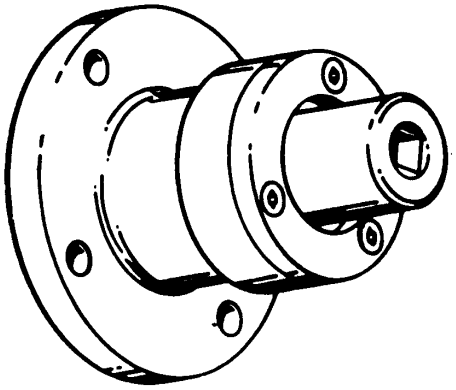

Figure 10. No. 6799596 Speed Sensitive Control Seal Installation Fixture

11. SPEED SENSITIVE CONTROL DRIVE SHAFT OIL SEAL INSTALLATION.

Support Equipment Required

Part No./Type Designation	Nomenclature
6796354	Expander, oil seal, tachometer drive shaft gear.
6799596	Fixture, installation, speed sensitive control

Materials Required

Specification No./Part No.	Nomenclature
MIL–G–23827	Grease

NOTE

The seal expander shown in figure 8 is used with speed sensitive control seal installation fixture (figure 10) to install the speed sensitive control drive shaft oil seal.

a. Insert 6796354 seal expander (figure 8) in end of drive shaft. (See figure 11.)

General Purpose Grease MIL–PRF–23827 18

b. Apply a light coat of MIL–PRF–23827 grease to lip outside diameter of seal, mating shaft,and expander.

c. Install seal over expander, with lip toward inside of accessory drive housing. (See figure 11.)

d. Back out the driver of 6799596 installation fixture (figure 10); then secure the fixture to the speed sensitive control mounting pad with four nuts.

e. Turn driver of fixture in until seal is pressed in place.

f. Remove fixture and expander.

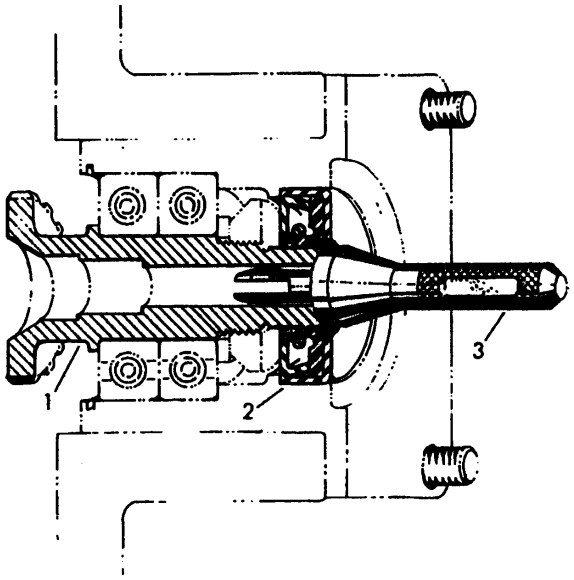

1. Shaft 2. Seal 3. Seal Expander

Figure 11. Typical Accessory Drive Shaft Oil Seal Installation

INTERMEDIATE MAINTENANCE

INSPECTION AND REPAIR

COMPRESSOR BLADES AND VANES

Reference Material

Inspection and Non–Destructive Testing (NDT) Standard Practices . . . . . WP 014 00
Accessory Drive Housing Assembly–Removal and Installation . . . . . WP 029 00
Compressor Assembly–Disassembly . . . . . WP 047 00
Compressor Assembly–Cleaning, Inspection, and Repair . . . . . WP 048 00
Compressor Assembly–Assembly . . . . . WP 049 00
External Tubing, Cabling and Clamping Supplement Manual . . . . . NAVAIR 02B–5DG–6–1–1

Alphabetical Index

Subject Page No.
Compressor Blade and Vane Inspection Procedures 2
Compressor Disassembly and Assembly 2
Compressor Fourteenth Stage Vane Assembly Inspection and Rework 5
Compressor Rotor Blade Inspection and Rework 2
Compressor Vane Assembly Inspection and Rework 4

Record of Applicable Technical Directives

None

1. **COMPRESSOR BLADE AND VANE INSPECTION PROCEDURES**.

NOTE

Cleaning and corrosion inhibiting are covered in WP 048 00.

a. The inspection procedures of this work package are based on the premise that foreign object damage has possibly occurred inside the compressor.

NOTE

If, during inspection, the amount of debris or strike damage indicates that excessive blockage may have occurred, then this should be logged and the compressor forwarded to overhaul.

b. It is assumed that the object did not block or partially block the compressor air inlet housing which could result in a frequency excitation of the second–stage compressor blades. Such an excitation is harmful to blade material if the engine was operated for more than five minutes under those conditions.

c. If the log book records indicate that excessive blockage occurred, then this work package is not applicable. Refer to WP 047 00 for disassembly.

d. It is not possible to describe fully all the damage conditions that might occur.

NOTE

Compressor cases are machined in matched sets. One case damaged beyond repair is cause for rejection of the opposite case. A new compressor rotor is not required when replacement of the case assembly is necessary. However, if the rotor is damaged and rejected, replace the compressor rotor and case assembly.

e. If there is reasonable doubt as to the serviceable condition of a component, vane, blade, or case, reject it.

2. **COMPRESSOR DISASSEMBLY AND ASSEMBLY**.

a. Refer to WP 029 00 for removal and installation of the accessory drive housing.

b. Refer to NAVAIR 02B–5DG–6–1–1 for removal and installation of external equipment on compressor.

c. Refer to WP 047 00 for disassembly of compressor unit.

d. Although all blades can be checked by removing one half of the compressor, only half of the vanes can be checked. Therefore, it is necessary to reinstall the removed half and then take off the other half.

e. Refer to WP 049 00 for compressor reassembly.

3. **COMPRESSOR ROTOR BLADE INSPECTION AND REWORK**.

Support Equipment Required

Part No./Type Designation	Nomenclature
23033011	Template, blade rework
ZA–43	Kit, inspection, fluorescent dye penetrant

a. Replace compressor rotor and case assembly when blade damage exceeds any of the following limits.

b. Blade measurements necessary in determining rework limits are made with 23033011 blade rework templates (figure 1).

c. The following limits must be met after rework.

(1) Nicks and dents in leading and trailing edges in upper 2/3 of blade airfoil are to be reworked by filing or grinding and then final polishing to form a smooth blend with the basic airfoil contour. The following requirements must also be met:

(a) After rework, the blade chord at the area of rework must be within limits of figure 2.

(b) Removal of material to eliminate the damage should be held to a minimum.

(c) The final polishing on reworked area must be in a longitudinal direction on blade airfoil.

(d) No sharp edges, burrs, cracks, or tears in the surface are allowable after rework.

(2) Rework all minor nicks, scratches, or abrasions in the leading and trailing edges which can be entirely removed by light polishing only.

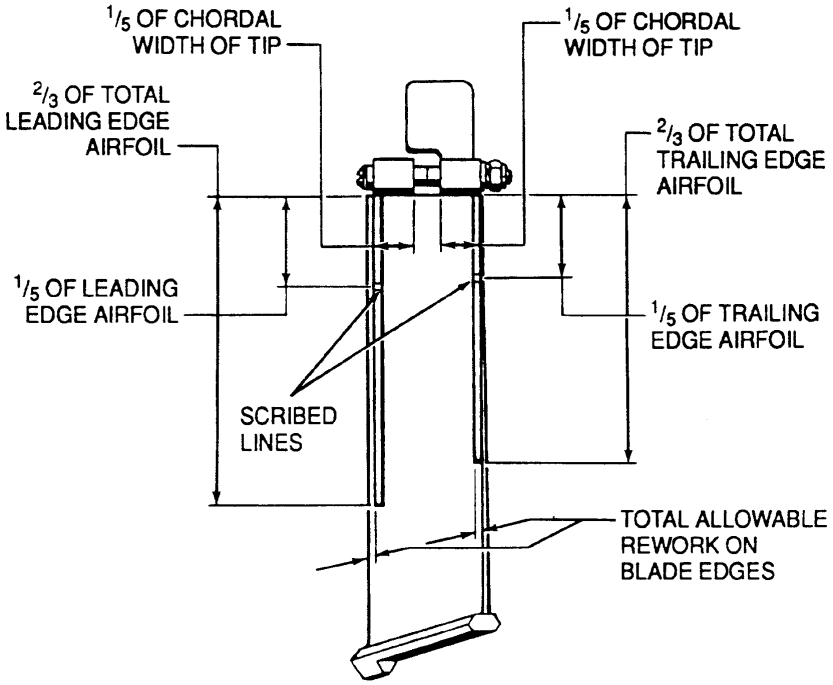

Figure 1. 23033011 Compressor Blade Template Rework Limits

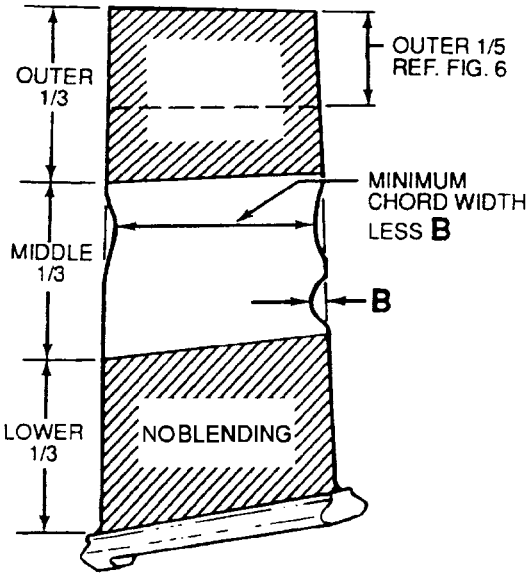

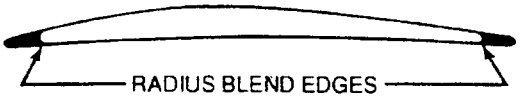

MAX **B** DEPTH

STAGES	OUTER 1/3	MIDDLE 1/3
1 AND 2	0.120 INCH	0.100 INCH
3 AND 4	0.090 INCH	0.070 INCH
5 THRU 7	0.070 INCH	0.050 INCH
8 THRU 14	0.050 INCH	0.035 INCH

Figure 2. Compressor Blade Leading and Trailing Edge Damage Limits

Note

Measure small defects (dents, pits and nicks) by making a comparison check of the damage with an object of known size (such as lockwire).

(3) No rework allowed in lower 1/3 of blade airfoil. Allowable damage is identified in figures 3, 5 and 6. Dents and pits in lower 1/3 of blade must have well–rounded bottoms. No “V” shaped notches or nicks allowed. No trailing edge damage allowed in lower 1/3.

(4) Straighten to remove dents in the upper 1/3 of the airfoil only, provided the damage does not exceed the limits of figure 3. (the tools used to straighten the blade must be smooth surfaced to avoid additional damage to the blade surface).

(5) Rework the reformed area if required.

(6) Rework must conform to preceding step c. (1).

(7) Blade tip damage can be reformed by straightening or can be reworked within limits of figure 4.

(8) Blades with minor surface damage in the upper 2/3 of the airfoil, other than in the leading and trailing edge areas, can be reworked within limits of figure 5.

(9) Rework shall consist of nothing more than blending out the sharp edges.

(10) See figure 6 for compressor blade corrosion limits.

Fluorescent Dye Penetrant ZA–43 **17**

(11) Fluorescent dye penetrant inspect (FPI) all reworked blades for cracks in accordance with standard practices (WP 014 00).

d. Inspect the rotor interstage seal surfaces for grooves due to contact with the vane seal lips. A groove, up to 0.005 in. deep, is acceptable after removal of sharp or rough edges.

Fluorescent Dye Penetrant ZA–43 **17**

e. FPI blades in accordance with standard practices. Refer to WP 014 00.

4. **COMPRESSOR VANE ASSEMBLY INSPECTION AND REWORK**.

Support Equipment Required

Part No./Type Designation	Nomenclature
ZA–43	Kit, inspection, fluorescent dye penetrant

a. Inspect the compressor vane assembly for damage. Replace case assembly when any of the following conditions exist after rework:

(1) Any cracks in vane assembly.

(2) Loose vane assembly.

(3) Folded or rolled back airfoil edges.

(4) Debonded or missing inner band seal lining in excess of 0.750 in.

b. Vane damage is repaired by straightening and blending as follows:

(1) Straighten leading and trailing edge dents. No straightening is permitted in the braze fillet area (figure 8, area A). Remove nicks and tears in the edges by filing and final polishing in a longitudinal direction. Blend smoothly to the original contour with minimum material removal.

(2) Blend vane surface dents and nicks to remove raised metal and sharp edges (figure 7). Final polishing must be in a longitudinal direction on vane airfoil. Blend smoothly to the original contour with minimum material removal.

Fluorescent Dye Penetrant ZA–43 17

c. Fluorescent dye penetrant inspect all reworked vanes in accordance with standard practices (WP 014 00).

d. Inspect the compressor vane assembly for corrosion figure 9. Replace if corrosion exceeds limits identified in figure 9.

5. **COMPRESSOR FOURTEENTH STAGE VANE ASSEMBLY INSPECTION AND REWORK**.

Support Equipment Required

Part No./Type Designation	Nomenclature
ZA–43	Kit, inspection, fluorescent dye penetrant

a. Inspect the vane assembly for damage. Replace the assembly when any of the following conditions exist after rework:

(1) Any crack indications on the airfoil.

(2) Inner or outer ring cracks.

(3) Any corrosion pitting in excess of blending limits.

b. Rework vane assembly as follows:

(1) Straighten dents, bends and damage in vane edges by reforming vane to its original shape.

(2) Remove nicks and tears in the edges by filing and final polishing in a longitudinal direction. Blend smoothly to the original contour with minimum material removal. Blending depth must not exceed 0.100 in. figure 8.

Fluorescent Dye Penetrant ZA–43 17

(3) Fluorescent dye penetrant inspect all reworked vanes in accordance with standard practices. Refer to WP 014 00.

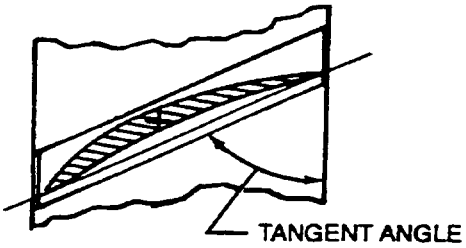

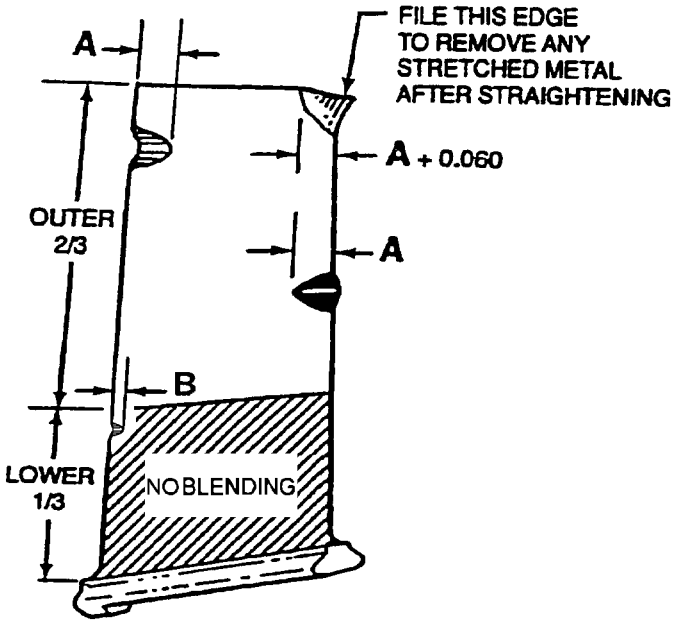

OUTER 2/3

STAGES	MAX A DEPTH
1 THRU 3	0.250 INCH
4 THRU 7	0.190 INCH
8 THRU 14	0.120 INCH

LOWER 1/3 (LEADING EDGE)

STAGES	MAX B DEPTH
1 THRU 14	0.025 INCH

CAUTION

NO DAMAGE ALLOWED IN TRAILING EDGE OF THE LOWER 1/3 OF THE AIRFOIL.

NO DAMAGE ALLOWED IN FILLET RADIUS.

NO TEARS ALLOWED

NO "V" SHAPED NOTCHES ALLOWED IN LEADING EDGE OF THE LOWER 1/3.

Figure 3. Compressor Rotor Blade Dent Damage Limits

STAGE	1/5 CHORD
1	0.31 INCH
2	0.28 INCH
3	0.23 INCH
4	0.20 INCH
5	0.17 INCH
6	0.15 INCH
7	0.14 INCH
8–14	0.12 INCH

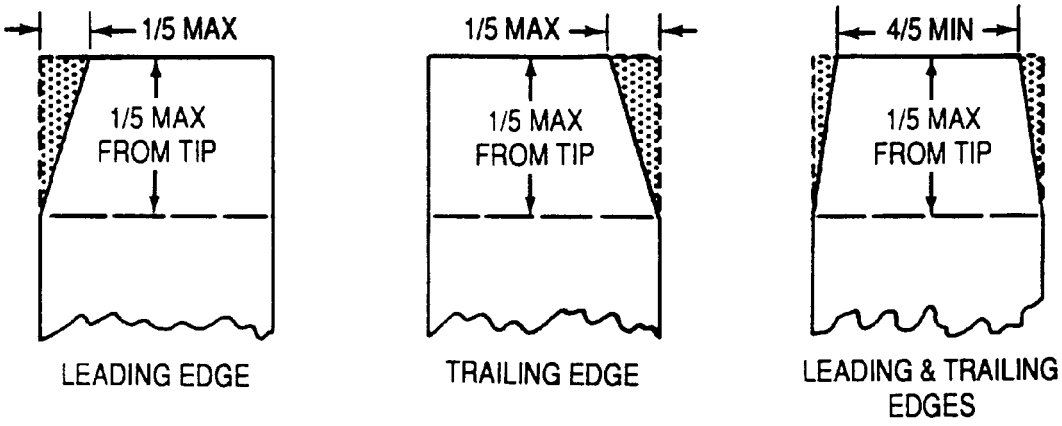

Figure 4. Compressor Blade Tip Blending Limits

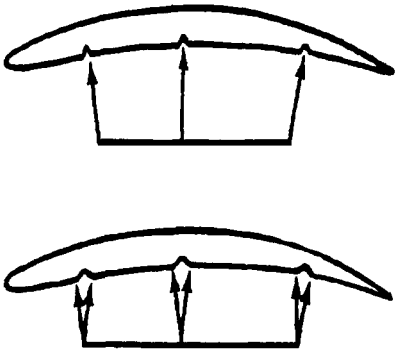

BLEND EDGES

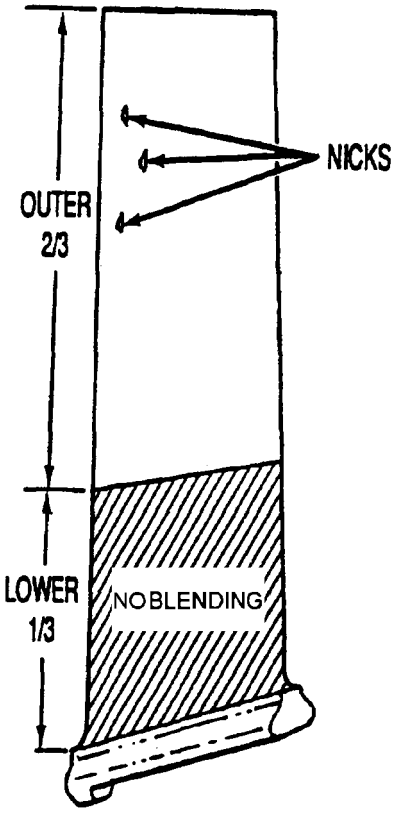

OUTER 2/3

STAGES	MAX DIAMETER
1	0.030 INCH
2 THRU 5	0.020 INCH
6 THRU 14	0.010 INCH

LOWER 1/3 (EXCEPT TRAILING EDGE)

STAGES	MAX DIAMETER
1	0.020 INCH
2 THRU 5	0.015 INCH
6 THRU 14	0.010 INCH

CAUTION

NO DAMAGE ALLOWED IN FILLET RADIUS (SHOWN IN FIGURE 3).

NO SHARP NICKS ALLOWED IN THE LOWER 1/3 OF THE AIRFOIL SURFACE.

NO DAMAGE ALLOWED WITHIN 0.050 INCH OF THE LOWER 1/3 TRAILING EDGE.

Figure 5. Compressor Blade Surface Damage Limits

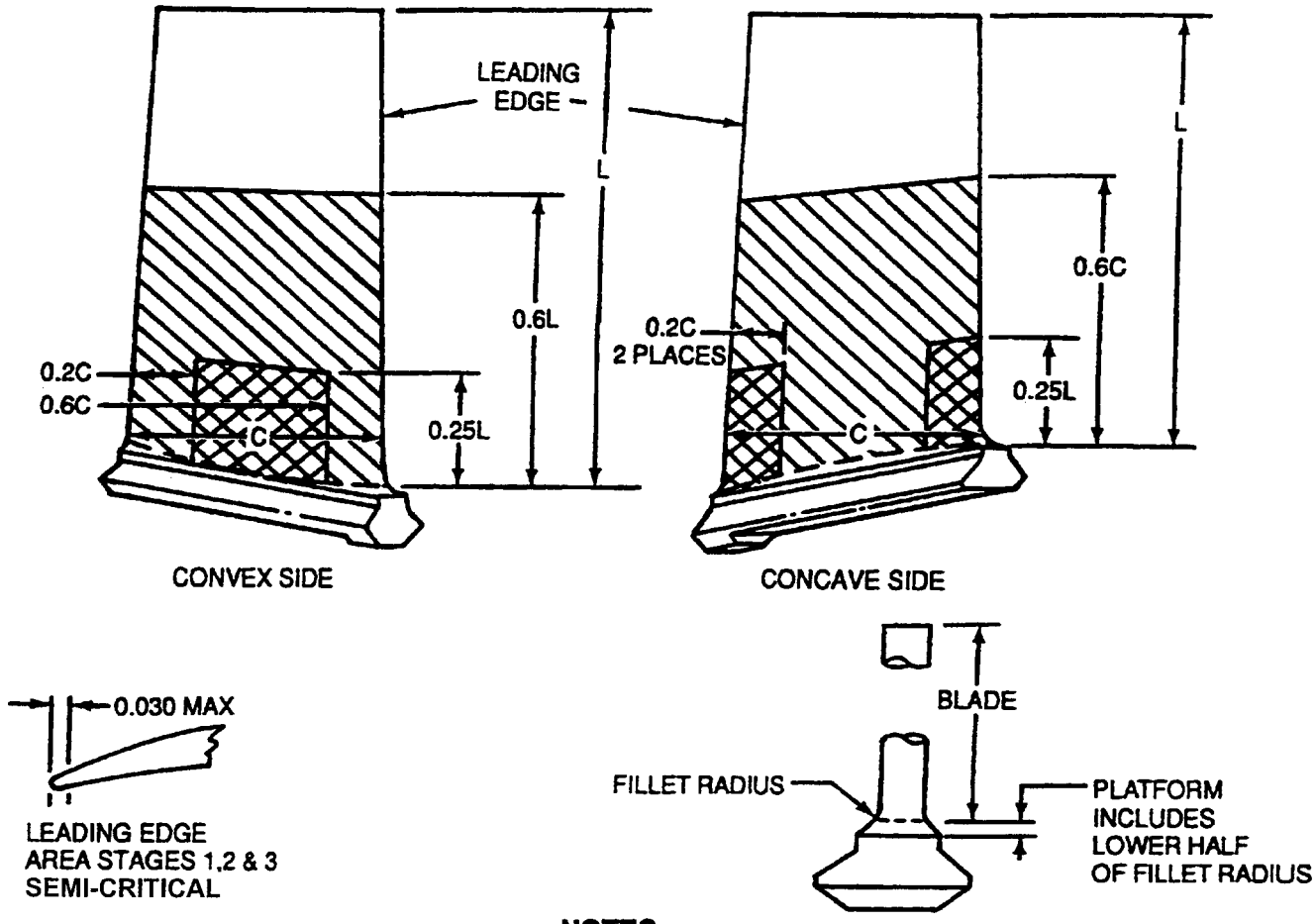

NOTES

Polish airfoil surfaces on blades showing corrosion stain prior to inspection for pitting.
A pit is any dark spot which will not polish away with 320 or finer emery cloth.

TYPICAL ALL STAGES

CRITICAL AREA:
No corrosion pitting acceptable, except in leading edge area. Scattered corrosion pits less than 0.010 inch diameter are acceptable in leading edge area provided the pits are not clustered, do not interconnect, or form a line type pattern.

SEMI-CRITICAL:
Scattered corrosion pits less than 0.010 inch diameter are acceptable provided the pits are not clustered, do not interconnect, or form a line type pattern.

NON-CRITICAL:
Scattered corrosion pits, less than 0.030 inch diameter, are acceptable provided the pits do not interconnect or form a line type pattern. Clustered pits in individual pits do not exceed 0.015 inch in diameter.

C = CHORDAL WIDTH 0.150 ABOVE PLATFORM
L = LENGTH OF BLADE

Figure 6. Compressor Blade Corrosion Limits

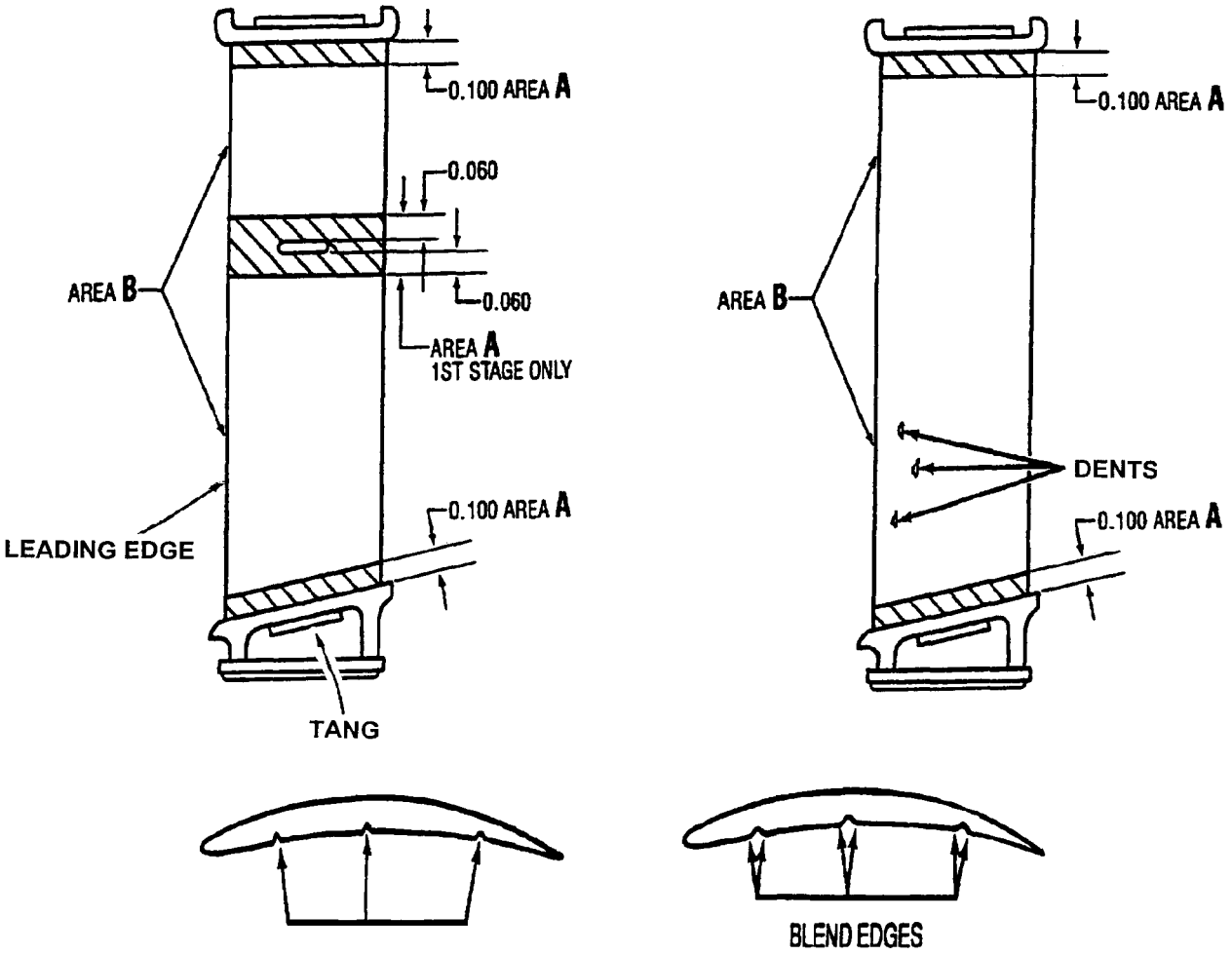

NOTES

Airfoil surface dents can cause waves or bumps on opposite side of the airfoil.
On vane stages 6 thru 14 only, the entire vane is considered Area B.
On vane stages 4 and 5 only, Area A applies to inner band only.

AREA A (Surface Damage, Stages 1 thru 5)

Max diameter of airfoil surface dents is 0.030 inch provided damage is not within 0.030 inch of the vane tang. Nicks and dents on tie bars of first stage are acceptable providing there are no sharp edges.

AREA B (Surface Damage, All Stages)

Max diameter of airfoil surface dents is 0.060 inch provided bump on opposite side of the airfoil is rounded and has no sharp edges.

Figure 7. Compressor Vane Damage Limits All Stages

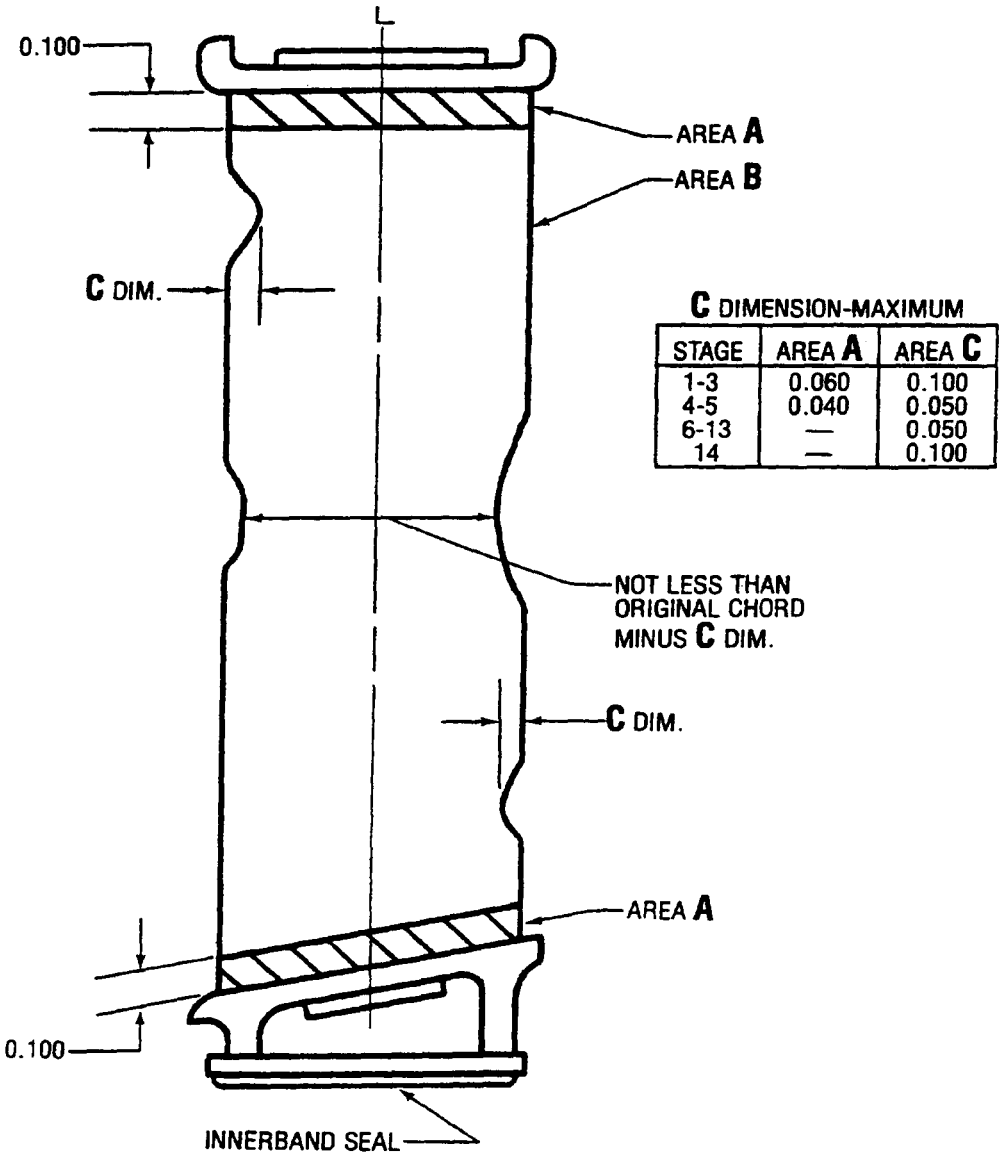

C DIMENSION-MAXIMUM

STAGE	AREA A	AREA C
1-3	0.060	0.100
4-5	0.040	0.050
6-13	—	0.050
14	—	0.100

Figure 8. Compressor Vane Inspection Limits

NOTE

Polish airfoil surfaces on vanes showing corrosion stain prior to inspecting for pitting. A pit is any dark spot which will not polish away with 320 grit or finer emery cloth.

Area A (Including tie bar – first stage)
Pits to 0.010 in. diameter are acceptable if widely scattered with no pits interconnected, clustered, or forming a linear pattern.

Area B
Pits to 0.020 in. diameter are acceptable if they do not interconnect or form a linear pattern. Small clustered pits up 0.015 in. diameter are acceptable provided they are not within 0.100 in. of the leading or trailing edges.

NOTE

Pit depth is not measurable due to irregular bottom definition. If there is any evidence that pits are deeper than the allowable maximum diameter specified, the vane shall be rejected.

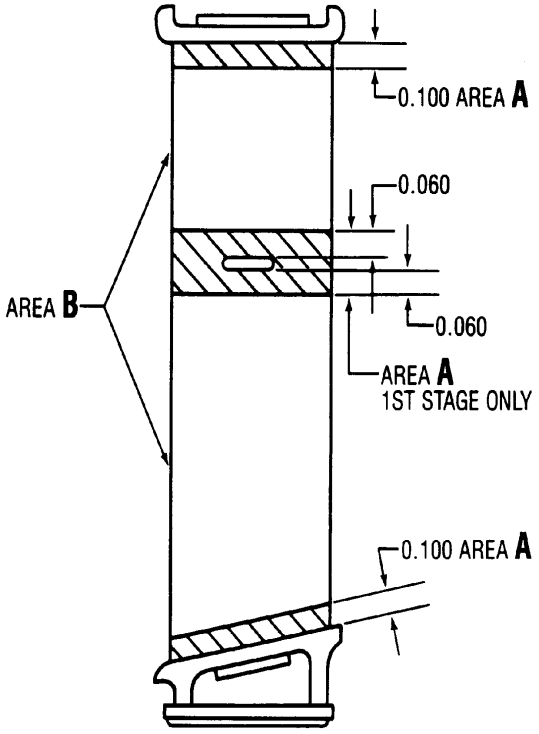

Figure 9. Compressor Vane Corrosion Limits

INTERMEDIATE MAINTENANCE

MAINTENANCE

COMPRESSOR DIFFUSER, REAR BEARING AND SEAL

Reference Material

External Tubing, Cabling & Clamping Supplement Manual . . . . . NAVAIR 02B–5DG–6–1–1
Compressor Assembly – Disassembly . . . . . WP 047 00
Compressor Assembly – Assembly . . . . . WP 049 00
Bleed Air Valve – Maintenance . . . . . WP 089 00

Alphabetical Index

Subject Page No.
Compressor Rear Bearing Labyrinth Seal Cleaning 10
Inspection and Repair 3
Compressor Rear Bearing and Seals 3
Compressor Rear Bearing Locking Key 3
Compressor Rear Bearing Oil Jet 4
Compressor Shaft Coupling 4
Diffuser Assembly 3
Installation 7
Removal 2

Record of Applicable Technical Directives

None

1. **REMOVAL.**

Support Equipment Required

Part No./Type Designation	Nomenclature
3855	Wrench, compressor rear bearing nut
6795905	Stand, turnover, engine component
6796262	Support, compressor rear bearing nut wrench
6796847	Adapter, stand to compressor unit attaching
6796965	Adapter, compressor unit to maintenance stand attaching
6797691	Adapter, compressor lifting
6797708	Puller, compressor rear bearing and double labyrinth seal

a. Disconnect cables and lines from bleed air collectors and spray shield. (Refer to NAVAIR 02B–5DG–6–1–1.)

b. Remove compressor seal vent tube assemblies from bleed air collectors.

c. Remove bleed air valves from bleed air collectors. (Refer to WP 089 00.)

d. Remove bolts, washers, and bushings from bleed air collector flange and remove spray shield assembly. (Note size and locations of bolts, washers and bushing when removing.)

e. Loosen coupling clamps and remove bleed air collectors.

f. Disconnect fuel manifold from fuel nozzles.

g. Remove compressor extension shaft and side gear. Refer to WP 047 00.

h. Install 6796965 compressor unit to maintenance stand attaching adapter (figure 1) and 6796847 stand to compressor unit attaching adapter (figure 2) to the 6795905 engine component turnover stand (figure 3). The parallel rail stand may be used.

i. Using 6797691 (figure 4) compressor lifting adapter with a hoist, install compressor assembly to component stand adapter.

CAUTION

Do not allow rotor to slip down when compressor assembly is rotated from horizontal position.

NOTE

The jack which fits against the compressor tie bolt, is on 6796965 adapter.

j. Adjust jack against rotor and lock it.

k. Turn compressor vertically with diffuser up.

l. Using pliers, reach into turbine shaft to compressor coupling (6, figure 7) and compress coupling retaining ring (7) and pull out coupling shaft. (The internal retaining ring (5) (oil dam) remains in coupling. The coupling retaining ring remains on fourteenth–stage wheel shaft.)

m. Remove bolts (3 and 4), bearing oil nozzle (2), and metal O–ring gasket (1). Discard gasket.

n. Remove bolts (8), oil tube adapter (10) and gasket (11) from diffuser (12). Discard gasket.

o. Install 3855 compressor rear bearing nut wrench (figure 5) and 6796262 compressor rear bearing nut wrench support (figure 6) in diffuser. Remove rear bearing nut (20, figure 5) which has a right–hand thread.

p. Remove brackets (1, 4, 7 and 14, figure 8) and plate (11) from diffuser assembly.

CAUTION

The 14th stage compressor and outlet vane assembly (26, figure 7) can fall out as the diffuser is lifted. Be careful that it doesn't get damaged.

q. Remove remaining splitline bolts and nuts between diffuser and compressor assembly. Remove diffuser assembly.

r. Remove the fourteenth stage compressor and outlet vane assembly (26) from diffuser.

s. Install the 6797708 compressor rear bearing and double labyrinth seal puller (figure 9) over the bearing and labyrinth seals.

t. Remove bearing (17, figure 7), lock key (18), metallic O–ring gasket (19), bearing flange seal (20), secondary and primary labyrinth stator seals (22 and 24) and secondary and primary labyrinth rotating seals (21 and 23).

u. Remove seal ring (25) from the OD of primary labyrinth stator seal (24). (This seal ring is spring loaded at the seal gap.)

v. Remove the fourteenth stage compressor and outlet vane assembly (26) from the diffuser.

w. Remove bolts (14), cover (15) and metallic O–ring seal (16).

2. **INSPECTION AND REPAIR.**

3. DIFFUSER ASSEMBLY.

a. Replace diffuser if following limits are exceeded:

(1) Cracks which exceed 0.625 in. in length in the radial strut weld seam at outer rim of diffuser.

(2) Weld seam cracks of less than 0.625 in. are acceptable.

(3) Cracks extending from the outer end attaching weld seam into a radial strut.

b. Smooth up any minor damage to machine surfaces to remove burrs, roughness, or scratches.

c. Check and ensure that diffuser sump area is clean and free of all carbon deposits.

4. COMPRESSOR REAR BEARING AND SEALS.

a. A combination wear of 0.002 in. is acceptable on the face of outer ring of bearing and mating surface of secondary labyrinth seal.

b. Inspect primary and secondary labyrinth seals for wear.

c. Replace seals if wear is evident.

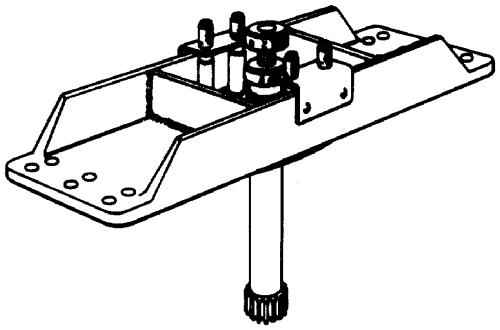

Figure 1. No. 6796965 Compressor Unit to Maintenance Stand Attaching Adapter

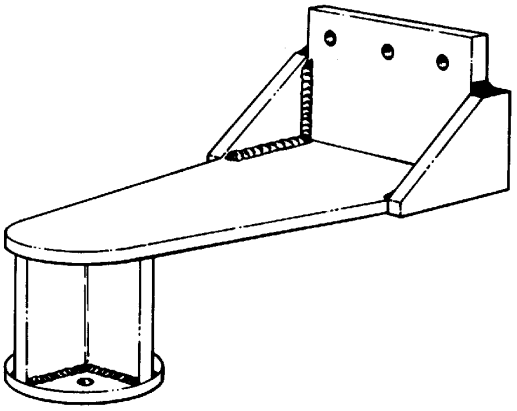

Figure 2. No. 6796847 Stand to Compressor Attaching Adapter (2)

d. Damaged labyrinth seal lips shall be blended to remove sharp edges.

e. If inside diameter of compressor rear bearing inner ring exceeds 2.3616 in., replace the bearing.

f. If bearing locking key slot is damaged, replace the bearing.

5. COMPRESSOR REAR BEARING LOCKING KEY.

a. A fretted or worn key shall be replaced.

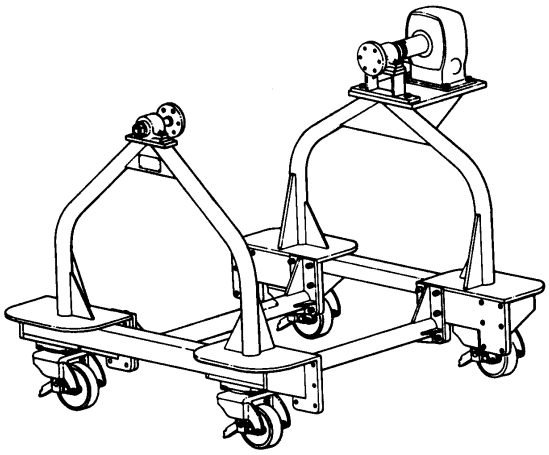

Figure 3. 6795905 Engine Component Turnover Stand

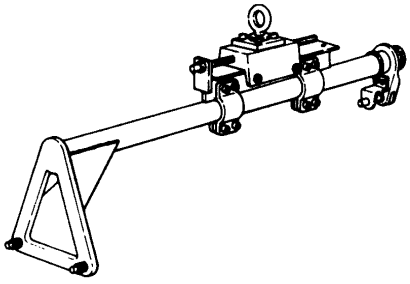

Figure 4. 6797691 Compressor Lifting Adapter

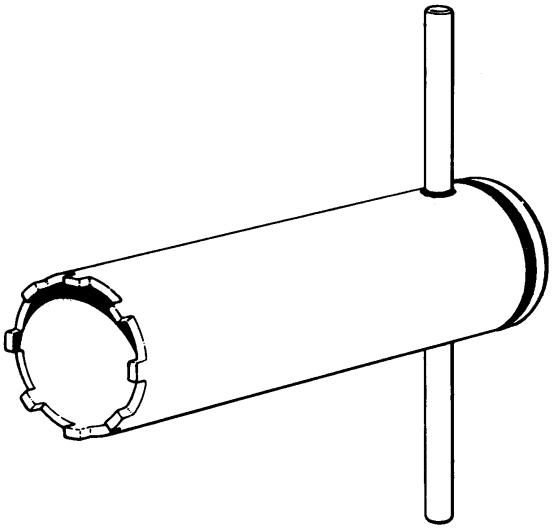

Figure 5. 3855 Compressor Rear Bearing Nut Wrench

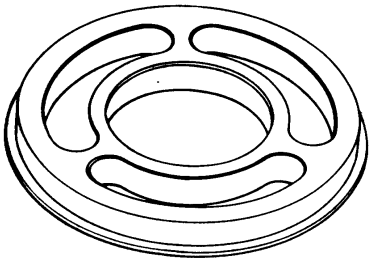

Figure 6. 6796262 Compressor Rear Bearing Nut Wrench Support

6. COMPRESSOR SHAFT COUPLING.

Support Equipment Required

Part No./Type Designation	Nomenclature
53713	Stone, Arkansas

a. Replace the coupling if any of the following conditions are found:

(1) Abnormal spline wear.

(2) Crack indications extending into root corners or breaking edges of spline teeth.

(3) Spalling on spline teeth.

(4) Scuffing on spline teeth, if metal pickup or pileup cannot be removed by light stoning (Arkansas stone).

7. COMPRESSOR REAR BEARING OIL JET.

a. An oil jet with ID exceeding 0.081 in. shall be rejected.

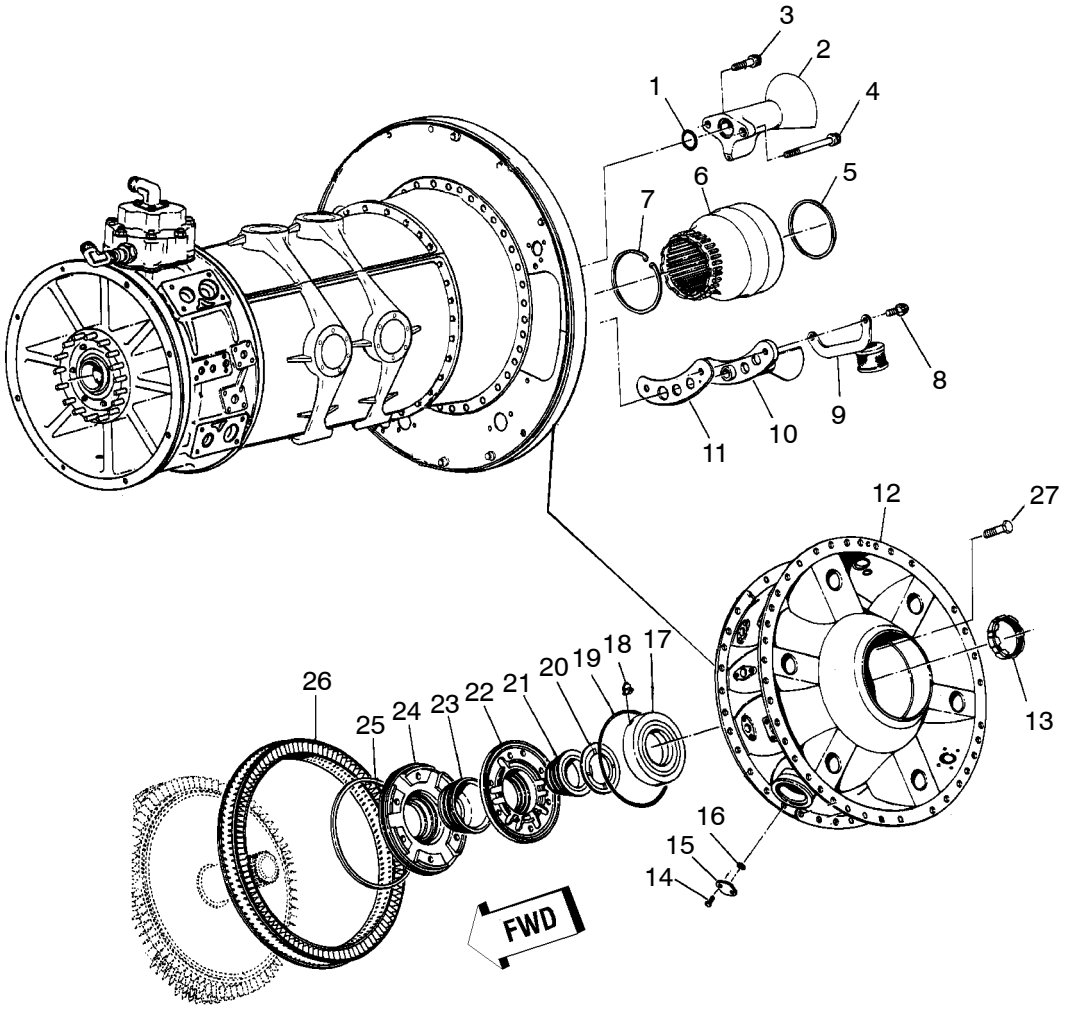

1. Gasket Metal O–ring
2. Nozzle, Bearing Oil
3. Bolt
4. Bolt
5. Retaining Ring, Internal
6. Coupling, Turbine Shaft to Compressor
7. Retaining Ring, Coupling
8. Bolt
9. Screen, Diffuser Oil Sump
10. Adapter, Oil Tube
11. Gasket
12. Diffuser
13. Nut, Rear Bearing
14. Bolt
15. Cover
16. Seal, Metallic O–ring
17. Bearing
18. Key, Bearing Locking
19. Gasket, Metallic O–ring
20. Seal, Bearing Flange
21. Seal, Secondary, Labyrinth Rotating
22. Seal, Secondary, Labyrinth Stator
23. Seal, Primary, Labyrinth Rotating
24. Seal, Primary, Labyrinth Stator
25. Ring, Seal
26. Vane Assembly, 14th Stage Compressor and Outlet
27. Bolt

Figure 7. Diffuser Details

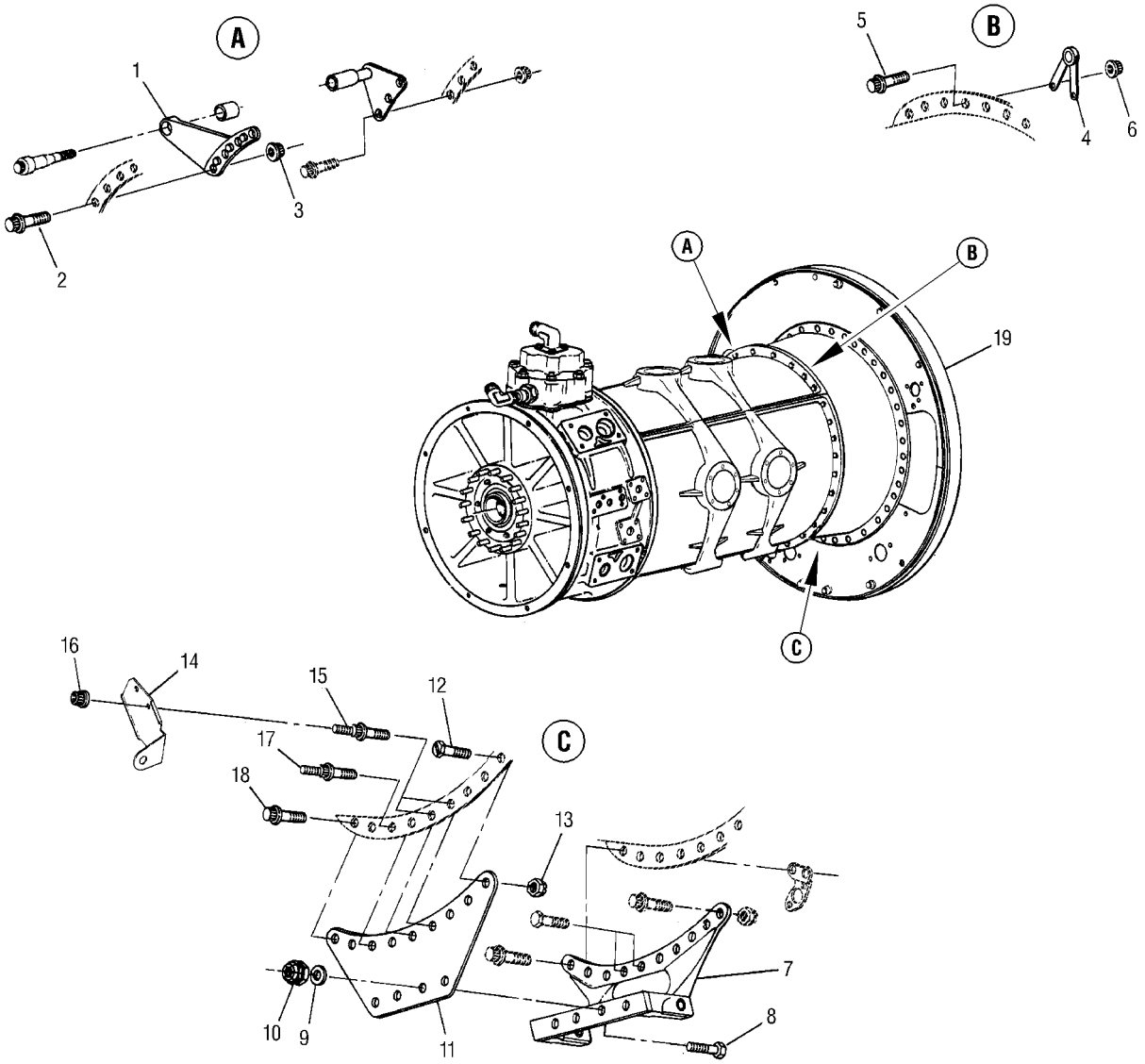

1. Bracket, Engine Side Mount Forward
2. Bolt
3. Nut
4. Bracket, Engine Lifting
5. Bolt
6. Nut
7. Bracket Assembly Rear Engine Mount
8. Bolt
9. Washer
10. Nut
11. Plate, Rear Engine Mounting
12. Bolt
13. Nut
14. Bracket, Pressure Switch Support
15. Bolt, Stud
16. Nut
17. Bolt, Stud
18. Bolt

Figure 8. Diffuser Bracket Details

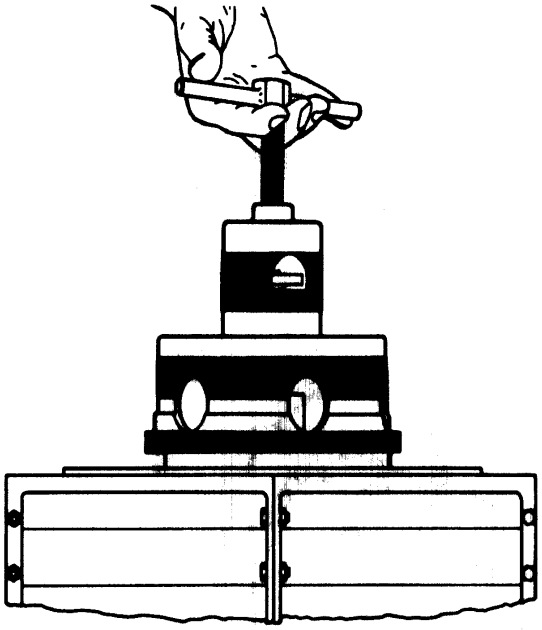

Figure 9. Removing Compressor Rear Bearing Outer Ring and Seal Using 6797708 Puller

8. **INSTALLATION.**

Support Equipment Required

Part No./Type Designation	Nomenclature
3855	Wrench, compressor rear bearing nut
6795905	Stand, turnover, engine component
6796169	Pin, guide
6796190	Driver, compressor rear bearing and seal
6796262	Support, compressor rear bearing nut wrench
6796847	Adapter, stand to compressor unit attaching
6796965	Adapter, compressor unit to maintenance stand attaching
6797691	Adapter, compressor lifting
---	Wrench, torque (0–100 lb in.)
---	Wrench, torque (0–200 lb in.)
---	Wrench, torque (0–300 lb ft.)

Materials Required

Specification No./Part No.	Nomenclature
SAE–AMS–M–7866	Molybdenum disulfide, lubricating, technical
MS20995C32	Lockwire
MS9202–015	Gasket, metal O–ring
MS9205–072	Gasket, metal O–ring
NS165	Compound, Anti–seize
6784419–4	Seal, metal O–ring

a. Install 6796965 compressor unit to maintenance stand attaching adapter (figure 1) and 6796847 stand to compressor unit attaching adapter (figure 2) to the 6795905 engine component turnover stand (figure 3).

b. Using 6797691 (figure 4) compressor lifting adapter with a hoist, install compressor (with air inlet housing) to component stand adapter.

CAUTION

Do not allow rotor to slip down when compressor assembly is rotated from horizontal position.

NOTE

The jack which fits against the compressor tie bolt, is on 6796965 adapter.

c. Adjust jack against rotor and lock it.

d. Turn compressor vertically with diffuser end up.

e. Install seal ring (25, figure 7) in groove of labyrinth stator primary seal (24).

Anti–seize Compound (Never Seez) NS165 32

f. Apply NS165 and install labyrinth stator primary seal on compressor rear wheel shaft.

g. The labyrinth stator primary seal to secondary stator seal (22) fit shall be 0.001T–0.004L in. Position the seal with the six slots to rear. (QA).

CAUTION

Be sure the correct compressor rear primary rotating labyrinth seal is used with the correct compressor rotor.

Compressor Rotor Part Number	Labyrinth Seal Part Number
6793869	6793048
6846200	6793048
*6809400	6794722
*6841200	6794722
6854720	6794722
6875764	6794722
23037350	6794722

*Do not use turbine shaft–to–compressor coupling, part number 6793165, and compressor rear bearing nut, part number 6793497, with these compressor rotors.

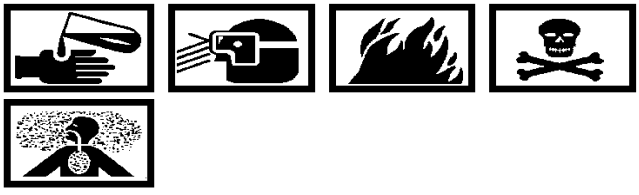

Anti–seize Compound (Never Seez) NS165 32

h. Apply NS165 and install labyrinth rotating primary seal (23), metallic O–ring gasket (19), labyrinth stator secondary seal (22), labyrinth rotating secondary seal (21), and bearing flange seal (20) with the face marked “rear” to the rear.

i. The labyrinth rotating primary seal (23) to fourteenth–stage wheel shaft fit shall be 0.0010L–0.0033L in. (QA).

j. The rotating labyrinth secondary seal (21) to fourteenth–stage wheel shaft fit shall be 0.0010L–0.0033L in. (QA).

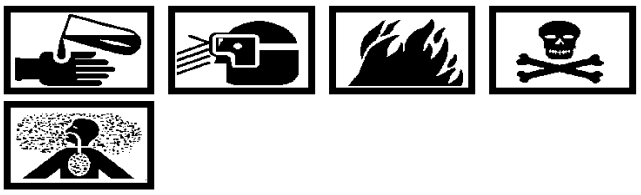

Anti–seize Compound (Never Seez) NS165 32

k. Apply NS165 to bearing (17) and shaft of 14th stage wheel.

NOTE

Install bearing with “O” marking to front and align locking key (18) and center ring slot of labyrinth stator secondary seal (22).

l. Install front half of bearing (17) inner ring, which is marked “O”, balls, outer ring, locking key and rear half of the inner ring, using 6796190 compressor rear bearing and seal driver. (See figure 10.)

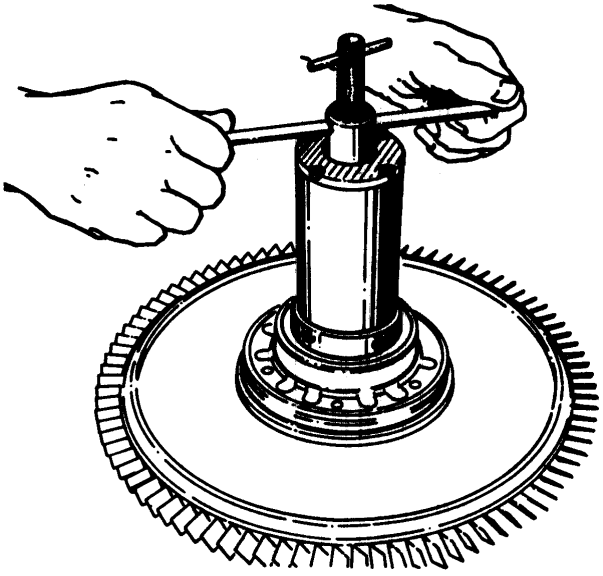

Figure 10. Installing the Rear Bearing with the 6796190 Rear Bearing and Seal Driver

m. The bearing to the bearing cage fit shall be 0.0001L–0.0025L in. (QA).

n. Refer to Table 1 for the bearing to fourteenth stage wheel shaft fit limits. (QA).

Table 1. Compressor Rear Bearing Fit Limits

Bearing Part No.	Fit Limits
23057662	0.0011T – 0.0001T
6846298	0.0011T – 0.0001T
6846717	0.0011T – 0.0001T
6843744	0.0011T – 0.0001T
6843909	0.0011T – 0.0001T
*6871643	0.0011T – 0.0001T

*Alternate for 6846717

o. Install two 6796169 guide pins through labyrinth stator secondary seal (22 figure 7) into labyrinth stator primary seal (24).

p. Install metallic O–ring seal (16) and cover (15) with bolts (14). Torque 70–85 lb in. (QA).

q. Place diffuser front end up on a bench and install 14th–stage and outlet vane assembly (26) into diffuser.

r. Turn vane assembly until four notches drop around the four pins of the diffuser. (This keeps the vane assembly from turning, but it does not lock vane assembly in, so it will not fall out when diffuser assembly is installed to compressor case.)

s. Rotate compressor assembly to horizontal position for assembly or temporarily secure vane assembly to diffuser with 0.032 in. lockwire and install diffuser with compressor in vertical position. After diffuser is installed, remove lockwire.

t. Using 6796169 guide pins as a guide, install diffuser assembly to compressor assembly.

u. Remove guide pins.

Anti–seize Compound (Never Seez) NS165 32

v. Apply a thin coat of NS165 to bolts (27). Install bolts through labyrinth stator secondary seal (22) and labyrinth stator primary seal (24). Install three bolts at the 2, 3 and 9 o'clock holes. Torque bolts to 70–85 lb in. Lockwire. (QA)

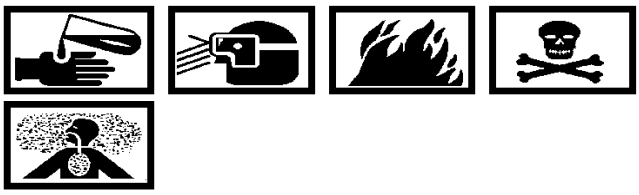

Anti–seize Compound (Never Seez) NS165 32

w. Apply a thin coat of NS165 to all bolt threads and nut faces installed in diffuser splitline flange.

NOTE

Figures in WP 049 00 may be referenced for compressor–to–diffuser splitline bolt hole locations.

x. At splitline positions 1 and 38, install lifting bracket (4, figure 8), bolts (5) and nuts (6). Torque nuts to 170–190 lb in. above drag torque. (QA)

y. At splitline positions 16 through 24 install rear engine mounting plate (11, figure 8). Install bolts and nuts. Torque nuts to 170–190 lb in. above drag torque.

z. At splitline positions 19 and 20, install pressure switch support bracket (14) on stud bolts with pressure switch mounting hole towards position 21. Install nuts and torque to 74–89 lb in.

aa. At splitline positions 3 through 6, install engine side mount forward bracket (1). Install bolts and nuts. Torque nuts to 170–190 lb in. above drag torque. (QA)

ab. Install remaining bolts and nut in diffuser splitline. Torque nuts to 170–190 lb in. above drag torque. (QA)

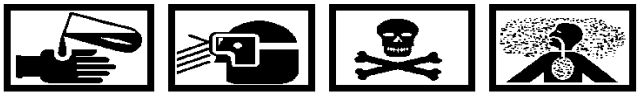

Molybdenum Disulfide Lubricant SAE–AMS–M–7866 19

ac. Apply SAE–AMS–M–7866 molybdenum disulfide to threads of fourteenth–stage wheel.

ad. Install rear bearing nut (13, figure 7) and tighten clockwise using 3855 compressor rear bearing nut wrench and 6796262 compressor rear bearing nut wrench support (figures 5 and 6.) Torque nut to 250 lb ft; loosen and torque to 130–150 lb ft. (QA).

ae. Install metal O–ring gasket (1) on bearing oil nozzle (2) and install in diffuser with bolts (3 and 4). Torque bolts to 70–85 lb in. Lockwire (QA).

af. Install turbine shaft to compressor coupling (6) by aligning lock slots with those of rear bearing nut (13).

ag. Push coupling in until coupling retaining ring (7) sets in its groove in coupling spline. When this occurs, it can be felt and heard, and locks spanner nut in place.

ah. Install compressor extension shaft and side gear. Refer to WP 047 00.

ai. Connect fuel manifold to fuel nozzles. Torque nuts to 80–120 lb in. (QA).

aj. Position bleed air collectors on compressor assembly. Install seal vent tube assemblies.

ak. Install bleed air valves in bleed air collectors. (Refer to WP 089 00.)

al. Position coupling clamps to bleed air collectors. Torque nuts to 8–10 lb in. above drag torque. (QA).

am. Position spray shield assembly to bleed air collectors. Install bolts, washers, and bushings in flange of bleed air collectors. Torque to 70–85 lb in. (QA).

an. Connect cables and lines to bleed air collectors and spray shield. (Ref NAVAIR 02B–5DG–6–1–1.)

9. **COMPRESSOR REAR BEARING LABYRINTH SEAL CLEANING**.

Materials Required

Specification No./Part No.	Nomenclature
MIL–A–6091	Alcohol, denatured ethyl

NOTE

It may be necessary to perform the alcohol injection procedures a second time to achieve satisfactory results.

a. Disconnect diffuser connection to external oil assembly tube P/N 6785458 at the one o'clock position.

b. Disconnect right and left diffuser to scavenge oil pump oil tube assemblies, P/N 6842139 and 6845704, at the five and seven o'clock positions of the diffuser.

Denatured Ethyl Alcohol MIL–A–6091 43

c. Inject approximately sixteen ounces of alcohol, Spec MIL–A–6091, using a wash bottle, P/N XX6504701 into the one o'clock position of the diffuser.

d. Manually rotate compressor while alcohol is being injected. This movement combined with the alcohol produces a cleaning effect to the knife edges of the seal. Excess alcohol will exit from the lower disconnected scavenge oil lines.

e. Reinstall the diffuser connection to extenal oil tube assembly at the one o'clock position.

f. Reinstall the right and left diffuser to scavenge oil pump oil tube assemblies at the five and seven o'clock position of the diffuser.

g. Rerun the engine. If leakage recurs, reject engine.

INTERMEDIATE MAINTENANCE

DISASSEMBLY

COMPRESSOR ASSEMBLY

Reference Material

Accessory Drive Housing Assembly – Removal and Installation . . . . . WP 029 00
Combustion Chamber Outer Casing Assembly, Combustion Liner Assembly, and
Turbine Coupling Shaft Assembly – Removal and Installation . . . . . WP 031 00
Dual Element Fuel Pump Assembly – Maintenance . . . . . WP 058 00
Fuel Control Assembly – Maintenance . . . . . WP 064 00
Solenoid–Manifold Drain Valve Assembly – Maintenance . . . . . WP 066 00
Fuel Nozzle Assemblies – Maintenance . . . . . WP 067 00
(Power Section) External Scavenge Oil Pump Assembly – Maintenance . . . . . WP 078 00
(Power Section) Wiring Harness Assemblies – Removal and Installation . . . . . WP 081 00
Ignition Exciter Assembly – Maintenance . . . . . WP 082 00
Ignition Relay – Maintenance . . . . . WP 084 00
Speed Sensitive Valve Assembly – Maintenance . . . . . WP 088 00
Compressor Bleed Air Valve Assemblies – Maintenance . . . . . WP 089 00
Compressor Bleed Air Filter Assembly – Maintenance . . . . . WP 090 00
Anti–icing Solenoid Valve Assembly – Maintenance . . . . . WP 091 00
Anti–air Icing Air Valve Assembly – Removal and Installation . . . . . WP 092 00
Engine Monitoring System Components – Maintenance . . . . . WP 094 00
External Tubing, Cabling, and Clamping Supplement Manual . . . . . NAVAIR 02B–5DG–6–1–1

Alphabetical Index

Subject Page No.
Compressor Assembly – Disassembly 2
Compressor Air Inlet Housing Removal 8
Compressor Extension Shaft, Bearing Cage, and Studding Housing Removal 6
Compressor Front Bearing and Labyrinth Seals Removal 10
Compressor Casing Removal 12
Compressor Rotor, Rear Bearing, and Labyrinth Seal Removal 13
Compressor Shaft Coupling, Oil Tube Adapter, and Oil Nozzle Removal 2
External Component Removal 2

Record of Applicable Technical Directives

None

1. **COMPRESSOR ASSEMBLY – DISASSEMBLY.**

2. EXTERNAL COMPONENTS REMOVAL.

Materials Required

Specification No./Part No.	Nomenclature
Berol No. 753	Pencil, Silver Eagle Verithin

CAUTION

The compressor assembly is to be maintained in the horizontal position until all external lube system components are removed from the inlet housing. These include the accessory drive housing output shaft, extension shaft and housing, and pressure oil tube. This is necessary to assure that no oil contaminates the compressor rotor when the compressor is set vertical during disassembly.

a. Identify major subassemblies, component parts of the engine and their subassemblies, and all auxiliary components and their parts, at time of disassembly, and store in suitable containers.

b. Remove components as an assembly whenever possible. Cap or plug all openings.

NOTE

NAVAIR 02B–5DG–6–1–1 is used to install external tubing, cables, and clamps during engine build–up. Marking these locations will aid installation after maintenance.

c. Using Berol No. 753 silver pencil, match mark compressor external bracket locations.

d. Remove external components. Refer to table 1 for corresponding work package numbers.

e. Remove nuts (6, figure 1) and washers (5) from the cyclone breather studding body (3) and cover (4).

f. Remove cyclone breather studding body, cover, and gasket (2) from the compressor air inlet housing (1).

3. COMPRESSOR SHAFT COUPLING, OIL TUBE ADAPTER, AND OIL NOZZLE REMOVAL.

Support Equipment Required

Part No./Type Designation	Nomenclature
3855	Wrench, compressor rear bearing nut
6795905	Stand, engine component turnover
6796262	Support, compressor rear bearing nut wrench
6796819	Adapter, attaching, compressor unit to 6796847 adapter
6796847	Adapter, attaching, 6795905 stand to 6796819 adapter
6796859	Adapter attaching, power section to 6797692 adapter
6797691	Adapter, compressor lifting

CAUTION

Prior to lifting the compressor, the 6796784 compressor lifting adapter center of gravity must be properly adjusted.

a. Remove the compressor from parallel rail or engine overhaul stand using 6797691 compressor lifting adapter and 6796859 power section attaching adapter.

b. With the compressor in a horizontal position, attach the rear flange of the compressor diffuser to the 6796819 adapter and attach 6796847 adapter to the 6795905 turnover stand.

Table 1. Removal of External Components

Task	WP No.
Accessory Drive Housing	029 00
Engine Spray Shield Baffle, Engine Spray Shield Upper Baffle, and Engine Spray Shield Lower Baffle	031 00
Engine Rear Mount Bracket and Engine Rear Mounting Plate	031 00
Dual Element Fuel Pump	058 00
Fuel Control	064 00
Fuel Nozzles (as required)	067 00
Power Section External Scavenge Oil Pump	078 00
Left, Right and Interconnecting Wiring Harnesses	081 00
Ignition Exciter	082 00
Ignition Relay	084 00
Speed Sensitive Valve	088 00
Bleed Air Valves	089 00
Compressor Bleed Air Filter	090 00
Anti–icing Solenoid Valve	091 00
Anti–icing Valves (2)	092 00
Temperature Sensing Probe and Anti–icing Tube	093 00
Air Sensing Tip and 90° Reducing Elbow	094 00
Compressor Accelerometer	094 00
Combination Total Temperature–Pressure Probe (Including Compressor Bleed Air Collectors)	094 00

NOTE

As the compressor is disassembled, check for damage and/or leakage; particularly, the kind which may be less noticeable or not noticed after cleaning. This may be an accumulation of dirt or stains.

c. Remove the compressor shaft coupling (6, figure 2) from the 14th stage compressor shaft by compressing the coupling retaining ring (5) at the two slots in the rear face of the shaft and detaching the compressor coupling.

d. Remove the lockwire and two bolts (9 and 11) attaching bearing oil nozzle (10).

e. Remove bearing oil nozzle and metal gasket (8).

f. Remove bolts (4) attaching scavenge oil tube adapter (2) and diffuser oil sump screen (3) and remove the adapter, screen, and gasket (1).

g. Loosen the three remaining bolts, but do not back off the bolts more than one turn.

NOTE

The compressor rear bearing nut is located at the front center of the compressor diffuser.

h. Using 3855 wrench and 6796262 support, loosen compressor rear bearing nut, but do not back off more than one turn.

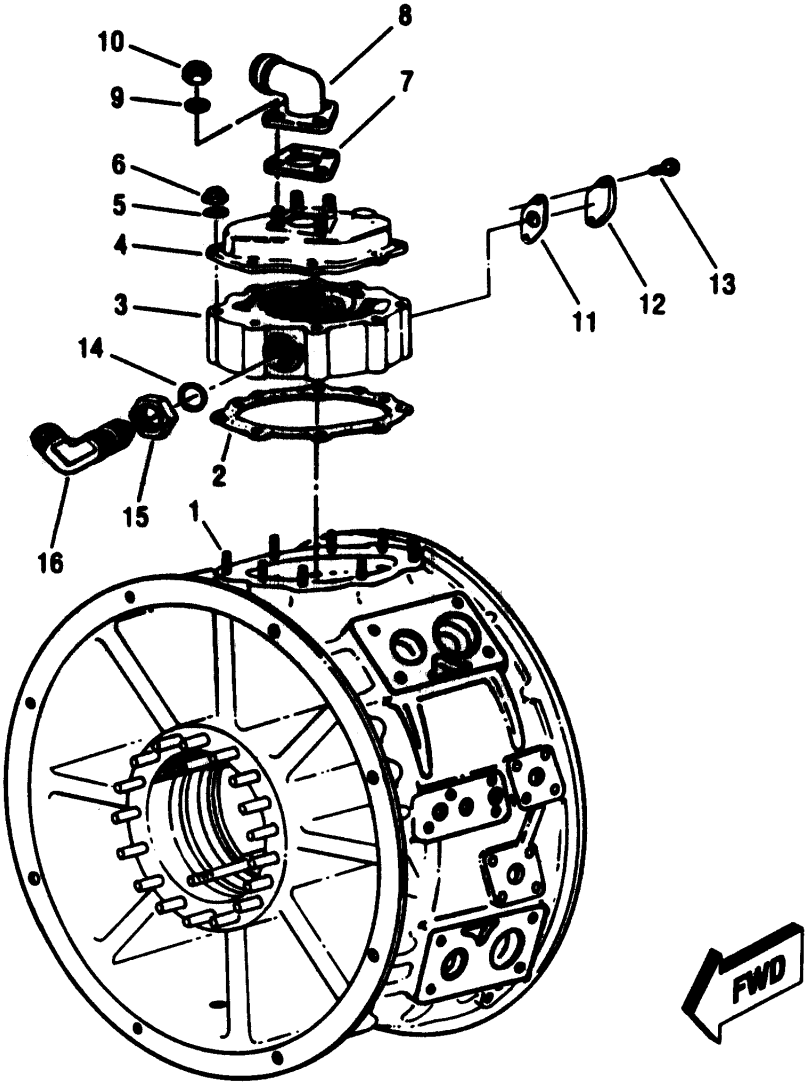

1. Inlet Housing
2. Gasket
3. Cyclone Breather Studding Body
4. Cyclone Breather Studding Cover
5. Washer
6. Self–locking Nut
7. Gasket
8. Elbow
9. Washer
10. Self–locking Nut
11. Gasket
12. Vent Port Cover
13. Bolt
14. Preformed Packing
15. Nut
16. Elbow

Figure 1. Cyclone Breather Removal

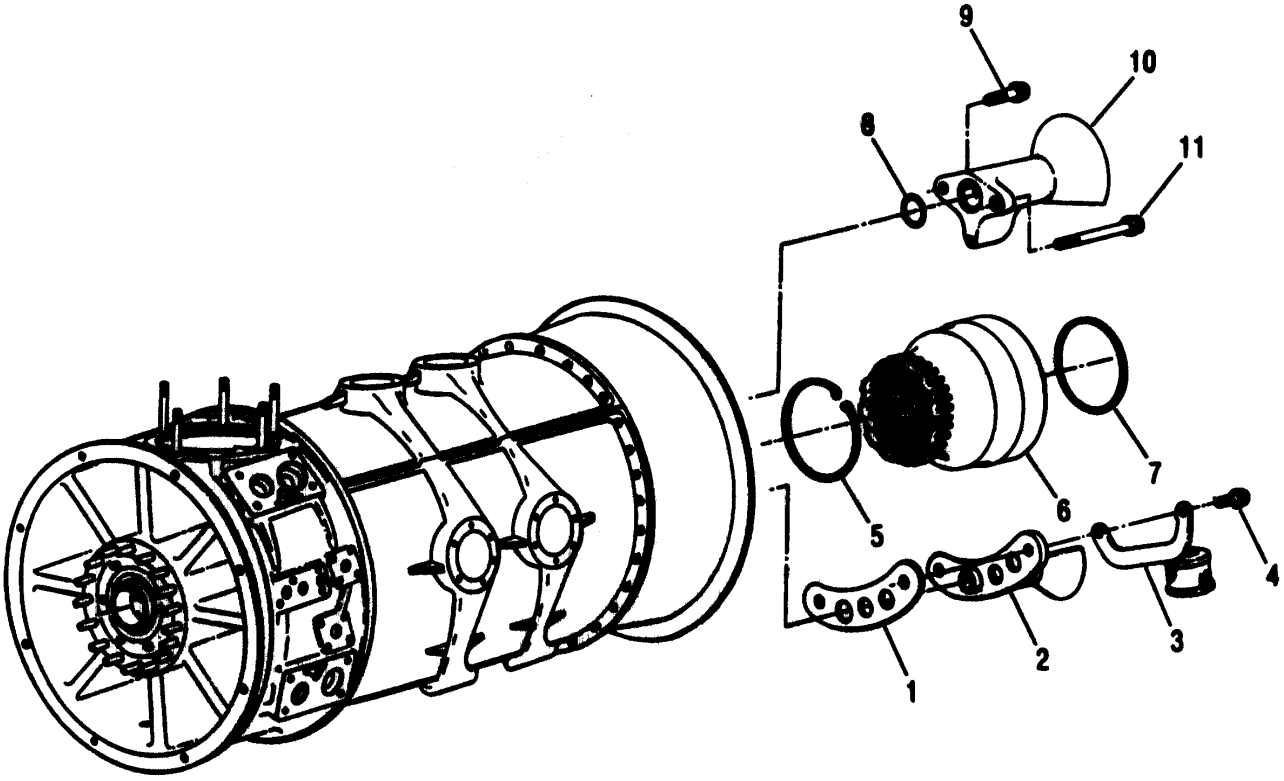

1. Gasket
2. Front Turbine Scavenge Oil Tube Adapter
3. Diffuser Oil Sump Screen
4. Bolt
5. Coupling Retaining Ring
6. Compressor Shaft Coupling
7. (Oil Dam) Internal Retaining Ring
8. Metal Gasket
9. Bolt
10. Rear Compressor Bearing Oil Nozzle
11. Bolt

Figure 2. Compressor Shaft Coupling, Oil Tube Adapters, and Oil Nozzle Removal

4. COMPRESSOR EXTENSION SHAFT, BEARING CAGE, AND STUDDING HOUSING REMOVAL.

Support Equipment Required

Part No./Type Designation	Nomenclature
3464–4	Wrench, compressor extension shaft
3732	Holder, compressor extension shaft
3838	Puller, compressor extension shaft bearing housing
6796125–5	Plug, side accessories gear bearing
6796125–6	Base, side accessories gear bearing
6796235	Puller plates, compressor extension shaft bearing
6796249	Support, accessory drive bearing removal

a. Remove nuts (12 and 13, figure 3).

b. Remove torquemeter bearing oil nozzle (15).

NOTE

The puller portion of the tool is installed on the extension shaft at the two horizontal studs only. The cross brace is secured to the compressor air inlet housing.

c. Install 3838 compressor extension shaft bearing housing puller. (See figure 4.)

NOTE

Ensure that shims (16, figure 3) are retained on the extension shaft (1) after removal.

d. Remove compressor extension shaft (1), bearing cage (19), and studding housing (3) from compressor air inlet housing.

e. Reach inside and remove side gear (6) from compressor air inlet housing; this includes ball bearings (7).

f. Remove preformed packings (2 and 8).

g. Remove nuts (5) from front bearing oil jet (4), then remove front bearing oil jet from studding housing (3).

CAUTION

Improper oven setting can cause bearing damage. Be sure to check oven temperature units or use an oven thermometer indicated before placing the assembly.

WARNING

To prevent personal injury, use thermal gloves when handling hot parts.

h. Preheat parts oven to 250–275 degrees F (121–135 degrees C). Place the extension shaft assembly in the oven with the shaft position vertically, splined end down. Heat for 15–20 minutes until the extension shaft housing separates from the shaft and bearing cage assembly.

i. Remove extension shaft (1) and bearing cage (19) from studding housing (3).

j. Remove retaining ring (18) from bearing cage (19).

k. Remove bearing locking key (14) from bearing cage (19) and ball bearing (17).

l. Remove extension shaft (1) from bearing cage (19) and remove front half of ball bearing (17) outer race from bearing cage.

m. Install 3732 holder in a vise.

n. Insert extension shaft (1) splined end in 3732 holder.

o. Straighten tangs on key washer (10) and using 3464–4 wrench, remove spanner nut (9) and key washer (10). (See figure 5.)

p. Remove bearing spacer (11, figure 3) from extension shaft (1).

q. Place 6796249 support on an arbor press and place 6796235 puller plates on the support. (See figure 6.)

r. Insert extension shaft (1, figure 3) on tooling and remove ball bearing (17) from extension shaft.

s. Place 6796125–6 base on an arbor press, and using 6796125–5 plug, remove ball bearings (7) from side gear (6) shaft.

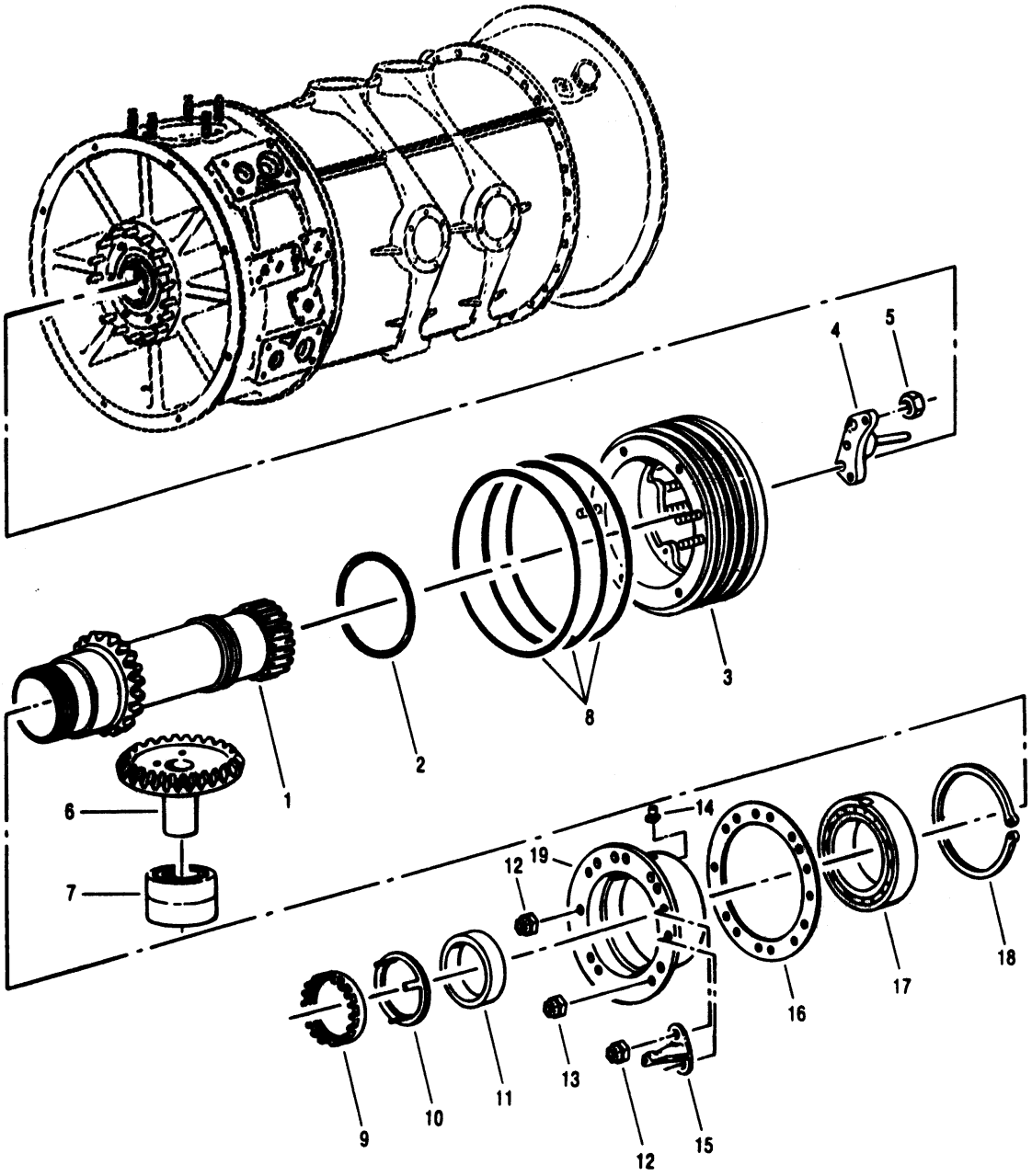

1. Compressor Extension Shaft
2. Preformed Packing
3. Compressor Extension Shaft Studding Housing
4. Compressor Front Bearing (Oil) Jet
5. Nut (2)
6. Compressor Side Gear
7. Ball Bearing (2)
8. Preformed Packing
9. Spanner Nut (LH Thread)
10. Key Washer
11. Compressor Extension Shaft Bearing Spacer
12. Nut (3)
13. Special Nut (4)
14. Compressor Extension Shaft Bearing Locking Key
15. Torquemeter Bearing Oil Nozzle
16. Shim (AR)
17. Ball Bearing
18. Retaining Ring
19. Compressor Extension Shaft Bearing Cage

Figure 3. Compressor Extension Shaft, Bearing Cage, and Studding Housing Removal

5. COMPRESSOR AIR INLET HOUSING REMOVAL.

Support Equipment Required

Part No./Type Designation	Nomenclature
2308	Puller, tee handle
23033009	Pusher, entrance guide vane

NOTE

Remove compressor air inlet housing with compressor in horizontal position.

a. Remove bolts (1, figure 7) and washers (2).

b. Remove bolts attaching the reduction gear–to–power section strut fittings to each side of the compressor air inlet housing.

c. Remove set screws from each strut fitting (puller holes).

d. Using 2308 pullers (two in each strut fitting), remove strut fittings and dowels from compressor air inlet housing. (See figure 8.)

e. Remove compressor air inlet housing–to–compressor case splitline bolts.

f. Remove compressor air inlet housing from compressor case.

g. Remove anti–icing air distribution tubes (3, figure 7).

h. Remove bolts attaching compressor air inlet anti–icing vane (4) to compressor air inlet housing (8).

i. Using 23033009 pusher (See figure 9.), remove compressor air inlet anti–icing vane (4, figure 7).

j. Remove three large preformed packings (5, 6, and 7).

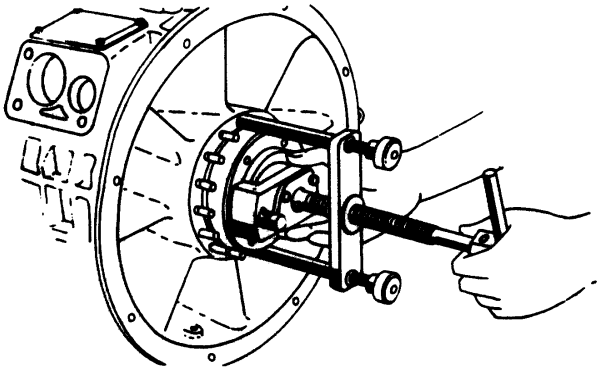

Figure 4. Removal of Compressor Extension Shaft , Bearing Cage, and Studding Housing Using 3838 Puller

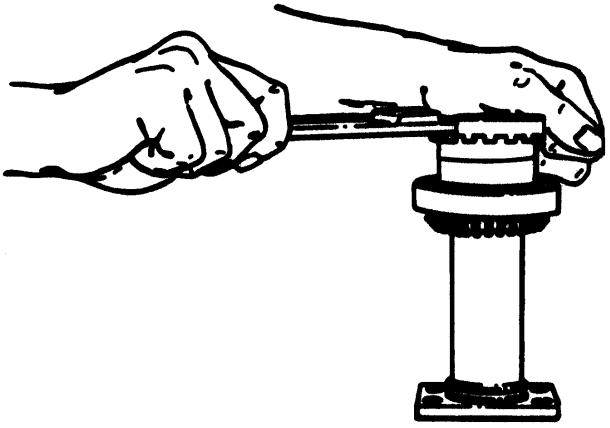

Figure 5. Removing Spanner Nut From Compressor Extension Shaft Using 3732 Holder and 3464–4 Wrench

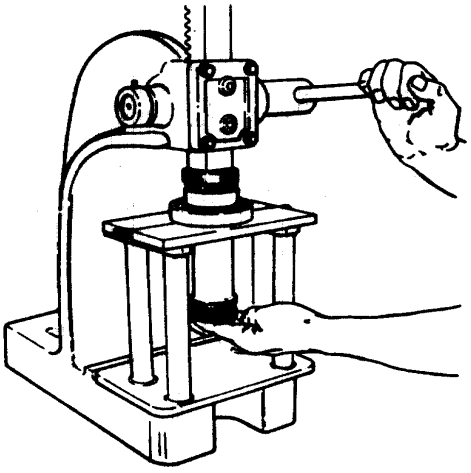

Figure 6. Removing the Ball Bearing from Compressor Extension Shaft Using 6796249 Support and 6796235 Puller Plates

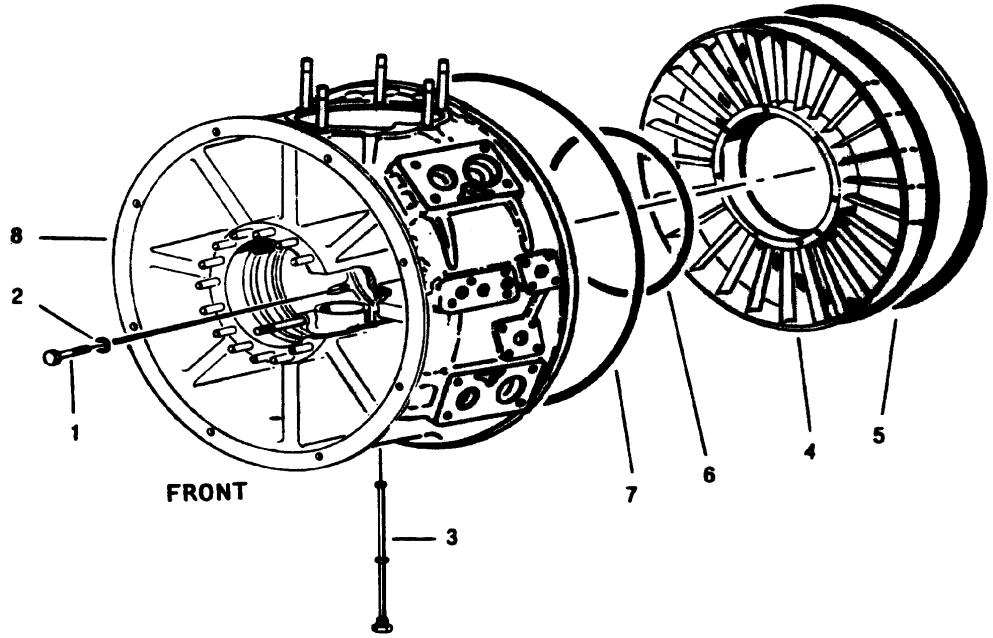

1. Bolt (4)
2. Washer (4)
3. Anti–Icing Air Distribution Tubes (6)
4. Compressor Air Inlet Anti–icing Vane
5. Preformed Packing
6. Preformed Packing
7. Preformed Packing
8. Compressor Air Inlet Housing

Figure 7. Compressor Air Inlet Housing Removal

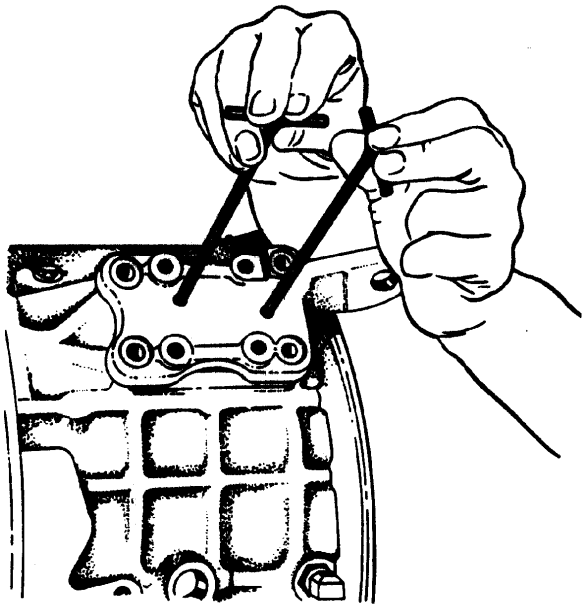

Figure 8. Removing Reduction Gear–to–Power Section Strut Fitting Using 2308 Tee Handle Pullers

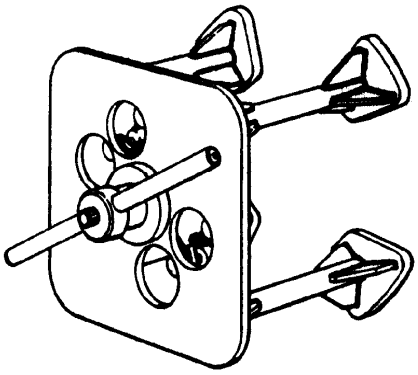

Figure 9. 23033009 Entrance Guide Vane Pusher

6. COMPRESSOR FRONT BEARING AND LABYRINTH SEALS REMOVAL.

Support Equipment Required

Part No./Type Designation	Nomenclature
3464–4	Wrench, compressor extension shaft and front bearing nut
3464–5	Holder, compressor extension shaft and front bearing nut
6796194	Drift, compressor front bearing outer race
6796901	Compressor, compressor front bearing outer race
6796970	Storage box, compressor front labyrinth seal
6796971	Puller, front compressor labyrinth bearing and seal

Materials Required

Specification No./Part No.	Nomenclature
MIL–PRF–23827	Grease

a. Rotate compressor assembly to a vertical position.

NOTE

The roller bearing outer race is out–of–round and may remain with the compressor air inlet housing.

b. Locate roller bearing (3, figure 11) outer race. If outer race remains with the compressor air inlet housing, perform steps c and d. If outer race (roller bearing) is on the compressor rotor hub, perform steps e thru h.

c. Using 6796194 drift, remove roller bearing (3) outer race and rollers from compressor air inlet housing. (See figure 10.)

d. Remove compressor front bearing (anti–rotation) key (4, figure 11).

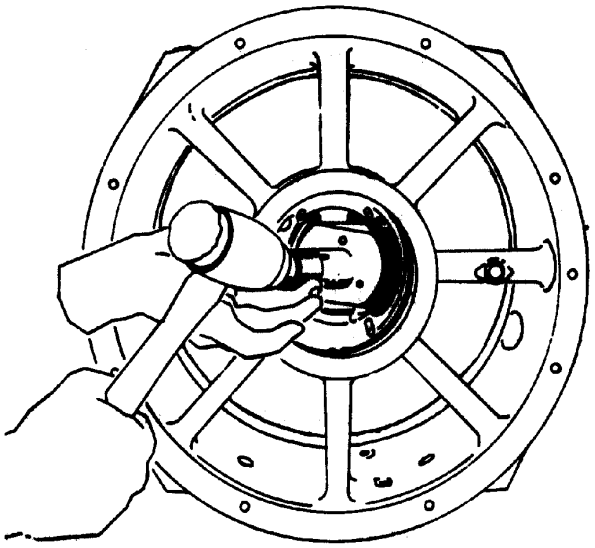

Figure 10. Removing Roller Bearing Outer Race Using 6796194 Drift

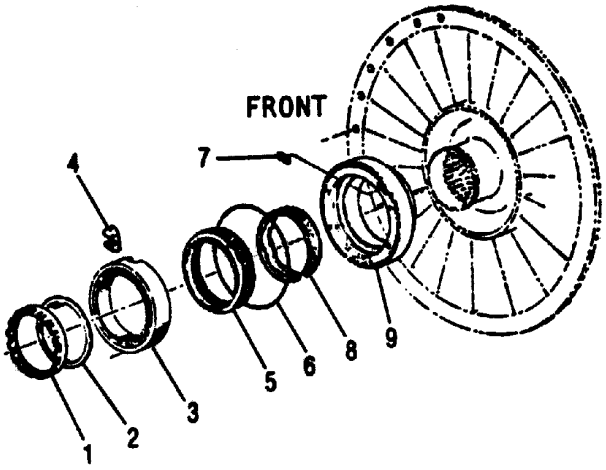

1. Spanner Nut (L.H. Thread)
2. Key Washer
3. Roller Bearing
4. Compressor Front Bearing Key
5. Compressor front bearing Outer Labyrinth seal
6. Preformed Packing
7. Preformed Packing
8. Rotor Inner Labyrinth Seal
9. Compressor Front Labyrinth Seal

Figure 11. Front Compressor Bearing Details

General Purpose Grease MIL–PRF–23827 18

e. Apply MIL–PRF–23827 grease on the inside diameter of the 6796901 compressor tool (figure 12) to prevent damaging the roller bearing outer race.

f. Install 6796901 compressor tool over roller bearing (3, figure 11) outer race.

g. Remove the outer race and rollers from the compressor rotor hub.

h. Remove the outer race and rollers from 6796901 compressor tool.

i. Disengage the key washer (2) from the spanner nut slot.

j. Place the 3464–4 wrench and 3464–5 holder combination over the front of compressor rotor shaft. (See figure 13.)

k. Hold the wrench and holder in place and use an allen wrench to expand the splined member of the holder firmly against the rotor shaft splines.

l. Secure the holder against the wrench by turning the knurled outer member until finger tight.

m. Remove the left–hand threaded spanner nut (1, figure 11).

n. Install 6796971 puller over bearing inner race. (See figure 14.)

o. Remove the bearing inner race and compressor front bearing outer labyrinth seal (5, figure 11).

p. Remove the front compressor labyrinth seal (9) from the compressor rotor.

q. Remove the preformed packings (6 and 7) from the rotor inner labyrinth seal (8).

r. Place the labyrinth seal parts in 6796970 storage box (figure 15).

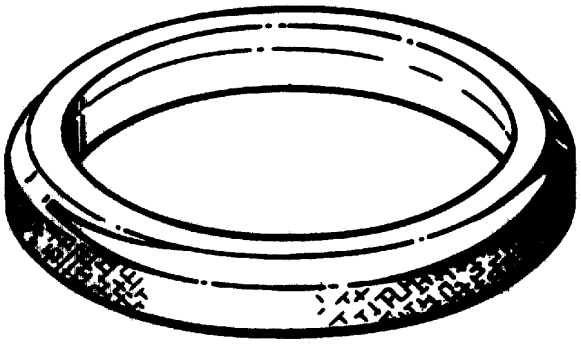

Figure 12. 6796901 Compressor Front Bearing Outer Race Compressor

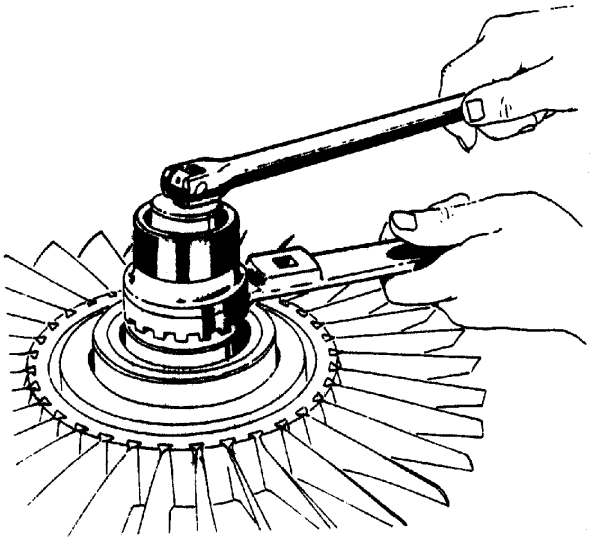

Figure 13. Removing Compressor Rotor Front Bearing Retaining Nut Using Wrench 3464–4 and Holder 3464–5

7. COMPRESSOR CASING REMOVAL.

Support Equipment Required

Part No./Type Designation	Nomenclature
3718	Puller, splitline bolt
6796540	Adapter, lifting (use with 6796833–201)
6796833–201	Adapter assembly

a. Remove the splitline bolts and attachment hardware from the compressor case–to diffuser splitline flange (Reference NAVAIR 02B–5DG–6–1–1). Use the 3718 splitline bolt puller (figure 16) when needed.

b. Remove the engine side mount front brackets. Remove piloted engine side mount bolt and spacer from from the front bracket.

c. Remove the compressor case axial splitline bolts.

d. Install four 0.250–28 threaded bolts (with at least 0.78 effective threaded length) in the tapped holes in the horizontal flanges of the compressor case to jack the case halves apart (two tapped holes in each flange). (See figure 17.)

e. Separate the splitlines equally on both sides using the jack screws until all four splitline dowel pins are fully disengaged before pivoting the case halves to remove each case half from the rotor.

CAUTION

Hoist is attached as a precaution to protect the rotor during case removal.

f. Install 6796540 lifting adapter on 6796833–201 adapter assembly and install adapters on the front of compressor rotor shaft and attach hoist. (See figure 18.)

g. Carefully remove the compressor casing from the compressor rotor by hand.

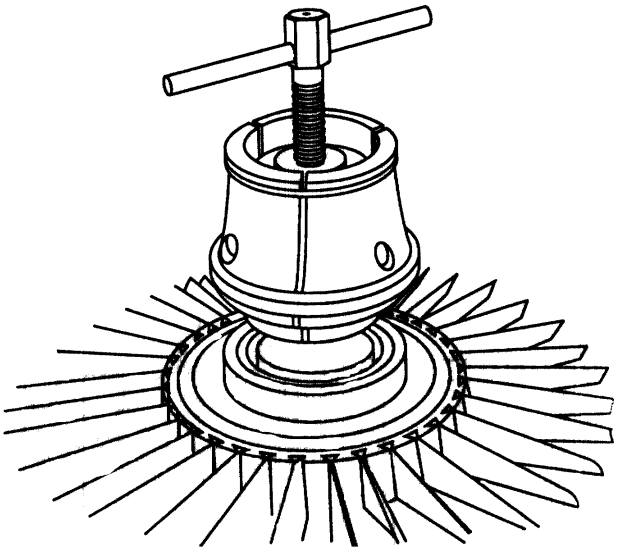

Figure 14. 6796971 Front Compressor Labyrinth Bearing and Seal Puller

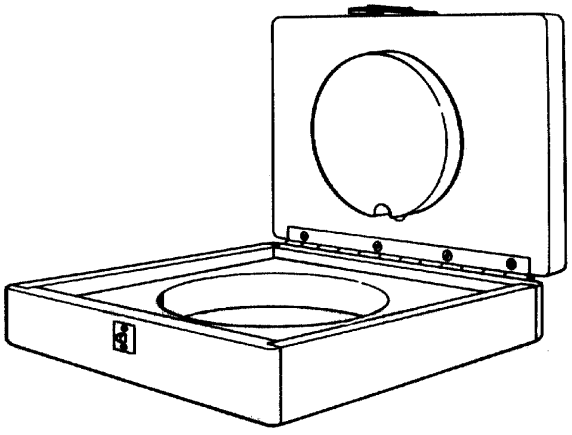

Figure 15. 6796970 Compressor Front Labyrinth Seal Storage Box

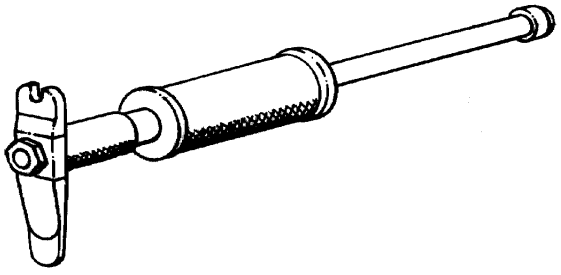

Figure 16. 3718 Splitline Bolt Puller

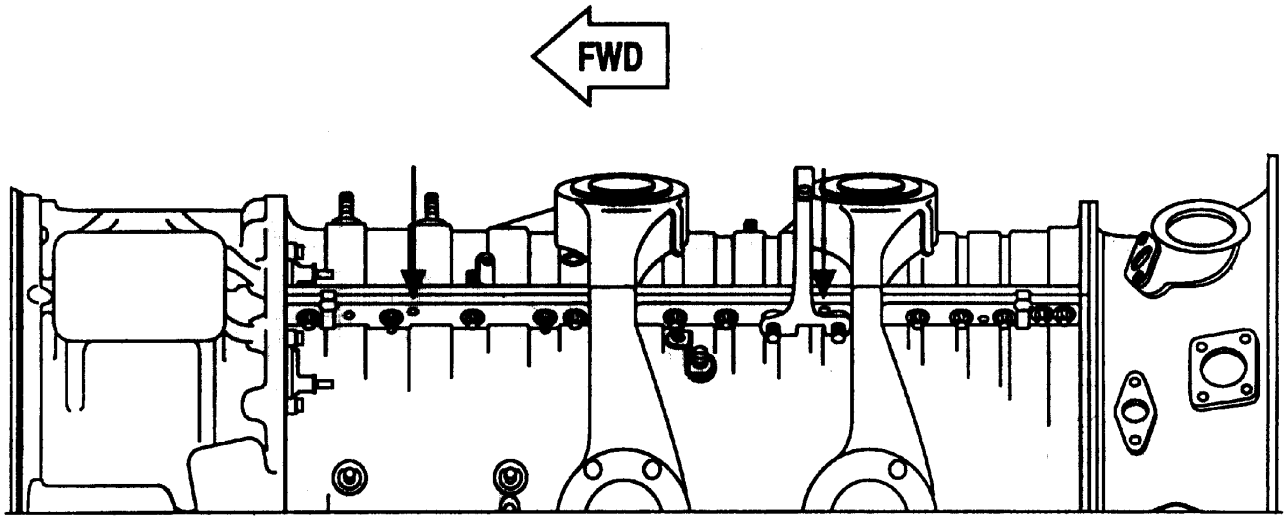

Figure 17. Compressor Jack Screw Hole Locations

8. COMPRESSOR ROTOR, REAR BEARING, AND LABYRINTH SEAL REMOVAL.

Support Equipment Required

Part No./Type Designation	Nomenclature
3855	Wrench, compressor rear bearing nut
6796262	Support, compressor rear bearing nut wrench
6796833	Stand, compressor rotor transportation and storage
6796833–202	Adapter, lifting eye
6796886	Cover, compressor rotor
6797708	Puller, compressor rear bearing and double labyrinth seal

a. Remove three (previously loosened) bolts in the diffuser hub attaching the rear bearing and seal members to the compressor diffuser.

b. Install 6796833–202 lifting eye adapter to the 14th stage compressor shaft.

c. Using 3855 wrench and 6796262 support, remove the compressor rear bearing nut (previously loosened).

d. Lift the compressor rotor out of the diffuser.

e. With the compressor rotor attached to the hoist, install 6797708 puller and remove the rear bearing and labyrinth seal members from the rotor. (See figure 18.)

f. Install the compressor rotor in the 6796833 compressor rotor transportation and storage stand. (See figure 19.)

g. Install 6796886 cover (figure 20) on the stand over the compressor rotor.

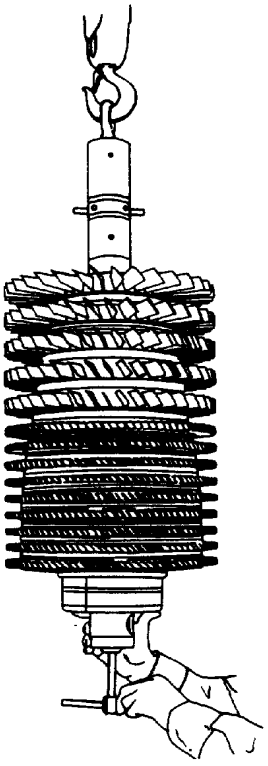

Figure 18. Removing Rear Bearing and Labyrinth Seal using 6797708 Puller.

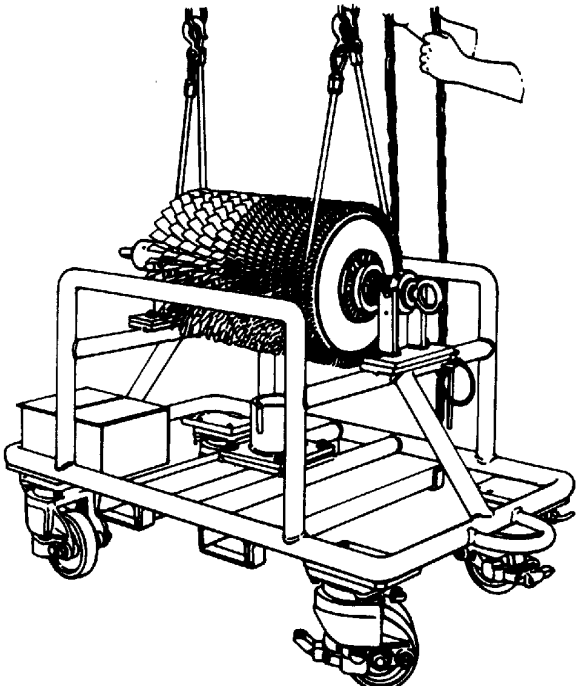

Figure 19. Installing Compressor Rotor in 6796833 Transportation and Storage Stand

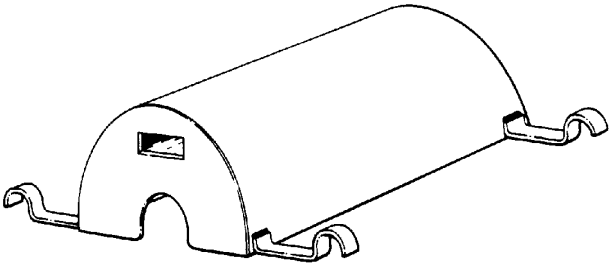

Figure 20. 6796886 Compressor Rotor Cover

INTERMEDIATE MAINTENANCE

CLEANING, INSPECTION AND REPAIR

COMPRESSOR AIR INLET HOUSING, COMPRESSOR CASE, COMPRESSOR ROTOR AND DIFFUSER ASSEMBLIES

Reference Material

General Gas Turbine Engine Bulletin . . . . . No. 23
Cleaning and Corrosion Treatment – Standard Practices . . . . . WP 013 00
Compressor Blade and Vane – Inspection and Repair . . . . . WP 045 00
Compressor Assembly – Disassembly . . . . . WP 047 00
Maintenance of Aeronautical Anti-friction Bearings . . . . . NAVAIR 01-1A-503
Cleaning Materials . . . . . NAVAIR 07-1-503
Turbine Engine Cleaning Instructions . . . . . NAVAIR 07-1-504

Alphabetical Index

Subject Page No.
Air Inlet Housing Inspection and Repair 4
Air Inlet Housing Surface Treatment 5
Bearing Servicing 11
Cleaning of Diffuser Sump Area (Combustion Outer Casing Removed) 3
Compressor Air Bleed Collectors 6
Compressor Air Inlet Vane Assembly Inspection 6
Compressor Blades and Vanes, Inspection and Repair 3
Compressor Case Inspection and Rework 3
Compressor Case Cleaning 2
Compressor Extension Shaft Bearing Retaining Ring Inspection 4
Compressor Extension Shaft Housing Inspection 4
Compressor Front and Rear Bearing Locking Keys Inspection 1
Compressor Front Bearing Oil Seal Inspection 17
Compressor Outlet Vane Inspection 7
Compressor Rear Bearing and Seal Inspection 7
Compressor Rear Bearing Oil Jet Inspection 7

Alphabetical Index (Cont)

Subject Page No.

Compressor Rotor Assembly Cleaning 2
Compressor Shaft Coupling Inspection 7
Compressor Vane Seals 3
Diffuser Assembly Inspection and Repair 6
General 2
Rotor Interstage Seals 3

Record of Applicable Technical Directives

None

1. **GENERAL.**

2. Clean compressor parts in accordance with standard practices (WP 013 00) and special instructions in this WP.

3. **COMPRESSOR ROTOR ASSEMBLY CLEANING.**

Materials Required

Specification No./Part No.	Nomenclature
A-A-1206	Abrasive, crocus cloth
MIL-T-23397	Tape, pressure sensitive, masking
MIL-PRF-680, Type II	Solvent, dry cleaning

a. Mask holes in first stage wheel with tape, MIL-T-23397 to prevent entrance of grit or solvent.

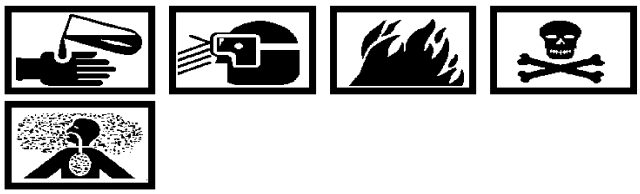

Dry Cleaning Solvent
MIL-PRF-680, Type II **3**

b. Spray the rotor with solvent, MIL-PRF-680, Type II and air dry.

NOTE

Slowly rotate the rotor and apply the spray at the blade tips in a downward position to prevent entrance of the solvent into the assembly.

c. Spray with solvent, MIL-PRF-680, Type II and air dry. Thoroughly clean blade slots to remove any grit.

d. If metal buildup is present on the OD of wheel spacers, remove, as required, with crocus cloth.

e. Remove masking in first stage wheel after cleaning.

4. **COMPRESSOR CASE CLEANING.**

Materials Required

Specification No./Part No.	Nomenclature
MIL-PRF-680, Type II	Solvent, dry cleaning

Dry Cleaning Solvent
MIL-PRF-680, Type II **3**

a. Spray casings and vane assemblies with solvent, MIL-PRF-680, Type II in such a position as to prevent solvent from entering grooves of casing where vane assemblies are installed. Air dry the assembly.

b. Refer to WP 045 00 for inspection and repair limits.

5. **CLEANING OF DIFFUSER SUMP AREA (COMBUSTION OUTER CASING REMOVED).**

CAUTION

Carbon deposits in the diffuser sump (figure 1) can become dislodged during turbine unit replacement and cause blockage of the sump drain. A thorough cleaning of this area is essential when the turbine unit is changed.

a. Diffuser, diffuser drain and tubes.

(1) Clean sump area.

(2) Clean sump drain and tube.

(3) Remove and clean both diffuser scavenge oil tubes.

b. Diffuser sleeve.

(1) Locally fabricate a tool that will help remove the carbon deposits in the area just outboard of the diffuser sleeve.

(2) Clean area thoroughly.

6. **COMPRESSOR BLADES AND VANES, INSPECTION AND REPAIR.**

a. Refer to WP 045 00 for inspection and rework limits.

7. **ROTOR INTERSTAGE SEALS.**

a. Inspect the rotor interstage seal surfaces for grooves caused by contact with stator vane seal lips. A groove up to 0.005 in. deep is acceptable after removal of sharp or rough edges.

8. **COMPRESSOR VANE SEALS.**

a. Refer to WP 045 00 for inspection.

9. **COMPRESSOR CASE INSPECTION AND REWORK.**

NOTE

A seal break-in run is required during engine test when a new case assembly is installed. Use the turbine seal break-in schedule.

a. Inspect and rework compressor per WP 045 00.

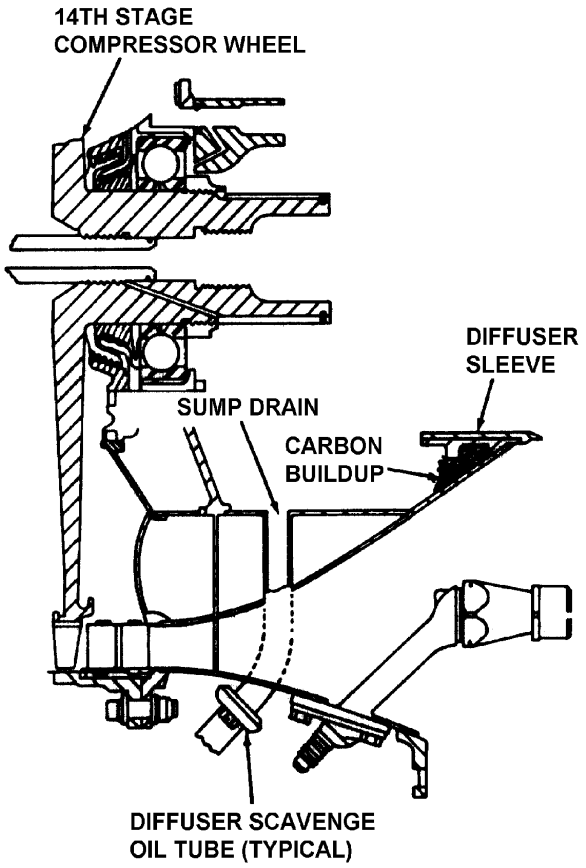

Figure 1. Diffuser Sump Carbon Buildup Location

CAUTION

Handle compressor case assembly in such a manner as to avoid damage to the lining.

b. Inspect the inside of compressor case for damage. Remove metal pickup and break sharp edges. Replace case assembly when case lining damage exceeds the following limits:

(1) Stages 1 through 4 and 6 through 8: 15 percent of lining chipped or worn through to the inner bond.

(2) Stages 5 and 10: No limit on amount of lining chipped or worn through to the inner bond.

(3) Stages 9 and 11 through 14: 10 percent of lining chipped or worn through to the inner bond.

10. **COMPRESSOR EXTENSION SHAFT BEARING RETAINING RING INSPECTION.**

NOTE

Wear is not acceptable on the side of the ring adjacent to the bearing.

a. Inspect the retaining ring for wear.

11. **COMPRESSOR EXTENSION SHAFT HOUSING INSPECTION.**

a. Cracks or crack indications that bleed back (with or without the use of a developer) are not acceptable.

b. Fretting of housing OD is acceptable if OD is not less than 5.558 in.

c. Fretting, chafing, or galling of housing rear face is not acceptable. (Fretting or chafing, if severe is galling; surface material is worn off.)

12. **AIR INLET HOUSING INSPECTION AND REPAIR.**

CAUTION

Blending shall not be performed within 0.250 in. of an oil or air passage.

a. Obvious damage, such as cracks in bolt holes on outer rims, is not acceptable.

b. Replace housing if it is cracked or damaged in any way which would prevent practicable repair.

c. Line indications on a strut, at outboard or inboard rims, which are indicated by dye-penetrant inspection and are determined by blending (0.015 in. maximum depth) to be chain porosity, are acceptable.

d. Cracks in these, or any strut location (which are not removed by blending within the limits specified above), are not acceptable.

e. Blend nicks, dents, and scratches, up to 0.125 in. in depth, on all areas of housing except trailing edge of strut and in an area 1.0 in. wide forward of trailing edge on either side of strut.

f. Blended surfaces must be smooth and material removed kept to a minimum.

g. Blend nicks, dents, and scratches, up to 0.250 in. in depth, on trailing edge of struts and in an area 1.0 in. wide forward from trailing edge on either side of struts.

h. Blended surfaces must be smooth and the material removed kept to a minimum.

i. Wear on forward flange face or on rear bevel side (20 degree angle) of housing is acceptable providing it does not exceed 0.020 in. in depth over entire surface or does not exceed 0.060 in. in depth in any 15 degree segment, providing there is at least 15 degrees between locations.

j. Replace air inlet housing if wear on forward face breaks both edges.

k. Replace air inlet housing when mounting pad holes are oversize or damaged.

l. Inspect air inlet housing for corrosion. If corrosion does not exceed a depth of 0.100 inch surface treat the air inlet housing in accordance with paragraph 13, this WP. Replace air inlet housing if corrosion exceeds a depth of 0.100 inch.

13. **AIR INLET HOUSING SURFACE TREATMENT.**

Materials Required

Specification No./Part No.	Nomenclature
MIL-PRF-23377	Coating, High Solids Epoxy Primer
MIL-PRF-85285	Coating, Polyurethane
MIL-PRF-85582	Primer Coating, Epoxy Water-borne
Actithane H251	Thinner
MIL-A-4864	Wool, aluminum
H-B-178	Brush, Hog Bristle or heavy fiber
MIL-C-5541, class 1-A	Coating, chemical conversion
MIL-DTL-81706	Material, conversion coating
MIL-S-4383	Compound, sealing (Buna-N)

a. Refer to paragraph 4 for cleaning.

WARNING

Use approved goggles or faceshield when using compressed air for cleaning, cooling or drying. Air pressure shall not exceed 30 psig. Compressed air shall not be directed towards self or other persons.

b. Flush housing thoroughly with fresh water and dry with compressed air.

c. Completely remove corrosion using aluminum wool, MIL-A-4864, brass wire brush and/or heavy fiber brushes, H-B-178.

d. Flush repaired areas with fresh water and dry with compressed air.

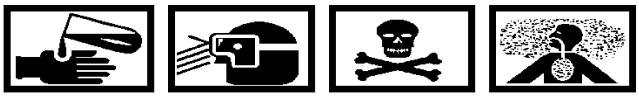

Chemical Conversion Coating
MIL-DTL-81706 **45**

e. Treat corroded areas with MIL-DTL-81706, conversion coating material.

Chemical Conversion Coating
MIL-C-5541 **29**

f. Treat per MIL-C-5541 procedure to produce a yellow coating on damaged area. Water rinse thoroughly and allow to air dry.

g. Apply a corrosion resistant film, MIL-C-5541, class 1-A on aluminum housings.

NOTE

Either High Solids Epoxy Primer Coating, MIL-PRF-23377, or Waterborne Epoxy Primer coating, MIL-PRF-85582, and Polyurethane Coating, MIL-PRF-85285, may be used for touch-up repair of damaged paint.

The surface to be coated must be clean and free of oil.

h. If using Waterborne Epoxy Primer Coating, MIL-PRF-85582, and Polyurethane Coating, MIL-PRF-85285, apply as follows:

CAUTION

If distilled or deionized water is specified, do not add tap water. Tap water will have an adverse effect on film properties. Only add the specified amount of water. Do not add excessive water. Never mix materials from different manufacturers.

(1) Waterborne Epoxy Primer Coating, MIL-PRF-85582, is supplied as a two component kit which requires mixing. Consult manufacturer's instructions for proper mixing procedures.

NOTE

In general, the pot life of waterborne epoxy primer coating is four hours. During hot or humid conditions, the pot life will decrease. Only mix the amount of material that can be used within two hours. Do not add thinner or water to attempt to compensate for coatings beyond useful pot life.

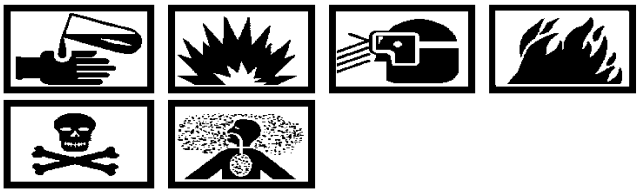

Primer Coating, Epoxy, Waterborne
MIL-PRF-85582 **61**

(a) Apply one coat of Waterborne Epoxy Primer Coating, MIL-PRF-85582, to repair area. Allow to air dry for a minimum of two hours. The total dry film thickness of the applied primer coating shall be 0.6 to 0.9 mils. Primer coating must be continuous, uniform, and free from bubbles, pinholes, runs, sags, and other surface imperfections.

CAUTION

Do not apply topcoat unless the primer coating is tack free.

(2) Polyurethane Coating, MIL-PRF-85285, is supplied as a two component kit which requires mixing. Consult manufacturer's instructions for proper mixing procedures.

NOTE

In general, the pot life of polyurethane topcoat is four hours. During hot or humid conditions, the pot life will decrease. Only mix the amount of material that can be used within two hours. Do not add thinner to attempt to compensate for coatings beyond useful pot life

Polyurethane Coating MIL-PRF-85285, 38

(a) Apply a light mist coat of Polyurethane Coating, MIL-PRF-85285, to repair area and allow to set thirty to sixty minutes.

(b) Apply a second coat of Polyurethane Coating, MIL-PRF-85285, to repair area. Allow to dry. The total dry film thickness of the applied coating shall be 1.7 to 2.3 mils.

i. If using High Solids Epoxy Primer, MIL-PRF-23377, and Polyurethane Coating, MIL-PRF-85285, apply as follows:

CAUTION

Never mix materials from different manufacturers.

(1) High Solids Epoxy Primer, MIL-PRF-23377, is supplied as a two component kit which requires mixing. Consult manufacturer's instructions for proper mixing procedures. Allow the mixed primer coating to stand for approximately thirty minutes prior to application.

NOTE

In general, the pot life of epoxy primer coating is four hours. During hot or humid conditions, the pot life will decrease. Only mix the amount of material that can be used within two hours. Do not add thinner to attempt to compensate for coatings beyond useful pot life

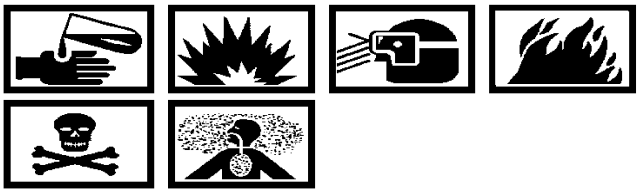

High Solids Epoxy Primer MIL-PRF-23377 15

(a) Apply one coat of High Solids Epoxy Primer, MIL-PRF-23377, to repair area. Allow to air dry for a minimum of two hours. The total dry film thickness of the applied primer shall be 0.6 to 0.9 mils. Primer coating must be continuous, uniform, and free from bubbles, pinholes, runs, sags, and other surface imperfections.

CAUTION

Do not apply topcoat unless the primer coating is tack free.

(2) Polyurethane Coating, MIL-PRF-85285, is supplied as a two component kit which requires mixing. Consult manufacturer's instructions for proper mixing procedures.

NOTE

In general, the pot life of polyurethane topcoat is four hours. During hot or humid conditions, the pot life will decrease. Only mix the amount of material that can be used within two hours. Do not add thinner to attempt to compensate for coatings beyond useful pot life

Polyurethane Coating MIL-PRF-85285, 38

(a) Apply a light mist coat of Polyurethane Coating, MIL-PRF-85285, to repair area and allow to set thirty to sixty minutes.

(b) Apply a second coat of Polyurethane Coating, MIL-PRF-85285, to repair area. Allow to dry. The total dry film thickness of the applied coating shall be 1.7 to 2.3 mils.

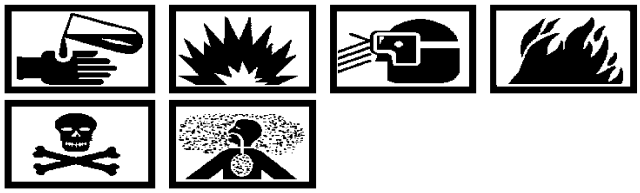

Sealing Compound, (Buna-N)
MIL-S-4383 **46**

j. Apply, by brush, a thin coat of sealing compound (Buna-N) MIL-S-4383 to leading edges of struts from hub to rim and for at least 1.0 in. rearward.

k. Let coating air dry for 20-30 minutes.

l. Apply at least two coats of chemical conversion coating. Apply additional coats if time permits.

14. **COMPRESSOR AIR INLET VANE ASSEMBLY INSPECTION**.

Support Equipment Required

Part No./Type Designation	Nomenclature
53713	Stone, Arkansas

Materials Required

Specification No./Part No.	Nomenclature
H-B-178	Brush, Hog bristle or heavy fiber
MIL-A-4864	Wool, aluminum

NOTE

Damaged inlet vanes are generally not repairable due to the thin hollow sheet metal structure of the vanes. The trailing edge is double thickness sheet metal welded together and therefore can be straightened and blended within defined limits.

Fluorescent penetrant inspected (FPI) parts with linear indications or cracks are not acceptable.

a. Refer to table 1, for acceptable conditions and rework limits.

15. **COMPRESSOR AIR BLEED COLLECTORS.**

Materials Required

Specification No./Part No.	Nomenclature
AMS5782 or AMS5784	Rod, welding

a. See table 2 for inspection and repair of collectors.

16. **DIFFUSER ASSEMBLY INSPECTION AND REPAIR.**

Materials Required

Specification No./Part No.	Nomenclature
AMS5782 or AMS5784	Rod, welding

NOTE

Refer to table 3, for inspection and repair limits of the upper and lower sprayshield baffle and baffle ring.

a. Cracks extending from the outer end attaching weld seam into a radial strut (2, figure 3) shall be stopdrilled at inner end of crack, blended, and repair welded. Remove a minimum of stock in preparation for welding. Weld as specified in preceding step.

b. Porosity, laps, and globular voids are acceptable in the welds when positively identified as such.

c. Smooth up any minor damage to machined surfaces to remove burrs or roughness.

d. Check and ensure that diffuser sump area is clean and free of all carbon deposits.

e. Cracks which exceed 0.625 in. in length, in radial strut weld seam at outer rim of diffuser (1, figure 3) shall be blended out and welded. Use AMS 5782 or AMS 5784 weld rod. The notch in strut trailing edge fairing may be enlarged to facilitate welding. Cool the weld in still air. Weld seam cracks of less than 0.625 in. are acceptable without weld repair.

17. **COMPRESSOR OUTLET VANE INSPECTION**

a. Replace vane assembly when the following conditions exist:

(1) Transverse crack indications on the vanes.

(2) Inner or outer ring cracks.

18. **COMPRESSOR REAR BEARING AND SEAL INSPECTION.** See table 4 for inspection of the compressor rear bearing primary and secondary stator and rotating seals.

a. A combination wear of 0.002 in. is acceptable on face of outer ring of bearing and mating surface of secondary labyrinth seal.

b. Inspect primary and secondary labyrinth seals for wear. Replace seals if wear is evident.

c. Damaged labyrinth seal lips shall be blended to remove sharp edges.

d. If inside diameter of compressor rear bearing inner ring exceeds 2.3616 in., replace the bearing.

19. **COMPRESSOR FRONT AND REAR BEARING LOCKING KEYS INSPECTION.**

a. Keys fretted or worn shall be replaced.

20. **COMPRESSOR SHAFT COUPLING INSPECTION.**

a. Replace coupling if any of the following conditions are found:

(1) Abnormal spline wear.

(2) Crack indications extending into root corners or breaking edges of spline teeth.

(3) Spalling on spline teeth.

(4) Scuffing on spline teeth, if metal pickup or pileup cannot be removed by light stoning.

21. **COMPRESSOR REAR BEARING OIL JET INSPECTION.**

Support Equipment Required

Part No./Type Designation	Nomenclature
No. 47	Drill bit

a. Reject an oil jet if ID exceeds 0.504 in.

b. A plugged jet orifice is not allowed. Clean it. Use a No. 47 size drill (0.0785 in.). Hand ream; do not drill into jet nozzle housing. The larger 0.310/0.317 and 0.499/0.501 diameter holes can be cleaned with a small brush or cloth.

Table 1. Compressor Air Inlet Vane Assembly (Sheet 1 of 2)

Condition	Serviceable Limits	Repairable Limits	Disposition
Nicks, cracks or tears on trailing edge of vanes.	None	0.060 in. or less is cause for repair	Rework by blending. Replace if repairable limit is exceeded.
Dents (vanes): Leading edge, and trailing edge.	0.030 in. max depth, with no sharp edges.	0.030 in. max depth.	Stone with an Arkansas stone protruding materials on contour surfaces. Replace assembly exceeding serviceable limits.
Cracks:			
Across inner and outer band horizontally.	None	None	Replace vane assembly.
Inner band vertical flanges.	Does not exceed the full depth.	None	Replace vane assembly when cracked across the full depth.
Inner and outer band be tween vanes (circumfer-entially).	One crack between vanes affecting no more than three adjacent vanes; two such conditions permitted per assembly.	None	Replace vane assembly.
Inner and outer band at splitline (circumferenti-ally).	None	None	Replace vane assembly.
Loose vanes.	No looseness allowed on all stainless steel guide vane assembly No. 6873624, identified by 0.087-0.093 in. diameter holes through concave side of vanes - one near inner band one near outer band.	None	Replace vane assembly.
Damage to trailing edge.	Up to 0.120 in. in from trailing edge.	Up to 0.120 in. in from trailing edge.	Reform original trailing edge contour with smooth faced pliers. Blend as required to remove damage. Blend no more than 0.60 in. from cord width. No straightening or blending within 0.100 in. of braze fillet at inner band of vane. However, straighten and blend at outer band if braze joint has no cracks or damage. FPI repaired vanes.
Plugged or closed slots in vane trailing edge.	None	Any closed slot.	Open slots with a knife or similar instrument, use care to avoid cracking the material or brazed joints between slots. Form to maintain original slot size and vane contour.

Table 1. Compressor Air Inlet Vane Assembly (Sheet 2)

Condition	Serviceable Limits	Repairable Limits	Disposition
Separation of brazed joint at vane trailing edge.	Joints may separate providing no two adjacent joints show separation and no crack or damaged in the area.	No repair.	Replace vane assembly.
Wear of the 0.193 in. hole in the guide vane back-up plates.	No elongation permitted.	Any elongated hole.	Replace vane.

Table 2. Compressor Air Bleed Collectors Inspection

Condition	Serviceable Limits	Repairable Limits	Disposition
Dents.	Maximum depth of 0.500 in.	Exceeds serviceable limit.	Straighten to original configuration using adequate back-up tools to prevent stretching the metal.
Cracks.			
Welds or metal.	None	Any Crack.	Weld repair using inert gas arc with AMS 5782 or AMS 5784 weld rod. Do not grind off finish weld unless an obstruction with an adjacent or mating part exists.
Bleed valve mounting area.	None	Any crack.	Repair in accordance with figure 2.
Rear mounting flange.	Any number of cracks, providing they do not converge, which might allow a piece to break out, or allow an air flow across a fire warning sensing switch, fuel line or an electrical harness.	Exceeds serviceable limits.	Weld repair with AMS 5782 or 5784 weld rod.
Missing inner baffle, tenth stage.	Baffle may be missing as long as bleed air does not flow across a fire warning sensing switch, fuel line or electrical harness, or compressor surge is not experienced.	No repair.	Replace air bleed collector.

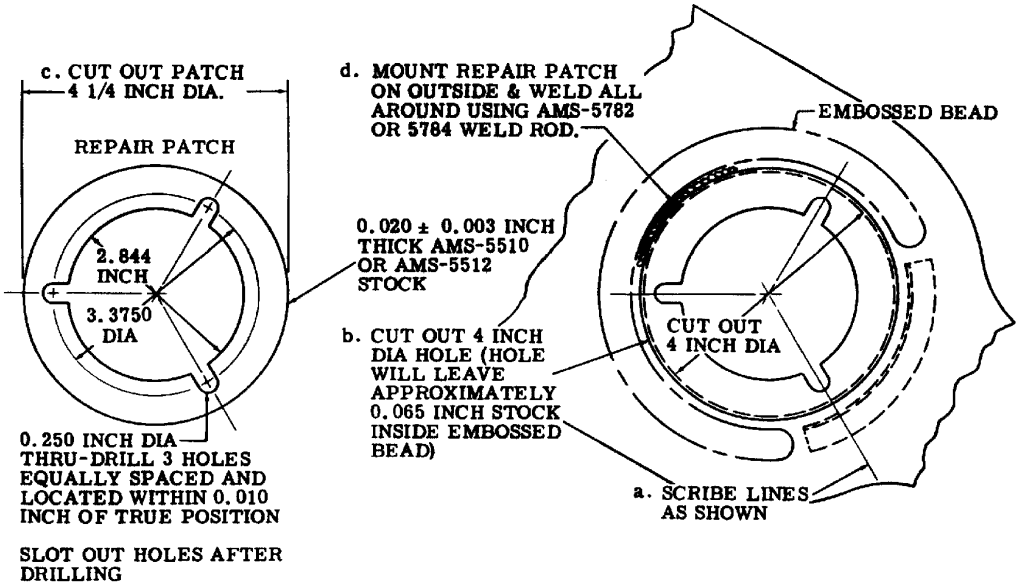

a. Scribe three lines to mark location of hole slots as shown.
b. Cut out damaged area to four inches diameter. If all crack indications are not removed, weld cracks and dress smooth with surface.
c. Fabricate a repair patch as shown. Trim patch as required to avoid interference with embossed bead. Patch must lay completely flat on mating surface.
d. Weld patch in position, aligning holes in patch with scribe lines. Use suitable copper chilling blocks to keep warpage at a minimum. After welding, clean part and inspect for crack indications. Reweld as necessary.

Figure 2. Compressor Air Bleed Collector Weld Repair

Table 3. Upper and Lower Sprayshield Baffle and Baffle Ring

Condition	Serviceable Limits	Repairable Limits	Disposition
Cracks.	No cracks acceptable.	Any cracking.	Weld repair cracks in the single ply area by inert gas arc, IAW NA 01-1A-34, parent material is AMS 5515 or AMS 5513. No heat treatment is necessary and grind weld bead, front and rear, flush with parent surface.
Worn areas.	Light normal wear which is not through one ply of the doubler.	Exceeds serviceable limits.	Reject.
Worn flange.	50 percent of original wall thickness remaining.	Exceeds serviceable limits.	Reject.
Worn in diffuser-combustion outer case mating area.	Exceeds one half part thickness or maximum radius of 9.642 in.	Exceeds serviceable limits.	Reject.
Damaged or missing lug nuts.	No damage or missing lug nuts.	Any damaged or missing lug nuts.	Install replacement lug nuts per assembly print.
Fretting on forward face of 19.156 in. ID hole.	25 percent of material thickness.	Exceeds serviceable limits.	Return to Depot for repair.

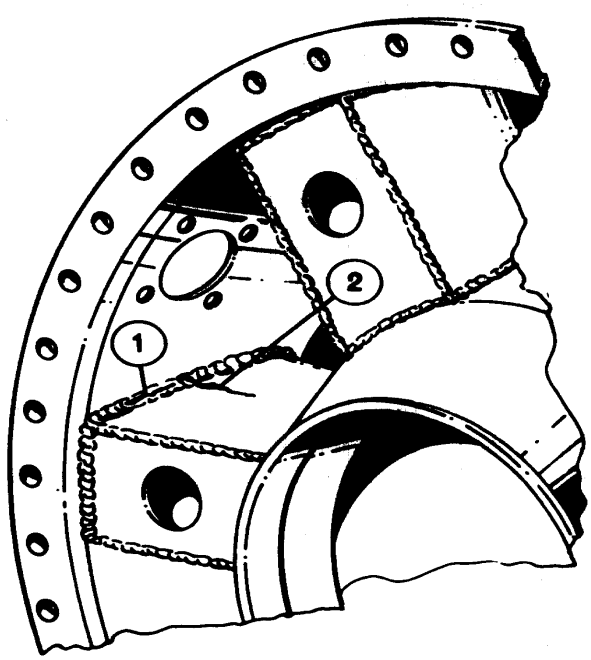

Figure 3. Diffuser Radial Strut Crack Limits

22. **COMPRESSOR FRONT BEARING OIL SEAL INSPECTION.**

a. If seal leaks as determined by oil inside the inlet housing, replace it.

b. If seal assembly is removed for reasons other than leaking, inspect components for damage as follows:

(1) Faulty wear pattern is not acceptable.

(2) Damage to sealing surfaces in excess of 0.005 in. in carbon seals is not acceptable.

(3) Damage to sealing surfaces in excess of 0.007 in. in depth on labyrinth seals is not acceptable.

(4) Chipped edges are acceptable on carbon seals provided a minimum of 0.050 in. of seal face width is intact.

(5) Cracks, grooves and scratches in carbon seal follower is not acceptable.

23. **BEARING SERVICING.**

a. Refer to NAVAIR 01-1A-503 and standard practices (WP 013 00) for bearing cleaning and inspection criteria.

NOTE

Inspection of bearings shall be performed only by experienced personnel and/or under supervision of experienced personnel.

b. Visually inspect for galling, flaking, corrosion, spalling, cracks, discoloration from stains or overheating and any other obvious damage. None are allowed.

Table 4. Compressor Rear Bearing Primary and Secondary Stator and Rotating Seals Inspection

Condition	Max. Serviceable Limit	Max. Repairable Limit	Corrective Action
1. Primary and Secondary Rotating Air Seals for:			
a. Nicks, Dents or Scratches on Seal Diameters.	Maximum depth of defect of .010 inch allowed. Total circumferential length of damage shall not exceed 1/4 inch per seal diameter or 1.0 inch total. Defects shall be staggered.	Sharp edges and metal build up.	Remove sharp edges and metal build up by blending.
b. Excessive wear at knife edges (evidenced by severe flattening/ smearing of knife edges).	Not Allowed.	Not Repairable.	Reject Seal.
c. Inside Diameter:			
Primary Seal	2.365 Inch Maximum.	Not Repairable.	Reject Seal.
Secondary Seal	2.365 Inch Maximum.	Not Repairable.	Reject Seal.
2. Primary and Secondary Stator Seals for:			
a. Wear on sealing surfaces.	Minor Burnishing.	Not Repairable.	Reject Seal.
3. Secondary Stator Seal for fretting on mating surface with OD of bearing	65% of surface not damaged.	Not Repairable.	Polish to remove buildup and roughness.

INTERMEDIATE MAINTENANCE

ASSEMBLY

COMPRESSOR ASSEMBLY

Reference Material

Standard Practices - Assembly and Disassembly . . . . . WP 016 00
Accessory Drive Housing Assembly - Removal and Installation . . . . . WP 029 00
Combustion Chamber Outer Casing Assembly, Combustion Liner Assemblies, and Turbine Coupling Shaft Assembly - Removal and Installation . . . . . WP 031 00
Dual Element Fuel Pump Assembly - Maintenance . . . . . WP 058 00
Fuel Control Assembly - Maintenance . . . . . WP 064 00
Solenoid-Manifold Drain Valve Assembly - Maintenance . . . . . WP 066 00
Fuel Nozzle Assemblies - Maintenance . . . . . WP 067 00
(Power Section) External Scavenge Oil Pump Assembly - Maintenance . . . . . WP 078 00
Power Section Wiring Harness Assemblies - Removal and Installation . . . . . WP 081 00
Ignition Exciter Assembly - Maintenance . . . . . WP 082 00
Ignition Relay - Maintenance . . . . . WP 084 00
Bleed Air Valve Assemblies - Maintenance . . . . . WP 089 00
Compressor Bleed Air Filter Assembly - Maintenance . . . . . WP 090 00
Anti-icing Solenoid Valve Assembly - Maintenance . . . . . WP 091 00
Anti-icing Air Valve Assembly - Removal and Installation . . . . . WP 092 00
Engine Monitoring System Components - Maintenance . . . . . WP 094 00
External Tubing, Cabling, and Clamping Supplement Manual . . . . . NAVAIR 02B-5DG-6-1-1

Alphabetical Index

Subject	Page No.
Compressor Assembly - Assembly	3
Anti-icing Air Distribution Tubes Installation	13
Compressor Air Inlet Anti-icing Vane Installation	11
Compressor Air Inlet Housing Attachments Installation	12
Compressor Air Inlet Housing Installation	12
Compressor Casing - Assembly	21

Alphabetical Index (cont)

Subject	Page No.
Compressor Casing Installation	10
Compressor Extension Shaft – Assembly	22
Compressor Extension Shaft Backlash Check	25
Compressor Extension Shaft Installation	23
Compressor Extension Shaft Shim Calculation	23
Compressor Front Bearing Outer Race and Rollers Installation	10
Compressor Front Labyrinth Seals Installation	8
Compressor Rear Bearing and Labyrinth Seals Installation	3
Compressor Rotor Installation	7
Compressor Rotor to Vane Axial Clearance Check	16
Compressor Shaft Coupling Installation	21
Compressor Side Gear and Bearing Installation	21
Compressor 14th Stage Vane Installation	3
Cyclone Breather Installation	11
External Components Installation	26
Fuel Nozzles Installation	3
General Procedures	3
Reduction Gear to Power Section Strut Fittings Installation	13
Torquing the Compressor Rear Bearing Nut	26
Total Compressor Rotor Axial Clearance Checks	16

Record of Applicable Technical Directives

None

1. **COMPRESSOR ASSEMBLY – ASSEMBLY.**

2. **GENERAL PROCEDURES.**

Materials Required

Specification No./Part No.	Nomenclature
NS165	Compound, Anti–seize
MIL–PRF–23699	Oil, lubricating

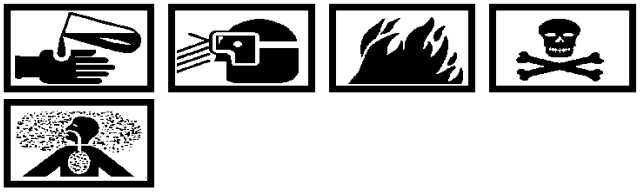

Anti–seize Compound (Never Seez) NS165 32

a. Apply NS165 to threads on all external fasteners (screws, bolts and studs).

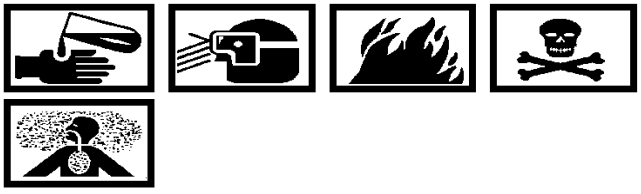

Lubricating Oil, MIL–PRF–23699 2

b. Apply MIL–PRF–23699 oil to all internal fasteners (screws, bolts, and studs) and bearings, bearing retainer nuts, shaft splines, and preformed packings.

c. Using approved support equipment, assemble the compressor in a vertical position. Build the compressor from the rear to the front using parts, procedures, and instructions covered in this work package (WP) or referenced material.

d. Observe all applicable warnings, cautions, and notes.

3. **FUEL NOZZLES INSTALLATION.**

a. Place diffuser (13, figure 1) on a workbench with the front end down.

b. Install fuel nozzles (WP 067 00).

4. **COMPRESSOR 14TH STAGE VANE INSTALLATION.**

Support Equipment Required

Part No./Type Designation	Nomenclature
6795905	Stand, engine component turnover
6796819	Adapter, attaching
6796847	Adapter, attaching

a. Attach 6796819 adapter to rear flange of diffuser (13, figure 1) and attach 6796847 adapter to the 6795905 turnover stand.

b. Install 14th stage vane (2) in diffuser by engaging outer ring slots in diffuser pins.

c. Ensure 14th stage vane is properly seated.

5. **COMPRESSOR REAR BEARING AND LABYRINTH SEAL INSTALLATION.**

Support Equipment Required

Part No./Type Designation	Nomenclature
3855	Wrench, compressor rear bearing nut
23055343	Gage, bearing end play checking
6796540	Adapter, lifting (use with 6796833–201)
6796833	Stand, compressor rotor transportation and storage
6796833–201	Adapter, assembly
6796833–202	Assembly, lifting eye
––	Micrometer (0–1 in.)
––	Micrometer (1–2 in.)

Materials Required

Specification No./Part No.	Nomenclature
MIL–PRF–23699	Oil, lubricating

CAUTION

14th stage balance weights must be secure or damage to the engine will occur.

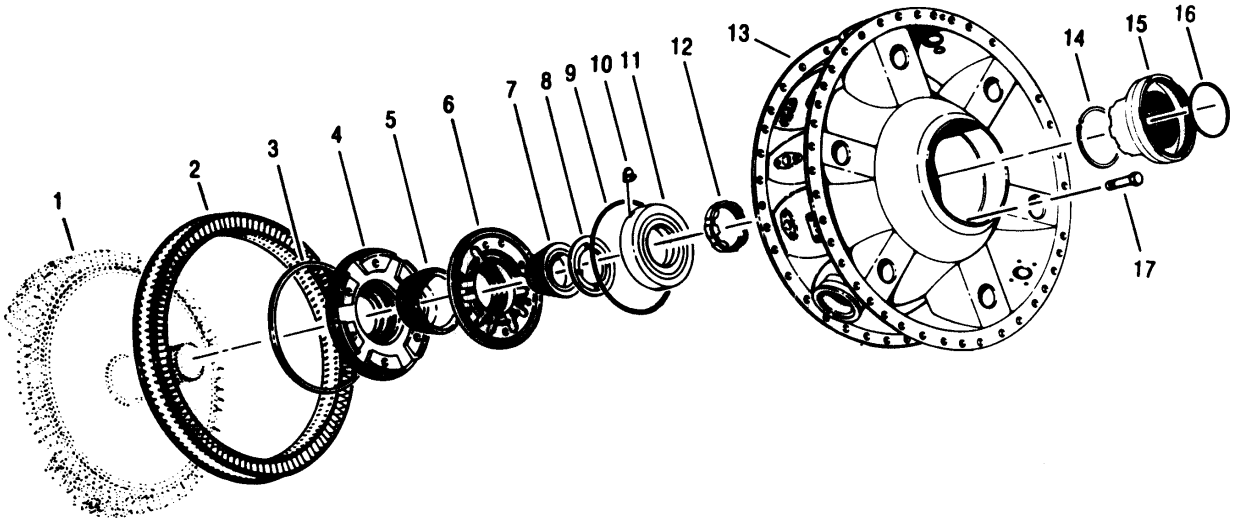

1. Compressor Rotor
2. Compressor 14th Stage Vane
3. (Square Metal) Ring
4. Primary Stator Labyrinth Seal
5. Primary Rotating Labyrinth Seal
6. Secondary Stator Labyrinth Seal
7. Secondary Rotating Labyrinth Seal
8. Compressor Rear Bearing Seal Flange
9. Metal Gasket
10. Compressor Rear Bearing Locking Key
11. Compressor Rear Bearing
12. Compressor Rear Bearing Nut
13. Compressor Diffuser
14. Coupling Retaining Ring
15. Compressor Shaft Coupling
16. (Oil Dam) Internal Retaining Ring
17. Bolt (3)

Figure 1. Compressor 14th Stage Vane, Rear Bearing, Labyrinth Seals, and Diffuser Details

a. If installed, ensure the balance weights are secure on the rim of the 14th stage compressor wheel. If balance weights are not secure, reject the compressor rotor to depot level maintenance. (QA)

b. Remove the rotor from the 6796833 stand by attaching the hoist to the 6796833-202 lifting eye assembly. (See figure 2.)

c. Remove 6796540 lifting adapter and place the rotor in the bottom center of 6796833 stand, supported on the 6796833-201 assembly adapter.

d. Remove 6796833-202 lifting eye assembly from the rotor. (QA)

NOTE

Free state measurements are taken before compressor rear seal and bearing members are installed. These measurements are used for comparison after installation.

e. Using micrometers and 23055343 gage, measure and record free state lengths of compressor rear seal and bearing members. Use figure 3 and table 1 as guides. (QA)

f. Install square metal ring (3, figure 1) on primary stator labyrinth seal (4).

g. Install the following compressor rear seal and bearing members on the rotor 14th stage compressor wheel:

(1) Install primary stator labyrinth seal (4).

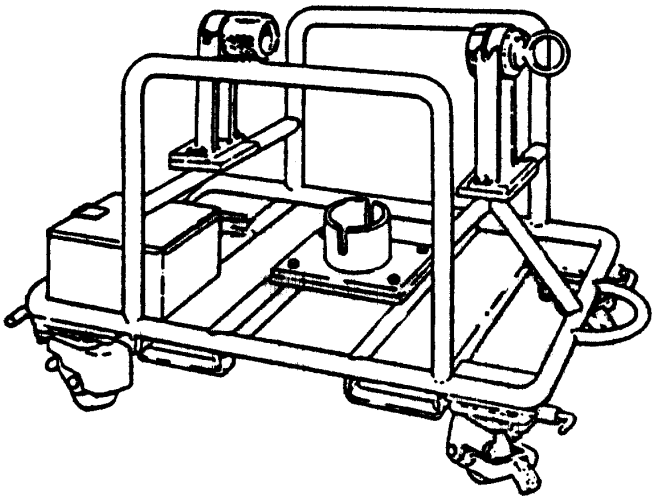

Figure 2. 6796833 Compressor Rotor Transportation and Storage Stand

Table 1. Compressor Rotor Axial Travel

A. Compressor Rear Bearing Outer Race Fit and Clearance	**Limits (in.)**	**Measured (in.)**
Ball Assembly Cage Width	0.8671 ± 0.0015	
Bearing Outer Race Width	0.8651 ± 0.0100	
Axial Looseness	0.001T to 0.006L	
B. Compressor Rear Bearing Axial End Play	–––––	
MRC Bearing P/N: 6846298	0.012 to 0.018	
New Departure–Hyatt Bearing P/N: 6846717	0.016 to 0.021	
Barden Bearing P/N: 6871643	0.012 to 0.019	
C. Compressor Rotor Axial Travel	–––––	
Calculated: A + B		
Measured:		
Difference: Measured Travel Not To Exceed Calculated Travel		

MEASUREMENT CALCULATIONS

*A. PRIMARY ROTATING LABYRINTH SEAL (FLANGE)		_____
*B. SECONDARY ROTATING LABYRINTH SEAL		_____
*C. COMPRESSOR REAR BEARING SEAL FLANGE		_____
*D. COMPRESSOR REAR BEARING (INNER RACE)		_____
*E. COMPRESSOR REAR BEARING NUT		_____
	TOTAL	_____
G. END OF COMPRESSOR ROTOR SHAFT TO COMPRESSOR REAR BEARING NUT	+	_____
	TOTAL LENGTH	_____
*F. END OF COMPRESSOR ROTOR SHAFT TO 14TH STAGE COMPRESSOR WHEEL	-	_____
	** DIFFERENCE	_____

* MEASURE BEFORE INSTALLATION (FREE STATE)
** DIFFERENCE MUST BE WITHIN 0.003 IN. OF FREE STATE MEASUREMENT

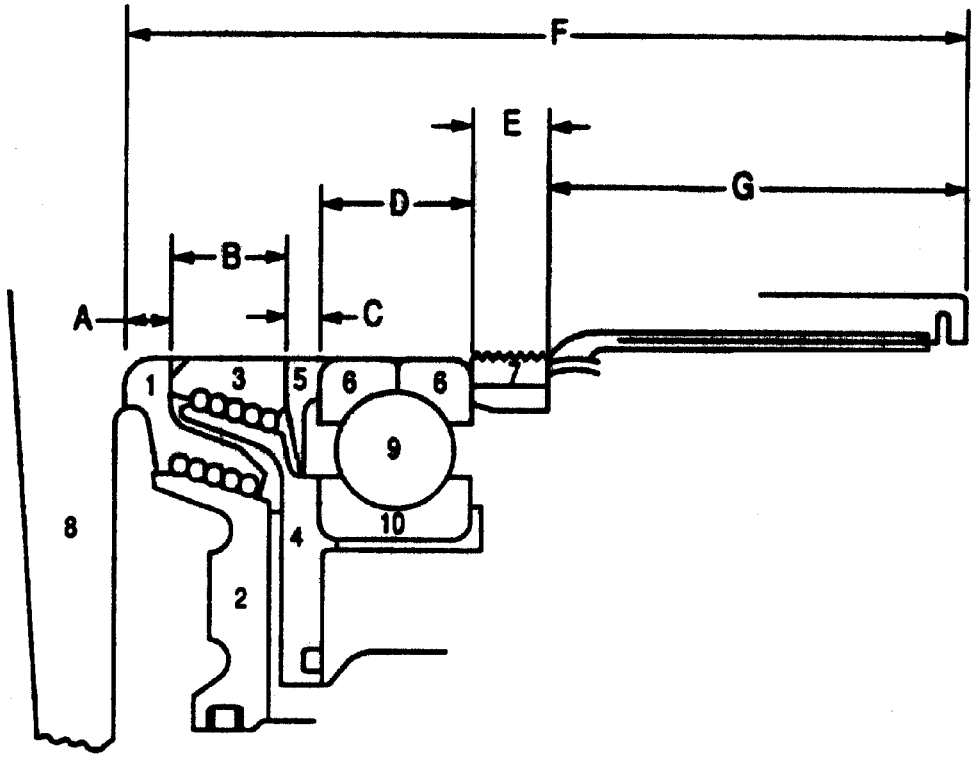

1. Primary Rotating Labyrinth Seal
2. Primary Stator Labyrinth Seal
3. Secondary Rotating Labyrinth Seal
4. Secondary Stator Labyrinth Seal
5. Compressor Rear Bearing Seal Flange
6. Compressor Rear Bearing (Inner Race)
7. Compressor Rear Bearing Nut
8. 14th Stage Compressor Wheel
9. Compressor Rear Bearing (Ball Assembly)
10. Compressor Rear Bearing (Outer Race)

Figure 3. Compressor Rear Seal and Bearing Stack Measurements

(2) Install primary rotating (knife) labyrinth seal (5).

(3) Install secondary stator labyrinth seal (6).

(4) Install secondary rotating (knife) labyrinth seal (7).

(5) Install compressor rear bearing seal flange (8).

WARNING

Heated parts will cause skin damage (burns). Use clean insulated gloves to handle parts.

h. Heat bearing (11) inner race halves to 300° F (149° C). Refer to WP 016 00.

NOTE

Bearing will be installed with the “o” marking on the inner and outer race on the same side and “o” facing forward.

i. Install the front half of the inner race, the outer race, and ball assembly with the locking key (10) in position with arrow pointing outward. Finally install the rear half of the inner race.

j. Install rear bearing nut (12) and tighten to temporarily seat the bearing and labyrinth seals using 3855 wrench.

k. Allow bearing temperature to stabilize and retighten rear bearing nut.

l. Measure labyrinth seal and bearing stack using micrometers, to ensure proper seating of the seals and bearing. (Use figure 3 as a guide.) (QA)

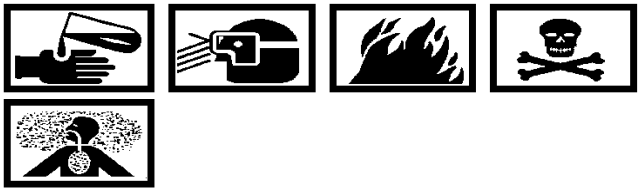

Lubricating Oil, MIL–PRF–23699 2

m. Apply MIL–PRF–23699 oil to bearing (11).

n. Install 6796833–202 lifting eye adapter and place rotor in 6796833 stand horizontally.

6. **COMPRESSOR ROTOR INSTALLATION.**

Support Equipment Required

Part No./Type Designation	Nomenclature
6795905	Stand, engine component turnover
6796169	Guide pin (2)
6796833–201	Adapter, assembly
6796833–202	Assembly, lifting eye
6796540	Adapter, lifting (Use with 6796833–201)

Materials Required

Specification No./Part No.	Nomenclature
SAE–AMS–M–7866	Molybdenum Disulfide
MIL–PRF–23699	Oil lubricating
MS9205–072	Gasket, metal

a. Install 6796540 lifting adapter on 6796833–201 adapter assembly and lift rotor from front.

b. Remove 6796833–202 lifting eye assembly.

c. Install metal gasket (9, figure 1) in secondary stator labyrinth seal (6) at rear of rotor.

Lubricating Oil, MIL–PRF–23699 2

d. Apply MIL–PRF–23699 oil to diffuser (13) bearing cage inside diameter.

e. Install 6796169 guide pins in secondary stator labyrinth seal (6).

f. Align the slots and position locking key (10) at the 11 o’clock position. (QA)

CAUTION

Compressor rear stator labyrinth seals are not secured. Movement during installation of compressor rotor may cause the rear bearing locking key to dislodge. This will cause rear bearing failure.

g. Carefully lower rotor into the diffuser using guide pins. Ensure rear bearing locking key (10) and metal gasket (9) remain in place. (See figure 4.)

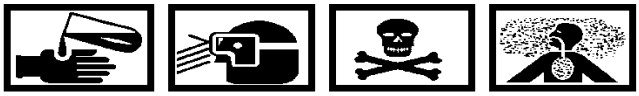

Molybdenum Disulfide Lubricant SAE–AMS–M–7866 **19**

Lubricating Oil, MIL–PRF–23699 **2**

h. Apply a mixture of SAE–AMS–M–7866 and MIL–PRF–23699 to bolts (17, figure 1) and install bolts through diffuser securing the primary stator labyrinth seal. Install bolts at the 2 o'clock, 3:30 and 9:30 positions. Snug tighten bolts.

i. Rotate compressor rotor to ensure freedom of movement

j. Remove 6796169 guide pins.

k. Remove 6796833–201 lifting adapter, from rotor.

l. If used, remove (shop slave) compressor 1st stage blade retainer from 1st stage compressor wheel.

m. Ensure (production) compressor 1st stage blade retainer is installed. (QA)

7. **COMPRESSOR FRONT LABYRINTH SEALS INSTALLATION.**

Support Equipment Required

Part No./Type Designation	Nomenclature
3464–4	Wrench, extension shaft
3464–5	Holder, wrench
–––	Wrench, torque (0–300 lb in.)

Materials Required

Specification No./Part No.	Nomenclature
AS3085–015	Packing, preformed
AS3085–161	Packing, preformed
6849499	Washer, key

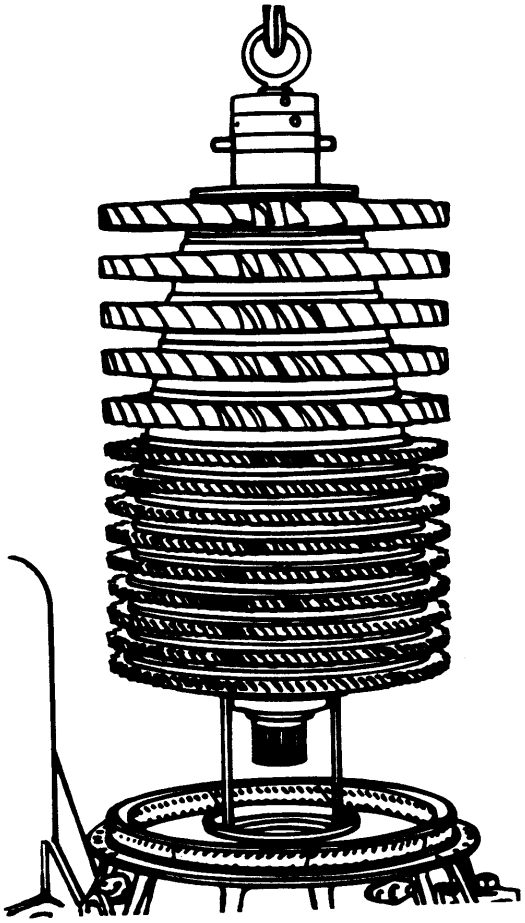

Figure 4. Installing Rotor Using 6796169 Guide Pins

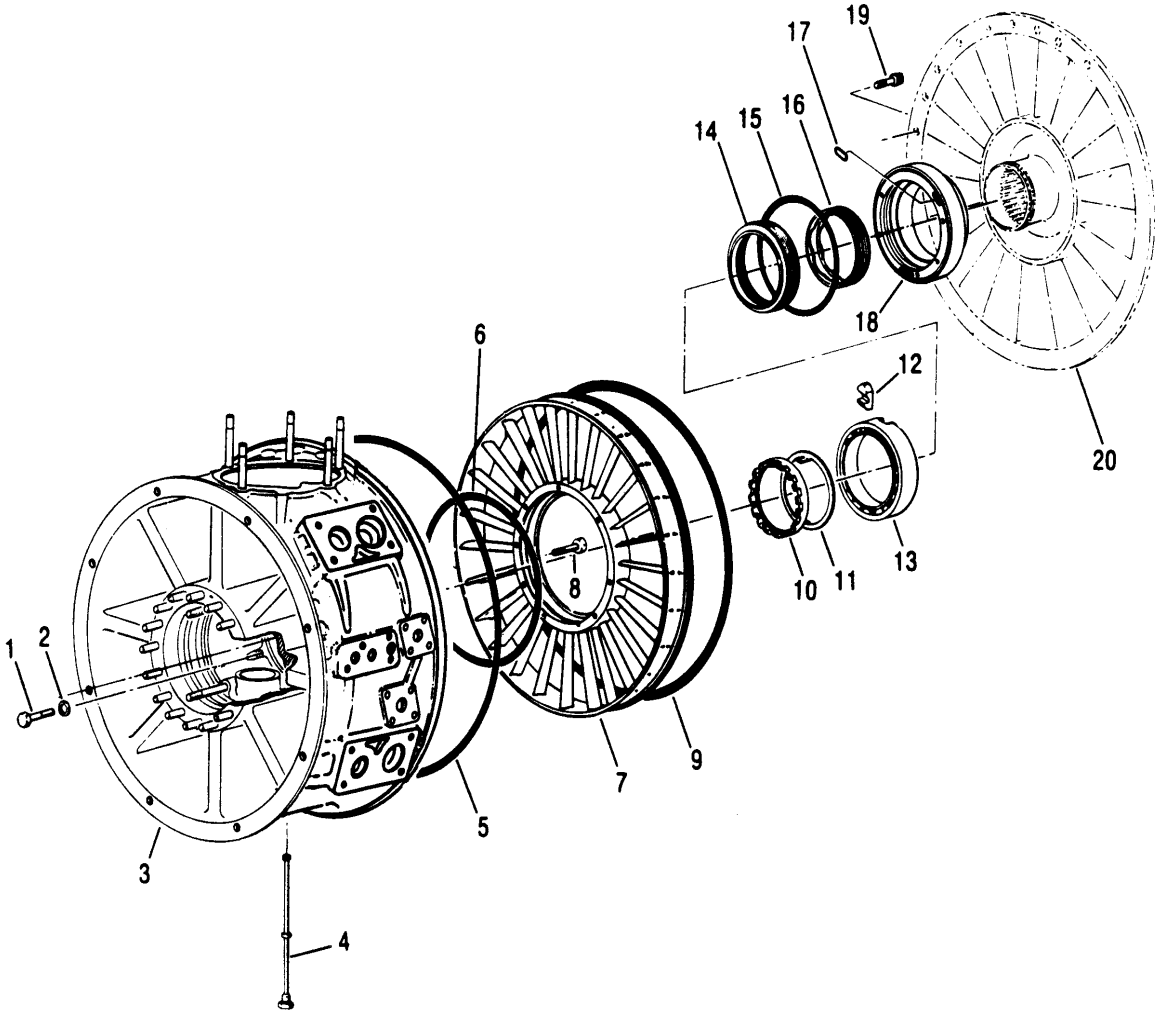

1. Bolt (4)
2. Washer (4)
3. Compressor Air Inlet Housing
4. Anti–icing Air Distribution Tubes (6)
5. Preformed Packing
6. Preformed Packing
7. Compressor Air Anti–icing Vane
8. Bolt (8)
9. Preformed Packing
10. Spanner Nut (LH Thread)
11. Key Washer
12. Compressor Bearing Key
13. Roller Bearing
14. Rotor Outer Labyrinth Seal
15. Preformed Packing
16. Rotor Inner Labyrinth Seal
17. Preformed Packing
18. Rotor Front Labyrinth Seal
19. Bolt (2)
20. Compressor Rotor

Figure 5. Compressor Air Inlet Housing Installation

a. Install rotor inner labyrinth seal (16, figure 5), rotor front labyrinth seal (18), and rotor outer labyrinth seal (14) at front shaft of rotor.

b. Install preformed packing (15) in outer face of front labyrinth seal and install preformed packing (17) in recess of vent slot.

WARNING

Heated parts will cause skin damage (burns). Use clean insulated gloves to handle parts.

c. Heat roller bearing (13) inner race to 300°F (149°C). Refer to WP 016 00.

d. Install the inner race on rotor shaft with serial number forward.

NOTE

Spanner nut (10) has left–hand threads.

e. Install key washer (11) and spanner nut (10).

f. Place 3464–4 wrench and 3464–5 holder over front compressor rotor shaft spline and snug tighten spanner nut (10).

g. Torque spanner nut to 200 lb ft. Loosen the nut and retorque between 90 to 180 lb ft until key washer locktab aligns with slot. (QA)

h. Bend only one locktab of key washer to engage slot in the spanner nut. (QA)

8. **COMPRESSOR FRONT BEARING OUTER RACE AND ROLLER INSTALLATION.**

Support Equipment Required

Part No./Type Designation	Nomenclature
6796901	Compressor, compressor front bearing outer race

a. Place roller bearing (13, figure 5) outer race and ball assembly in 6796901 compressor tool with the serial number facing forward.

b. Insert bearing key (12) in the labyrinth seal slot.

c. Install the outer race and rollers on compressor rotor front shaft.

d. Engage bearing key.

e. Remove 6796901 compressor tool.

9. **COMPRESSOR CASING INSTALLATION.**

Materials Required

Specification No./Part No.	Nomenclature
NS165	Compound, Anti–seize

Anti–seize Compound (Never Seez) NS165 32

a. Apply NS165 compound to all compressor splitline bolts.

b. Carefully place compressor casing halves on the diffuser splitline with the axial splitline flanges indexed at the 4:30 and 10:30 positions (viewed from the rear). Install with the top and bottom halves in the proper position marked on each case adjacent to the front flange.

c. Install one rear flange bolt and nut in each case half at the top and bottom locations on the vertical centerline of the engine.

NOTE

These bolt holes are the fifth (5th) hole from the two axial splitlines as measured counterclockwise. The case and diffuser holes are smaller to provide a close fit with the body of the bolt to help align cases.

d. Tighten nuts sufficiently to snug the casing to the diffuser.

10. **COMPRESSOR AIR INLET ANTI–ICING VANE INSTALLATION.**

Support Equipment Required

Part No./Type Designation	Nomenclature
–––	Wrench, torque (0–100 lb in.)

Materials Required

Specification No./Part No.	Nomenclature
AS3085–162	Packing, preformed
NS165	Compound, Anti–seize
VV–P–236	Lubricant, petrolatum
6877242–004	Packing
6877242–006	Packing

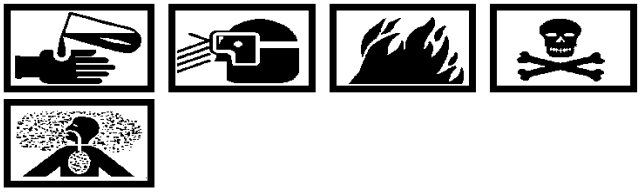

Petrolatum Lubricant VV–P–236 **33**

a. Using VV–P–236 lubricant, lubricate and install two packings (5 and 9, figure 5) in outer grooves of anti–icing vane (7).

b. Using VV–P–236 lubricant, lubricate and install two packing (6) in the inlet housing (3). This will seal the inner band.

c. Install anti–icing vane (7) in the inlet (3) housing and index the anti–icing vane to align the inner band holes with the inlet housing bolt bushings.

Anti–seize Compound (Never Seez) NS165 **32**

d. Apply NS165 compound to bolts (8).

e. Install bolts and secure anti–icing vane. Torque bolts 35–40 lb in. above drag torque. (QA)

11. **CYCLONE BREATHER INSTALLATION.**

Support Equipment Required

Part No./Type Designation	Nomenclature
–––	Wrench, torque (0–100 lb in.)

Materials Required

Specification No./Part No.	Nomenclature
AN763–20	Gasket
AS3084–12	Packing, preformed
NS165	Compound, Anti–seize
MS20995C32	Lockwire, 0.032 inch
Permatex No. 1372 or Loctite 20588	Sealant
23052088	Gasket, breather cover
6782828	Gasket, 2 bolt flange

Anti–seize Compound (Never Seez) NS165 **32**

a. Apply NS165 compound to threads of fittings before installing fittings on breather.

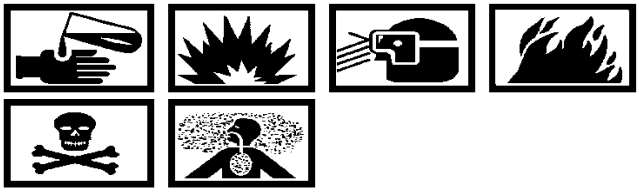

Sealing Compound Permatex No. 1372 or Loctite 30558 **34**

b. Apply Permatex No. 1372 or Loctite 30588 to inlet housing (1, figure 6) pad, gasket (2), and splitline between body (3) and cover (4).

c. Install 23052088 gasket (2), body (3), and cover (4) to inlet housing pad.

d. Install washers (5) and nuts (6) securing cover, body, and gasket. Torque nuts 35–40 lb in. above drag torque. (QA)

NOTE

To avoid interference, perform steps e thru h when compressor assembly is installed on the 6796784 engine overhaul stand.

e. Install AN763–20 gasket (7) and elbow (8) to top of cover and secure with washers (9) and nuts (10). Torque nuts 70–85 lb in. (QA)

f. Install 6782828 gasket (11) to body.

g. Install cover (12) and secure with two bolts (13). Lockwire bolts. (QA)

h. Install preformed packing (14), nut (15), and elbow (16) to front side of body.

12. **COMPRESSOR AIR INLET HOUSING ATTACHMENTS INSTALLATION.**

Support Equipment Required

Part No./Type Designation	Nomenclature
---	Wrench, torque (0–200 lb in.)

Materials Required

Specification No./Part No.	Nomenclature
AS3208–06	Packing
AS3085–010	Packing
NS165	Compound, Anti–seize
MIL–PRF–6081, grade 1010	Oil, lubricating
23008228	Gasket

NOTE

The inlet housing has self locking inserts.

a. Install gasket (12, figure 7) at the 3 o'clock position.

Anti–seize Compound (Never Seez) NS165 32

b. Apply NS165 compound to bolts (10) and secure plate (11). Torque bolts 74 – 89 lb. in. (QA)

c. Install the anti–icing air elbow (14) and gasket (13) at the forward port 9 o'clock position. Ensure elbow fitting faces forward.

Anti–seize Compound (Never Seez) NS165 32

d. Apply NS165 compound to bolts (15) and torque bolts 74 – 89 lb. in. (QA)

e. Install air sensing tip and 90° reducing elbow (WP 094 00).

f. Install compressor unit accelerometer (WP 094 00).

13. **COMPRESSOR AIR INLET HOUSING INSTALLATION.**

Support Equipment Required

Part No./Type Designation	Nomenclature
3762	Guide pin
---	Wrench, torque (0–100 lb in.)

Materials Required

Specification No./Part No.	Nomenclature
MIL–PRF–23699	Oil, lubricating
MS20995C32	Lockwire, 0.032 inch

a. Install two 3762 guide pins in rotor front labyrinth seal (18, figure 5).

b. Rotate rotor front labyrinth seal (18) so that preformed packing (17) is located at the 11 o'clock position.

c. Carefully place inlet housing (3) on the compressor casing splitline, engaging the guide pins and the outer race of the front bearing (13).

d. Install one bolt (19) through the inlet housing and casing splitline at a hole near the midpoint between the case axial flanges in each half. (See figure 9.)

e. Snug bolts enough to retain the inlet housing.

Lubricating Oil, MIL–PRF–23699 2

f. Apply MIL–PRF–23699 oil to four bolts (1, figure 5).

g. Install two bolts (1) and washers (2) in hub of inlet housing, securing rotor front labyrinth seal (18).

h. Remove two 3762 guide pins and install the other two bolts (1) and washers (2).

i. Torque four bolts (1) 70 – 85 lb. in. and lockwire. Lockwire sequence will be from the 10 to 7 o'clock and the 2 to 4 o'clock positions. (QA)

j. Install one bolt at each of the four corner locations in the axial flanges of the compressor casing. (See figure 8.)

k. Install bolts in the bottom casing front flange, one place each side adjacent to the axial flange. Snug these bolts. (See figure 9.)

l. Install bolts and nuts in the bottom casing rear flange at either the 1st or 2nd hole from the axial flange. Snug these bolts. (See figure 10.)

14. **ANTI–ICING AIR DISTRIBUTION TUBES INSTALLATION.**

Support Equipment Required

Part No./Type Designation	Nomenclature
–––	Wrench, torque (0–100 lb in.)

a. Install six anti–icing air distribution tubes (4, figure 5) in the leading edge passages in the vertical and the 45 degree strut locations.

b. Torque tubes 50 – 58 lb in. above drag torque. (QA)

15. **REDUCTION GEAR TO POWER SECTION STRUT FITTINGS INSTALLATION.**

Support Equipment Required

Part No./Type Designation	Nomenclature
–––	Wrench, torque (0–100 lb in.)
–––	Wrench, torque (0–300 lb in.)

Materials Required

Specification No./Part No.	Nomenclature
EC–776	Sealant
NS165	Compound, Anti–seize
MS20995C32	Lockwire, 0.032 inch

a. Assemble dowel (7, figure 7) to the strut fittings (8 and 9) using bolts (1). Tighten bolt finger tight, then back off one half turn.

b. Install the strut fittings (8 and 9) on each side of inlet housing.

c. Torque bolts (1) securing dowels 70 – 85 lb in. and lockwire. (QA)

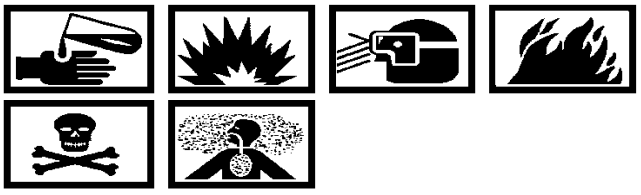

Sealing Compound Permatex No. 1372 or Loctite 30558 34

d. Apply NS165 compound to bolts (3 and 4) and secure right hand strut fitting (9) with three bolts (3) and one bolt (4). Torque 240 – 280 lb in. and lockwire.

e. Apply NS165 compound to the bolts (3, 5, and 6) and secure left hand strut fitting (8) with two bolts (3), one double ended bolt (5) and one double ended bolt (6). Torque bolts 240 – 280 lb in. and lockwire.

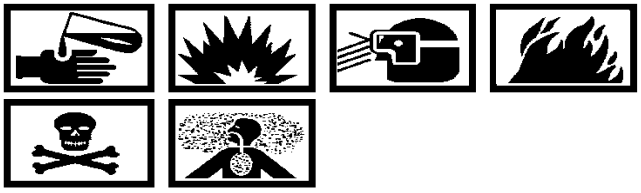

Sealant EC–776 48

f. Apply EC 776 sealant to the set screws (2) and install them in the strut fitting puller holes. Install screws flush, to 0.030 deep. (QA)

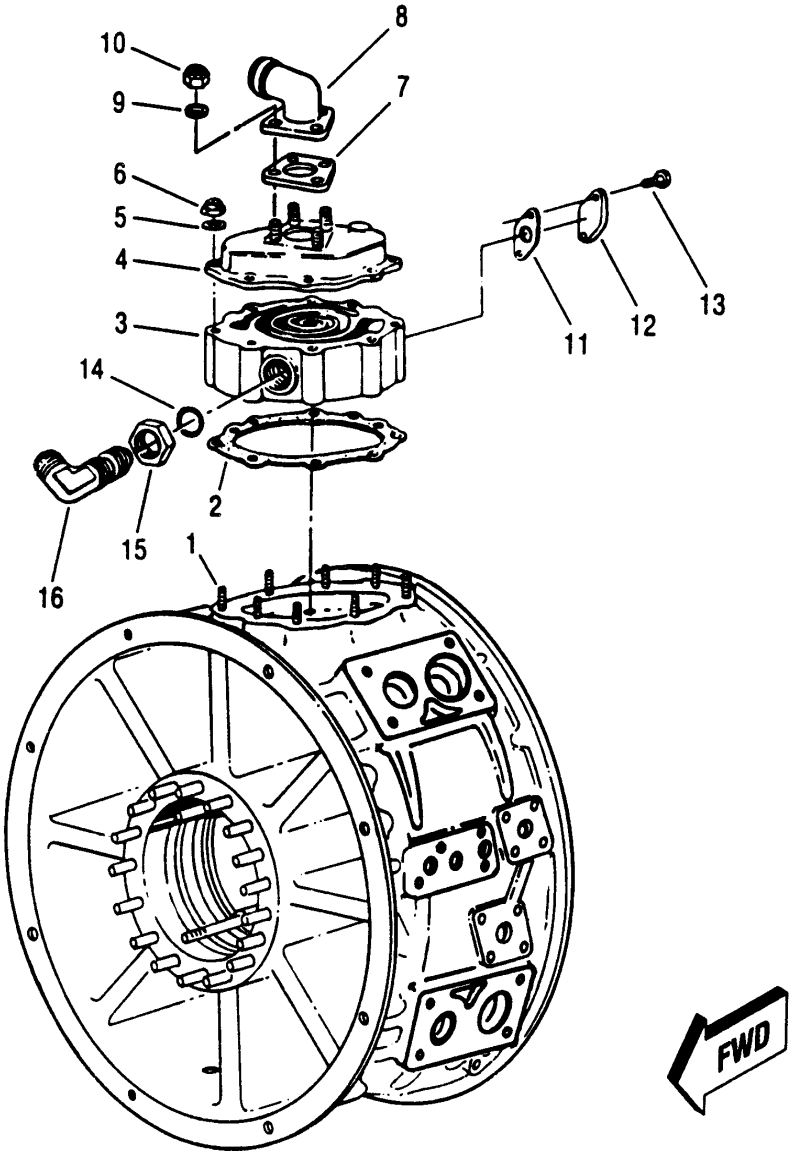

1. Compressor Air Inlet Housing
2. Gasket
3. Cyclone Breather Studding Body
4. Cyclone Breather Studding Cover
5. Washer
6. Self–locking Nut
7. Gasket
8. Elbow
9. Washer
10. Self–locking Nut
11. Gasket
12. Vent Port Cover
13. Bolt
14. Preformed Packing
15. Nut
16. Elbow

Figure 6. Cyclone Breather Installation

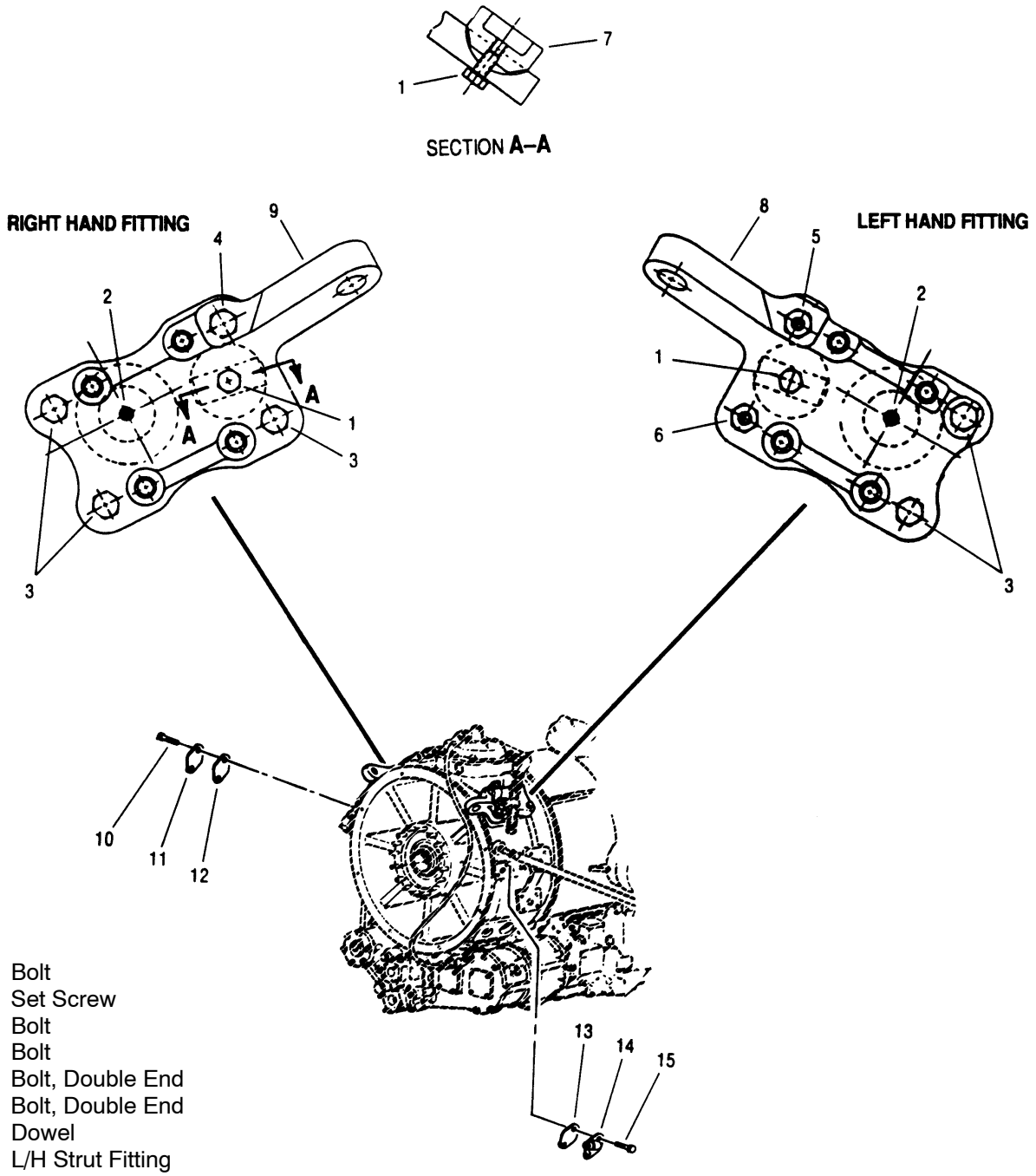

1. Bolt
2. Set Screw
3. Bolt
4. Bolt
5. Bolt, Double End
6. Bolt, Double End
7. Dowel
8. L/H Strut Fitting
9. R/H Strut Fitting
10. Bolt
11. Plate
12. Gasket
13. Gasket
14. Elbow
15. Bolt

Figure 7. Compressor Air Inlet Housing Attachments

16. **TOTAL COMPRESSOR ROTOR AXIAL CLEARANCE CHECKS.**

Support Equipment Required

Part No./Type Designation	Nomenclature
–––	Dial indicator

a. Measure the total axial compressor rotor travel as follows:

(1) Turn compressor to the vertical position with the inlet housing down.

(2) Secure dial indicator to diffuser and preload indicator on the rear bearing nut to 0.030 inch.

(3) Rotate compressor 180° and record measurement on indicator.

(4) Compare this measurement with the free state measurement obtained from the previous measurements on the parts prior to assembly. Ensure rotor axial movement is not greater than the free state measurement. (See figure 3.) (QA)

17. **COMPRESSOR ROTOR TO VANE AXIAL CLEARANCE CHECK.**

Support Equipment Required

Part No./Type Designation	Nomenclature
6796042–1	Gage, compressor rotor to vane assembly axial clearance, 0.040
6796042–3	Gage, compressor rotor to vane assembly axial clearance, 0.030
–––	Jackscrews (0.250–28 threaded bolts, 0.78 effective thread length)
–––	Wrench, torque (0–300 lb in.)

NOTE

This check must be accomplished on both case halves.

a. Rotate compressor to the vertical position.

b. Remove compressor casing axial splitline bolts and nuts.

c. Remove casing top half front and rear flange bolts.

d. Slightly loosen the inlet housing bottom splitline bolts to ease removal of the casing half.

e. Remove the casing half by using jackscrews (F, figure 8).

NOTE

Rear of vane minimum clearance may occur at either of two places of the vane inner band, so both positions must be checked. (See figure 11.)

f. Position the rotor in the aft most position and measure the clearance using gages 6796042–1 and –3, between the front of the vane band and the rear of the rotor for conformance to the specifications listed below. (See figure 11.) (QA)

Tolerances are as follows:

(1) Stages 1–8: 0.040 in. min.

(2) Stages 9–14: 0.030 in. min.

g. Move the rotor in the forward most position by carefully rotating the unit 180°. Measure the minimum axial clearance between the rear of the vane band and the front of the rotor for conformance to specification listed below. (QA)

Tolerance is as follows:

All stages 0.040 in. min.

h. Reinstall the top half of the casing. Secure the casing with four bolts and nuts in the axial flange corner locations. Torque 1/4–28 bolts 80–90 lb in. above drag torque. Torque 5/16 bolts 170–190 lb in. above drag torque. (QA)

i. Install three bolts in the front flange and torque bolts 130 – 150 lb in. above drag torque. (QA)

j. Install three bolts in the rear flange and torque 170 – 190 lb in. above drag torque. (QA)

k. Remove the axial splitline bolts and the front and rear flange bolts from the bottom casing half.

l. Carefully remove the bottom half of the casing and measure the front and rear vane minimum axial clearances in the same manner and steps as d. thru g. (QA)

m. If check fails, disassemble rear bearing stack (WP 047 00), recheck measurements, and reassemble.

n. Repeat compressor rotor to vane axial clearance check.

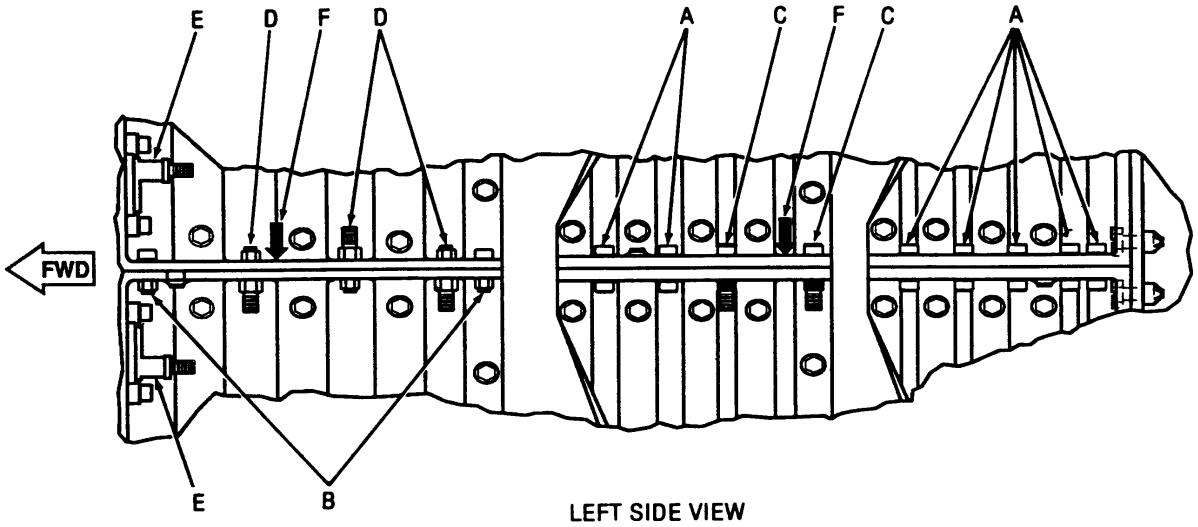

LEFT SIDE VIEW

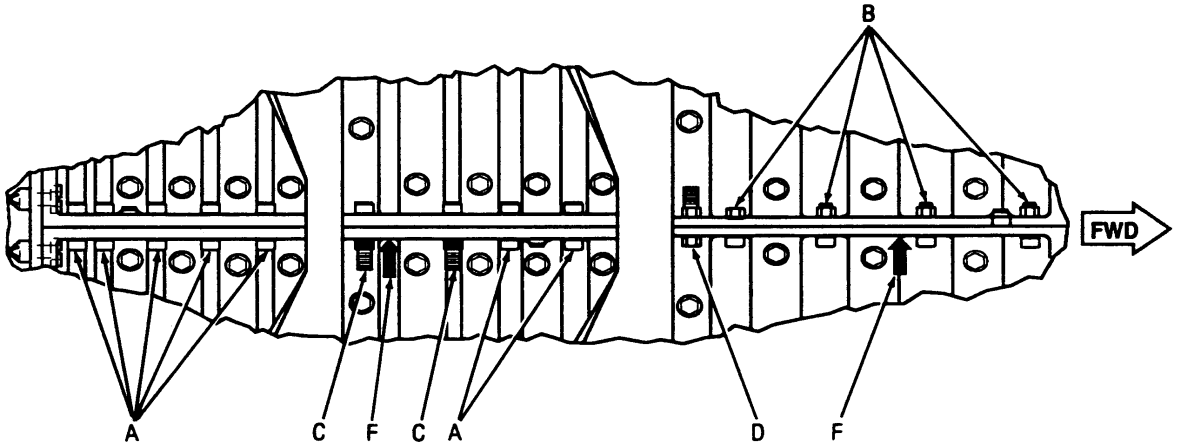

RIGHT SIDE VIEW

A=12 pt. hd. 5/16–24 X 1.00 inch with 12 pt 5/16 X 24 self–locking nut. Torque 170–190 lb in. above drag torque.

B=12 pt. hd. 1/4–28 X 3/4 inch, with hex head 1/4–28 nut. Torque 80–90 lb in. above drag torque.

C=stud, .250–28 X .3125–24 X 1.968 inch, with 12 pt. hd. self–locking nut. Torque 80–90 lb in. 190 lb in. above drag torque.

D=Stud, shld. and stepped .250–28 inch, w/ hex head 1/4–28 nut. Torque 80–90 lb in. above drag torque.

E=Adapter assembly, orient as shown

F=Jack screw holes.

Figure 8. Compressor Casing Axial Splitline Bolts

Dykem Layout Dye (various colors) 49

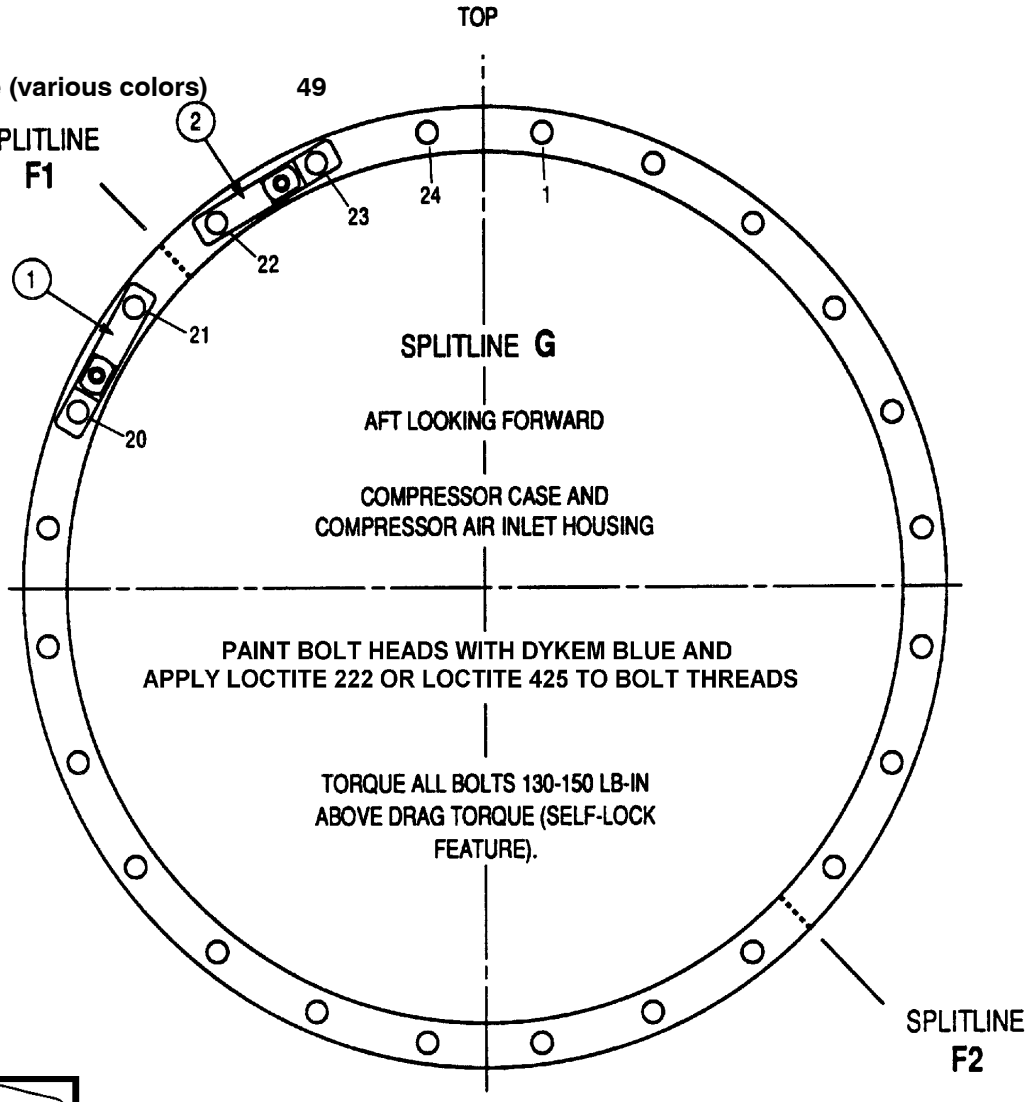

Thread Locking Compound MIL-S-46163
Type II Grade M 50

ADAPTER ITEM	PART NUMBER	ANGLE DIRECTION	REMARKS
1	23031164	—	PN MS9210-13 BOLT IN HOLES 20 AND 21. LOCATE ADAPTER WITH STUD TOWARD HOLE 20.
2	23031164	—	PN MS9210-13 BOLT IN HOLES 22 AND 23. LOCATE ADAPTER WITH STUD TOWARD HOLE 23.
NOTES : 1. USE PN MS9210-08 BOLT IN REMAINING HOLES.			

Figure 9. Compressor Front Flange Bolt Locations

Molybdenum Disulfide Lubricating Oil
DOD-L-25681

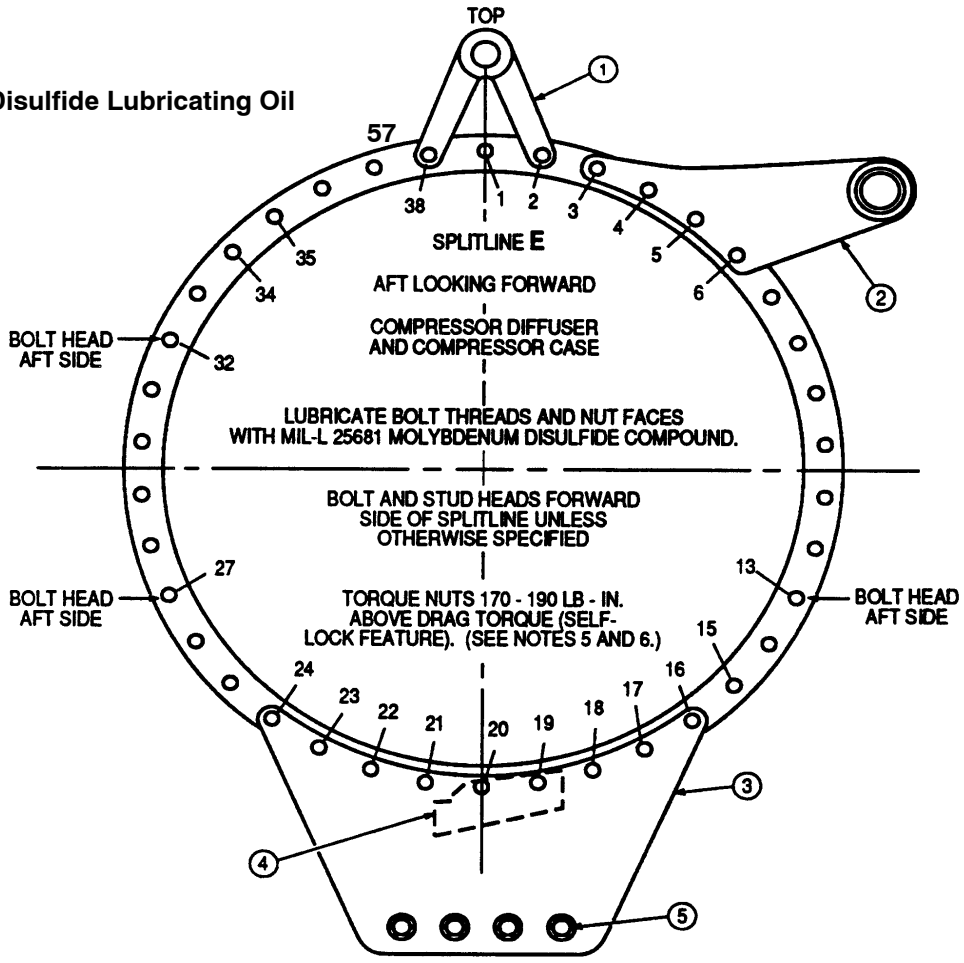

BRACKET ITEM	PART NUMBER	ANGLE DIRECTION	REMARKS
1	23007940		P/N6871521-13 BOLT IN HOLES 2 AND 38.
2	23035935	AFT	P/N6871521-14 BOLT IN HOLE 3 AND P N6871521-13 BOLT IN HOLES 4, 5, AND 6.
3	6829546	—	P N6871526-13 BOLT IN HOLE 16. P/N 6871521-13 BOLT IN HOLES 17, 18, 21, 23, AND 24. P/N 6871548 OR 23008218 SHOULDER STUD IN HOLES 19, 20, AND 22.
4	23036765	FWD	MOUNT ON STUDS AT HOLES 19 AND 20.
5	—	—	P/N6828763 BOLTS, 6706277 WASHERS, 6828769 OR 6818682-624 NUTS. LOCATE BOLT HEADS AFT SIDE

NOTES :
1. USE P/N6871521-11 BOLT IN HOLES 13, 27, AND 32. LOCATE HEADS AS SPECIFIED.
2. USE P/N 6871527 BOLT IN HOLES 15, 34, AND 35.
3. USE P/N6871521-11 BOLT IN REMAINING HOLES (17 PLACES).
4. USE P/N6784457-054 OR 6749294-524 NUT AT ALL LOCATIONS.
5. USE P/N MS21043-4 NUT ON STUDS AT HOLES 19 AND 20. TORQUE NUTS 74 - 89 LB-IN.
6. TORQUE P/N6828769 OR 6818682-624 NUT 265 - 300 LB-IN. (4 PLACES).

Figure 10. Compressor Rear Flange Bolt Locations

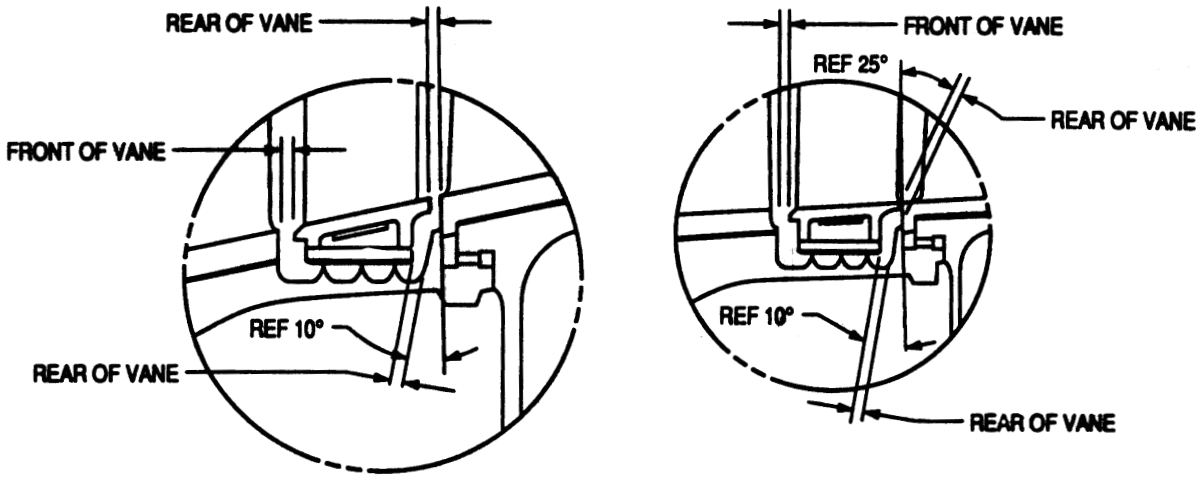

VANE STAGES 1 THRU 4

VANE STAGES 5 THRU 13

FRONT OF VANE ASSEMBLIES AND REAR OF ROTOR:

STAGES ONE THRU EIGHT – 0.040 MIN
STAGES NINE THRU FOURTEEN – 0.030 MIN

REAR OF VANE ASSEMBLIES AND FRONT OF ROTOR – 0.040 MIN ALL STAGES

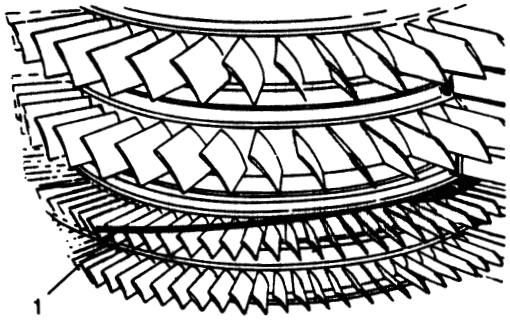

6796042-1 (0.040 INCH) AND 6796042-3 (0.030 INCH)

Figure 11. Rotor to Vane Axial Clearance Check

18. **COMPRESSOR CASING – ASSEMBLY.**

Support Equipment Required

Part No./Type Designation	Nomenclature
–––	Wrench, torque (0–100 lb in.)
–––	Wrench, torque (0–300 lb in.)

Materials Required

Specification No./Part No.	Nomenclature
MIL–S–46163	Loctite 222 or Loctite 425
MIL–S–8660	Compound, Silicone Sealant
– – –	Layout dye, Dykem blue
NS165	Compound, Anti–seize

Silicone Compound MIL–S–8660 51

a. Apply MIL–S–8660 sealant on the axial flange splitline surfaces before installing the bottom half of the case.

Anti–seize Compound (Never Seez) NS165 32

b. Apply NS165 compound to all of the bolt threads.

c. Install four bolts in the corners of the axial flanges and tighten.

d. Install and tighten three bolts in the front flange. (See figure 9 for front flange bolt locations.)

e. Install three bolts and nuts and tighten in the rear flange. (See figure 10.)

f. Install the remaining bolts and nuts in the axial flanges. (See figure 8.)

g. Torque all bolts as follows:

(1) Axial flange 1/4–28 bolts 80 – 90 lb in., 5/16–24 bolts 170 – 190 lb in. above drag torque. (QA)

(2) Rear flange bolts 170 – 190 lb in. above drag torque. (See figure 9 for rear flange bolt locations.) (QA)

(3) Front flange bolts 130 – 150 lb in. above drag torque. (QA)

19. **COMPRESSOR SHAFT COUPLING INSTALLATION.**

NOTE

Oil dam internal retaining ring may not have been previously removed.

a. Install coupling retaining ring (5, figure 12) in the rotor rear shaft grove, if not previously installed. (QA)

b. Place compressor shaft coupling (6) on the rear of the compressor rotor. Index so the locking tangs on the rear bearing nut and the slots in the coupling engage. Ensure coupling retaining ring will hold the coupling shaft when fully installed. (QA)

20. **COMPRESSOR SIDE GEAR AND BEARING INSTALLATION.**

Materials Required

Specification No./Part No.	Nomenclature
MIL–PRF–23699	Oil, lubricating

NOTE

Prior to installation of side gear and extension shaft, free state dimensions must be measured and recorded.

a. Measure and record free state dimensions of the spanner nut, spacer, bearing, and extension shaft. (QA)

Anti–seize Compound (Never Seez) NS165 32

b. Apply MIL–PRF–23699 oil to ball bearings (7, figure 13) prior to installation.

c. Install ball bearings (7) on the sidegear (6) and seat the inner race against the shoulder on the shaft. (Also see figure 14).

d. Insert the side gear and bearing assembly inside the inlet housing into the bearing cage.

21. **COMPRESSOR EXTENSION SHAFT–ASSEMBLY.**

Support Equipment Required

Part No./Type Designation	Nomenclature
3464–4	Wrench, compressor extension shaft
3732	Holder, compressor extension shaft
---	Wrench, torque (0–100 lb in.)
---	Wrench, torque (0–300 lb in.)

Materials Required

Specification No./Part No.	Nomenclature
MIL–PRF–23699	Oil, lubricating
MS20995C32	Lockwire, 0.032 inch
6849498	Washer, key

a. Place extension shaft (1, figure 13) in 3732 holder with the front end up.

WARNING

Heated parts will cause skin damage (burns). Use clean insulated gloves to handle parts.

b. Heat ball bearing (17) inner race rear half to 300°F (149°C). Refer to WP 016 00.

c. Install inner race rear half, with the “o” mark facing rearward on rotor shaft shoulder.

d. Install locking key (14) in bearing cage (19).

e. Install bearing (17) outer race and ball assembly in the flanged bearing cage, engaging the key.

f. Install retaining ring (18) in the bearing cage (19) against the outer race. Center the race around the locking key.

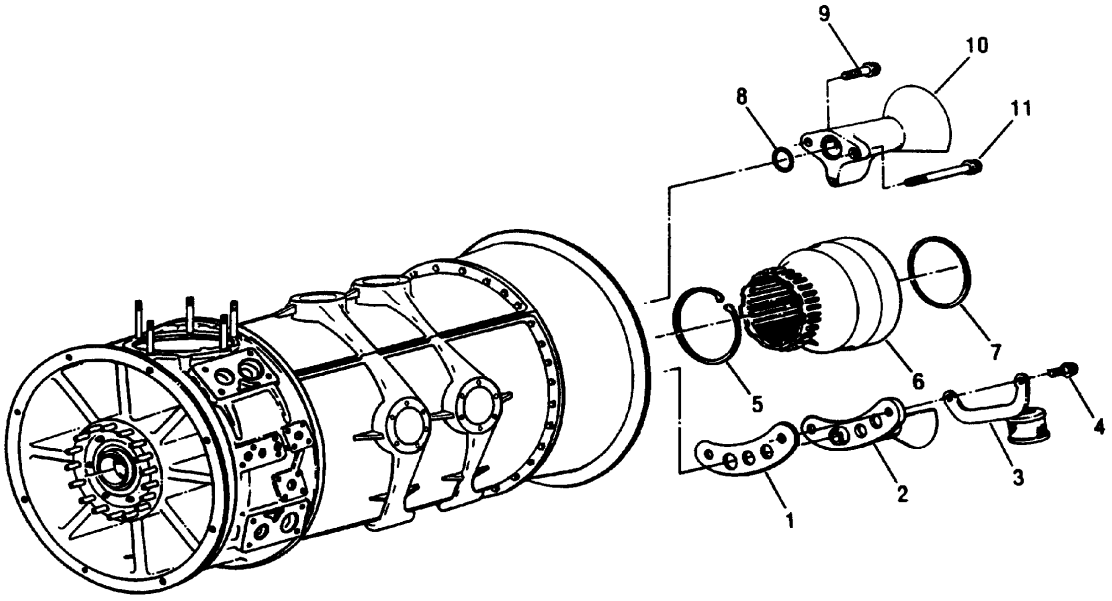

1. Gasket
2. Turbine Front Scavenge Oil Tube Adapter
3. Diffuser Oil sump Screen
4. Bolt
5. Coupling Retaining Ring
6. Compressor Shaft Coupling
7. (Oil Dam) Internal Retaining Ring
8. Metal Gasket
9. Bolt
10. Compressor Rear Bearing Oil Nozzle
11. Bolt

Figure 12. Compressor Shaft Coupling, Oil Tube Adapters, and Oil Nozzle Installation

g. Place the bearing cage over the extension shaft and against the rear half of the bearing inner race.

h. Heat the front half of the inner race to 300° F (149°C).

i. Install the front half of the inner race on the extension shaft and seat it against the rear half of the inner race. Ensure the inner race is seated. (See figure 14)

j. Place bearing spacer (11, figure 13) on the extension shaft.

Lubricating Oil, MIL–PRF–23699 2

k. Apply MIL–PRF–23699 oil to the extension shaft threads.

NOTE

Spanner nut (9) has left–hand threads.

l. Install key washer (10) and spanner nut (9) on the extension shaft. (QA)

m. Place 3464–4 wrench on the spanner nut (9) and torque 235 – 250 lb ft. Loosen and retorque 80 – 175 lb ft. (QA)

n. Measure the end play in the assembled ball bearing to assure it is no greater than in its free state. (See table 1.) (QA)

o. Bend two tabs of the key washer in the nut slots at approximately 45°.

p. Install front bearing oil jet (4) on the rear of the extension shaft housing (3). Secure with nuts (5), torque 70 – 85 lb in., and lockwire. (QA)

q. Remove the extension shaft from the 3732 holder.

22. **COMPRESSOR EXTENSION SHAFT SHIM CALCULATION.**

a. Use the following formula and information to determine the required number of shim(s) when the side gear or the extension shaft and/or bearings have been replaced. (QA)

$$\frac{(2.8270 + D) - (B + C)}{0.005} = \text{Amount of shims required}$$

NOTE

Each shim is 0.005 ± 0.0004 inch. If the calculation is a negative value, recheck the dimensions for error.

b. Dimension D is the bearing cage (19, figure 13) dimension. It is marked on the front face of the outer flange.

c. Dimension B is the studding housing (3) dimension. It is marked on the rear face recess at the oil holes.

d. Dimension C is the inlet housing dimension. It is marked on the front side of the side gear bearing pocket outside diameter.

e. Place correct number of shim(s) (16) on the shaft (1). (See figure 15.)

23. **COMPRESSOR EXTENSION SHAFT INSTALLATION.**

Support Equipment Required

Part No./Type Designation	Nomenclature
3838	Puller, compressor extension shaft
---	Wrench, torque (0–200 lb in.)

Materials Required

Specification No./Part No.	Nomenclature
AS3209–224	Seal, O–ring (1)
AS3209–252	Packing, preformed (3)
MIL–PRF–23699	Oil, lubricating
VV–P–236	Lubricant, petrolatum

WARNING

Heated parts will cause skin damage (burns). Use clean insulated gloves to handle parts.

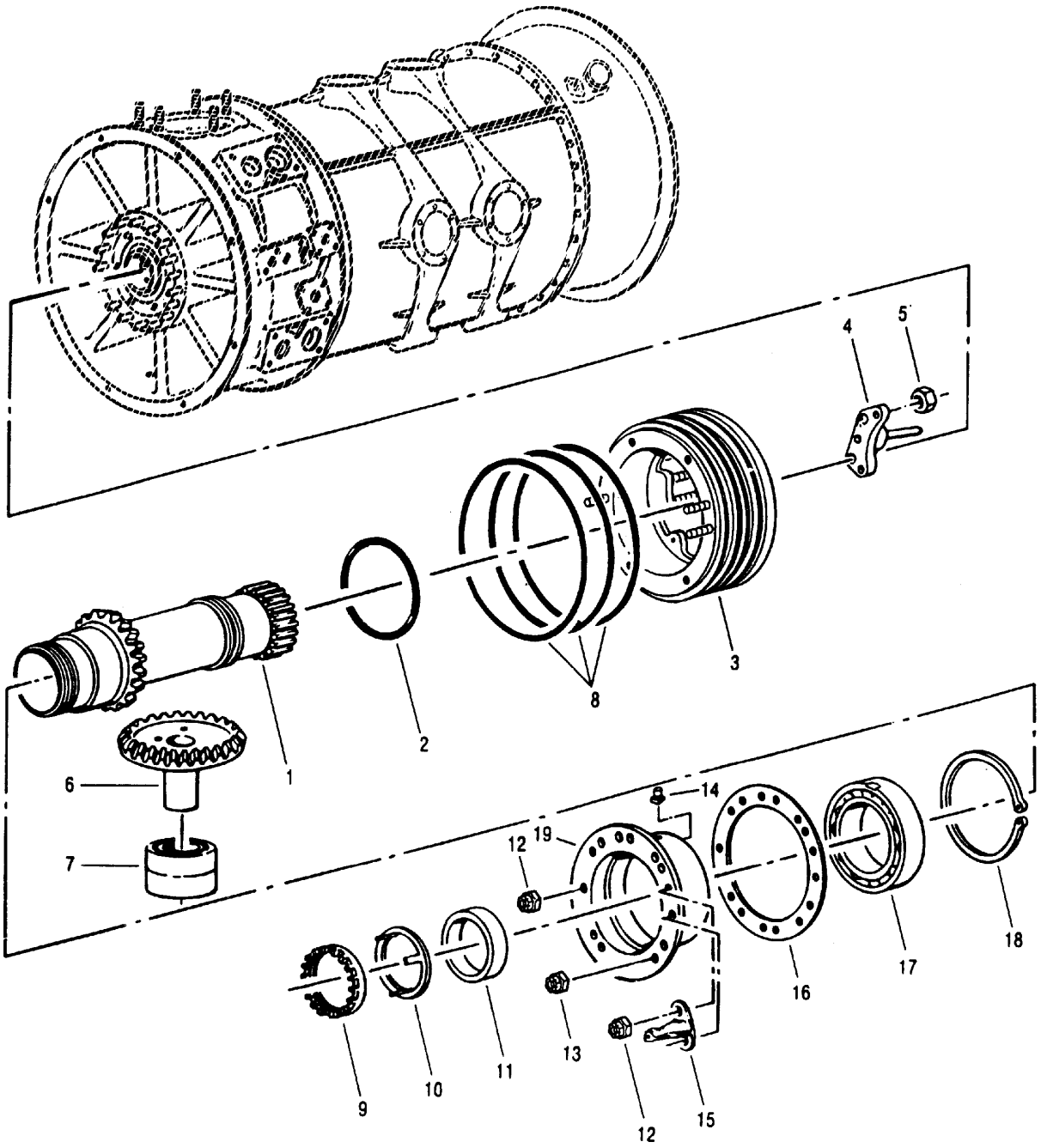

1. Compressor Extension Shaft
2. Preformed Packing
3. Compressor Extension Shaft Studding Housing
4. Compressor Front Bearing (Oil) Jet
5. Nut (2)
6. Compressor Side Gear
7. Ball Bearing (2)
8. Preformed Packing
9. Spanner Nut (LH Thread)
10. Key Washer
11. Compressor Extension Shaft Bearing Spacer
12. Nut (3)
13. Drilled $^1/_4$ Nut (4)
14. Compressor Extension Shaft Bearing Locking Key
15. Torquemeter Bearing Oil Nozzle
16. Shim (AR)
17. Ball Bearing
18. Retaining Ring
19. Compressor Extension Shaft Bearing Cage

Figure 13. Compressor Extension Shaft Details

a. Heat the studding housing (3, figure 13) to 100° F (38° C).

b. Align the oil and stud holes and install the bearing cage (19) into the studding housing.

Petrolatum Lubricant VV-P-236 33

c. Using VV-P-236 petrolatum, lubricate and install preformed packings (8) on the studding housing.

Lubricating Oil, MIL-PRF-23699 2

d. Using MIL-PRF-23699 oil, lubricate and install preformed packing (2) on extension shaft aft end.

e. Lubricate the studding housing and extension shaft spline with MIL-PRF-23699 oil.

NOTE

The front bearing oil jet is set at the 9 o'clock position as viewed from the front.

f. Place the studding housing on 3838 puller.

g. Install the studding housing into the inlet housing inside diameter.

h. Remove 3838 puller.

i. Install nuts (13) on the studs holding the extension shaft housing and cage to the inlet housing. Torque nuts 125 - 135 lb in. (QA)

j. Install torquemeter bearing oil jet (15) on the extension housing studs at the 3 o'clock position.

k. Torque three nuts (12) 70 - 85 lb in. (QA)

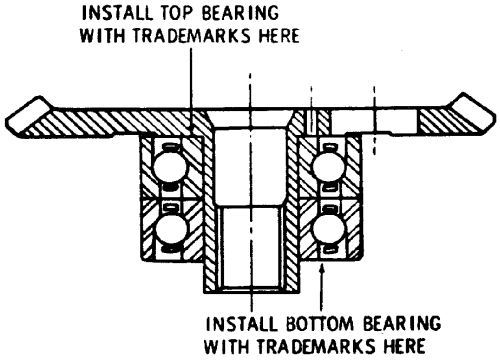

Figure 14. Compressor Side Gear Installation

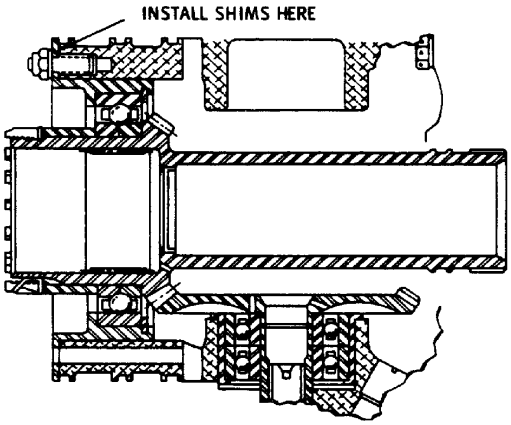

Figure 15. Compressor Extension Shaft Shim Location

24. **COMPRESSOR EXTENSION SHAFT BACKLASH CHECK.**

Support Equipment Required

Part No./Type Designation	Nomenclature
6798774	Fixture, extension shaft to side gear backlash
6798775	Fixture, extension shaft loading
---	Wrench, torque (0-100 lb ft.)

Materials Required

Specification No./Part No.	Nomenclature
MS20995C32	Lockwire, 0.032 inch

a. Install 6798775 and 6798774 fixtures in the accessory drive housing shaft gear pad. Tighten the nut to secure the fixtures inside the gear. (See figure 16.)

b. Using torque wrench on nut of 6798775 fixture, preload the extension shaft rearward with a 20 to 25 lb in. force prior to checking backlash.

c. Ensure the backlash is between 0.0095 to 0.0135 inch. (QA)

NOTE

If backlash is not within limits, extension shaft must be removed and shims added or deleated, not to exceed 2 shims. Replace side gear if still unable to meet limits.

d. Remove 6798774 and 6798775 fixtures.

e. Lockwire nuts (12 and 13, figure 13). (QA)

25. **TORQUING THE COMPRESSOR REAR BEARING NUT.**

Support Equipment Required

Part No./Type Designation	Nomenclature
3755	Holder, compressor extension shaft forward spline
3855	Wrench, compressor rear bearing nut
---	Wrench, torque (0-100 lb in.)
---	Wrench, torque (0-300 lb in.)

Materials Required

Specification No./Part No.	Nomenclature
MS20995C32	Lockwire, 0.032 inch
MS9202-015	Packing, preformed
6843535	Gasket

a. Install 3755 holder on the compressor rotor to secure the rotor while torquing the rear bearing nut. (See figure 17.)

b. Using the 3855 wrench, torque the rear bearing nut 250 lb. ft. Loosen the nut and retorque 130 - 150 lb. ft. (QA)

c. Assemble metal gasket (8, figure 12), oil nozzle (10), gasket (1), oil tube adapter (2), and oil pump screen (3).

d. Using bolts (4, 9, and 13), install items in diffuser rear bearing cavity. Torque bolts 70-85 lb in. and lockwire all bolts. (QA)

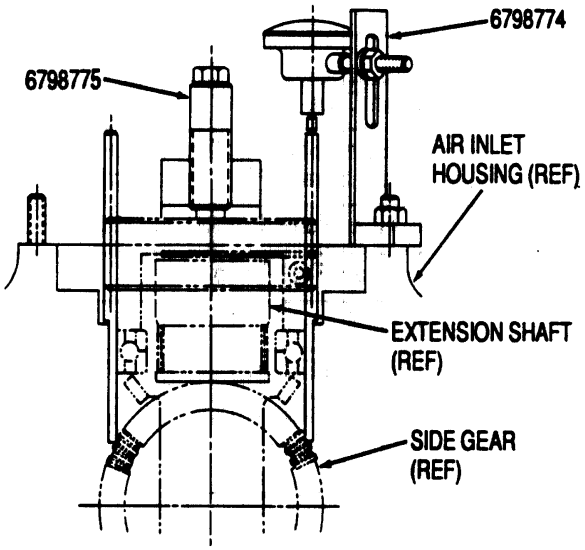

Figure 16. Measuring Backlash with 6798775 Loading Fixture and 6798774 Backlash Fixture

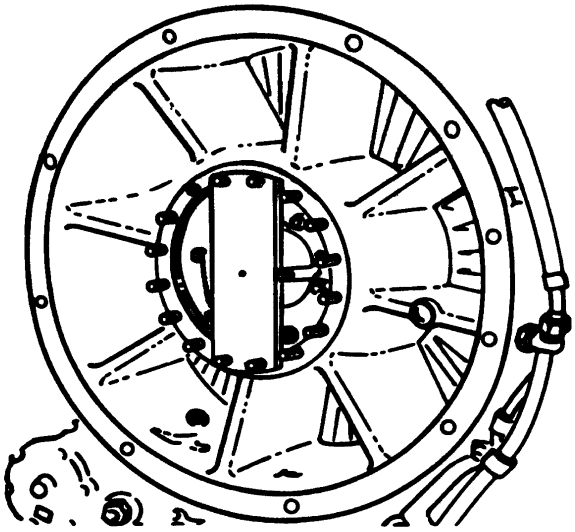

Figure 17. 3755 Compressor Extension Shaft Forward Spline Holder Installed

26. **EXTERNAL COMPONENTS INSTALLATION**

a. Install external components. Refer to table 2 for corresponding WP numbers.

b. Refer to NAVAIR 02B-5DG-6-1-1 for locations of tubing, cabling, and clamps.

Table 2. Installation of External Components

Task	WP No.
Accessory Drive Housing	029 00
Engine Spray Shield Baffle, Engine Spray Shield Upper Baffle, and Engine Spray Shield Lower Baffle	031 00
Engine Rear Mount Bracket and Engine Rear Mounting Plate	031 00
Dual Element Fuel Pump	058 00
Fuel Control	064 00
Power Section External Scavenge Oil Pump	078 00
Left, Right, and Interconnecting Wiring Harnesses	081 00
Ignition Exciter	082 00
Ignition Relay	084 00
Speed Sensitive Valve	088 00
Compressor Bleed Air Filter	090 00
Anti–icing Solenoid Valve	091 00
Anti–icing Valves (2)	092 00
Temperature Sensing Probe and Anti–icing Tube	093 00
Combination Total Temperature – Pressure Sensor and Compressor Bleed Air Collectors	094 00
Compressor Bleed Air Valves	089 00

INTERMEDIATE MAINTENANCE

CLEANING, INSPECTION, REPAIR

COMBUSTION CHAMBER OUTER CASING ASSEMBLY

Reference Material

None

Alphabetical Index

Subject Page No.

Cleaning 2

Inspection 2

Record of Applicable Technical Directives

None

1. **INSPECTION.**

a. Inspect sheet metal surfaces for corrosion. No corrosion allowed.

b. Inspect boss threads for damage. No damage allowed.

2. **CLEANING.**

Support Equipment Required

Part No./Type Designation	Nomenclature
ZA–43	Kit, inspection, fluorescent dye penetrant

Materials Required

Specification No./Part No.	Nomenclature
H–B–178	Brush
MIL-PRF-680, Type II	Solvent, cleaning

Lubricating Oil, MIL–PRF–23699 **2**

a. Clean surface with Fed. Spec MIL–PRF–680, Type II cleaning solvent.

b. Remove any scale corrosion by hand with a wire brush. Then grit blast (glass beads) to remove corrosion from minute pits.

c. Reject any combustion chamber outer casing when the scale corrosion is so severe it cannot be removed by hand wire brushing and/or grit blast.

Fluorescent Dye Penetrant ZA–43 **17**

d. Fluorescent dye penetrant inspect (FPI) the casing.

INTERMEDIATE MAINTENANCE

CLEANING, INSPECTION AND REPAIR

COMBUSTION LINERS, LINER SUPPORTS AND CROSSOVER TUBES

Reference Material

Inspection and Non–Destructive Testing (NDT) – Standard Practices . . . . . WP 014 00

Alphabetical Index

Subject	Page No.
Combustion Liner Assemblies	2
Combustion Liner Crossover Tubes	2
Combustion Liner Supports	2

Record of Applicable Technical Directives

None

1. **COMBUSTION LINER SUPPORTS.**

2. CLEANING.

a. Cleaning procedure for –427 to be determined.

3. INSPECTION.

a. Visually inspect supports for cracks.

b. Replace any support which exhibits either of the following crack conditions.

(1) Any continuous crack, exceeding 0.375 inches found either above or below the flange.

(2) Any continuous crack, which extends above and below the flange, exceeding 0.125 inch long.

c. If a support is worn on one side only, and wear does not exceed a depth of 0.0312 inch, assemble support with worn side toward front of engine.

d. Replace supports when wear exceeds a depth of 0.0312 inch on both sides.

4. **COMBUSTION LINER CROSSOVER TUBES.**

5. INSPECTION. Condemn tubes if flange thickness is less than 0.025 inch.

6. **COMBUSTION LINER ASSEMBLIES.**

7. INSPECTION.

a. Inspect combustion liners for distortion, burn holes, and missing metal. Cracks are serviceable unless inspection indicates that a portion on the combustion liner may break off because of converging cracks. Cracks in the thermal barrier coating are serviceable.

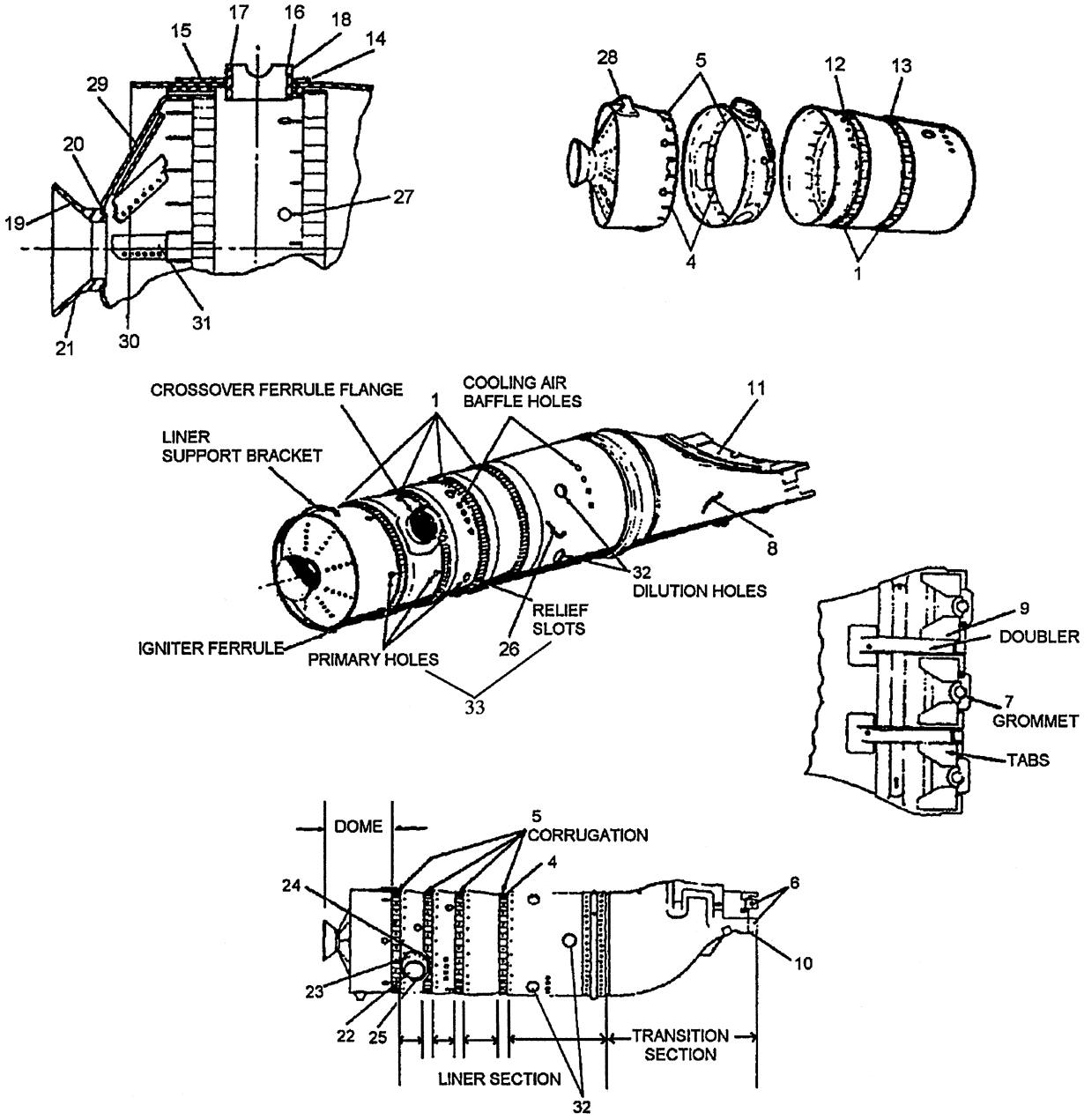

Figure 1. Combustion Liner Details

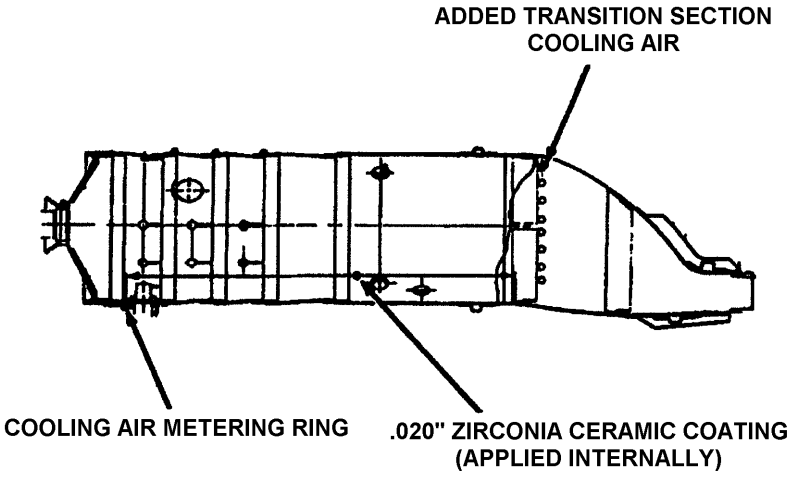

Figure 2. Combustion Liner Details

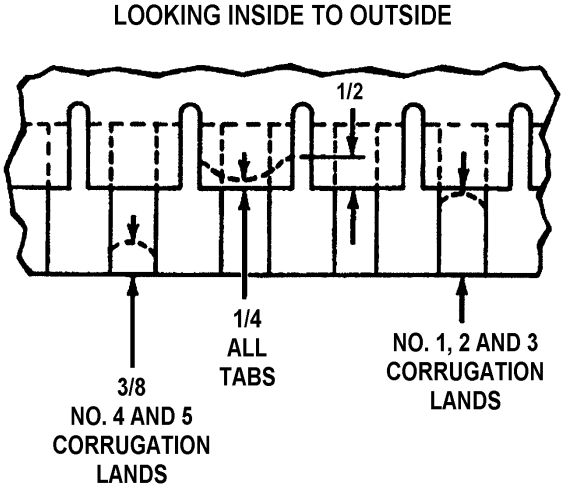

a. No. 1, 2 and 3 corrugation lands may be burned up to the trailing edge of the liner section tab the total width of the land.

NOTE

Corrugation strips are numbered, starting at the liner dome.

b. No. 4 and 5 corrugation lands may be burned up to 3/16 inch from the trailing edge of the land the total width of the land.

c. Tabs may be burned 1/2 inch on the corners and 1/4 inch between slots.

d. Not more than six burned lands or tabs in any one section.

Figure 3. Burn and Erosion Limits for Liner Tab Ends and Corrugations

INTERMEDIATE MAINTENANCE

CLEANING, INSPECTION AND REPAIR

TURBINE COUPLING SHAFT

Reference Material

None

Alphabetical Index

Subject	Page No.
Cleaning	2
Inspection	2
Repair	2

Record of Applicable Technical Directives

None

1. **CLEANING.**

Materials Required

Specification No./Part No.	Nomenclature
MIL-PRF-680 , Type II	Solvent, cleaning

Dry Cleaning Solvent
MIL–PRF–680, Type II **3**

a. Clean shaft with MIL–PRF–680, Type II cleaning solvent.

2. **INSPECTION.**

The turbine coupling shaft is a balanced assembly and shall not be disassembled.

a. Replace turbine coupling shaft if any of the following conditions are observed:

(1) Any noticeable step wear on splines. (See figure 1.)

(2) Rear spacer ID exceeds 1.9712 inch.

(3) Chipped plating on shaft OD exceeds 1/2 inch long and 1/4 inch wide.

3. **REPAIR.**

Materials Required

Specification No./Part No.	Nomenclature
MIL–R–3043	Coating, resin
MIL-PRF-680, Type II	Solvent, cleaning

a. Spline burrs may be removed by light stoning or polishing.

b. Chipped plating on shaft OD that is less than 1/2 inch long and 1/4 inch wide may be blended and touched up with resin coating as follows:

Dry Cleaning Solvent
MIL–PRF–680, Type II **3**

(1) Clean the reworked area by washing with MIL–PRF–680, type II.

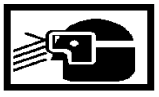

Compressed Air **58**

(2) Dry with compressed air. (Do not touch cleaned areas with dirty gloves or bare hands.)

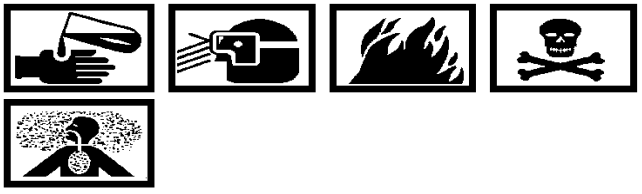

Resin Coating Thermosetting MIL–PRF–3043 **40**

(3) Spray the area with MIL–R–3043 resin coating, when spraying is impractical, brushing will be permissible.

(4) Coating shall be continuous, uniform and free from bubbles, fatty edges, pin holes, runs, sags and other surface imperfections.

(5) Air dry the area for not less than 15 minutes.

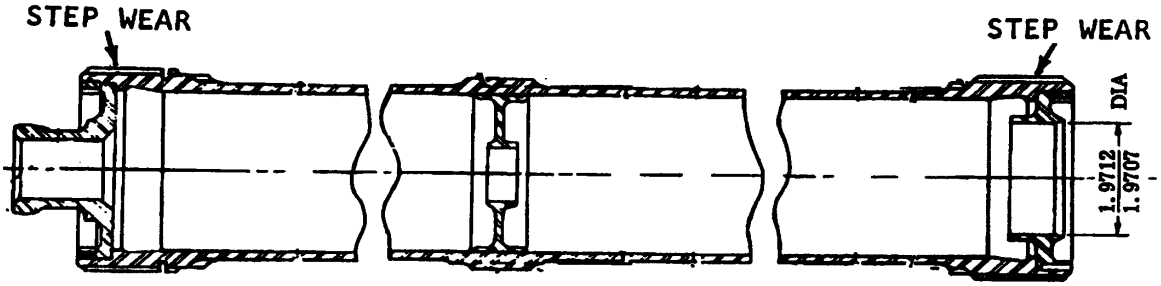

Figure 1. Turbine Coupling Shaft Wear Locations

INTERMEDIATE MAINTENANCE

DISASSEMBLY

TURBINE UNIT ASSEMBLY

Reference Material

Combustion Chamber Outer Casing, Liners, and Turbine Coupling Shaft – Removal and Installation . . . . . WP 031 00

Thermocouple Assemblies – Maintenance . . . . . WP 083 00

Alphabetical Index

Subject Page No.

Turbine Unit Assembly – Disassembly 2

Combustion Chamber Liners, Inner Casing, and Inner Casing Liner Removal 2

Turbine Front Bearing Outer Race and Front Bearing Support Removal 3

Turbine Inlet Casing Removal 6

Turbine Rear Bearing Support Disassembly 11

Turbine Rotor Axial Clearance Check 2

Turbine Rotor Removal 9

Record of Applicable Technical Directives

None

1. **TURBINE UNIT ASSEMBLY – DISASSEMBLY.**

NOTE

During turbine disassembly, if a turbine vane is found with vane burn–through in any stage, an entry in the Turbine Rotor Service Record Card shall be made which states, "Turbine Rotor replaced and returned for wheel and blade replacement due to_____stage vane burn–through." Burn–through is defined as the complete melting or disintegration of the vane airfoil material until there is no connection (physical material bond) between the remaining segments of the detail vane which are still attached to the inner and outer bands of the vane assembly.

NOTE

Tasks in this work package can be performed with turbine installed in 6795905 engine component turnover stand with adapter 23033000 or 6796980 engine component–to–parallel rail stand rotating adapter with adapter 23033000.

2. TURBINE ROTOR AXIAL CLEARANCE CHECK.

Support Equipment Required

Part No./Type Designation	Nomenclature
3856	Gage, turbine rotor–to–vane assembly axial clearance
6796535	Adapter, gage, turbine rotor–to–vane assembly axial clearance
6796569	Wrench, positioning, turbine rotor axial movement

a. Before disassembly check the turbine total travel as follows:

CAUTION

Use care in the following operation. Rotor must turn without any friction; do not force rotation.

(1) Attach 3856 gage (figure 1) and 6796535 adapter (figure 2) to turbine. (QA)

(2) Place 6796569 wrench (figure 3) on hub of fourth–stage wheel.

(3) Carefully pull rotor to maximum rearward position as determined by a slight rubbing while turning rotor.

(4) Preload 3856 gage to 0.400 in. Zero the indicator. (QA)

(5) Move rotor to maximum forward position, using 6796569 wrench.

(6) Record this measurement. (QA)

(7) If rotor total travel is less than 0.230 inch, check for misaligned or warped vane segments during turbine disassembly.

3. COMBUSTION CHAMBER LINERS, INNER CASING, AND INNER CASING LINER REMOVAL.

Support Equipment Required

Part No./Type Designation	Nomenclature
2308	Puller, tee handle (4 Req'd)
6797484	Jack, adjusting, turbine rotor clearance
6799717	Cover, turbine inlet casing

a. Install 6797484 jack (figure 5) on rear flange and adjust jack until it contacts the rotor.

b. Slowly turn turbine to vertical position, front end up.

c. Remove combustion liners per WP 031 00.

d. Remove seal rings (14, figure 4) from grooves on front end of combustion chamber inner casing.

e. Install 6799717 cover (figure 6) on turbine inlet casing.

f. Remove preformed packings (15, figure 4) from ends of pressure and scavenge oil tubes.

g. Remove bolts (9) and screws (10) at forward end of combustion chamber inner casing (1), and remove bolts (13) at combustion chamber inner casing–to–turbine inlet casing splitline.

h. Using four 2308 tee handle pullers, remove the combustion chamber inner casing (1).

i. Remove metal gasket (3) from rear flange.

CAUTION

Use care removing combustion chamber inner casing liner to prevent damaging pressure oil tube and the scavenge oil tube.

j. Remove bolts (12).

k. Remove combustion chamber inner casing liner (5).

l. Remove metallic O–ring seals (4) and (6) from the rear flange and front end of combustion chamber inner casing liner.

m. Remove the bolts (8) and pressure oil tube (7).

n. Remove bolts (11) and scavenge oil tube (2).

o. Remove thermocouples per WP 083 00.

4. TURBINE FRONT BEARING OUTER RACE AND FRONT BEARING SUPPORT REMOVAL.

Support Equipment Required

Part No./Type Designation	Nomenclature
23033003	Puller, turbine front labyrinth seal
6799621	Wrench, turbine coupling clamp nut
6799642	Puller, turbine front bearing outer race
6799902	Puller, turbine front bearing seal
6893714	Puller, support assembly turbine front bearing

Materials Required

Specification No./Part No.	Nomenclature
BB–C–104	Ice, dry

a. Remove lockring (1, figure 7) from nut (2).

b. Slowly rotate turbine to the horizontal position.

c. Using 6799621 wrench (figure 8) remove (right–hand threaded) nut (2, figure 7).

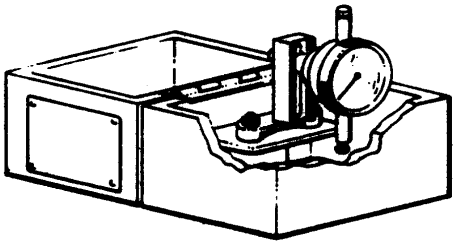

Figure 1. 3856 Turbine Rotor Vane Assembly Axial Clearance Gage

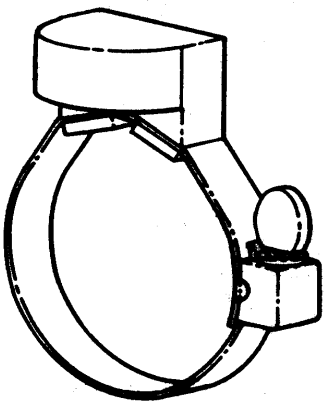

Figure 2. 6796535 Turbine Rotor–to–Vane Assembly Axial Clearance Gage Adapter

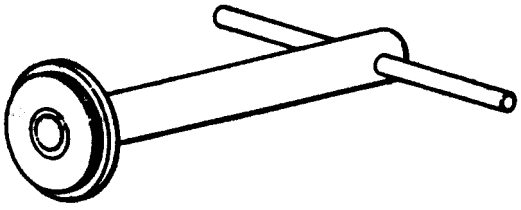

Figure 3. 6796569 Turbine Rotor Axial Movement Positioning Wrench

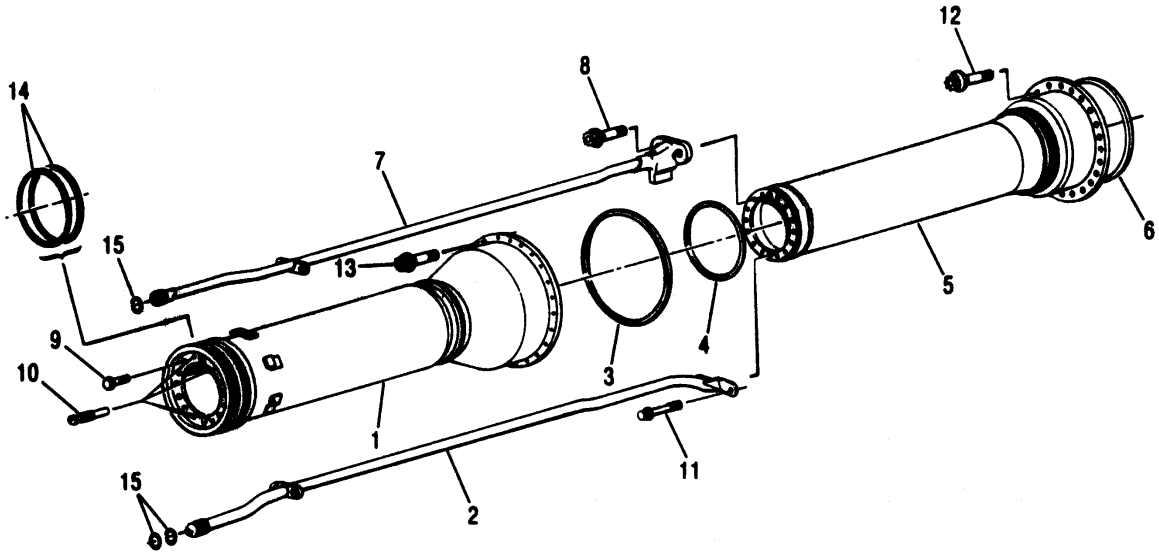

1. Combustion Chamber Inner Casing
2. Scavenge Oil Tube
3. Metal Gasket
4. Metallic O–ring Seal
5. Combustion Chamber Inner Casing Liner
6. Metallic O–ring Seal
7. Pressure Oil Tube
8. Bolt
9. Bolt
10. Screw
11. Bolt
12. Bolt
13. Bolt
14. Seal rings
15. Preformed Packing

Figure 4. Combustion Chamber Inner Casing, Inner Casing Liner, and Oil Tubes Details

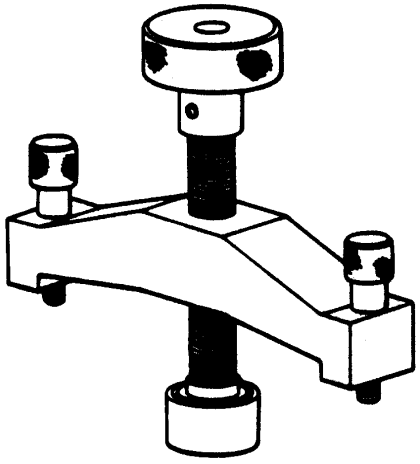

Figure 5. 6797484 Turbine Rotor Clearance Adjusting Jack

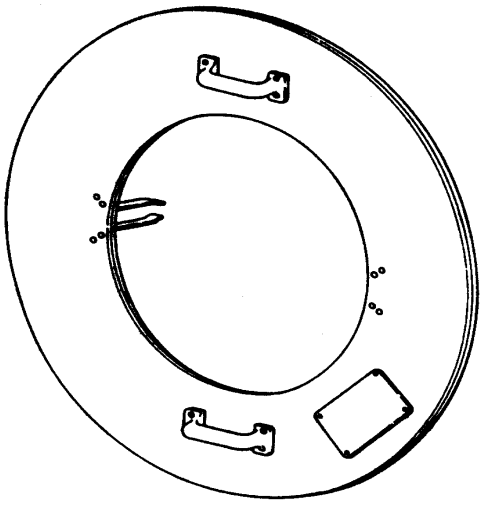

Figure 6. 6799717 Turbine Inlet Casing Cover

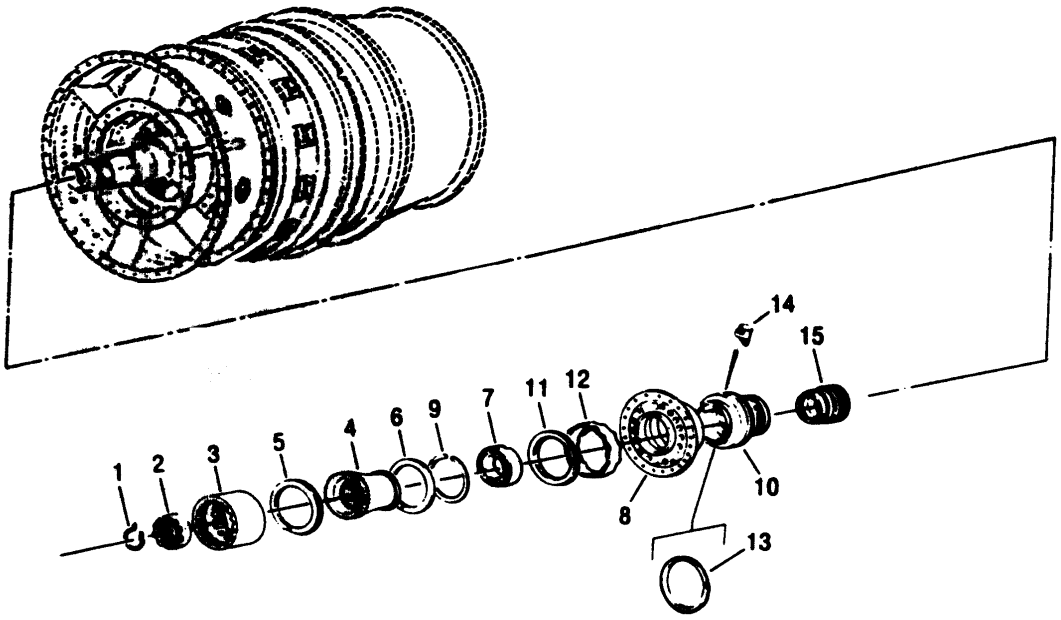

1. Lockring
2. Nut
3. Coupling
4. Adapter
5. Retaining Ring
6. Retaining Ring
7. Bearing
8. Front Bearing Support
9. Retaining ring
10. Bearing Cage
11. Retaining Ring
12. Vibration Damper
13. Split Seal ring
14. Anti-rotation Pin
15. Labyrinth Seal

Figure 7. Turbine Front Bearing and Seal Details

d. Remove coupling (3) and adapter (4).

e. Remove retaining ring (5) and separate the coupling from the adapter.

f. Remove retaining ring (6) from the adapter.

g. Rotate the turbine to the vertical position.

h. Install 6799902 puller on front bearing support (8). (See figure 9.)

i. Remove bearing (7, figure 7) inner race and rollers.

j. Install 6893714 puller in 1/4-28 jackscrew holes and on turbine shaft. (See figure 10.)

k. Remove front bearing support (8, figure 7) and bearing cage (10).

l. Remove retaining ring (9) from front of bearing cage (10).

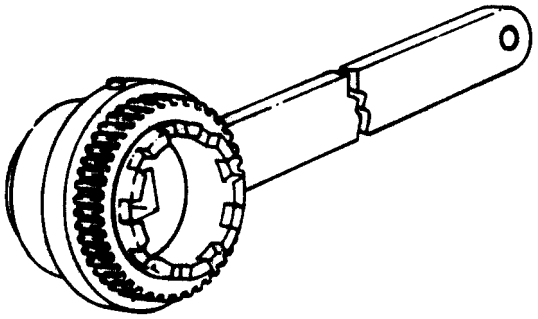

Figure 8. 6799621 Turbine Coupling Clamp Nut Wrench

m. Install 6799642 puller on front bearing support (8). (See figure 11.)

n. Remove bearing (7, figure 7) outer race from bearing cage (10).

o. Remove retaining ring (11) and separate bearing cage (10) from front bearing support (8).

p. Remove vibration damper (12) from front bearing support (8) or bearing cage (10).

q. Remove the split seal ring (13) from the bearing cage. (The anti–rotation pin (14) is pinned to the bearing the cage.)

Dry Ice, BB–C–104 **59**

WARNING

Super–chilled (frozen) parts will cause freezer burn. Use clean insulated gloves to handle dry ice and frozen parts.

r. Cool the bearing journal using dry ice and install 23033003 puller over bearing cage (10). (See figure 12.)

s. Engage the clam shell flange of 23033003 puller in the labyrinth seal slot and remove labyrinth seal (15, figure 7).

5. TURBINE INLET CASING REMOVAL.

Support Equipment Required

Part No./Type Designation	Nomenclature
23038034	Separator, turbine vane casing and turbine vane assembly (three required)

NOTE

The rear bearing clamp nut needs to be loosened before removing the turbine inlet casing.

a. Loosen rear bearing clamp nut (1, figure 13). Do not remove nut.

b. Remove nuts (2), bolts (3), bracket (4), and piloting keys (5) (four places) between turbine inlet casing (6) and turbine vane casing (7).

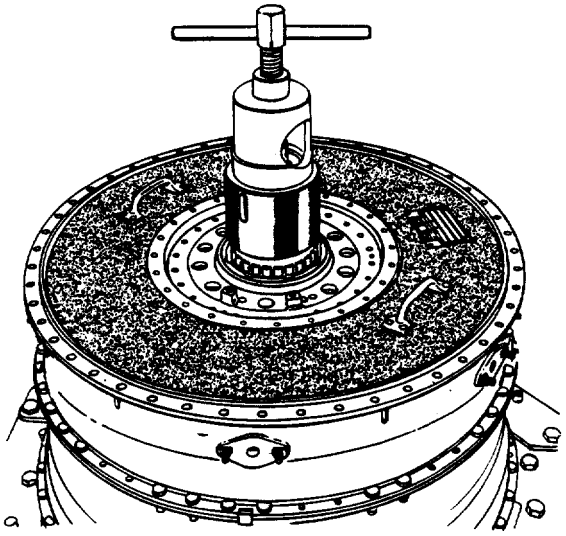

Figure 9. Removing Turbine Front Bearing Inner Race and Rollers Using 6799902 Puller

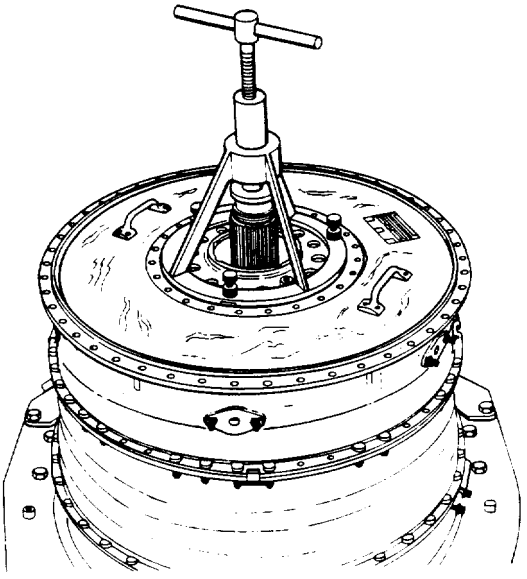

Figure 10. Removing Turbine Front Bearing Support Using 6893714 Puller

CAUTION

Be careful not to damage the first stage blade track material when removing the turbine inlet casing.

c. Slowly lift the turbine inlet casing from the turbine vane casing.

d. Remove four second stage vane retainers (8).

e. Remove split metal O–ring (9) from around the second stage vanes.

f. Remove nuts (10), bolts (11), four piloting keys (12), and brackets (13,14) from turbine vane casing and the rear bearing support (15) splitline.

g. Remove turbine vane casing while tapping with a soft rubber mallet in a circular fashion around the second stage vanes.

h. Adjust 6797484 jack (figure 5) upward until pressure is removed from turbine rotor.

i. Using three 23038034 separators (figure 14), spread vane segments (17, 19, figure 13) from the seal strips (18, 20).

NOTE

When removing 4th stage vane segments, lift 3rd and 2nd stage vane segments up to clear. When removing 3rd stage vane segments, lift the 2nd stage segments up to clear. Stages interlock and this will facilitate removal.

j. Remove fourth (16), third (17), and second (19) stage vane segments.

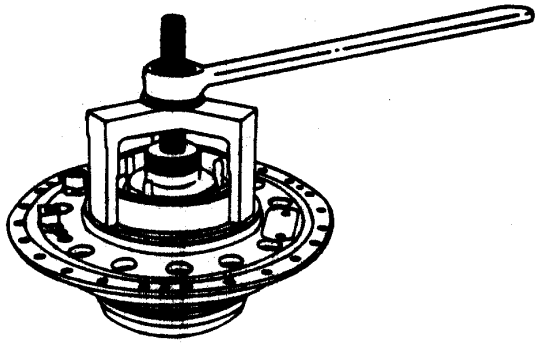

Figure 11. Removing Turbine Front Bearing Outer Race Using 6799642 Puller

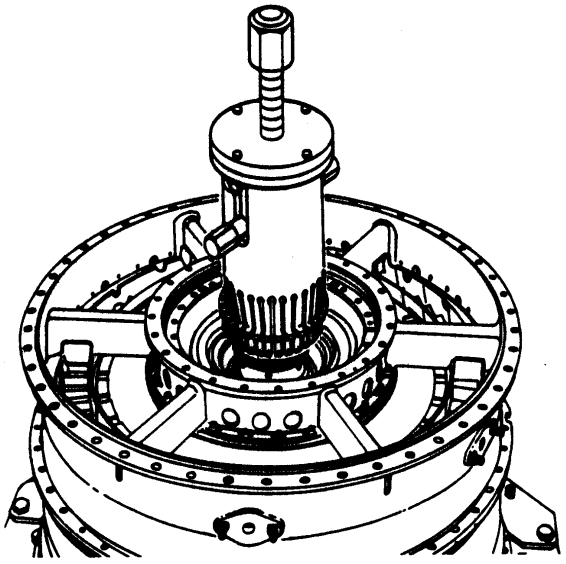

Figure 12. Removing Turbine Front Labyrinth Seal Using 23033003 Puller

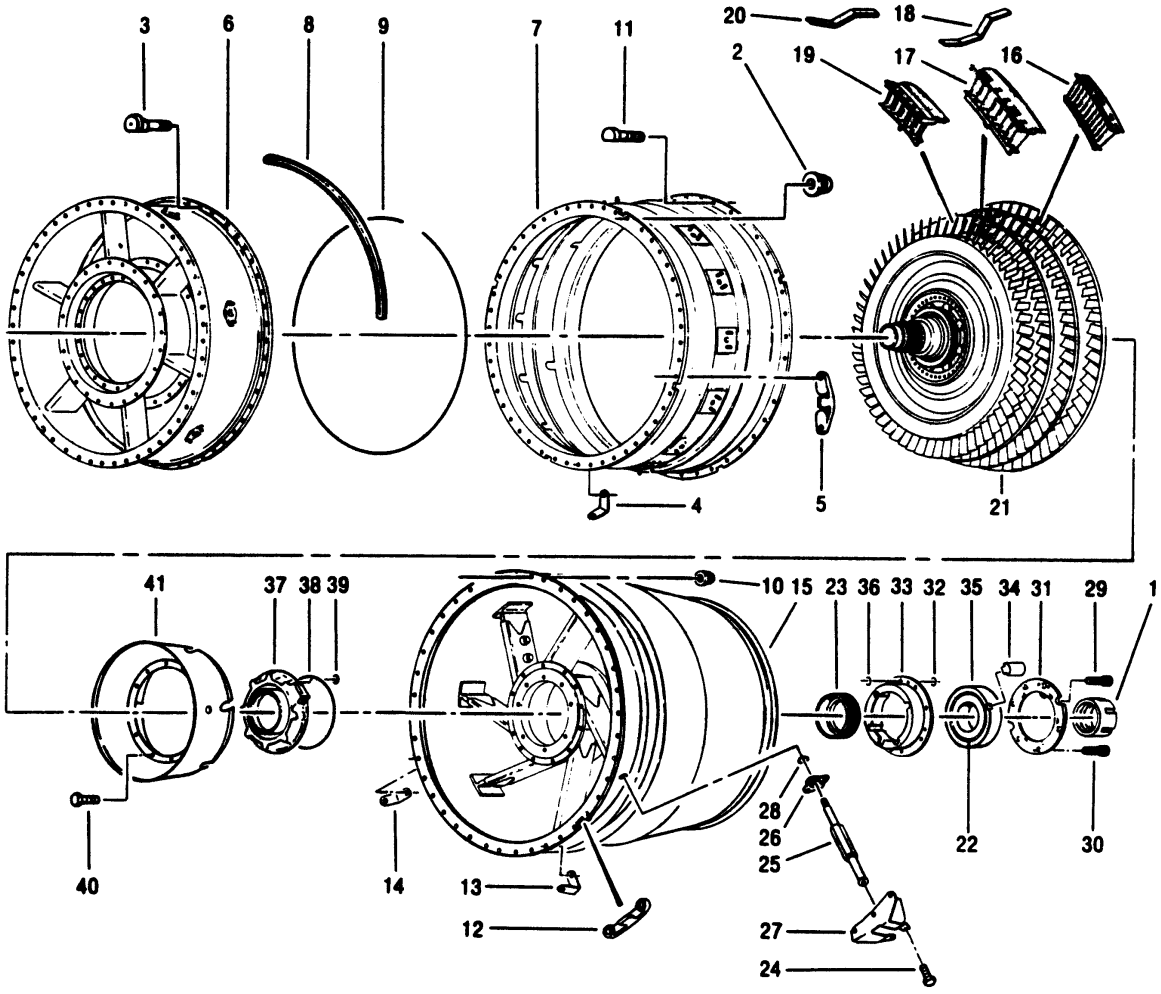

1. Rear Bearing Clamp Nut
2. Self–locking Nut
3. Bolt
4. Angle Bracket
5. Front Casing Piloting Key
6. Turbine Inlet Casing
7. Turbine Vane Casing
8. Second Stage Vane Retainer (4)
9. Split Metal O–ring
10. Self–locking Nut
11. Bolt
12. Rear Casing Piloting Key
13. Bracket
14. Angle Bracket
15. Turbine Rear Bearing Support
16. Fourth Stage Vane Segment (6)
17. Third Stage Vane Segment (7)
18. Second Stage Vane Seal Strip
19. Second Stage Vane Segment (14)
20. Third Stage Vane Seal Strip
21. Turbine Rotor
22. Roller Bearing Inner Race
23. Rear Sump Labyrinth Seal
24. Bolt (22)
25. Rear Bearing Oil Tube
26. Rear Bearing Oil Tube Flange
27. Rear Oil Tube Bracket
28. Metal (O–ring) Gasket
29. Bolt (2)
30. Bolt (7)
31. Rear Bearing Retainer
32. Metal (O–ring) Gasket
33. Rear Bearing Cage
34. Rear Bearing Locking Key
35. Roller Bearing Outer Race
36. Metal (O–ring) Gasket
37. Rear Bearing Sump Seal
38. Metal (O–ring) Gasket
39. Metal (O–ring) Gasket
40. Bolt
41. Inner Forward Flow Path Shroud

Figure 13. Turbine Unit Details

6. TURBINE ROTOR REMOVAL.

Support Equipment Required

Part No./Type Designation	Nomenclature
23032975	Sling, turbine rotor
23033002	Puller, turbine bearing and seal
6796546	Cover, turbine rotor
6796836	Stand, turbine transportation and storage
6796836-202	Adapter
6798242	Retainer, turbine rear bearing rollers
6799523	Adapter, trunnion, turbine rotor stand
6799619	Adapter, turbine rotor lifting

a. Attach 6799523 trunnion adapter and 6799619 lifting adapter on forward end of turbine rotor. (See figure 15.)

CAUTION

Turbine Rotor Stand 4th Stage Wheel Adapter P/N 6767836-202 shall not be used for lifting.

b. Using a hoist lift, remove turbine rotor (21, figure 13) from turbine rear bearing support (15).

c. When turbine rotor clears the turbine rear bearing support, insert 6798242 retainer (figure 16) through roller bearing outer race (35) and rollers.

NOTE

The rear bearing clamp nut, roller bearing inner race, and labyrinth seal are removed from turbine rotor while suspended by hoist lift.

d. Remove (previously loosened) rear bearing clamp nut (1, figure 13).

e. Install 23033002 puller on rear of turbine rotor. (See figure 15.)

f. Remove roller bearing inner race (22, figure 13) and rear sump labyrinth seal (23) from the turbine rotor.

g. Attach 6796836-202 adapter (figure 17) on rear of turbine rotor shaft.

h. Lower turbine rotor into 6796836 turbine transportation and storage stand (figure 17).

NOTE

If it is desired to lift turbine rotor in a horizontal position, use 23032975 sling (figure 18).

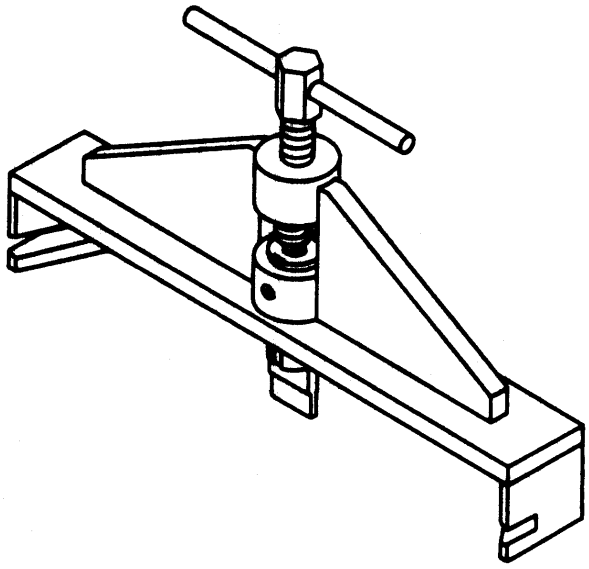

Figure 14. 23038034 Turbine Vane Casing and Turbine Vane Separator

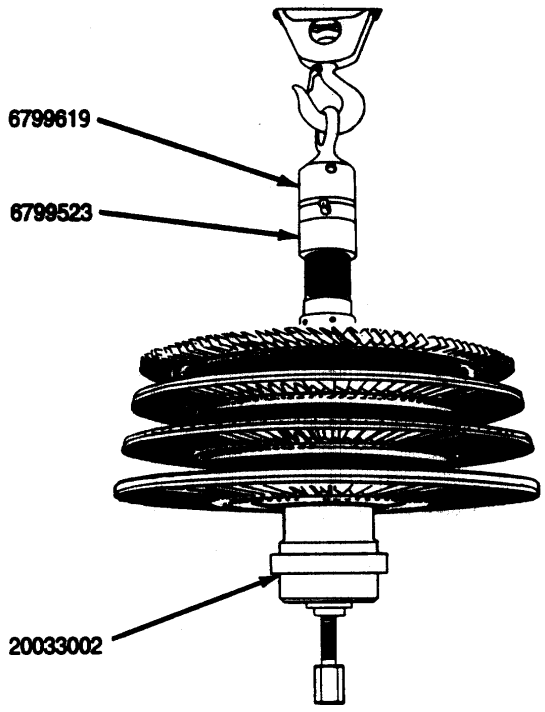

Figure 15. Removing Roller Bearing Inner Race and Labyrinth Seal Using 23033002 Puller

i. Remove 6797484 jack from (figure 5) turbine rear bearing support (15, figure 13).

j. Install 6796546 cover (figure 19) over turbine rotor.

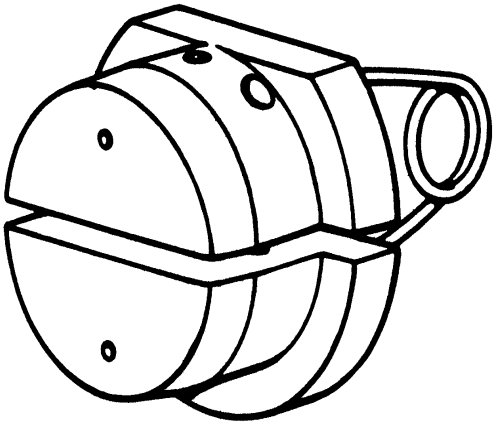

Figure 16. 6798242 Turbine Rear Bearing Rollers Retainer

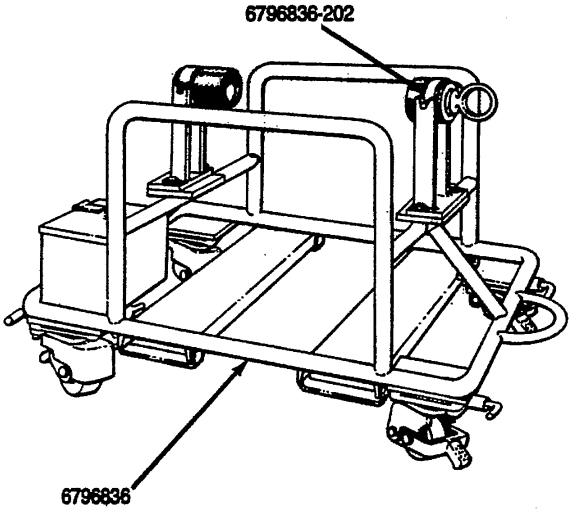

Figure 17. 6796836 Turbine Rotor Transportation and Storage Stand

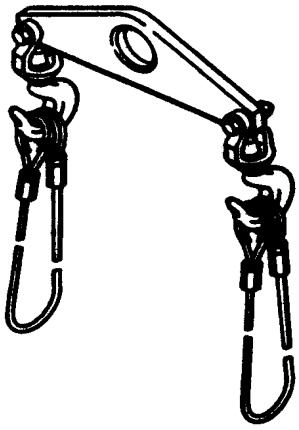

Figure 18. 23032975 Turbine Rotor Sling

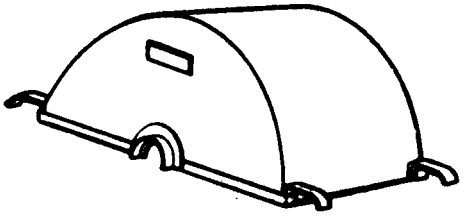

Figure 19. 6796546 Turbine Rotor Cover

7. TURBINE REAR BEARING SUPPORT DISASSEMBLY.

Support Equipment Required

Part No./Type Designation	Nomenclature
6796531	Puller, turbine rear bearing cage
6796541	Puller, turbine rear bearing outer race
6796619	Pliers, metal O-ring seal removing

CAUTION

Before turning turbine rear bearing support, ensure 6797484 jack and 6798242 retainer are removed.

a. Remove 6798242 retainer (figure 16) roller bearing outer race (35, figure 13) rollers, and turn turbine rear bearing support (15) to horizontal position in stand.

b. Remove bolts (24), rear bearing oil tube (25), flange (26), and bracket (27) from turbine rear bearing support.

c. Remove metal O-ring gasket (28) from rear bearing oil tube.

d. Remove two bolts (29), seven bolts (30), and rear bearing retainer (31).

e. Remove metal O-ring gaskets (32, 36) from rear bearing cage (33). (See figure 22.)

f. Install 6796531 turbine rear bearing cage puller. (See figure 20.)

g. Remove rear bearing cage (33, figure 13).

h. Remove locking key (34) and roller bearing outer race from rear bearing cage (33) using 6796541 turbine rear bearing outer race puller. (See figure 21.)

i. Remove metal O-ring gasket (36, figure 13) from rear bearing cage.

j. Remove rear bearing sump seal (37) from turbine rear bearing support.

k. Remove metal O-ring gaskets (38, 39) at oil passage of rear bearing sump seal.

l. Remove bolts (40) and inner forward flow path shroud (41) from turbine rear bearing support.

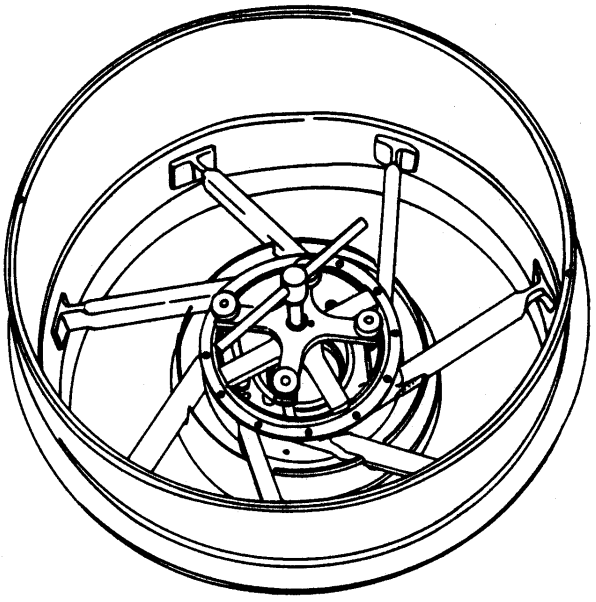

Figure 20. Removing Rear Bearing Cage Using 6796531 Puller

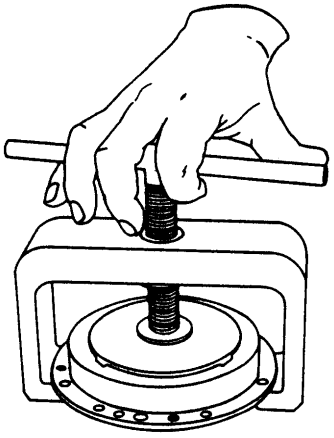

Figure 21. Removing Bearing Outer Race from Rear Bearing Cage Using 6796541 Puller

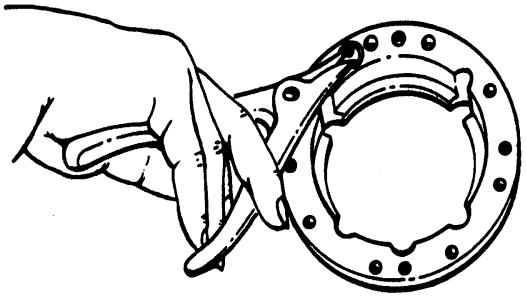

Figure 22. Removing Metal O-ring Gasket Using 6796619 Pliers

INTERMEDIATE MAINTENANCE

CLEANING, INSPECTION, AND REPAIR

TURBINE UNIT PARTS

Reference Material

Cleaning and Corrosion Treatment – Standard Practices . . . . . WP 013 00
Inspection and Non–destructive Testing (NDT) – Standard Practices . . . . . WP 014 00
Maintenance of Aeronautical Antifriction Bearings . . . . . NAVAIR 01–1A–503
Cleaning Materials . . . . . NAVAIR 07–1–503
Turbine Engine Cleaning Instructions . . . . . NAVAIR 07–1–504

Alphabetical Index

Subject	Page No.
Cleaning	2
Inspection and Repair	2
Combustion Chamber Inner Casing	2
Combustion Chamber Inner Casing Liner	2
First– and Fourth–stage Wheel Bearing Journals	2
Inner Rear Exhaust Cone	4
Turbine Bearings	26
First–stage Turbine Blade Assembly and Second–, Third–, and Fourth–stage Turbine Blades	7
Turbine Coupling Shaft	26
Turbine Front Bearing Cage	2
Turbine Front Bearing Support	2
Turbine Front Bearing Vibration Damper	2
Turbine Inlet Casing	5
Turbine Rear Bearing Cage Cap	4
Turbine Rear Bearing Support	3
Turbine to Compressor Tie Bolt	26
Turbine Unit Oil Passages	26
Turbine Vane Assemblies	7
Turbine Vane Casing	6

Record of Applicable Technical Directives

Type/No.	Date	Title and ECP No.	Date Inc.	Remarks
PPC–122	1 Jul 04	First Stage Turbine Vane Metal Blade Track	1 Nov 04	–––

1. **CLEANING**.

a. Follow applicable cleaning procedures outlined in NAVAIR 07–1–503, NAVAIR 07–1–504 and WP 013 00 unless otherwise specifically stated herein.

2. **INSPECTION AND REPAIR**.

3. COMBUSTION CHAMBER INNER CASING.

a. Inspect liner support brackets for cracks. No cracks acceptable.

b. Inspect for wear under liner brackets. Maximum depth is 0.020 in.

c. Inspect body of inner casing for cracks. No cracks acceptable.

d. Inspect for cracks in the front and rear flange attaching welds.

e. Inspect inner casing piston ring grooves for wear. Reject any casing with a groove width in excess of 0.269 in.

f. When sheet metal surfaces of inner casing are pitted by corrosion, clean and refinish area per WP 013 00.

4. COMBUSTION CHAMBER INNER CASING LINER.

a. Inspect front and rear attaching welds for cracks. No cracks acceptable.

b. Inspect body of liner for cracks. No cracks acceptable.

c. Inspect bellows area for cracks. No cracks acceptable.

5. TURBINE FRONT BEARING VIBRATION DAMPER.

a. Assemble a serviceable vibration damper, bearing cage, and bearing support and check as follows:

(1) The vibration damper is not serviceable if a 0.003 in. shim can be inserted between support ID and any damper OD land.

(2) Assemble vibration damper on bearing cage.

(3) Vibration damper is not serviceable if a 0.003 in. shim can be inserted between cage OD and any damper ID land.

b. Key slot width must not exceed 0.426 in.

c. Remove any burrs.

6. TURBINE FRONT BEARING CAGE.

a. Replace bearing cage if front or rear seal ring groove width exceeds 0.285 in.

b. Any wear in bottom of seal ring grooves can be disregarded.

7. TURBINE FRONT BEARING SUPPORT.

a. Inspect front bearing cage for loose or damaged pin. Replace pin or cage as follows:

(1) Replace lock pin, or slotted pin when loose or damaged. (See figure 1.)

(2) The flame plating may be chipped around pin hole diameter in bearing cage to a maximum of 0.060 in.

(3) Replace cage assembly when chipping exceeds limits or is otherwise damaged.

b. Inspect bearing support key slot for damage. Key slot shall not exceed 0.575 in. in width. Sides of key slot shall not contain steps. They must be smooth and square with bottom of key slot.

8. FIRST– AND FOURTH–STAGE WHEEL BEARING JOURNALS.

a. Metallized coating on bearing journals must have a good bond.

b. Coating may be flaked away at either end of bearing journal but must not extend into journal area more than 0.0625 in.

9. TURBINE REAR BEARING SUPPORT.

Materials Required

Specification No./Part No.	Nomenclature
AMS 5782	Wire, welding
AMS 5784	Wire, welding
AMS 5832	Wire, welding
MIL-E-6844, class 6 or 9	Rod, welding
AWS A5.9 or A5.14	Rod, welding
MIL-PRF-680	Solvent, cleaning

a. Inspect sheet metal parts of bearing support for nicks and dents as follows:

(1) Maximum depth is 0.0625 in.

(2) Maximum number of nicks and/or dents is six. More than six nicks or dents, or nicks or dents exceeding 0.0625 in. in depth is cause for assembly rejection. Blend sharp edges on parts that do not exceed the limit.

b. No cracks or weld repair of cracks are permitted (with exception of steps d) on basic structural members, such as front mounting flange ring, struts, bearing housing, and Marman clamp flange. (Severe distortion or misalignment of functional surfaces of assembly could be caused by attempted weld repair.)

CAUTION

Rear turbine bearing support must be removed from power section before attempting any weld repair. Welding support while installed can cause bearing damage and eventual failure due to pitting of the rollers. Pitting of the rollers can result from electrical current arcing across bearings during welding.

c. Weld repair bearing support with heli-arc, using an AWS A5.9 or A5.14 welding rod; or metallic arc using a MIL-E-6844, Class 6 or 9 welding electrode.

d. Cracks outward from all front outer flange bolt holes shall be repaired by sawing a 0.03125-0.0625 in. slot through crack.

e. All other cracks originating from bolt hole must be weld repaired. Refer to step h.

f. Stop-drill cracks before welding using 0.03125 in. drill.

g. Cracks next to the gas tight arc weld between outer cone and Marman clamp flange.

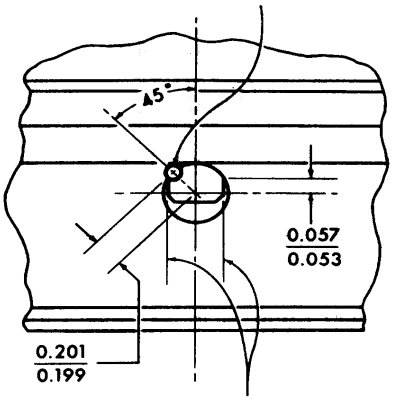

Figure 1. Turbine Front Bearing Cage Pin Replacement

h. Repair cracks in outer cone (except those in the Marman clamp flange areas) as follows:

(1) Grind a V-groove 0.032 in. wide along the crack from outside of outer cone.

(2) The groove shall be ground halfway through outer cone only.

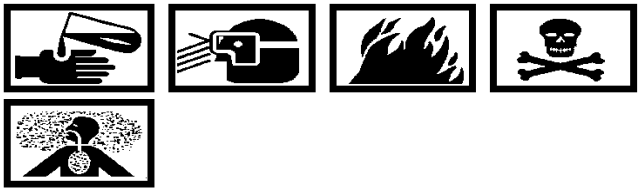

Dry Cleaning Solvent
MIL-PRF-680, Type II **3**

(3) Clean area adjacent to V-groove with a stainless brush and grease dissolving solvent.

(4) During welding, cracks must be backed up by means of a copper bar conforming with inside curvature of outer cone in order to avoid heat concentration and oxidation.

i. Weld cracks except those in step g originating from bolt holes as follows:

(1) V-grind crack area.

(2) Weld repair using inert gas arc and AMS 5782 or 5784 weld wire.

(3) Refer to figure 2 for hole location and dimensions.

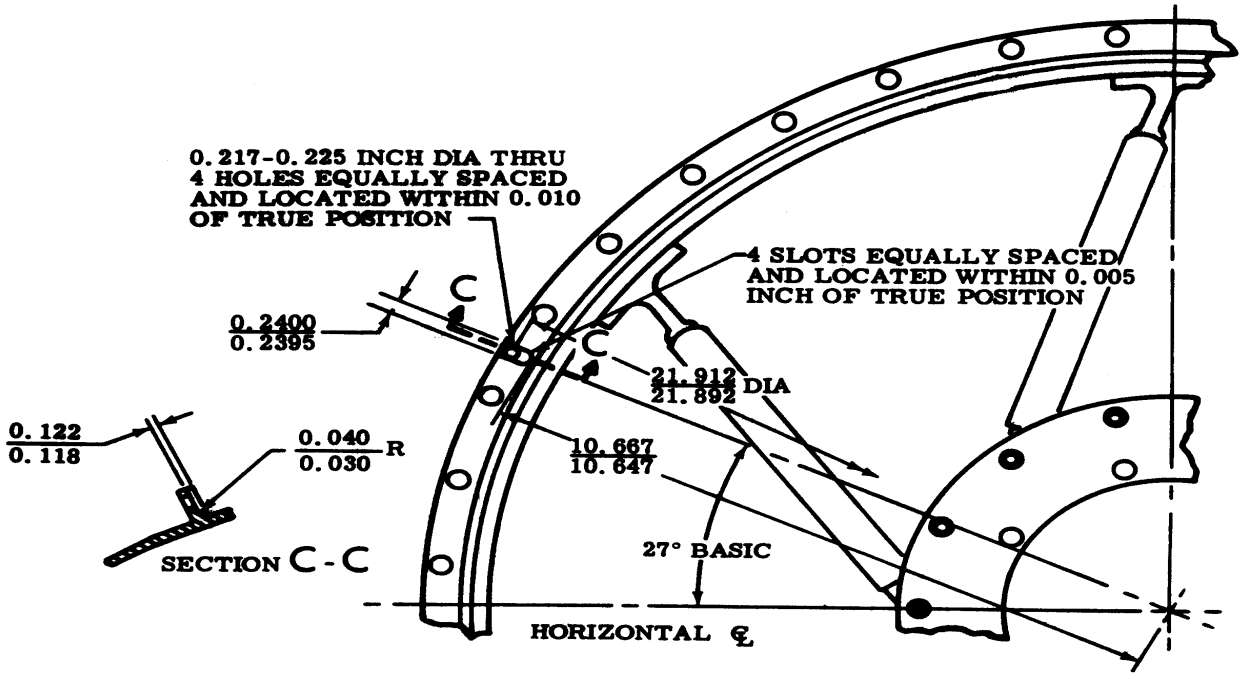

Figure 2. Turbine Rear Bearing Support Front Flange Piloting Key Slot and Hole Repair

(4) Fluorescent penetrant inspect per WP 014 00 after repair.

10. INNER REAR EXHAUST CONE.

Materials Required

Specification No./Part No.	Nomenclature
MIL-E-6844, class 6 or 9	Electrode, welding
AWS A5.9 or A5.14	Rod, welding

a. Inspect exhaust cone for wear as follows:

(1) Wear on Diameter A is acceptable providing the remaining material is at least 0.020 in. thick.

(2) Wear on Diameter B is acceptable providing it does not exceed 0.025 in. deep.

(3) No cracks permitted around bolt holes in mounting bolt flange (3 locations).

b. Inspect dome area for cracks. No cracks acceptable.

c. Repair dome area as follows:

(1) Cracks in dome shall be stop drilled with a 1/32 in. drill and weld repaired.

(2) Repair weld either by metallic arc with a MIL-E-6844, Class 6 or 9, welding electrode or inert arc with an AMS A5.9 or A5.14 welding rod.

d. Radial cracks from radial slots of inner support shall be stop drilled with a 1/16 in. drill provided the crack does not extend through the radius. All other cracks shall be stop drilled and weld repaired.

e. Remove all sharp edges and metal build-up from diameter A and B.

11. TURBINE REAR BEARING CAGE CAP.

Materials Required

Specification No./Part No.	Nomenclature
TT-T-291	Thinner, paint, mineral spirits

a. Inspect oil passages for obstruction.

CAUTION

Drill shall be used in a hand reamer handle or a similar manually–used holder. Use care while running drill into oil passage.

b. Clean passages as follows:

(1) Use a No. 31 (0.120 in. dia) drill to clean the 0.125 in. diameter passage.

(2) Use a No. 51 (0.067 in. dia) drill to clean the 0.070 in. diameter passage.

Paint Thinner TT–T–291 4

(3) Use TT–T–291 mineral spirits to wash out oil passages.

c. Repair fretting wear as follows:

(1) Fretting wear on surface which mates with rear bearing outer ring shall be polished out.

(2) Condemn part when fretting can not be removed by polishing.

12. TURBINE INLET CASING.

Materials Required

Specification No./Part No.	Nomenclature
NS165	Compound, Anti–seize

a. Replace damaged or loose borescope studs as follows: (figure 3)

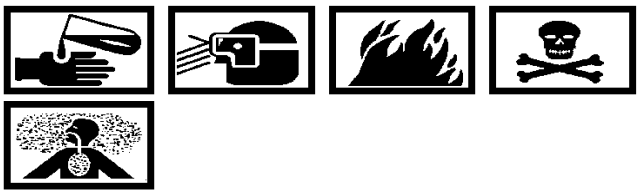

Anti–seize Compound (Never Seez) NS165 32

(1) Apply NS165 to both internal and external threads.

NOTE

Always turn stud in driving direction to obtain correct alignment.

(2) Drive stud, 40–90 lb in., until bottomed on a 0.020 feeler gage placed between stud flange and case.

(3) Remove gage and align stud flanges within limit shown (figure 3). (QA)

b. Cracks outward from front or rear outer flange bolt holes shall be repaired by sawing a 1/32 to 1/16 in. slot through crack.

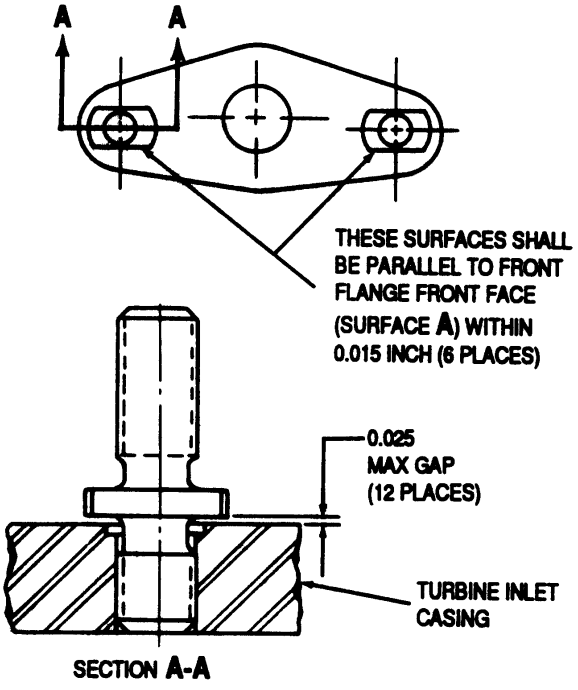

Figure 3. Turbine Borescope Stud Installation

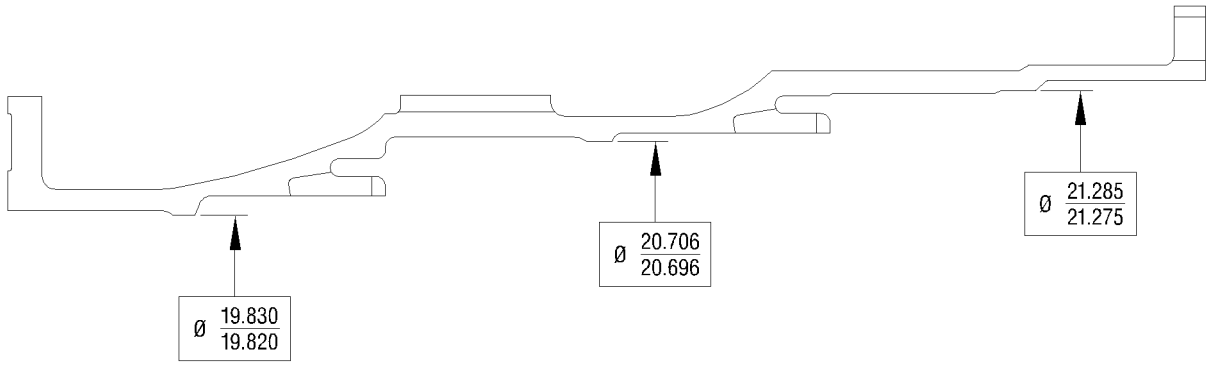

Figure 4. Turbine Vane Case Serviceable Limits

c. Inspect for cracks in key slot area of inlet casing as follows:

(1) Axial cracks in key slot area of casing are acceptable up to but not into thick portion of flange.

NOTE

Key slot cracks may be assessed in the assembled state from the outside of case and are acceptable if they do not extend into the radius/curve of the case flange.

(2) Circumferential cracks are acceptable up to 0.250 in. in length as measured from side of slot.

d. Cracks outward from front or rear flange bolt holes shall be repaired by sawing a 1/32 to 1/16 in. slot through crack.

13. TURBINE VANE CASING.

Support Equipment Required

Part No./Type Designation	Nomenclature
23003269	Fixture, turbine vane casing weld repair

Materials Required

Specification No./Part No.	Nomenclature
AMS 5832	Wire, welding
MIL–E–6844, class 6 or 9	Electrode, welding
AWS A5.9 or A5.14	Rod, welding

a. Locating keys fretted or worn in excess of 0.010 in. must be replaced. There shall be no nicks or dents.

b. Nicks and dents in casing which do not exceed 0.031 in. in depth are acceptable after blending of any sharp edges.

c. Cracks outward from front or rear flange bolt holes shall be repaired by sawing a 0.031–0.062 in. slot through crack.

d. Cracks at corners of key slots that do not exceeds 0.375 in. in length are acceptable.

e. Cracks exceeding 0.375 in. shall be weld repaired by metallic arc using a MIL–E–6844, Class 6 or 9 welding electrode; inert gas arc using an AMS A5.9 or A5.14 welding rod; or gas tight arc weld using an AMS 5832 welding wire.

NOTE

Diameters allowed to serviceable limits only if case limit is met.

f. Reject vane casings that do not conform to serviceable limits as shown in figure 4.

14. FIRST–STAGE TURBINE BLADE ASSEMBLY AND SECOND–, THIRD–, AND FOURTH–STAGE TURBINE BLADES.

Support Equipment Required

Part No./Type Designation	Nomenclature
23032975	Sling, turbine rotor assembly
ZA–43	Kit, inspection, fluorescent dye penetrant

CAUTION

Any blending or stoning of first, second, or third–stage blades will remove the protective coating and render them more susceptible to early corrosion and premature failure.

NOTE

It is not possible to fully describe all of the damage conditions that could be incurred; therefore, if damage is such that even though it is within limits described and there is reasonable doubt about the strength of reworked blade as compared to a new blade, replace turbine rotor.

a. Refer to table 1 for inspection and repair limits.

b. Fluorescent penetrant inspect blades per WP 014 00.

c. First–stage turbine blades have a anti–corrosive coating. Without this coating, these blades are very susceptible to corrosion. Normally, when minor nicks or dents are found on these blades, this damage would be blended and/or polished to leave a smooth finish. Blending also removes coating, thus exposing the bare blade material to corrosion. Since corrosion is more detrimental to blade life than minor physical damage, the following limits have been established:

(1) If more than 10 percent of blades in any one stage would require repair to approximately the maximum limits, the rotor must be replaced.

(2) Since fourth–stage turbine blades are not coated, it is permissible to repair these blades according to the limits shown in table 1 and figure 8.

(3) Fourth–stage blade blended areas must not extend into radius at base or shroud. The following requirements must be met.

(a) After repair, the blade width in area of rework must not be less than original width.

(b) All polishing marks must be in a longitudinal direction.

(c) No sharp edges, cracks or tears in surface are allowable after rework.

(d) Remove as little blade material as possible.

d. Use 23032975 turbine rotor sling to handle a rejected turbine rotor.

15. TURBINE VANE ASSEMBLIES.

Support Equipment Required

Part No./Type Designation	Nomenclature
ZA–43	Kit, inspection, fluorescent dye penetrant

CAUTION

Any blending or stoning of first, second or third–stage vane gas path surfaces will remove the protective coating and render them more susceptible to early corrosion and premature failure.

a. Refer to tables 3 and 4 and figures 9 through 15 for inspection and repair limits.

b. Fluorescent penetrant inspect vane assemblies per WP 014 00.

Table 1. First–stage Turbine Blade Assembly and Second–, Third–, and Fourth–stage Blades – Inspection and Repair

Condition	Serviceable Limits	Repairable Limits	Disposition
Undercutting at base of blades.	Not serviceable.	Not repairable.	Reject turbine rotor.
Broken blades.	Not serviceable.	Not repairable.	Reject turbine rotor.
FPI indications.	Not serviceable.	Not repairable.	Reject turbine rotor.
Obstructed cooling air passages in trailing edge (First–stage).	Not serviceable.	Any amount.	Clean air passages.
Obstructed cooling air holes in impingement tube (First–stage).	Not serviceable.	Not repairable.	Reject turbine rotor.
Overtemperature (exceeded 1706°F (930°C).	Not serviceable.	Not serviceable.	Reject turbine rotor.
Heat scale or deposits.	Area is smooth to touch after cleaning. No bleedback of fluorescent penetrant inspection. Inspect for bleedback by cleaning the area with soft eraser (pencil type) and reapplying ZP–4 powder by dusting.	Not serviceable.	Reject turbine rotor.
Burns or deformation.	Not distorted, badly pitted, scaled, eroded or showing untwisting neckdown in airfoil section.	Not repairable.	Reject turbine rotor.
Coating on all areas of First–stage blade assembly and second– and third–stage blades.	No coating loss to expose base material allowed.	Not repairable.	Reject turbine rotor.
Nicks and dents in leading and trailing edges.	Not serviceable.	Not repairable.	Reject turbine rotor.
Minute damage in lower 1/3 of airfoil and fillet radius of first– through third–stage blades.	Small dents within pit limits of table 2. No scratches allowed.	See Disposition.	Reject turbine rotor.
Minute damage in lower 1/3 of airfoil and fillet radius of fourth–stage blades.	Not serviceable.	Minute scratches or small dents.	Lightly stone or polish only if dimensions are basically unchanged.

Table 1. First–stage Turbine Blade Assembly and Second–, Third–, and Fourth–stage Blades – Inspection and Repair (cont)

Condition	Serviceable Limits	Repairable Limits	Disposition
Nicks and dents in surface areas of airfoil:			
First– through third–stage blades.	Small dents and nicks within pit limits of table 2. Combined total of nicks and dents shall not exceed total allowable pit limits.	Not repairable.	Reject turbine rotor.
Fourth–stage blades.	Not serviceable.	Refer to figure 8.	Blend sharp edges only. No repair in lower 1/3 or airfoil and fillet radius.
Tip rub damage (first–stage).	Tip rub damage allowed in area F (figure 5) such that a minimum rotor diameter of 18.456 inches is maintained near blade leading edge. Tip rub damage near the trailing edge shall not extend below area F. Any amount of coating loss is allowed in area F.	Not repairable.	Reject turbine rotor.
Shroud Z notch hardface surfaces wear (second–, third–, and fourth–stages)	Not serviceable.	Not repairable.	Reject turbine rotor.
Erosion of blade shroud seal knives on second–, third–, and fourth–stage blades. Refer to figure 7.	Area A: (all) 0.100 in. maximum.	Not repairable.	Reject turbine rotor.
	Area B: (second–stage) complete hardface coating on each knife edge.	Not repairable.	Reject turbine rotor.
	Area B: (third– and fourth–stages) knife edges may be worn to a sharp edge.	Not repairable.	Reject turbine rotor.
NOTE Early stages of sulfidation is evidenced by a rough or crusty appearance of the blade airfoil. Advanced stages of this condition is evidenced by splitting, delamination, separating, flaking or loss of material.			
Corrosion (sulfidation) of airfoil (first– and second–stages).	Not serviceable.	Not repairable.	Reject turbine rotor.

Table 1. First–stage Turbine Blade Assembly and Second–, Third–, and Fourth–stage Blades – Inspection and Repair (cont)

Condition	Serviceable Limits	Repairable Limits	Disposition
Oxidation or erosion:			
Leading and trailing edges (first– through third–stages).	No loss of coating to expose base material.	Not repairable.	Reject turbine rotor.
Leading and trailing edges (fourth–stage).	Not serviceable.	Not repairable.	Reject turbine rotor.
Airfoils (first– through third–stage blades).	No loss of coating to expose base material.	Not repairable.	Reject turbine rotor.
Airfoil (fourth–stage blades).	Not serviceable.	Not repairable.	Reject turbine rotor.
Flaking (first– through third–stages).	Light and scattered provided no area exceeds 1/4 in. diameter, not located in lower 1/3 of airfoil and base material not exposed.	Not repairable.	Reject turbine rotor.
Crazing or grain boundary oxidation.	No bleedback of fluorescent penetrant. Inspect for bleedback by cleaning the area with soft eraser (pencil type) and applying ZP–4 dry developer by dusting.	Not repairable.	Reject turbine rotor.
Bow in blade.	0.060 in. max deviation at point of max deflection.	Not repairable.	Reject turbine rotor.
Porosity (porous surface impressions) in airfoils and leading and trailing edges (first– through third–stages).	Individual impressions not exceeding pit limits of table 2.	Not repairable.	Reject turbine rotor.

Table 2. First– and Second–stage Turbine Blade Coating – Serviceable Limits (Refer to Figures 5 and 6)

Condition	Area	Maximum Number	Maximum Size (In.)	Minimum Separation (In.)
Covered spits (Limits for exposed spits same as chipping)	All	Any amount	0.010	3/8
	A (LE)	2	0.020	3/8
	A (TE)	2	0.020	3/8
	B	2 per side	0.020	3/8
	C	2	0.030	1/4
	D	Any amount	0.030	1/4
	E	None	––	––
Pits (Individual)	All	Any amount	0.010	3/8
	A (LE)	4	0.020	3/8
	A (TE)	4	0.020	3/8
	B	6 per side	0.020	3/8
	C	Any amount	0.030	1/4
	D	Any amount	0.030	1/8
	E	Any amount	0.030	1/8
Chipping, spalling, and exposed spits	A	None	––	––
	B	None	––	––
	C	None	––	––
	D	2 per side	0.030	1/4
	E	None	––	––

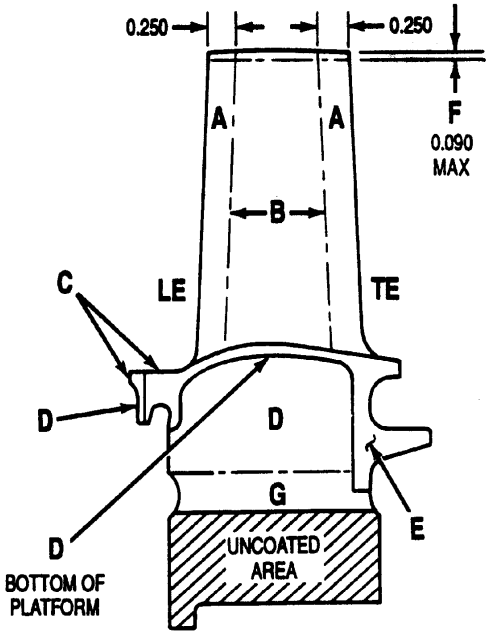

NOTES:

1. AREAS **A** AND **B** EXTEND THROUGH FILLET RADIUS TO TANGENCY POINT WITH PLATFORM
2. AREA **C** INCLUDES TOP AND UNMACHINED EDGES OF PLATFORM
3. AREA **D** INCLUDES STALK SURFACES AND BOTTOM OF PLATFORM
4. ARES **E** INCLUDES MACHINED EDGES OF PLATFORM
5. AREA **F** IS OVERSPRAY AREA OF LCO – 17K COATING (REFERENCE)
6. AREA **G** IS 0.000 – 0.0025 INCH THICKNESS TAPER OF CoCrAlY COATING (REFERENCE)

1ST STAGE

Figure 5. First–stage Turbine Blade Assembly Coating – Visual Inspection Areas

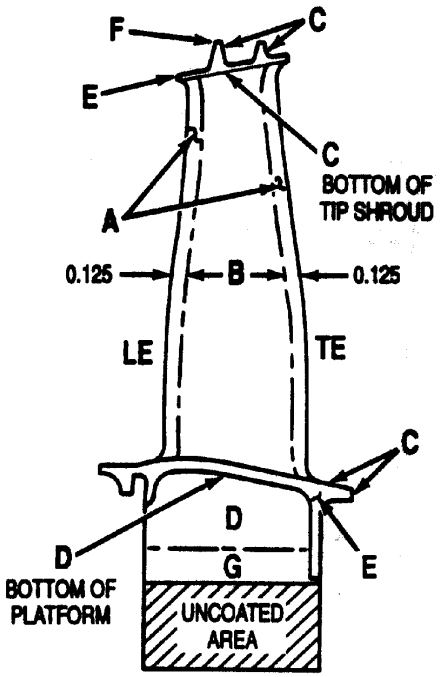

NOTES:

1. AREAS **A** AND **B** EXTEND THROUGH FILLET RADII TO TANGENCY POINT WITH PLATFORM AND TIP SHROUD
2. AREA **C** INCLUDES BOTTOM OF TIP SHROUD, TOP AND UNMACHINED EDGES OF TIP SHROUD ANDPLATFORM
3. AREA **D** INCLUDES STALK SURFACES AND BOTTOM OF PLATFORM
4. ARES **E** INCLUDES MACHINED EDGES OF PLATFORM AND TIP SHROUD
5. AREA **F** IS AREA OF PERMISSIBLE OVERSPRAY OF CoCrAIY OVER– L103 COATING (REFERENCE)
6. AREA **G** IS 0.000 – 0.005 INCH THICKNESS TAPER OF CoCrAIY COATING (REFERENCE)

2ND AND 3RD STAGES

Figure 6. Second– and Third–stage Turbine Blade Coating– Visual Inspection Areas

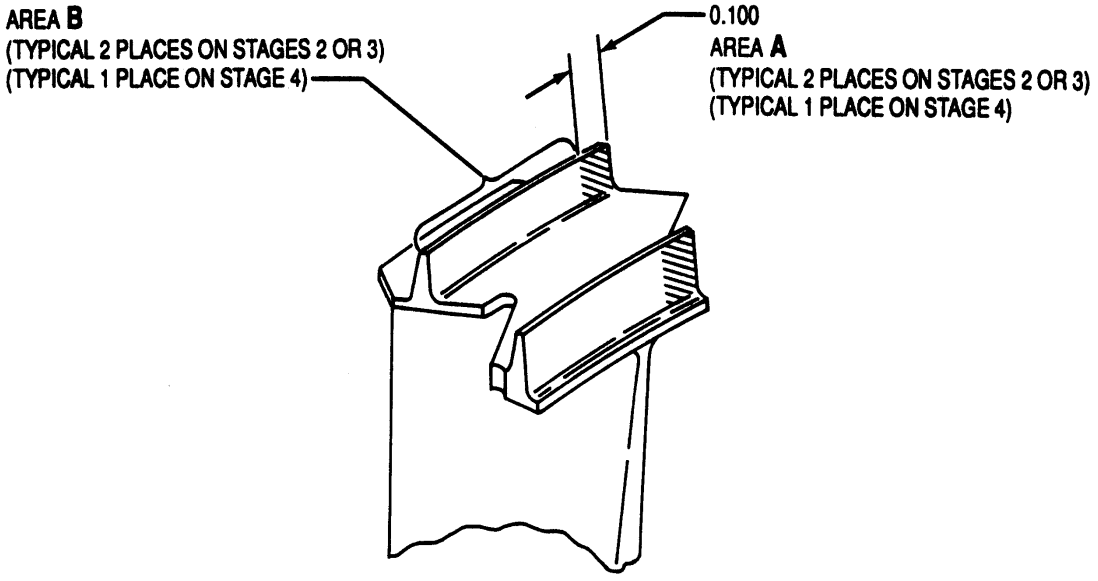

Figure 7. Second–, Third–, and Fourth–stage Turbine Blade Shroud – Seal Knives Erosion

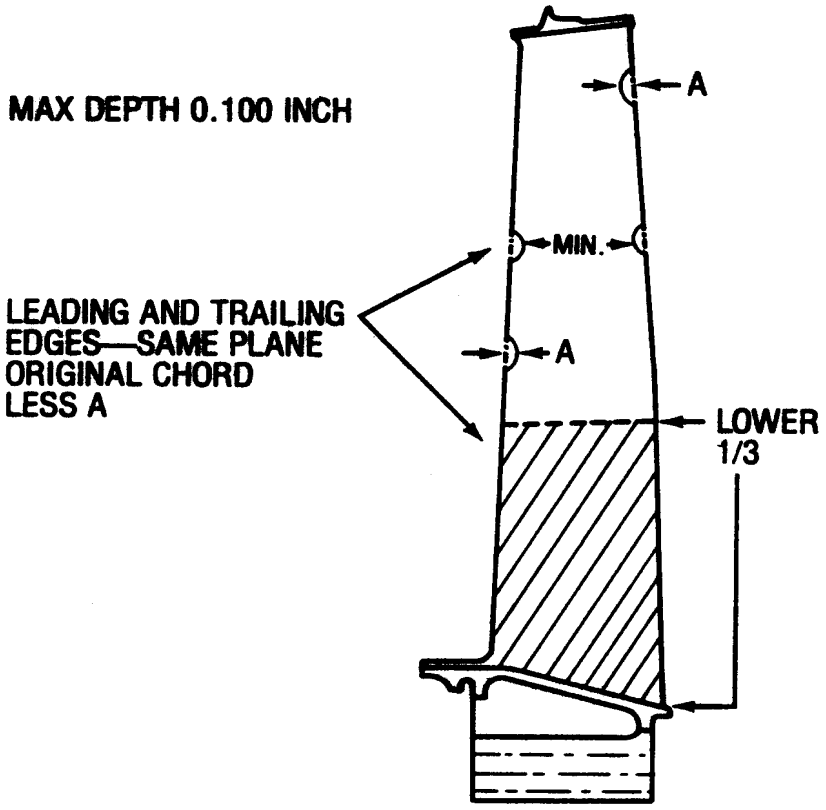

Figure 8. Turbine Fourth-stage Blade Rework Limits

Table 3. Turbine Vane Assemblies–Inspection and Repair

Condition	Serviceable Limits	Repairable Limits	Disposition
CAUTION Blending surface area is not authorized. Blending will remove anti–corrosive protection and accelerate turbine vane degradation or failure.			
Nicks or dents on first, second and third–stage vanes.	See figures 9, 11, and 13. See “CAUTION” note above.	See “CAUTION” note above.	Condemn part exceeding serviceable limits.
Nicks or dents on fourth–stage vanes.	See figure 13.	Any amount.	Remove sharp edges by blending. Condemn part exceeding serviceable limits.
NOTE Early stage of sulfidation is evidenced by a rough or crusty appearance of the vane airfoil. Advanced stage of this condition is evidenced by splitting, delamination, separating, flaking, or loss of material.			
Corrosion (sulfidation) vane airfoil.	Not serviceable.	Not repairable.	Reject vane assembly.
Coating:			
Chipped, eroded, worn, or blended first– and second–stage vanes.	Vane airfoil and inner and outer bands must have 100% coating.		Reject vane assembly.
Third–stage vanes.	Vane airfoil and inner and outer bands must have 100% coating.		Reject vane assembly.
Corrosion of the vanes inner or outer band and first–stage vane saddle.	Not to exceed 50% of material thickness.	Not repairable.	Reject vane assembly.
Metal deposits on vanes.	Not serviceable.	Any metal deposits.	Blend metal deposits from vanes. Do not damage coating.
Fretting wear:			
Liner mating surface (first–stage).	Not to exceed 1/2 of original material thickness.	Not repairable.	Reject vane assembly.
Saddle.	0.040 in. of stock remains.	Not repairable.	Reject vane assembly.
Wear of outer band ID and inner band OD (erosion, scoring, rubbing, etc).	0.0313 in. max depth.	Any metal buildup.	Remove metal build–up. Reject vane segment that exceed serviceable limits.

Table 3. Turbine Vane Assemblies–Inspection and Repair (cont)

Condition	Serviceable Limits	Repairable Limits	Disposition
NOTE Power Plant Change 122 replaces stage 1 turbine vane ceramic blade track material with either a new metal track or reworked braze–taped metal blade track (P/N: 23073823, 23073824, 23073825). Braze–taped metal tracks may appear cracked along the blade track's forward edge and aft of the vanes' trailing edge, see Figure 10A. If the borescope operator is uncertain about crack indications, contact the T56 In Service Support Center.			
Erosion, oxidation or wear on blade track.	See figures 10, 12, 14, and 15.	Not repairable.	Reject vane assembly.
Cracks: Inner and outer bands, any location.	First–stage: figure 9. Second–stage: figure 11. Third– and fourth–stage: figure 13.	Not repairable.	Reject vane assembly.
NOTE Replace all fuel nozzles when there is any melting of vanes in any turbine vane segment.			
Melting or disintegration.	Not serviceable.	Not repairable.	Reject vane assembly.

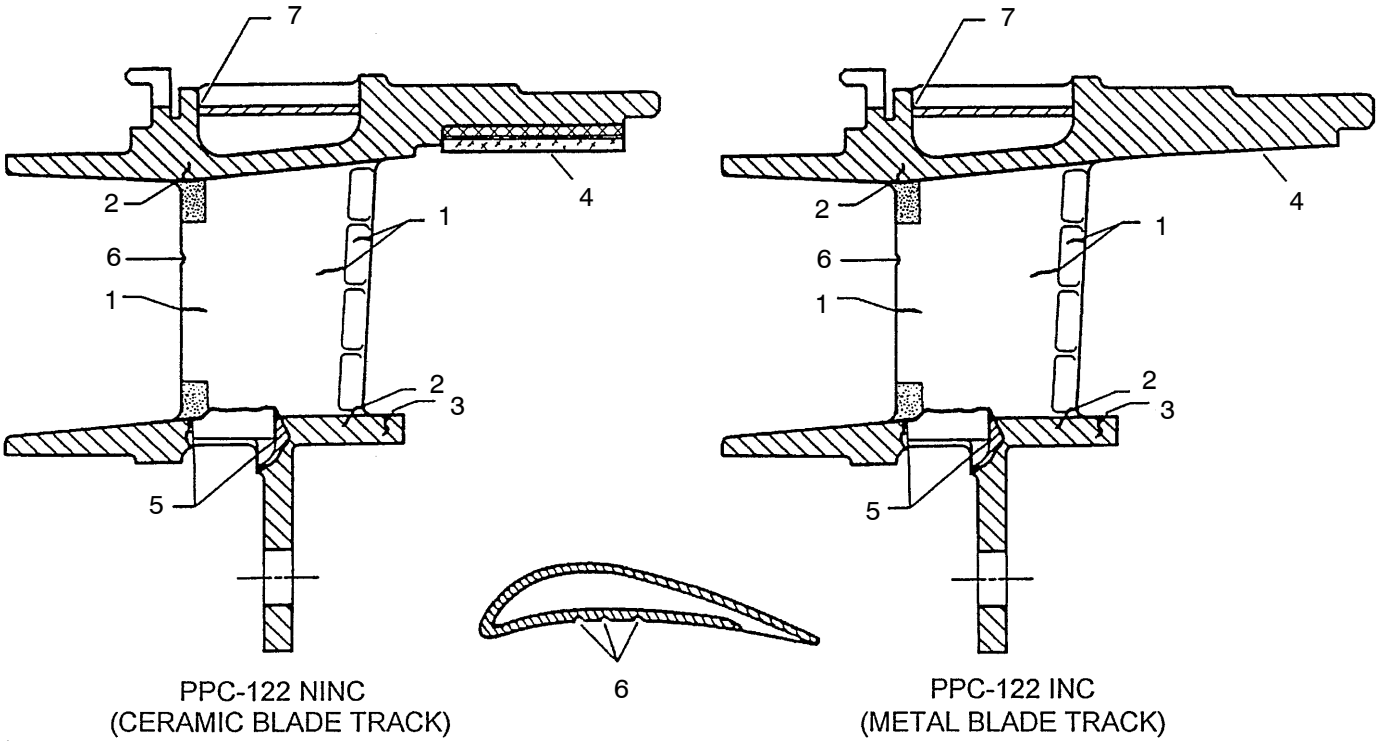

Ref No.	Condition/Area	Serviceable Limits
1	Axial Cracks––vane leading or trailing edges.	(1) Cracks that do not exceed a length of 0.125 in. are acceptable in either or both sides of airfoil. Cracks that start at the leading edge may progress rearward across airfoil to a maximum length of 0.125 in. (2) No cracks exceeding 0.250 in. in trailing edge. (3) Cracks must be separated by a distance equal to the length of the longer of two cracks. Direction of progress must not cause metal breakout. (4) Cracks must be of sufficient tightness so that the airfoil internal surface is not visible.

Figure 9. First–Stage Turbine Vane Damage Limits (Sheet 1 of 2)

Ref No.	Condition/Area	Serviceable Limits
2	Fillet Cracks––between vanes at inner or outer band.	(1) No cracks exceeding 0.375 in. in length when measured radially along airfoil. (2) Cracks must be of sufficient tightness so that the airfoil internal surface is not visible.
3	Inner and Outer Band Cracks.	No limit to number. Outer band circumferential cracks permissible up to 0.500 in.
4	Blade Track.	See figure 10.
5	Impingement Tube Weld Joint.	(1) No cracks. (2) No loss of seal between tube and band.
6	Nicks and Dents––vane airfoil.	Any number, 0.031 in. deep. No holes through walls.
7	Welded Cap.	(1) No cracks in cap. (2) No loss of seal between outer band and cap.

Figure 9. First–Stage Turbine Vane Damage Limits. (Sheet 2 of 2)

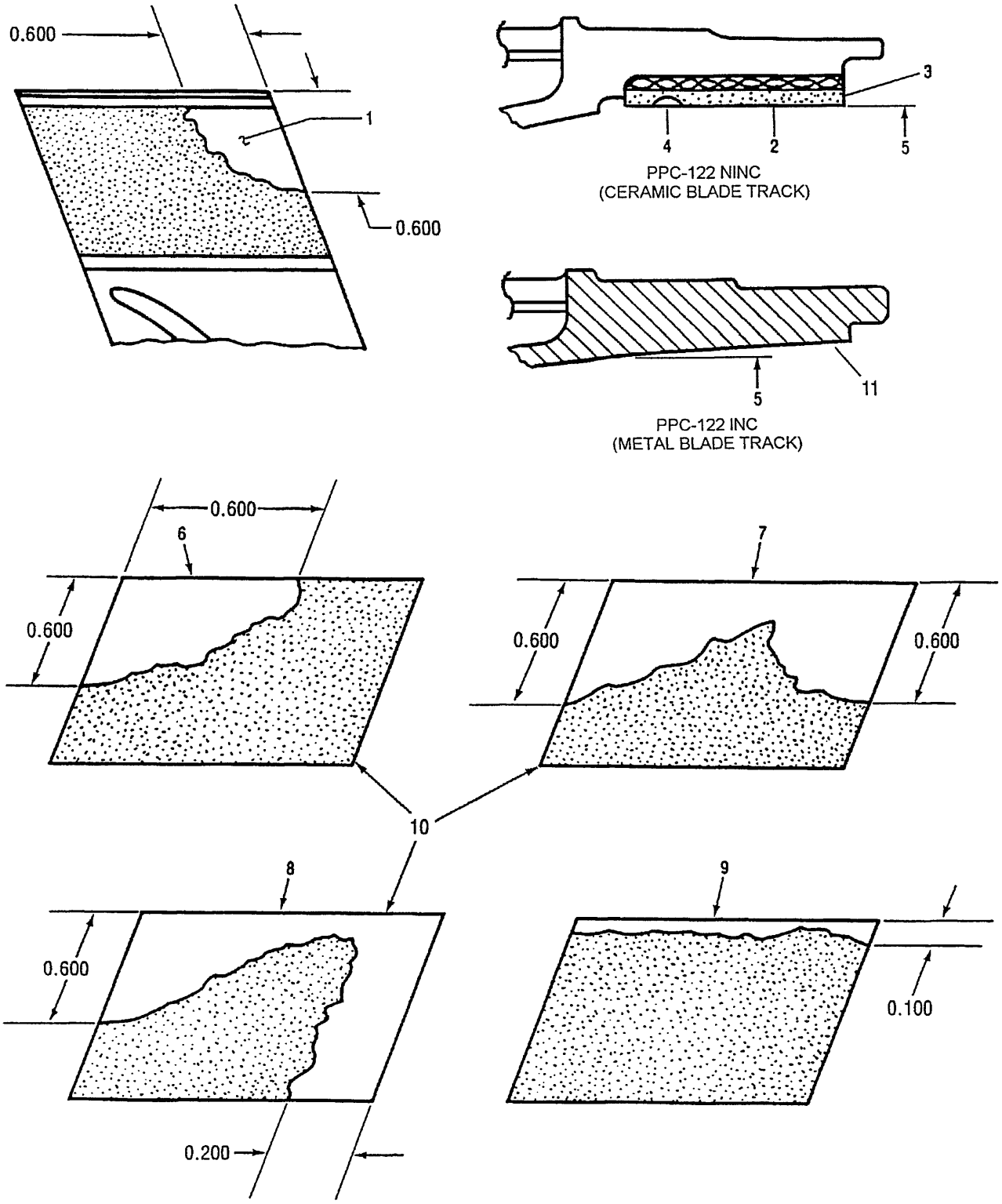

Figure 10. Turbine First-stage Blade Track Wear Limits (Sheet 1 of 3)

NOTE

If discrepancies exceed the limits stated below, the inlet case assembly containing the forty–two first–stage vanes, first–stage vane support and hardware must be returned to the overhaul facility for repair.

Ref. No.	Condition	Max Serviceable Limits
1	Edge Chips	(1) No chip to exceed 0.600 x 0.600 in. area. (2) One chip permitted per edge. (3) No brunsbond pad visible
2	Radial Cracks	Any number permitted
3	Transverse Cracks	None permitted
4	Nicks	Any number, but sufficient thickness so that brunsbond pad is not visible.
5	Radial Dimension (measurements in turbine inlet assembly)	Ceramic Blade Track Range: 9.248 – 9.258 in. Metal Blade Track Range: 9.261 – 9.270 in. (from leading edge)
6	Corner Chips	Up to 0.6 x 0.6 square in. are permitted. Strain isolator pad by be visible. Maximum of 21 per set.
7	Double Corner Chips	Strain isolator pad may be visible. Maximum of 10 per set.
8	Leading Edge Breakthrough (With or Without Corner Chips)	Up to 0.6 x 0.6 square in. corner chip permissible with leading edge breakthrough. The maximum width of the breakthrough is 0.2 in. Maximum of 4 per set.
9	Trailing Edge Damage	Extending no further than 0.1 in. into the blade track permitted along the entire width. No maximum limit per set.
10	Multiple Conditions	If vane segments exhibit more than one type of condition 6, 7 or 8, the maximum number of effected vane segments shall not exceed 25.
11	Wear and Scoring	None permitted
12	Braze–Taped Blade Track–crack appearance	Any number permitted if PPC 122 braze–taped configuration is identified and referenced per the Figure 10, Sheet 3, blade track location.

Figure 10. Turbine First–stage Blade Track Wear Limits (Sheet 2 or 3)

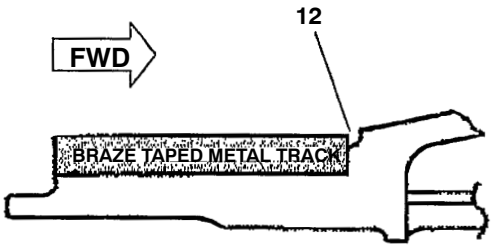

NOTE:

BORESCOPE SCREEN PROVIDES MAGNIFIED AND MIRRORED IMAGES.

BRAZE TAPE METAL TRACK MAY APPEAR CRACKED ALONG THE TROUGH AREA, CAUSING FALSE REJECTS. IF THE BORESCOPE OPERATOR IS UNCERTAIN DURING THIS INSPECTION, CONSULT WITH T56–427 FST.

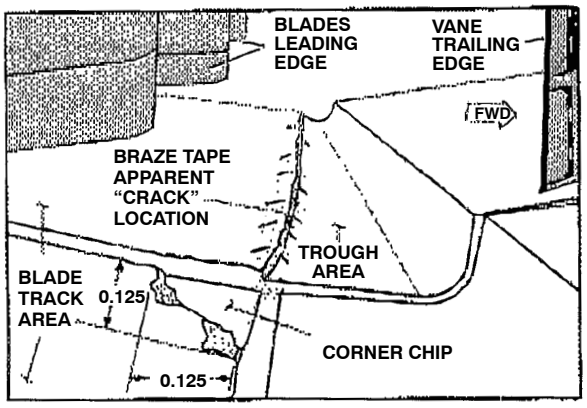

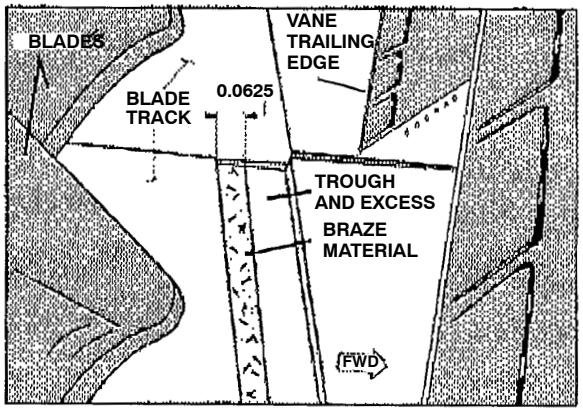

Figure 10. Turbine First–stage Blade Track Wear Limits (Sheet 3 of 3)

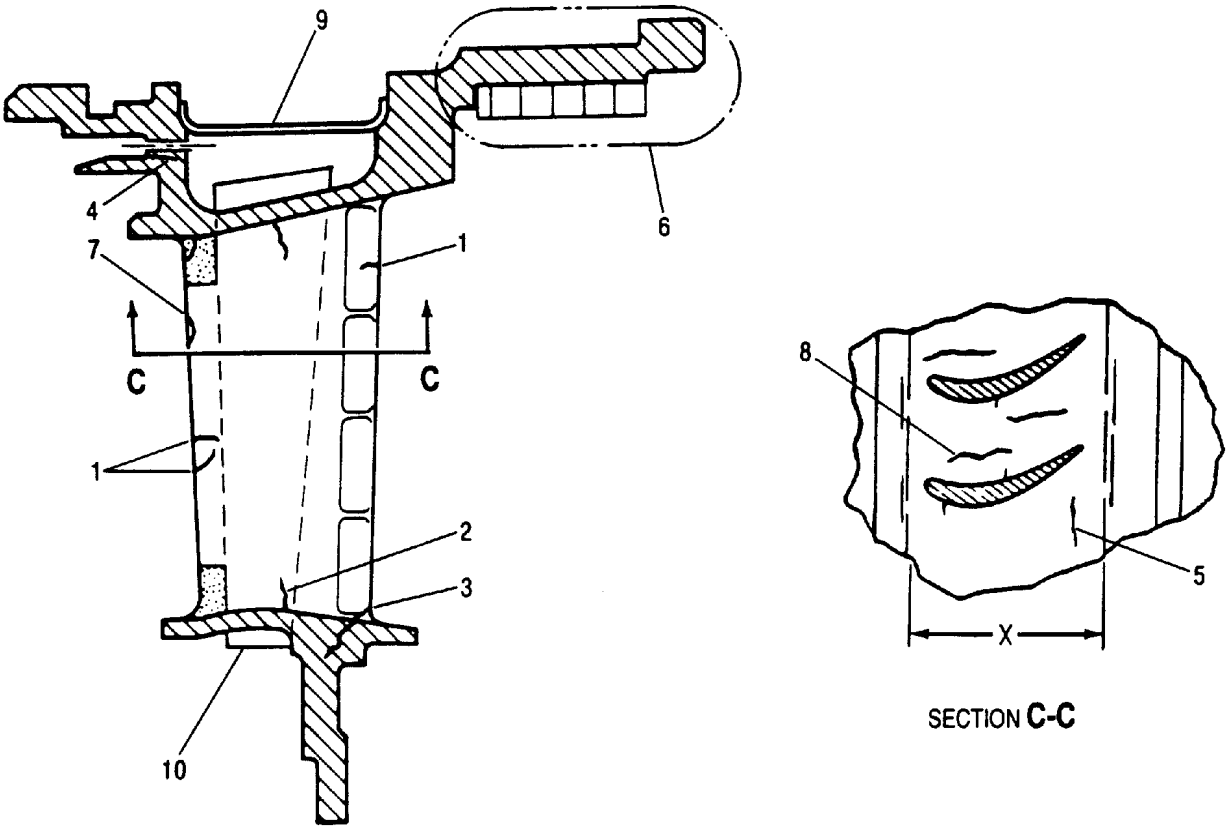

Ref No.	Condition/Area	Serviceable Limits
1	Axial Cracks––vane leading or trailing edges.	(1) No cracks exceeding 0.125 in. in leading edge. (2) No cracks exceeding 0.375 in. in trailing edge. (3) Cracks must be 0.125 in. apart and progression must not cause metal breakout. (4) Cracks must be of sufficient tightness so that the airfoil internal surface is not visible.
2	Radial Cracks––airfoil.	(1) No cracks exceeding 0.500 in. in length. (2) Cracks must be of sufficient tightness so that the airfoil internal surface is not visible.

Figure 11. Second–Stage Turbine Vane Damage Limits (Sheet 1 of 2).

Ref No.	Condition/Area	Serviceable Limits
3	Fillet Cracks––between vane and inner or outer band.	(1) No cracks exceeding 0.500 in. in length when measured radially along airfoil. (2) Cracks must be of sufficient tightness so that the airfoil internal surface is not visible.
4	Outer Band Cracks–– vane cooling air openings.	No limit to number or length of cracks.
5	Outer Band Circumferential Cracks.	No cracks permissible.
6	Blade Track.	See figure 12.
7	Nicks and Dents––vane airfoil.	Any number 0.031 in. deep, but cracks must be of sufficient tightness so that the airfoil internal surface is not visible.
8	Axial cracks in outer band.	Any number permitted in Distance X. Reject part if cracks break over edge.
9	Welded Cap.	(1) No cracks in cap. (2) No loss of seal between outer band and cap.
10	Wear and Scoring	None permitted.

Figure 11. Second–Stage Turbine Vane Damage Limits. (Sheet 2 of 2).

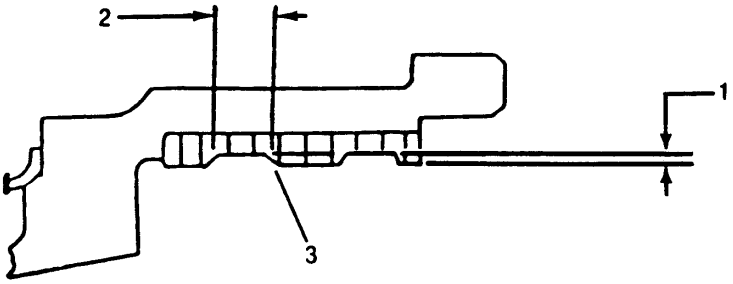

Ref No.	Area/Condition	Serviceable Limits
1	Groove Depth, two places.	0.036 in. max depth.
2	Groove Width, two places.	1/4 in. max width.
3	Erosion.	Slight spiking of honeycomb permitted.

Figure 12. Turbine Second–Stage Blade Track Wear Limits

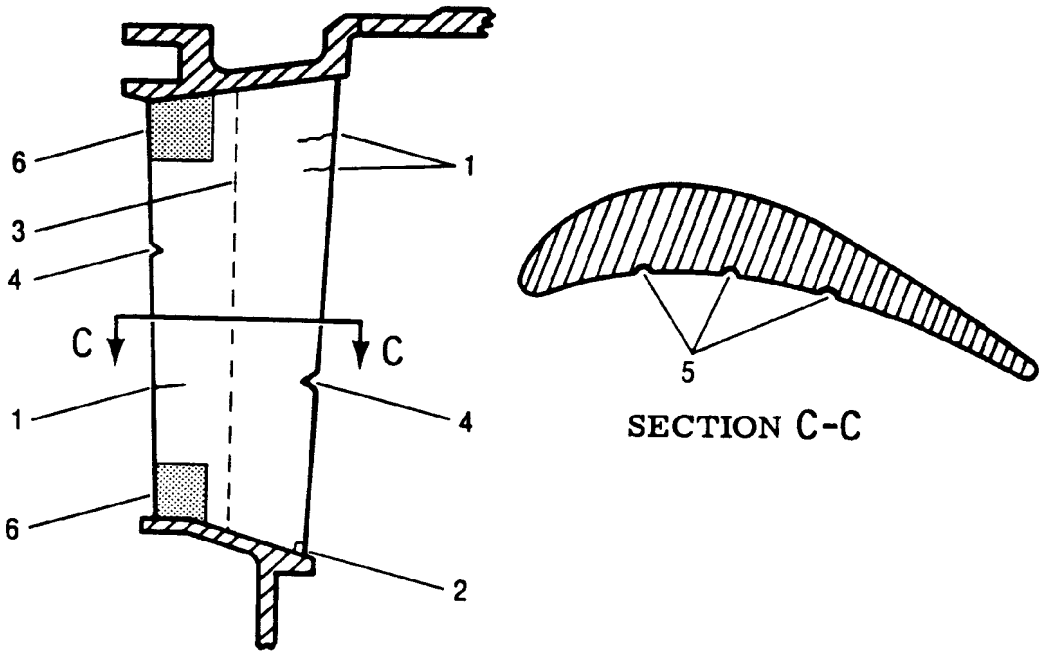

Ref No.	Condition/Area	Serviceable Limits
1	Axial Cracks––vane leading or trailing edges.	(1) Any number of cracks, less than 0.200 in. long, if direction of progress will not cause metal breakout. (2) No crack exceeding 0.250 in. long in leading edge or trailing edge. (3) Cracks over 0.250 in. long must be at least 0.313 in. apart and not in the same plane with such cracks in the opposite edge of the vane.
2	Fillet Cracks–between vane and inner or outer band.	(1) Crack may extend through band and progress up to 0.250 in. long. (2) Adjacent vanes may have fillet cracks but crack must not extend through band.

Figure 13. Third– and Fourth–Stage Turbine Vane Damage Limits (Sheet 1 of 2)

Ref No.	Condition/Area	Serviceable Limits
3	Vane Distortion (Bowing).	Any number, 0.094 in. deep max.
4	Nicks and Dents–vane leading and trailing edges.	Any number, 0.188 in. deep max.
5	Nicks and Dents–vane contour.	Any number, 0.063 in. deep max.
6	Erosion –Fourth–stage vanes only (in area shown).	
	a. Vane airfoil.	Not in excess of 0.031 in. deep.
	b. Vane leading edge.	Not in excess of 0.094 in. in depth and 1/3 the total vane height or confined to an area 0.500 in. radially from inner and outer bands, 0.375 in. axially from leading edge and width of airfoil section. Not in excess of 50% of band thickness.
7	Blade Track.	See figure 14 (Third–stage) or figure 15 (Fourth–stage).

Figure 13. Third– and Fourth–Stage Turbine Vane Damage Limits (Sheet 2 of 2)

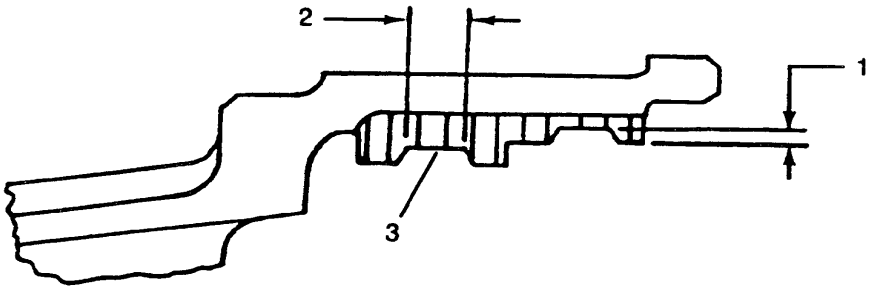

Ref No.	Area/Condition	Serviceable Limits
1	Groove Depth (2 Places).	0.029 in. max depth.
2	Groove Width.	1/4 in. max width.
3	Erosion.	Slight spiking of honeycomb permitted.

Figure 14. Turbine Third–Stage Blade Track Wear Limits

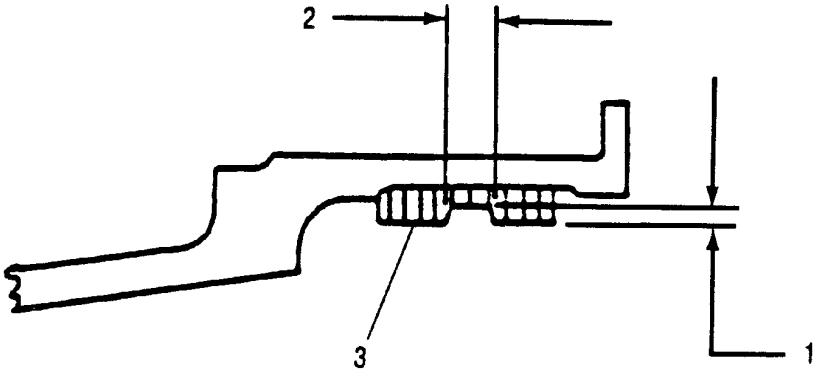

Ref No.	Area/Condition	Serviceable Limits
1	Groove Depth.	0.035 in. max depth.
2	Groove Width.	1/4 in. max width.
3	Erosion.	Slight spiking of honeycomb permitted.

Figure 15. Turbine Fourth–Stage Blade Track Wear Limits

16. TURBINE COUPLING SHAFT. Replace coupling shaft assembly and couplings if there is spline wear or other critical damage.

17. TURBINE BEARINGS. Refer to NAVAIR 01–1A–503 for bearing inspection procedures.

18. TURBINE UNIT OIL PASSAGES.

CAUTION

Cleaning shall not enlarge oil passage. If it is apparent that the drill will remove parent metal from passage, replace with a smaller drill.

a. Install drills for cleaning passages in a hand reamer handle or a similar manually–used T–handle.

b. Inspect the oil jets and passages to ensure they are open and clear of sludge, carbon, or any other foreign matter.

19. TURBINE TO COMPRESSOR TIE BOLT.

a. Visually inspect tie bolt for cracks, corrosion, wear on pilot diameters, and plugged oil passage holes.

b. Return tie bolt to overhaul, if any of the following conditions are found:

(1) Cracks in any area.

(2) Corrosion pitting in shank area which exceeds 0.010 in. in depth.

(3) Pilot diameter wear, or pitting in excess of either the maximum wear depth limit or minimum serviceable diameter limit (figure 16).

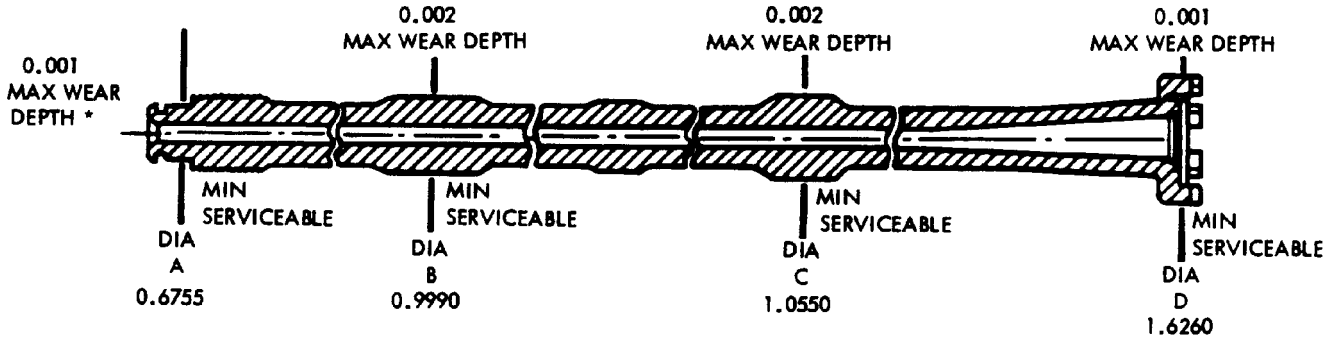

WEAR DEPTH MEASUREMENTS ARE MADE BETWEEN ADJACENT HEIGHTS, BETWEEN A WORN AND UNWORN SURFACE, ON A MUTE DIAMETER.

Figure 16. Turbine to Compressor Tie Bolt Serviceable Limits

INTERMEDIATE MAINTENANCE

ASSEMBLY

TURBINE UNIT

Reference Material

None

Alphabetical Index

Subject	Page No.
Assembly	2
Combustion Chamber Inner Casing, Inner Casing Liner, and Oil Tubes Installation	16
Rear Turbine Bearing Support Assembly	2
Turbine Front Bearing Support and Cage Assembly	11
Turbine Front Labyrinth Seal, Bearing, and Coupling Shaft Assembly	13
Turbine Inlet Casing Assembly	10
Turbine Rear Bearing Clamp Nut Installation	15
Turbine Rotor and Vane Assembly	7
Turbine Rotor Axial Clearance Check	16

Record of Applicable Technical Directives

None

1. **ASSEMBLY.**

2. REAR TURBINE BEARING SUPPORT ASSEMBLY.

Support Equipment Required

Part No./Type Designation	Nomenclature
23033000	Adapter, attaching, turbine unit to 6799764 adapter
23033001	Adapter, supporting, power section to parallel rail system
6795905	Stand, turnover, engine component
6796980	Adapter, rotating, engine component to parallel rail stand
6798242	Retainer, turbine rear bearing rollers
6799764	Adapter, attaching, engine component to parallel rail stand
--	Wrench, torque (0-150 lb in.)
--	Gage, feeler
--	Micrometer, (0-1 inch)
--	Micrometer, inside

Materials Required

Specification No./Part No.	Nomenclature
MIL-PRF-23699	Oil, lubricating
SAE-AMS-M-7866	Molybdenum Disulfide
MS20995C32	Lockwire, 0.032 inch
MS9141-05	Gasket, metal O-ring (3)
MS9142-019	Gasket, metal O-ring
MS9204-099	Gasket
Permatex 1372 or Loctite 30588	Sealant
1	Fluid, assembly
VV-P-236	Petrolatum
DOD-L-25681	Oil, Lubricating

a. Install rear turbine bearing support (51, figure 1) in work stand as follows:

(1) Install 23033000 attaching adapter to rear bearing support (51). (See figure 2.)

(2) Install rear bearing support (51) in 6795905 (figure 3) component turnover stand or 6796980 (figure 4) rotating adapter on parallel rail maintenance stand using 6799764 (figure 5) engine component attaching adapters.

(3) Turn the rear turbine bearing support (51, figure 1) to horizontal position in stand.

b. Install inner forward flow path shroud (48). Torque bolts (49) to 35-40 lb in. and lockwire. (QA)

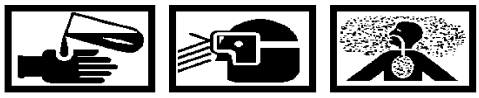

Assembly Fluid 1 **52**

c. Install small metal O-ring gasket (44) on front face of inner rear turbine bearing support flange (51) at oil passage. Hold the metal O-ring gasket in place with Ultrachem #1 assembly fluid or Petrolatum.

WARNING

Super-chilled (frozen parts) will cause freezer burn. Use clean insulated gloves to handle dry ice and frozen parts.

d. Chill rear bearing cage (55) to 0° F (-18° C) using dry ice, if necessary, and install in rear turbine bearing support. (Be sure oil passages and bolt holes are aligned.) Cage-to-bearing support fit shall be 0.0000 - 0.0035L. (QA)

Petrolatum Lubricant VV-P-236 **33**

e. Install large metal O-ring gasket (47) on rear face of rear bearing oil seal (46). Hold gasket in place with Petrolatum (VV-P-236).

f. Install oil seal (46) on Inner Flange Front Face of rear turbine bearing support (51). (Be sure oil holes are aligned.)

Lubricating Oil, MIL–PRF–23699 2

NOTE

All hot section bolts are to have MIL–PRF–23699 lubricating oil applied to threads prior to assembly when no other specific lubricant is directed.

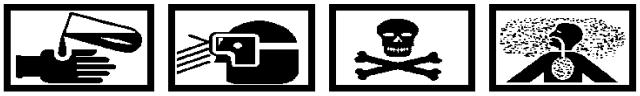

Molybdenum Disulfide Lubricant SAE–AMS–M–7866 19

g. Apply a mixture of SAE–AMS–M–7866 and MIL–PRF–23699 to threads and install two short bolts (60) through bearing cage (55) to oil seal (46) in slot positions of rear bearing retainer (63) when installed. Snug bolts to hold parts in place.

h. Install metal O–ring gasket (44) in recess of rear bearing oil tube (42). (QA)

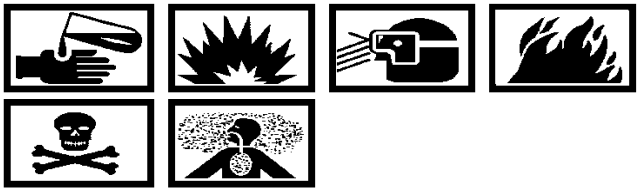

Sealing Compound Permatex No. 1372 or Loctite 30558 34

i. Apply Permatex 1372 or Loctite 30588 sealant to oil tube threads.

j. Install rear turbine bearing oil tube (42) through rear turbine bearing support into oil seal (46).

CAUTION

Tube must thread freely into seal to prevent thread damage in the following step.

k. Torque rear turbine bearing oil tube (42) to 120–140 lb in. (QA)

NOTE

Rear turbine bearing oil tube (42), part number 23032654 can be removed or installed in rear turbine bearing support (51) without removal of the turbine unit assembly.

l. Turn rear turbine bearing support in stand with aft end up.

WARNING

Super–chilled (frozen parts) will cause freezer burn. Use clean insulated gloves to handle dry ice and frozen parts.

CAUTION

Install the turbine bearing so the key slot in the outer ring is toward the rear of the engine. Be sure that the S/N on all three bearing components are identical and that all are facing in the same direction.

m. Chill rear turbine bearing outer ring (57) to 0° F (–18° C) using dry ice, if necessary, and install in bearing cage (55) with key slot aligned with slot in cage at 10 o'clock location. (QA)

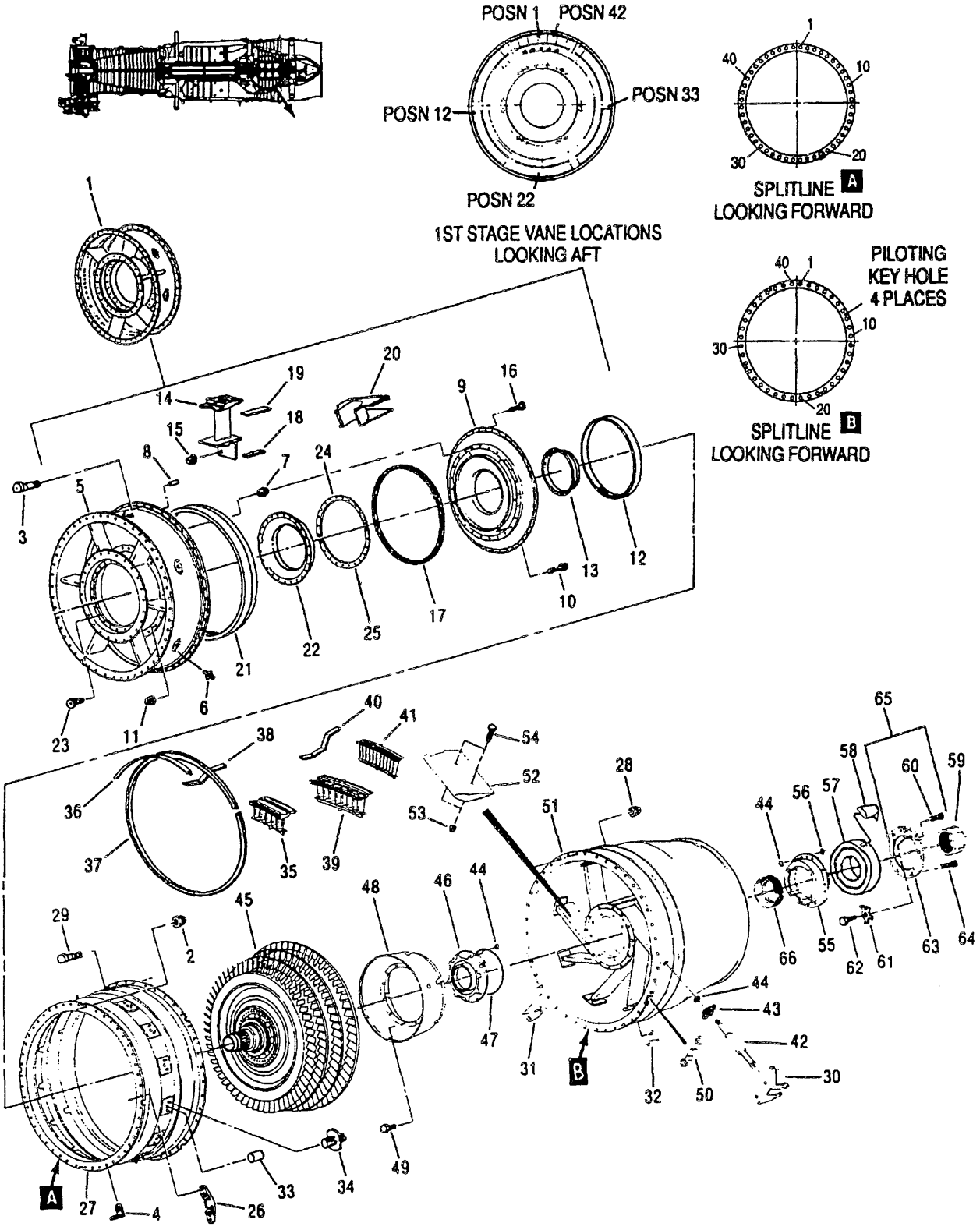

Figure 1. Turbine Unit Details (Sheet 1 of 2)

1. Turbine Inlet Case Assembly
2. Nut
3. Bolt
4. Bracket
5. Turbine Inlet Case
6. Nut
7. Pin
8. Pin
9. Guide Vane and Seal Support
10. Bolt
11. Nut
12. Insert, Turbine Front Outer Honeycomb Seal
13. Insert, Turbine Front Piston Ring Seal
14. First Stage Vane Assembly
15. Self–Locking Nut
16. Bolt
17. First Stage Turbine Vane Inner Seal
18. First Stage Turbine Vane Inner Strip Seal
19. First Stage Turbine Vane Outer Band Strip Seal
20. First Stage Vane Saddle
21. First Stage Vane Air Seal Ring
22. Front Bearing Support Thermal Insulation Blanket
23. Screw (flathead)
24. Gang Channel Nut
25. Gang Channel Nut
26. Turbine Case Piloting Key
27. Turbine Vane Case
28. Nut
29. Bolt
30. External Oil Tube Bracket
31. Bracket
32. Bracket
33. Pin
34. Stud
35. Second Stage Vane Assembly
36. Second Stage Vane Retainer
37. Split–Metal O–Ring
38. Second Stage Turbine Vane Strip Seal
39. Third Stage Vane Assembly
40. Third Stage Turbine Vane Strip Seal
41. Fourth Stage Vane Assembly
42. Rear Bearing Oil Tube
43. Rear Bearing Oil Tube Flange
44. Metal O–Ring Gasket
45. Turbine Rotor Assembly
46. Rear Bearing Oil Seal Assembly
47. Metal O–Ring Gasket
48. Inner Forward Flow Path Shroud
49. Bolt
50. Turbine Casing Piloting Key
51. Rear Turbine Bearing Support
52. Inner Fairing
53. Nut
54. Bolt
55. Rear Bearing Cage
56. Metal O–Ring Gasket
57. Roller Bearing
58. Locking Key
59. Rear Bearing Clamp Nut
60. Bolt
61. Tab Locking Washer Key
62. Oil Nozzle
63. Rear Bearing Retainer
64. Bolt
65. Rear Bearing Retainer Assembly
66. Rear Turbine Labyrinth Seal

Figure 1. Turbine Unit Details (Sheet 2)

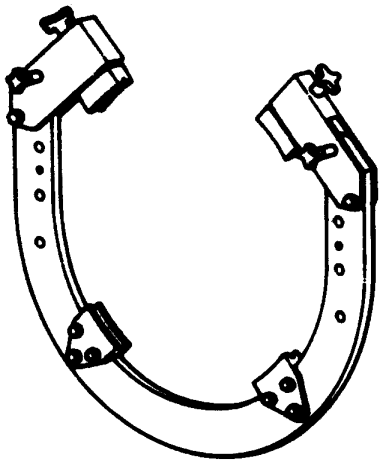

Figure 2. 23033000 Turbine Unit–to–6799764 Adapter Attaching Adapter

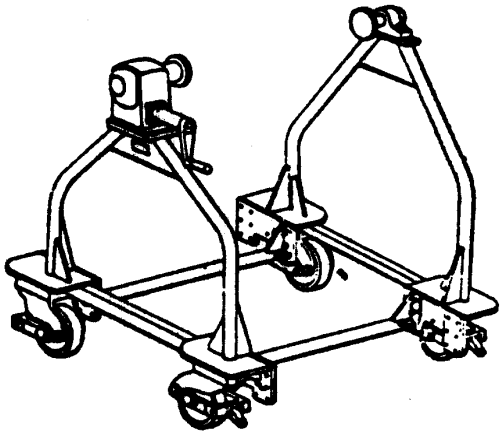

Figure 3. 6795905 Engine Component Turnover Stand

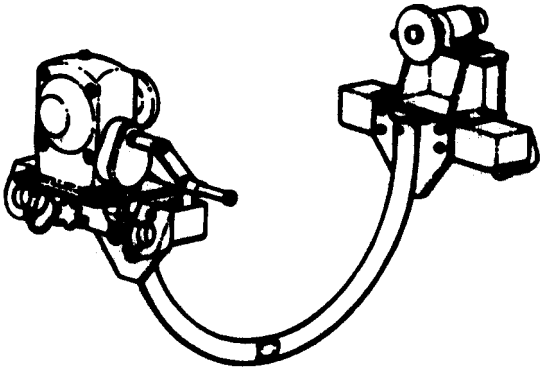

Figure 4. 6796980 Engine Component to Parallel Rail Stand Rotating Adapter

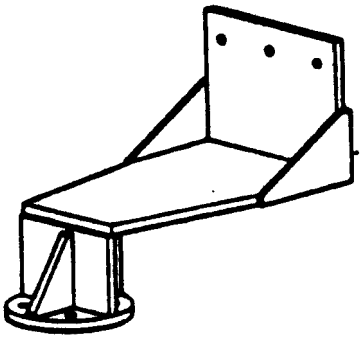

Figure 5. 6799764 Engine Component to Parallel Rail Stand Adapter Attaching Adapter

CAUTION

Ensure the rear turbine bearing outer ring is installed with the key slot toward the rear of the engine. Install the locking key from the rear so that the lock aligns with the slot on the bearing outer ring.

n. Install locking key (58) in slot to locate bearing outer ring in cage (55). Bearing–to–cage fit shall be 0.0001T–0.0014L. Locking key–to–rear bearing outer ring slot fit shall be 0.006L–0.015L. (QA)

o. Install rollers and retainer in outer ring (57).

p. Install 6798242 turbine rear bearing rollers retainer in bearing from rear of bearing support.

Lubricating Oil, MIL–PRF–23699 2

Dry Film Lubricant DOD–L–25681 30

q. Apply MIL–PRF–23699 engine oil and install metal O–ring gasket (56) on rear face of bearing cage (55). Install rear bearing retainer (63). Apply DOD–L–25681 lubricant to bolt threads.

r. Install bolts (64) into rear bearing retainer (63). Torque bolts in sequence as shown in figure 6 to 40 lb in., then to 70 lb in. and finally to 90–100 lb in. Recheck all bolts to 90–100 lb in. and lockwire. (QA)

s. Turn rear turbine bearing support front end up.

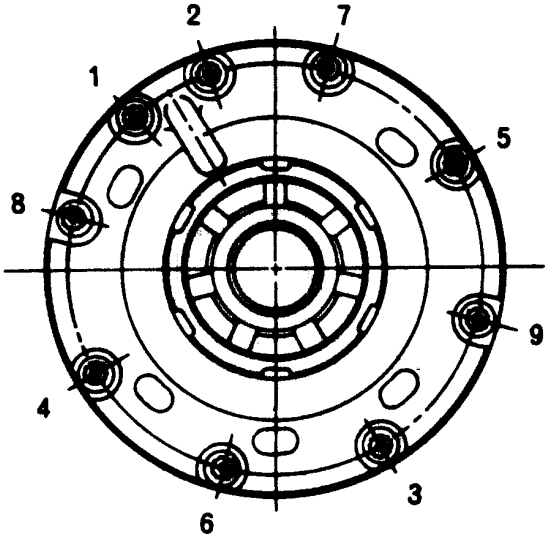

Figure 6. Rear Bearing Retainer Bolt Tightening Sequence

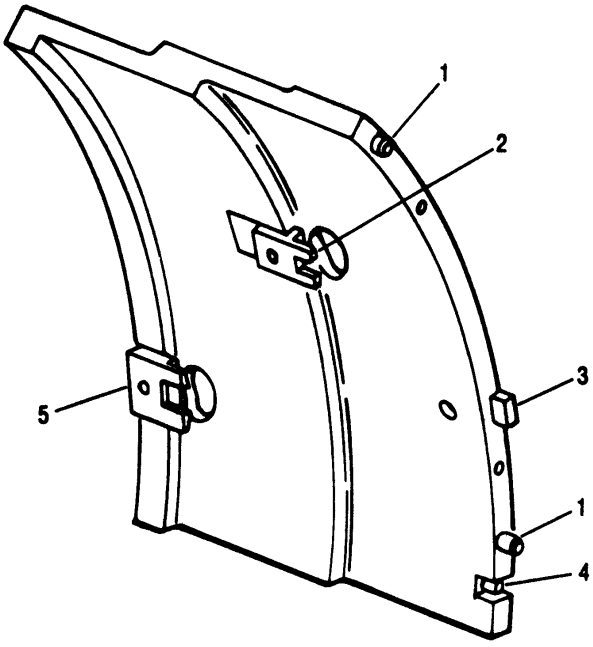

1. Fixture Pins
2. 3rd Stage Locator
3. Fixture Locator
4. 4th Stage Slot
5. 2nd Stage Locator

Figure 7. 23033004 Turbine Vane Alignment Fixture

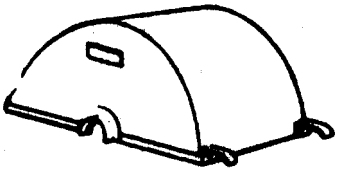

Figure 8. 6796546 Turbine Rotor Cover

3. TURBINE ROTOR AND VANE ASSEMBLY.

Support Equipment Required

Part No./Type Designation	Nomenclature
23033004	Fixture, alignment, turbine vane
6796546	Cover, turbine rotor
6797484	Jack, adjusting, turbine rotor clearance
6798242	Retainer, turbine rear bearing rollers
6799619	Adapter, lifting, turbine rotor
6799803	Guide, turbine rear bearing
––	Gage, feeler
––	Wrench, torque (0–100 lb in.)

Materials Required

Specification No./Part No.	Nomenclature
NS165	Compound, Anti–seize
MIL–A–907	Compound, Anti–seize

a. Remove 6796546 turbine rotor cover (See figure 8.)

CAUTION

Turbine Rotor Stand 4th Stage Wheel Adapter P/N 6796836–202 shall not be used for lifting.

b. Install hoist to 6799619 turbine rotor lifting adapter and lift turbine rotor (45, figure 1) from stand.

c. Remove stand adapter from aft end of turbine rotor.

NOTE

Turbine rotor assembly serial number, etched on the end of the 4th stage wheel shaft, should be verified with Assembly Service record prior to assembly.

d. Verify turbine rotor assembly serial number, etched on the end of the turbine 4th stage wheel shaft, with the Assembly Service record (figure 19). Etch serial number (identical to serial number from 4th stage wheel radius, example AXXXX) on end of turbine 4th stage wheel shaft if not already there.

e. Install the bearing inner ring and rear turbine labyrinth seal (66) onto the turbine rotor rear bearing journal.

f. Install 6799803 turbine rear bearing guide on turbine rotor rear shaft. (See figure 9.)

g. Install 6798242 turbine rear bearing roller retainer onto rear bearing inner ring.

h. Slowly lower and rotate turbine rotor (45, figure 1) into rear turbine bearing support (51). (See figure 9.)

i. Turbine rotor will push 6798242 bearing rollers retainer out.

j. Remove 6799803 turbine rear bearing guide from turbine rotor shaft.

k. Install 6797484 adjusting jack, from underneath, on inner rear flange of the rear turbine bearing support and adjust jack until it supports the turbine rotor. (See figure 10.)

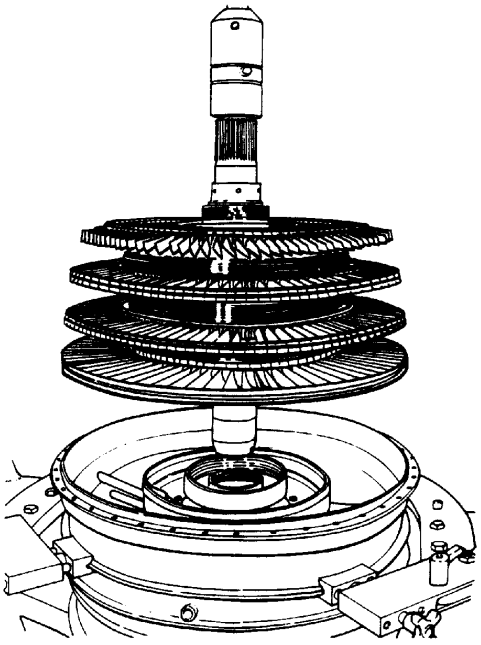

Figure 9. Installing Turbine Rotor into Bearing Support

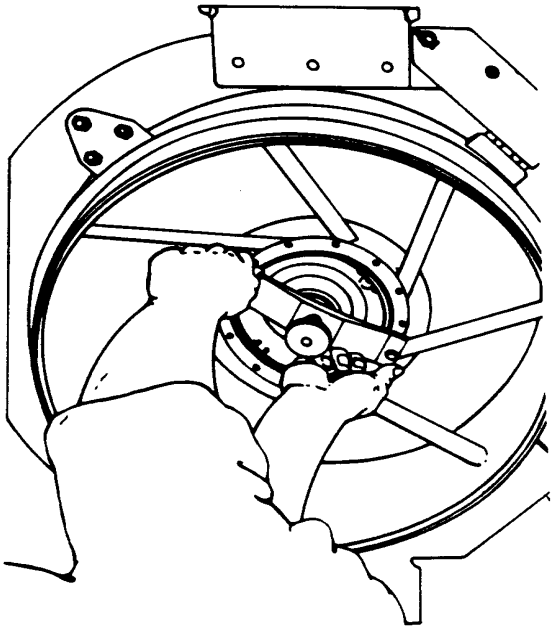

Figure 10. Installing 6797484 Turbine Rotor Adjusting Jack (Bottom View)

l. Remove 6799619 rotor lifting adapter.

NOTE

When installing vane assemblies in each vane stage, first install two vane segments 180 degrees apart to position the applicable interstage seal.

If previously marked, install vane assemblies in same position as disassembled.

m. Install fourth stage vane assemblies (41, figure 1) between third and fourth stage turbine wheels and engage them into the interstage seal.

n. Install third stage vane assemblies (39) between second and third stage turbine wheels and engage them into the interstage seal. Install seal strips (40) between the vanes as they are assembled.

o. Install the second stage vane assemblies (35) between second and first stage turbine wheels and engage them into the interstage seal. Install the seal strips (38) between the vanes as they are assembled.

p. Align fourth, third, and second stage vanes to rear bearing support as follows:

(1) Position alignment fixture 23033004 (See figure 7) relative to rear bearing support bolt hole positions 2 and 7. (See figure 1, splitline B).

(2) Align fourth stage turbine vane tang with fourth stage slot (4, figure 7) in base of fixture. Tap with a nonmetallic hammer if necessary.

(3) Align third stage turbine vane tang with third stage locator (2) of alignment fixture. Tap with a nonmetallic hammer if necessary.

(4) Align second stage turbine vane tang with second stage locator (5) of alignment fixture. Tap with a nonmetallic hammer if necessary.

(5) Check alignment of vane tangs with fixture and ensure that the fixture locator (3) fits in key hole slot at 12:00 position of rear bearing support and that fixture pins (1) fall into bolt holes at positions 2 and 7 on rear bearing support. (See figure 1, splitline B.)

(6) Carefully remove fixture being careful not to displace any vane segments.

q. Install turbine vane casing (27, figure 1) over turbine rotor and vane assemblies with slots in alignment with mating vane segment tangs. (The casing flange shall be in contact with rear turbine bearing support flange before bolts are installed.)

CAUTION

Do not pull parts together with flange bolts. Casing will easily go into place if all parts are properly positioned.

Antiseize Thread Compound MIL–A–907 35

r. Install external oil tube bracket (30) spanning positions 28, 29 and 30, the turbine accelerometer harness and aft PS7 tube assembly bracket (31) in position 23 and the rear turbine bearing pressure oil tube assembly bracket (32) in position 14 on the rear turbine bearing support forward flange (51). (See figure 1, splitline B) Apply MIL–A–907 Never Seez compound to bolts (29) and install. (Do not tighten bolts and nuts).

s. Install turbine case piloting keys (50) spanning positions 5 and 6, 15 and 16, 25 and 26, and 35 and 36. Apply MIL–A–907 Never Seez compound to bolts (29) and install. (Do not tighten bolts and nuts.) (See figure 1, splitline B.)

Anti–seize Compound (Never Seez) NS165 32

t. Apply NS165 Never Seez to bolts (29). Install flange bolts (29) and nuts (28). Torque nuts to 70–90 lb in. (QA)

u. Raise turbine rotor jack.

v. Install large split–metal O–Ring (37) in groove formed by the outer band of the second stage vane assemblies (35) and the turbine vane case (27).

w. Install the four second stage vane retainers (36) in openings of the second stage vane assemblies.

x. Lower turbine rotor until it rest against vane assemblies.

4. TURBINE INLET CASING ASSEMBLY.

Support Equipment Required

Part No./Type Designation	Nomenclature
23051225	Fixture, Assembly, First Stage Vanes
6799717	Cover, turbine inlet casing
––	Wrench, Torque (0–100 lb in.)

Materials Required

Specification No./Part No.	Nomenclature
NS165	Compound, Anti–seize
MS20995C32	Lockwire
VV–P–236	Petrolatum, 0.032 inch

a. Install turbine front bearing support thermal insulation blanket (22, figure 1) over rear inner flange portion of turbine inlet casing (5). Secure with four screws (23) and gang channel nuts (24 and 25). Torque screws to 37–42 lb in. (QA)

b. Place 23051225 first stage turbine vane fixture assembly on a bench and lay the first stage vane air seal ring (21) in the groove of the fixture with the forward edge (lip) up.

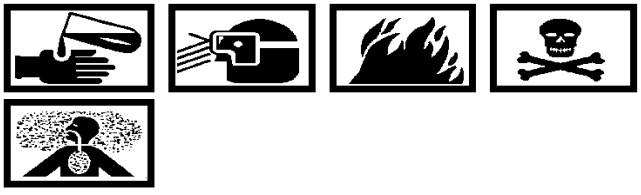

Petrolatum Lubricant VV–P–236 33

c. Place the first stage turbine vane inner strip seals (18) and the first stage turbine vane outer band strip seals (19) in the applicable slots in each first stage vane assembly (14). A small amount of VV–P–236 Petrolatum may be used to hold the strip seals in place during assembly.

NOTE

If the first stage turbine vanes have been previously marked at disassembly, install the vanes in the same position as disassembled.

d. Install first stage vane assemblies (14) one at a time on the 23051225 first stage vane assembly fixture. Place each vane assembly with the blade track down and inside the ring. (Use the sequence shown in figure 11.)

e. Push each vane assembly (14) to engage the forward edge (lip) of the vane air seal ring (21) with the slot of the vane. Be sure each inner and outer band strip seal (18 and 19) are seated in the slots of each vane by pushing the vane assemblies (14) together.

CAUTION

Do not intermix saddle vane part numbers.

f. Install the first stage vane saddles (20) where required. (See figure 11.)

g. Insert the last vane by pushing all of the previously instaled vanes together in a circumferential pattern. Position all vanes as required to equally space the vane and saddle assemblies after all parts are installed.

h. Place the turbine inlet casing (5) over the first stage turbine vane (14) and saddle assemblies (20). Align the dowel pin on the inlet case with the number one vane, while aligning the inlet case struts with the saddles (20).

CAUTION

Care must to taken to prevent vane assemblies from moving during rotation.

i. Carefully rotate the turbine inlet case and vane assemblies and the turbine vane fixture assembly over and place the inlet case assembly (1) on the bench with the vanes up.

j. Remove 23051225 first stage turbine vane fixture assembly.

k. Gently move the individual vane assemblies (14) until all vanes have engaged the pins in the turbine inlet case (5).

l. Place the first stage turbine vane inner seal (17) on the tangs of the first stage turbine vane assemblies (14).

WARNING

Super–chilled (frozen parts) will cause freezer burn. Use clean insulated gloves to handle dry ice and frozen parts.

m. Assemble the guide vane and seal support (9) into the aft side of the turbine inlet casing (5). Allow the support to rest on the first stage turbine vane assemblies (14). Be sure the dowel pins and pilot holes are aligned. If necessary, chill the guide vane and seal support (9) with dry ice.

Anti–seize Compound (Never Seez) NS165 32

n. Apply NS165 Never Seez to bolts (10). Secure the guide vane and seal support (9) to the turbine inlet case (5) with bolts (10) and nuts (11).

o. Torque to 74–89 lb in. (QA)

p. Apply NS165 Never Seez to bolts (16). Secure the guide vane and seal support (9) to the first stage turbine vane assembly (14) with bolts (16) and nuts (15).

q. Torque to 74–89 lb in. (QA)

r. Install the turbine inlet case assembly (1) on the turbine vane case (27) as follows:

(1) Align the “O” marks on the inlet case lower flange and the vane case upper flange.

(2) Align the piloting key slots along the splitlines .

(3) Slowly lower the turbine inlet case assembly (1) over the turbine rotor assembly front shaft (45).

(4) Gently tap the second stage vane assembly (35) inward as needed to help the turbine inlet case assembly fit into place.

CAUTION

Do not pull parts together with flange bolts. Casing will easily go into place if parts are not deformed and are properly positioned.

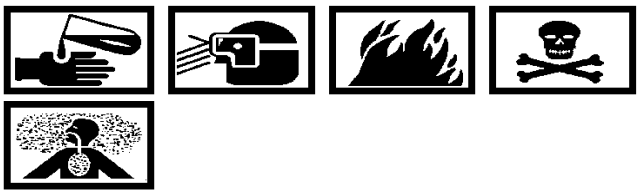

Anti–seize Compound (Never Seez) NS165 32

s. Apply NS165 Never Seez to bolts (3). Install turbine vane case piloting keys (26) spanning positions 1 and 48, 12 and 13, 24 and 25, and 36 and 37 at the vane casing splitline with bolts (3) and nuts (2). Snug but do not torque at this time. (See figure 1, splitline A.)

t. Apply NS165 Never Seez to one bolt (3). Install bracket (4) in position 21 on the turbine vane casing splitline with bolt (3) and nut (2). Snug but do not torque at this time. (See figure 1, splitline A.)

u. Apply NS165 Never Seez to remaining bolts (3). Install remaining splitline bolts (3) and nuts (2).

v. Torque to 74–89 lb in. (QA)

w. Install 6799717 turbine inlet case cover. (See figure 13.)

5. TURBINE FRONT BEARING SUPPORT AND CAGE ASSEMBLY.

Support Equipment Required

Part No./Type Designation	Nomenclature
––	Gage, feeler

Materials Required

Specification No./Part No.	Nomenclature
MIL–PRF–23699	Oil, lubricating

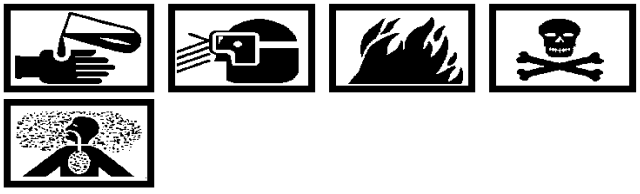

Lubricating Oil, MIL–PRF–23699 2

a. Install split seal rings (1 and 2, figure 12) on front bearing cage (3). Apply MIL–PRF–23699 engine oil to mating surfaces of cage and rings. (QA)

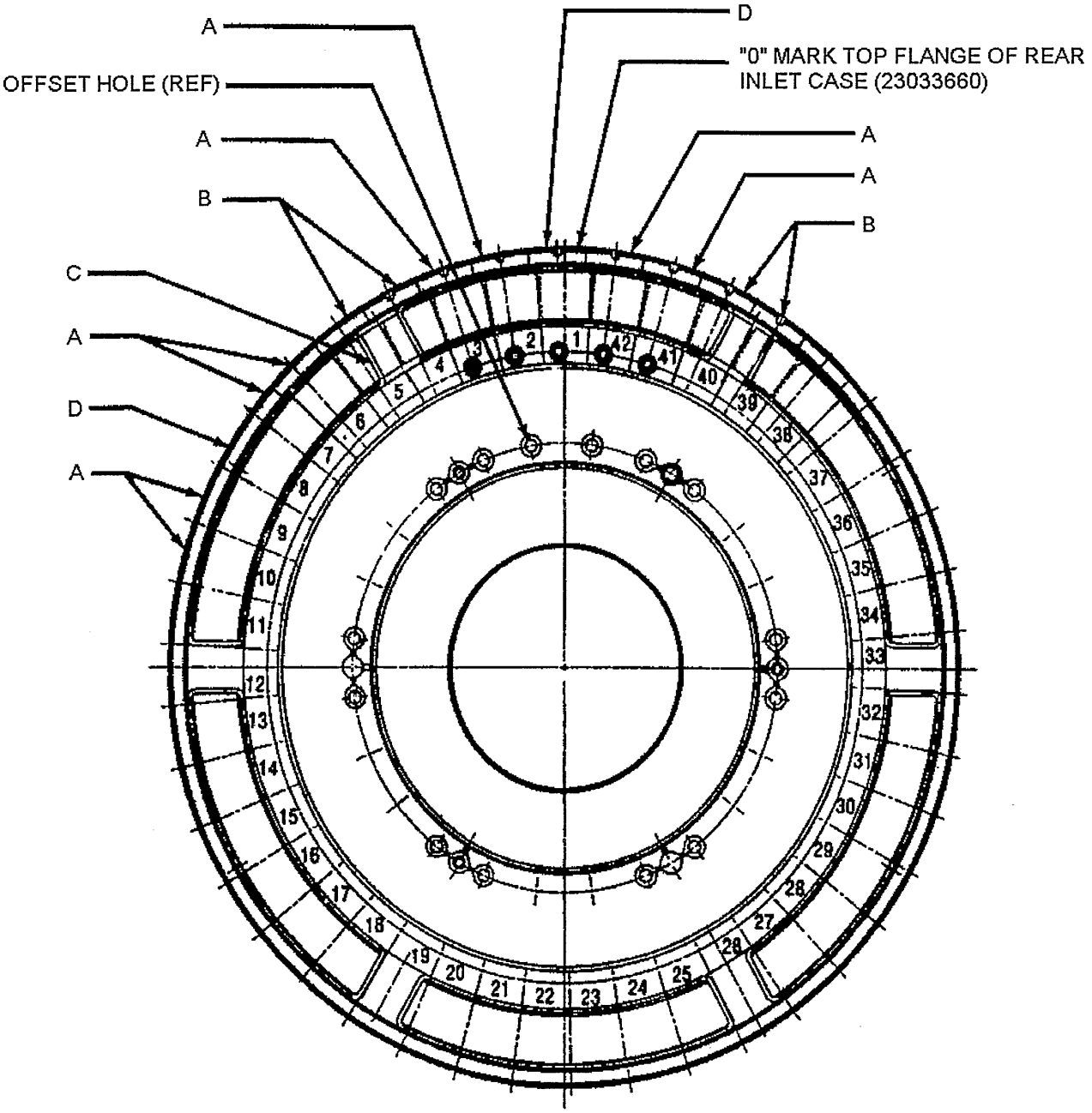

A QTY 24, P/N 23078438, 23076255, 23073823, 23032721, STANDARD VANE, POSITIONS 2, 3, 6, 7, 9, 10, 13, 14, 16, 17, 20, 21, 23, 24, 27, 28, 30, 31, 34, 35, 37, 38, 41, 42

B QTY 12, P/N 23078439, 23076256, 23073824, 23032731, SADDLE VANE, POSITIONS 4, 5, 11, 12, 18, 19, 25, 26, 32, 33, 39, 40

C QTY 6, P/N 23009235, 23083416, SADDLE, POSITIONS BETWEEN 4 & 5, 11 & 12, 18 & 19, 25 & 26, 32 & 33, 39 & 40. (PART NUMBERS ARE NOT TO BE INTERMIXED BUT REPLACED AS COMPLETE SET ONLY)

D QTY 6, P/N 23078440, 23076257, 23073825, 23032741, BORESCOPE VANE, POSITIONS 1, 8, 15, 22, 29, 36

Figure 11. Turbine First Stage Vane Assembly Positions and Marking (Front View)

b. Install front bearing vibration damper (4) on front bearing cage (3) and install front bearing cage in turbine front bearing support (5) aligning locating key and slot. (QA)

c. Check damper ring with the mating front bearing support and bearing cage for 0.003 in. maximum clearance. (reference WP 054 00)

d. Secure bearing cage to bearing support with external retaining ring (6). (QA)

WARNING

Super–chilled (frozen parts) will cause freezer burn. Use clean insulated gloves to handle dry ice and frozen parts.

e. Install turbine front bearing outer ring in bearing cage and secure with internal retaining ring (8). Chill turbine front bearing outer ring if necessary to 0° F (–18°C) Bearing outer ring–to–bearing cage fit shall be 0.0010T–0.0014L. (QA)

CAUTION

Be sure notches in retaining ring are engaged with pins in front bearing support. When properly engaged, retaining ring gap will be positioned at oil nozzle.

f. Install bearing support and cage in turbine inlet casing. (Be sure support is seated and install two bolts in place temporarily.) Bearing support–to–inlet casing fit shall be 0.0005L–0.0050L. (QA)

6. TURBINE FRONT LABYRINTH SEALS, BEARING, AND COUPLING SHAFT ASSEMBLY.

Support Equipment Required

Part No./Type Designation	Nomenclature
6799621	Wrench, turbine coupling clamp nut
6799634	Guide, turbine front bearing inner ring and rollers
6799641	Pusher, turbine front bearing inner ring
––	Gage, feeler
––	Wrench, torque (0–100 lb ft.)
––	Gloves, insulated

Materials Required

Specification No./Part No.	Nomenclature
MIL–PRF–23699	Oil, lubricating
SAE–AMS–M–7866	Molybdenum Disulfide

WARNING

Heated Parts will cause skin damage (burns). Use clean insulated gloves to handle parts.

a. Heat turbine front bearing front labyrinth seal (9, figure 12) to 250° F to 300° F (121° C to 149° C) and place on rotor shaft. Small ID goes to front of turbine unit. Seal–to–shaft fit shall be 0.0015T–0.0010L. (QA)

b. Install 6799634 turbine front bearing inner ring and roller guide on bearing support. (See figure 13.)

NOTE

Be sure puller lip on the inner ring is to front of turbine.

c. Heat bearing inner ring and rollers (7, figure 12) to 250° F to 300° F (121° C to 149° C) and install on rotor shaft. Front bearing inner ring–to–shaft fit shall be 0.0050T–0.0010L. (QA)

d. Install 6799641 front bearing inner ring pusher and front bearing front labyrinth seal (9) and 6799634 inner ring guide. (See figure 13.)

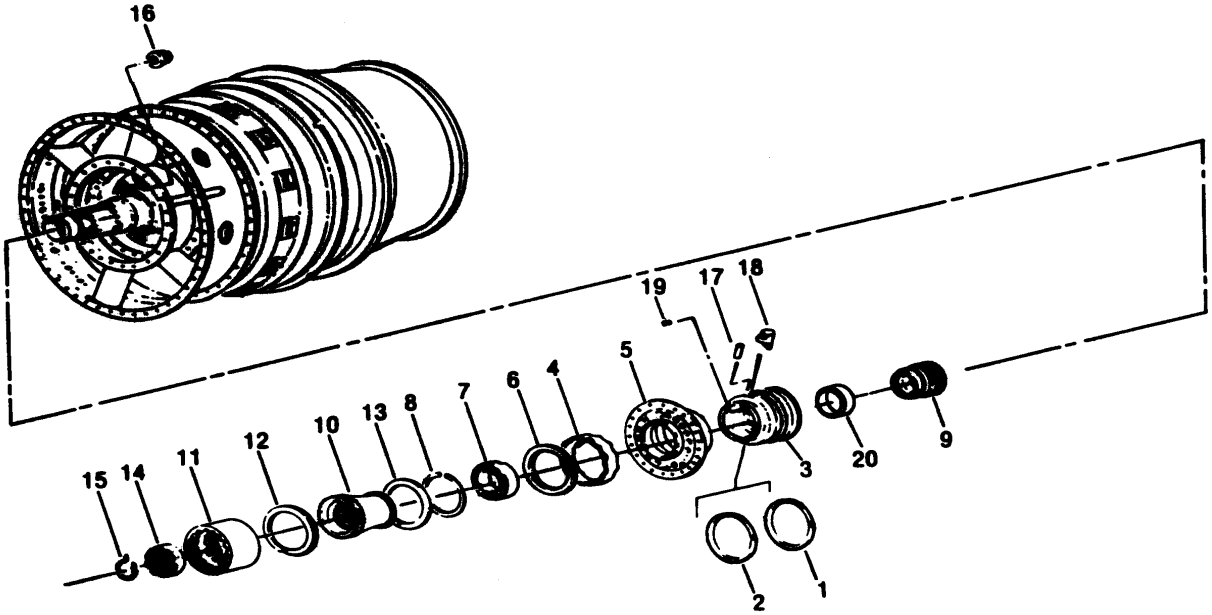

1. Split Seal Ring
2. Split Seal Ring
3. Front Bearing Cage
4. Front Bearing Vibration Damper
5. Front Bearing Support
6. External Retaining Ring
7. Roller Bearing
8. Internal Retaining Ring
9. Front Bearing Front Labyrinth Seal
10. Shaft Coupling
11. Coupling Adapter
12. Internal Retaining Ring
13. Internal Retaining Ring
14. Coupling Clamp Nut
15. Lockring
16. Nut
17. Pin
18. Anti–rotation Pin
19. Pin
20. Front Inner Honeycomb Seal Insert

Figure 12. Turbine Front Bearing and Seal Details

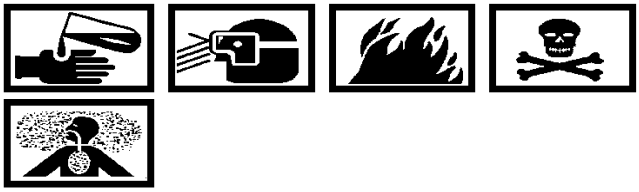

Lubricating Oil, MIL–PRF–23699 2

e. Apply MIL–PRF–23699 engine oil to splines and install turbine shaft coupling (10, figure 12) on turbine coupling adapter (11) and secure with two internal retaining rings (12 and 13). (QA)

f. Apply MIL–PRF–23699 engine oil to splines and install turbine shaft coupling assembly.

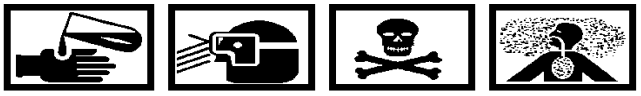

Molybdenum Disulfide Lubricant SAE–AMS–M–7866 19

Lubricating Oil, MIL–PRF–23699 2

g. Apply a mixture of SAE–AMS–M–7866 and MIL–PRF–23699 to threads and install turbine coupling clamp nut (14).

h. Tighten nut 70–90 lb ft. with 6799621 turbine coupling clamp nut wrench. (See figure 14.) (QA)

i. Install lockring (15, figure 12) inside turbine rotor shaft to secure coupling clamp nut. (QA)

7. TURBINE REAR BEARING CLAMP NUT INSTALLATION.

Support Equipment Required

Part No./Type Designation	Nomenclature
6799621	Holder, turbine rotor
6796382	Wrench, support, turbine
6796529	Wrench, spanner, turbine rear bearing clamp nut
---	Wrench, torque (0-150 lb ft.)

Materials Required

Specification No./Part No.	Nomenclature
MIL-PRF-23699	Oil, Lubricating
SAE-AMS-M-7866	Molybdenum Dislufide

a. Remove rotor positioning jack and turbine rear bearing guide from rear of turbine rotor.

b. Slowly turn unit to horizontal position in stand.

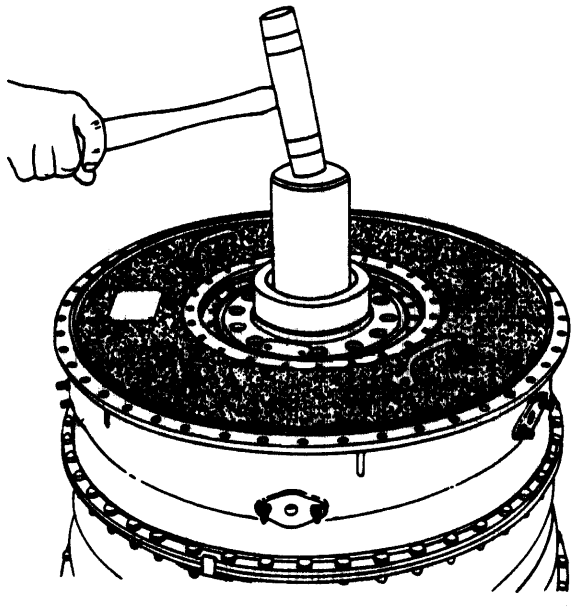

Figure 13. Seating Turbine Front Bearing Inner Ring with 6799634 Ring Guide and 6799641 Front Bearing Inner Ring Pusher and Labyrinth Seal

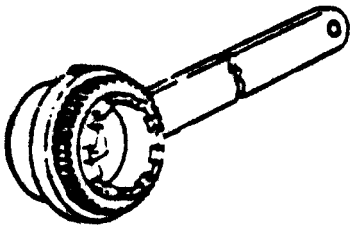

Figure 14. 6799621 Turbine Coupling Clamp Nut Wrench

Molybdenum Disulfide Lubricant SAE-AMS-M-7866 **19**

Lubricating Oil, MIL-PRF-23699 **2**

c. Apply a mixture of SAE-AMS-M-7866 and MIL-PRF-23699 to threads and install rear bearing clamp nut (59, figure 1). (Make sure a hole in clamp nut aligns with a lockpin slot in turbine rotor shaft. (QA)

NOTE

Tightening of turbine rotor rear bearing clamp nut may be accomplished in final assembly after turbine unit has been installed on compressor unit. When nut is not tightened at this location, attach a warning tag to unit indicating it has not been tightened. Tag shall remain attached until proper torque is accomplished.

d. Hold rotor using 6799621 turbine coupling clamp nut wrench installed in front end of turbine coupling adapter (See figure 14). Use 6796529 spanner wrench and 6796382 wrench support (See figure 15) to tighten the rear bearing clamp nut (59, figure 1) to 100-110 lb. ft; loosen and retighten to 75-90 lb. ft. to ensure seating of parts and stress-free assembly. Make sure a hole in the clamp nut aligns with one of the lockpin slots in the turbine rotor shaft.

8. TURBINE ROTOR AXIAL CLEARANCE CHECK.

Support Equipment Required

Part No./Type Designation	Nomenclature
3856	Gage, axial clearance, turbine rotor to vane assembly
6796535	Adapter, gage, turbine rotor to vane assembly axial clearance
6796569	Wrench, positioning, turbine rotor axial movement
---	Gage, depth

CAUTION

Use care in the following operation. Rotor must turn without any friction when assembly is complete. If rotor seizes, do not force rotation.

a. Use 6796569 positioning wrench, to pull rotor to maximum rearward position as determined by a firm contact with stator vanes. (See figure 16). (QA)

b. Install 3856 axial clearance gage and 6796535 gage adapter (See figure 17). (QA)

c. Position dial indicator so that a reading of approximately 0.400 in. travel can be read. “Zero” the indicator. (See figure 17.) (QA)

d. Move rotor to maximum forward position, with turbine rotor axial movement positioning wrench. (QA)

e. Record this measurement for final assembly use. The rotor axial total travel must not be less than 0.230 in. minimum. (QA)

f. If total travel is less than required amount, recheck assembly for misaligned or warped vane assemblies. (QA)

g. If a warped vane is suspected, disassemble turbine unit and make the following inspection:

(1) Place all vane assemblies in position in front vane casing and turbine inlet casing and secure all vane assemblies in place. (QA)

(2) Determine if the inner rims of vane stages are in same plane by means of a straight edge and depth gage. (QA)

9. COMBUSTION CHAMBER INNER CASING, INNER CASING LINER, AND OIL TUBES INSTALLATION.

Support Equipment Required

Part No./Type Designation	Nomenclature
---	Wrench, torque (0-100 lb in.)

Materials Required

Specification No./Part No.	Nomenclature
MIL-PRF-23699	Oil, lubricating
NS165	Compound, Anti-seize
MS20995C32	Lockwire, 0.032 inch
MS9205-138	Gasket, metal O-ring
6784930-56	Seal, metal O-ring
6784930-83	Seal, metal O-ring

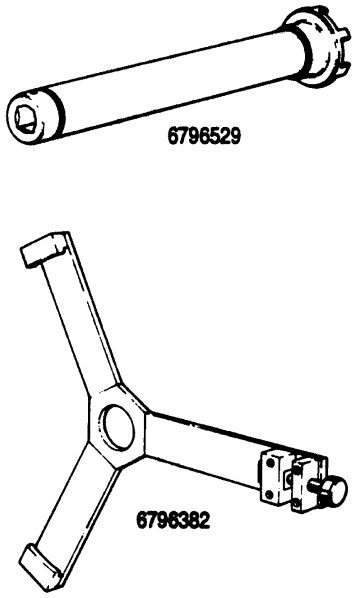

Figure 15. 6796529 Turbine Rear Bearing Clamp Nut Spanner Wrench and 6796382 Wrench Support

CAUTION

Do not allow rotor to drop during changing of positions.

a. Slowly turn turbine unit to a vertical position in stand, front end up.

Lubricating Oil, MIL-PRF-23699 2

b. Install performed packing (14, figure 18) on the front end of the pressure oil tube (1) and install on turbine front bearing support. Apply MIL-PRF-23699 engine oil to bolt threads (10) and install. Torque bolts to 70-85 lb in. and lockwire. (QA)

c. Install two performed packings (14, figure 18) on the front end of the scavenge oil tube (2) and install on turbine front bearing support. Apply MIL-PRF-23699 engine oil to bolt threads (12) and install. Torque bolts to 70-85 lb. in. and lockwire. (QA)

NOTE

Before installation, the two metal O-ring seals on the combustion chamber inner casing liner should be thoroughly clean of all grit particles and any other form of solid particle contaminants to ensure a proper seal and reduce the possibility of leakage.

d. Install metallic o-ring seals (3 and 4) on the front and rear flanges of the combustion chamber inner casing liner assembly (5).

NOTE

Metal gaskets may be held in place with petrolatum. Use minimum amount of petrolatum necessary to hold gasket in place.

e. Remove the temporary bolts from bearing support and install combustion chamber inner casing liner over scavenge oil and pressure oil tubes.

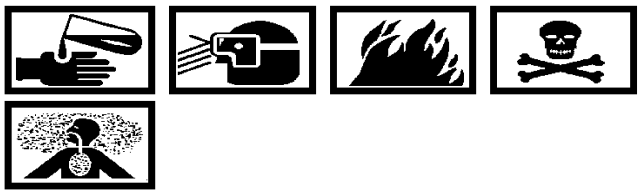

Anti-seize Compound (Never Seez) NS165 32

f. Apply NS165 to bolt threads (11) and install as follows:

NOTE

The correct bolt tightening sequence is dependent on the type of metallic seal being used in the assembly. Failure to follow the correct tightening sequence may result in oil leakage.

(1) If assembly is installed with metallic o-ring seals, bolts shall be tightened in a circumferential direction as follows (QA):

(a) Torque bolts to 45 lb. in., then to 65 lb. in. and finally to 70-85 lb. in. Wait fifteen minutes for component to set.

(b) Recheck bolts in a circumferential direction with torque wrench set at 85 lb. in.

(c) After completing the retorque, if any movement of bolts was felt, repeat torque and wait another fifteen minutes. Continue this process until no bolt movement can be felt during torquing.

(d) Lockwire to secure bolts in sets of three.

(2) If assembly is installed with metallic c-ring seals or the omega metallic ring seals, torque bolts as follows (QA):

(a) Tighten the bolts 180° apart to 45 lb. in. then to 65 lb. in.

(b) Rotate 90° around bolt circle and tighten bolts 180° apart to 45 lb. in. then to 65 lb. in.

(c) Repeat criss-cross torque procedure until all bolts are torqued to 45 lb. in. then to 65 lb. in.

(d) Repeat criss-cross torque procedure until specified torque of 70-86 lb. in. is met.

(e) Lockwire to secure bolts in set of three.

g. Install seal ring expanders in grooves at front end of combustion chamber inner casing (7). Position split seal rings over expanders and lock using the 6.250 in. OD split seal compressor P/N 6797940.

h. (Alternate) Install split seal piston rings in grooves at front end of combustion chamber inner casing (7). Check seal rings for freedom of movement after installation.

i. Install metallic gasket (6) to rear flange of combustion chamber inner casing (7).

j. Install combustion chamber inner casing (7) over combustion chamber inner casing liner (5).

k. Secure to turbine inlet casing with the gang channel nuts (16, figure 12) and bolts (13, figure 18).

Anti-seize Compound (Never Seez) NS165 32

l. Apply NS165 to bolt threads (13) and install as follows:

NOTE

The correct bolt tightening sequence is dependent on the type of metallic seal being used in the assembly. Failure to follow the correct tightening sequence may result in oil leakage.

(1) If assembly is installed with metallic o-ring seals, bolts shall be tightened in a circumferential direction as follows (QA):

(a) Torque bolts to 45 lb. in., then to 65 lb. in. and finally to 70-85 lb. in. Wait fifteen minutes for component to set.

(b) Recheck bolts in a circumferential direction with torque wrench set at 85 lb. in.

(c) After completing the retorque, if any movement of bolts was felt, repeat torque and wait another fifteen minutes. Continue this process until no bolt movement can be felt during torquing.

(d) Lockwire to secure bolts in sets of three.

(2) If assembly is installed with metallic c-ring seals or the omega metallic ring seals, torque bolts as follows (QA):

(a) Tighten the bolts 180° apart to 45 lb. in. then to 65 lb. in.

(b) Rotate 90° around bolt circle and tighten bolts 180° apart to 45 lb. in. then to 65 lb. in.

(c) Repeat criss-cross torque procedure until all bolts are torqued to 45 lb. in. then to 65 lb. in.

(d) Repeat criss-cross torque procedure until specified torque of 70-85 lb. in. is met.

(e) Lockwire to secure bolts in sets of three.

Anti-seize Compound (Never Seez) NS165 32

m. Apply NS165 to threads and install bolts (8) at front to secure inner casing liner to inner casing. Tighten bolts as follows (QA):

(1) If assembly is installed with metallic o-ring seals, bolts shall be tightened in a circumferential direction as follows (QA):

(a) Torque bolts to 45 lb. in., then to 65 lb. in. and finally to 70-85 lb. in. Wait fifteen minutes for component to set.

(b) Recheck bolts in a circumferential direction with torque wrench set at 85 lb. in.

(c) After completing the retorque, if any movement of bolts was felt, repeat torque and wait another fifteen minutes. Continue this process until no bolt movement can be felt during torquing.

(d) Lockwire to secure bolts in sets of three.

(2) If assembly is installed with metallic c-ring seals or the omega metallic ring seals, torque bolts as follows (QA):

(a) Tighten the bolts 180° apart to 45 lb. in. then to 65 lb. in.

(b) Rotate 90° around bolt circle and tighten bolts 180° apart to 45 lb. in. then to 65 lb. in.

(c) Repeat criss-cross torque procedure until all bolts are torqued to 45 lb. in. then to 65 lb. in.

(d) Repeat criss-cross torque procedure until specified torque of 70-85 lb. in. is met

(e) Lockwire to secure bolts in set of three.

n. Install screws (9) and Lockwire.

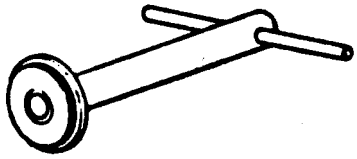

Figure 16. 6796569 Turbine Rotor Axial Movement Positioning Wrench

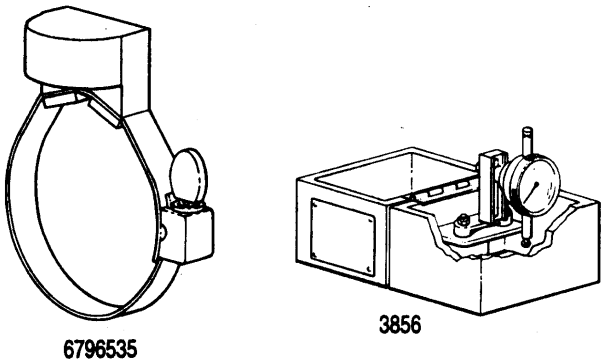

Figure 17. 3856 Axial Clearance Gage and 6796535 Gage Adapter

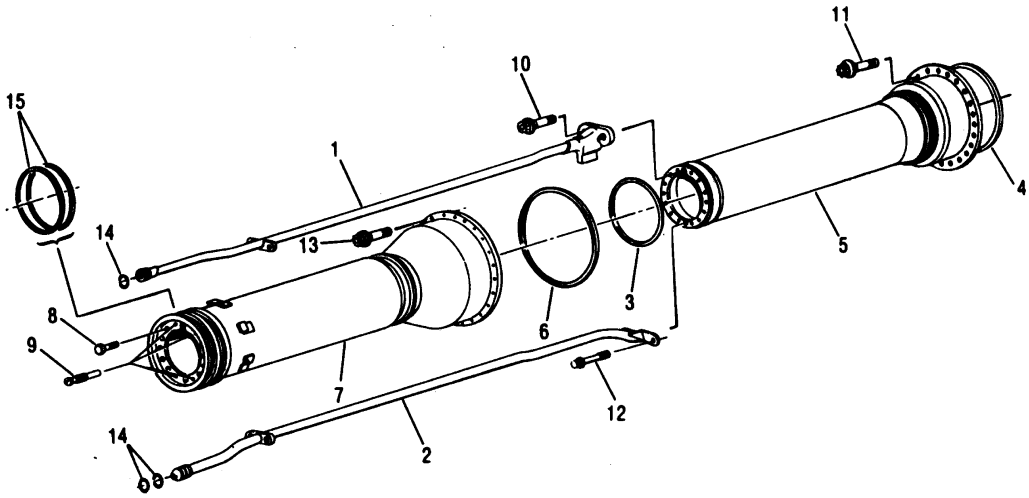

1. Pressure Oil Tube
2. Scavenge Oil Tube
3. Metallic O-ring Seal
4. Metallic O-ring Seal
5. Combustion Chamber Inner Casing Liner
6. Metal Gasket
7. Combustion Chamber Inner Casing
8. Bolt (10)
9. Screw (4)
10. Bolt
11. Bolt
12. Bolt
13. Bolt
14. Preformed Packing
15. Split Seal Piston Ring

Figure 18. Combustion Chamber Inner Casing, Inner Casing Liner, and Oil Tubes

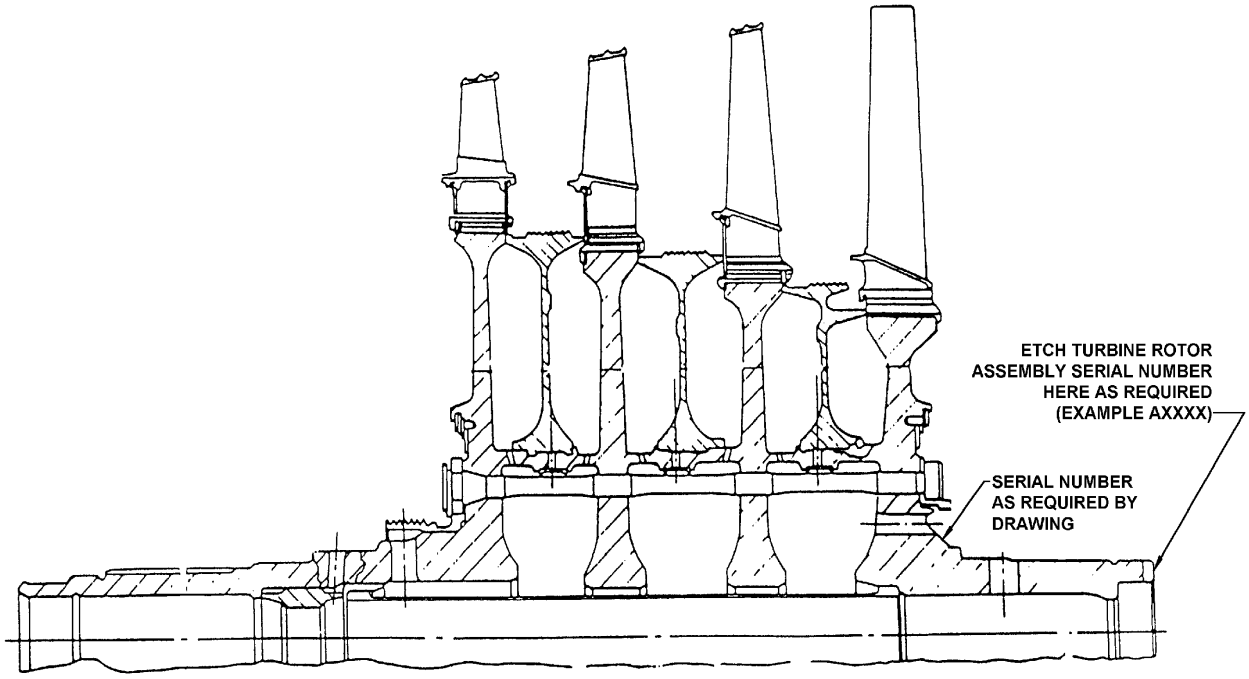

Figure 19. Turbine Rotor Assembly Serial Number Location

INTERMEDIATE MAINTENANCE

MAINTENANCE

INNER REAR EXHAUST CONE ASSEMBLY, REAR THERMAL INSULATION BLANKET, (REAR) TURBINE SCAVENGE OIL PUMP ASSEMBLY AND TURBINE SCAVENGE OIL PUMP SUPPORT ASSEMBLY

Reference Material

Turbine Unit Parts – Cleaning, Inspection, and Repair . . . . . WP 054 00

Alphabetical Index

Subject	Page No.
Cleaning	2
Inspection	3
Installation	3
Removal	2

Record of Applicable Technical Directives

None

1. **REMOVAL.**

Support Equipment Required

Part No./Type Designation	Nomenclature
CG250–8A–9	Hammer, 2 lb Slide
CJ84–10	Adapter

WARNING

Allow sufficient cooling time before attempting to remove the inner rear exhaust cone.

a. Remove bolts (13, figure 1) holding inner rear exhaust cone (12) to engine.

b. Remove inner rear exhaust cone, using CJ84–10 adapter and CG250–8A–9 slide hammer.

c. Remove nut (11) and discard.

d. Remove thermal insulation blanket (9).

e. Remove bolts (8) attaching exhaust cone mounting ring (7) and pump support (6).

f. Remove exhaust cone mounting ring (7) and pump support with turbine rear scavenge oil pump (3) attached.

g. Remove metal O–ring (5).

NOTE

Maintain pump drive gear shaft, bevel shaft gear and scavenge pump as matched assemblies when removing and installing.

h. Remove bolts (2). Remove turbine rear scavenge oil pump from pump support.

i. Remove metal O–ring gasket (4).

j. Remove preformed packing (1).

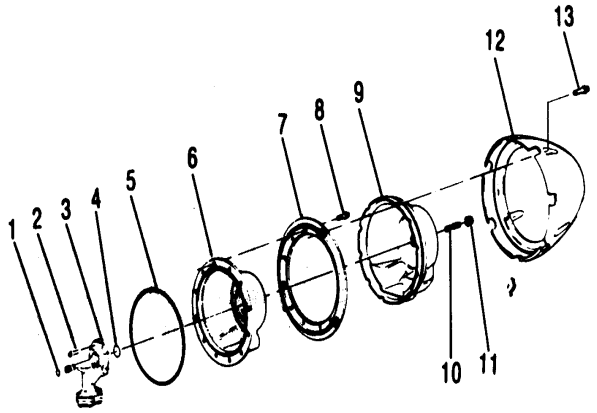

1. Preformed Packing
2. Bolt
3. Turbine Rear Scavenge Oil Pump
4. Metal O–Ring Gasket
5. Metal O–Ring
6. Pump Support
7. Ring, Exhaust Cone Mounting
8. Bolt
9. Thermal Insulation Blanket
10. Stud
11. Nut
12. Inner Rear Exhaust Cone
13. Bolt

Figure 1. Turbine Rear Scavenge Oil Pump and Details

2. **CLEANING.**

Materials Required

Specification No./Part No.	Nomenclature
MIL-PRF-680, Type II	Solvent, cleaning

Dry Cleaning Solvent
MIL–PRF–680, Type II **3**

a. Remove any carbon build–up in sump area and clean support with MIL–PRF–680, Type II cleaning solvent.

3. **INSPECTION.**

Materials Required

Specification No./Part No.	Nomenclature
MIL–PRF–23699	Oil, lubricating

a. Inspect inner rear exhaust cone per WP 054 00.

b. Replace thermal insulation blanket if inner and outer linings touch each other.

c. Replace thermal insulation blanket if any cracks or tears exceed 3/4 inch in length or holes exceed 1/2 square inch.

d. Inspect shaftgear and drive gear shaft for gear tooth wear or any unusual pattern. There shall be no steps or hollows on the tooth surfaces as determined visually.

e. Inspect drive gear shaft bushing for wear or damage. Replace pump for any amount of wear.

Lubricating Oil, MIL–PRF–23699 2

f. Apply MIL–PRF–23699 engine oil to shafts and gears. Pump shall turn freely by hand without binding.

g. Replace pump support if cracked in welded area, at base flange, vortex or side.

4. **INSTALLATION.**

Support Equipment Required

Part No./Type Designation	Nomenclature
---	Wrench, torque (0–200 lb in.)

Materials Required

Specification No./Part No.	Nomenclature
AS3085–011	Packing
NS165	Compund, Anti–seize

Materials Required (cont)

Specification No./Part No.	Nomenclature
MIL–PRF–23699	Oil, lubricating
MS20995C32	Lockwire, 0.032 inch
MS9204–029	Gasket, Metal O–ring
6843618–048	Nut, self–locking
6844716	Gasket, Metal O–ring

Lubricating Oil, MIL–PRF–23699 2

a. Apply MIL–PRF–23699 engine oil to preformed packing (1, figure 1). Install on turbine rear scavenge oil pump (3) drive gear shaft.

b. Install a new metal O–ring gasket (4) on turbine rear scavenge oil pump.

c. Install metal O–ring (5) on pump support (6).

Anti–seize Compound (Never Seez) NS165 32

d. Apply NS165 compound to stud threads inside pump support.

e. Install turbine rear scavenge oil pump in pump support.

f. Install bolts (2). Torque to 70–85 lb in. Lockwire. (QA)

CAUTION

Pump bevel gears must turn freely by hand after installation in support housing.

g. Install pump support (6) and exhaust cone mounting ring (7) in back of turbine.

h. Install and tighten bolts (8) around exhaust cone mounting ring (7) in a circumferential direction. Continue tightening bolts in this manner until gasket firmly seats. Torque bolts to 100–110 lb in. Lockwire (QA)

i. Install thermal insulation blanket (9).

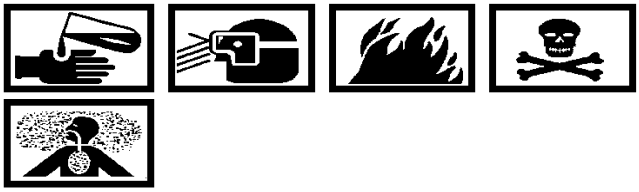

Anti–seize Compound (Never Seez) NS165 32

j. Apply NS165 compound to threads of stud (10) and install a new nut (11). Torque nut to 74–89 lb. in. (QA)

k. Install inner rear exhaust cone (12).

Anti–seize Compound (Never Seez) NS165 32

l. Apply NS165 compound to threads of bolts (13).

m. Secure exhaust cone with bolts. Torque to 74–89 lb. in. (QA)

INTERMEDIATE MAINTENANCE

MAINTENANCE

FUEL AND AIR HOSES AND METAL TUBING

Reference Material

Fuel Hose Pressure Test Requirements	MIL–H–25579
Illustrated Parts Breakdown	NAVAIR 02B–5DG–4
Wire Braid Repair	MIL–S–6872
Fuel Hose Repair	NAVAIR 01–1A–20

Alphabetical Index

Subject	Page No.
Air Hose Servicing	3
Assembly	3
Cleaning	3
Inspection	3
Repair	3
Testing	3
Fuel Hose Servicing	2
Cleaning	2
Description	2
Inspection	2
Repair	3
Metal Tubing Servicing	4
Cleaning	4
Inspection	4
Repair	4

Record of Applicable Technical Directives

None

1. **FUEL HOSE SERVICING.**

WARNING

Use care in handling braid covered hose. Broken wire braid can cause injury.

CAUTION

When separating hoses or piping at flaired tube fittings, carefully inspect the fittings for the presence of metal gaskets. These gaskets must be discarded and replaced at reassembly. (Refer to NAVAIR 02B–5DG–4.)

2. DESCRIPTION.

a. Fuel hose is composed of a smooth tube specially compounded from teflon.

b. A corrosion proof stainless steel high density wire reinforcement is braided over the teflon tube.

c. Specially designed and matched couplings are used in straight, elbow, or special designs.

d. Fuel hose assemblies include a fire resistant sleeving

e. The wrap around style is for replacement of original fireshield when required.

(1) One is tubular retained with CRES (corrosion resistant steel) bands and CRES identification bands covered with a protective sleeving.

(2) Another is insulation sleeving wrapped and secured to hose with lockwire or loop clamps.

f. These hoses have part No. identification marked on outer lip of hexagon coupling nut.

3. CLEANING.

Materials Required

Specification No./Part No.	Nomenclature
O–S–576	Sodium bicarbonate
H–B–178	Brush
MIL–C–85043	Cloth, low lint
MIL-PRF-680, Type II	Solvent, cleaning

a. Do not immerse in any cleaning agent.

Dry Cleaning Solvent
MIL–PRF–680, Type II **3**

b. Clean externally with a low lint cloth, or brush dampened with a cleaning agent.

c. Flush internally and air dry.

4. INSPECTION.

Materials Required

Specification No./Part No.	Nomenclature
O–S–576	Sodium bicarbonate
H–B–178	Brush

a. Visually inspect fire sleeving and fittings for damage. Replace fire sleeving if there is any visual damage or deterioration and replace with insulation sleeving as follows:

(1) Remove insulation sleeving by removing lockwire or loop clamps and sleeving.

CAUTION

Extreme care must be exercised to avoid cutting or otherwise damaging wire braid or fittings.

(2) Remove tubular sleeve retaining bands and identification bands and remove sleeve from hose using a sharp knife or tool.

(3) While sleeving is removed, inspect hose for any sign of damage to wire braid. Several random breaks in wire braid throughout length of hose are acceptable providing breaks are on single wires only. If 50% or more of any one braid plait (composed of three or more wires per plait) are broken, hose is not acceptable and shall be replaced.

(4) Inspect wire braid for discoloration. Remove discoloration as follows:

(a) Mix a solution using two to four ounces of sodium bicarbonate to one gallon of water.

(b) Cap hose ends and, using fiber brush, brush solution on wire braid until discoloration is removed. Follow with cold water rinse to neutralize the solution. Air dry.

NOTE

Hose must be completely dry.

(5) Inspect wire braid for evidence of corrosion or pitting, using a 15 or more power magnification glass. Any evidence of corrosion, cracking or pitting shall be cause for rejection.

(6) Kinked or twisted teflon hoses are not acceptable. Replace kinked or twisted hoses.

5. REPAIR. Refer to NAVAIR 01–1A–20 for repair of hose.

6. **AIR HOSE SERVICING**.

Materials Required

Specification No./Part No.	Nomenclature
QQ–S–571	Solder

7. CLEANING. Refer to paragraph 3.

8. INSPECTION. Inspect wire braid covering for broken wires. Random breaks in wire braid are acceptable provided break in any one location does not exceed three wires per braid plait. Bends, kinks and minor separation on individual plaits are acceptable.

9. REPAIR. Repair broken wire braid, if within the limits of inspection, as follows:

CAUTION

Use care during soldering to prevent damage to the inner hose wall.

a. Repair all broken wires by trimming loose ends and soldering them to remaining plait in accordance with Spec MIL–S–6872.

b. Use solder conforming to QQ–S–571C, Composition Ag 5.5, Ag 2.5 or Ag 1.5, Type AC, Form W.

c. Where major wire separation has occurred, solder the wires together in accordance with step a.

d. No more than six soldered areas shall be accepted per linear foot of braided length.

10. ASSEMBLY. Reassemble the hose assembly in a manner to prevent the damaged area from rubbing against nearby objects when installed on the engine.

11. TESTING. Pressure test air hose assemblies at 250 psi.

12. **METAL TUBING SERVICING.**

Materials Required

Specification No./Part No.	Nomenclature
MIL-PRF-680, Type II	Solvent, cleaning

Dry Cleaning Solvent
MIL–PRF–680, Type II **3**

13. CLEANING. Thoroughly clean internal surfaces of the tube, using MIL–PRF–680, Type II solvent and air dry.

14. INSPECTION. Visually inspect all tubes and end flanges and coupling nuts for nicks, dents, cracks and evidence of chafing as follows:

a. Dents are acceptable if not restricting the tube opening more than 20 percent of its diameter.

b. Nicks, scoring or chafing is acceptable if not exceeding a depth of 15 percent of tube wall thickness.

c. Cracks are not acceptable.

d. Any visible penetration of tube wall surface by chafing, galling or fretting is cause for correction of the conditions that originated the damage.

15. REPAIR. Remove sharp or raised edges by stoning.

INTERMEDIATE MAINTENANCE

MAINTENANCE

DUAL ELEMENT FUEL PUMP ASSEMBLY

Reference Material

External Tubing, Cabling, and Clamping Supplement Manual . . . . . NAVAIR 02B–5DG–6–1–1

Alphabetical Index

Subject Page No.
Cleaning 2
Inspection 2
Installation 5
Removal 2
Repair 2

Record of Applicable Technical Directives

None

1. **REMOVAL**.

Support Equipment Required

Part No./Type Designation	Nomenclature
CX1416	Wrench, fuel pump flange nut

a. Refer to NAVAIR 02B–5DG–6–1–1 for locations of all external tubing, cabling and clamping.

b. Disconnect electrical connectors to paralleling valve solenoid (1, figure 2).

c. Remove fuel pump hoses (2, 3, 4, 5, and 6) from high pressure fuel filter and fuel pump.

d. Remove lockwire, bolts (36, figure 1) washers (37) and brackets (38 and 39) from high pressure fuel filter assembly (24).

e. Remove high pressure fuel filter assembly from fuel pump (3). Remove and discard preformed packings (23).

f. Remove fuel pump nuts (4) and washers (5), using CX 1416 wrench. Remove fuel pump and gasket (15) from accessory drive housing. Discard gasket.

g. When fuel pump is to be replaced, remove all fittings for installation on replacement pump. Discard preformed packings.

2. **CLEANING**.

Materials Required

Specification No./Part No.	Nomenclature
MIL-PRF-680, Type II	Solvent, dry cleaning
ISOPREP	Metal cleaner, silicate soap
–––	Caps, protective
–––	Plugs, protective

a. Close all openings with protective caps or plugs before applying cleaning solvent or soap.

Dry Cleaning Solvent
MIL–PRF–680, Type II **3**

Dry Cleaning Solvent (Isoprep) **8**

b. Clean exterior of fuel pump with MIL–PRF–680, Type II dry cleaning solvent or ISOPREP soap.

c. Rinse parts with water after using soap and air dry.

3. **INSPECTION**.

Support Equipment Required

Part No./Type Designation	Nomenclature
6796461	Puller, fuel pump drive oil seal

a. Inspect drive coupling (9, figure 1) and diaphragm seal (11) for wear, leakage, and damage. No wear, damage, or leakage permitted.

b. When diaphragm seal is leaking, remove diaphragm seal, using 6796461 puller.

c. Inspect pump housing for cracks. No cracks permitted.

4. **REPAIR**.

Support Equipment Required

Part No./Type Designation	Nomenclature
–––	Wrench, torque (0–50 lb in.)

a. Replace diaphragm seal (11, figure 1), drive coupling (9) and attaching parts in accordance with figure 1. Torque screws (16) to 40 – 45 lb in. (QA)

b. Replace pump if not serviceable.

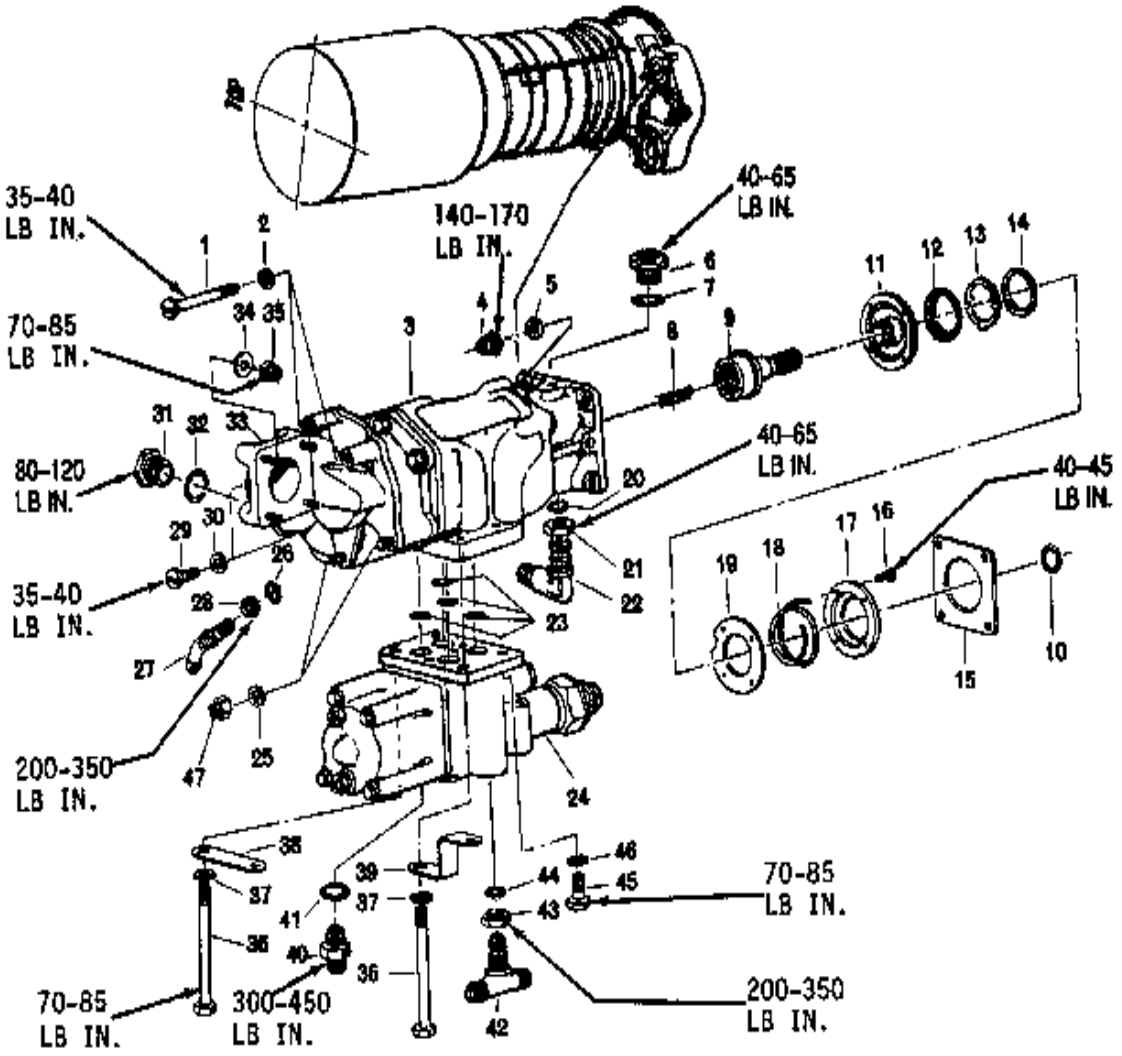

1. Screw
2. Washer
3. Fuel Pump
4. Nut
5. Washer
6. Plug
7. Preformed Packing
8. Drive Spring
9. Drive Coupling
10. Preformed Packing
11. Diaphragm Seal
12. Diaphragm Guide
13. Seal Tab Washer
14. Seal Spring Washer
15. Gasket
16. Screw
17. Thrust Plate
18. Seal Spring
19. Seal Stop
20. Preformed Packing
21. Nut
22. Elbow
23. Preformed Packing
24. High Pressure Fuel Filter Assembly
25. Washer
26. Preformed Packing
27. Elbow
28. Nut
29. Screw
30. Washer
31. Plug
32. Preformed Packing
33. Impeller Housing
34. Washer
35. Nut
36. Bolt
37. Washer
38. Bracket
39. Bracket
40. Union
41. Preformed Packing
42. Tee
43. Nut
44. Preformed Packing
45. Bolt
46. Washer
47. Nut

Figure 1. Dual Element Fuel Pump Details

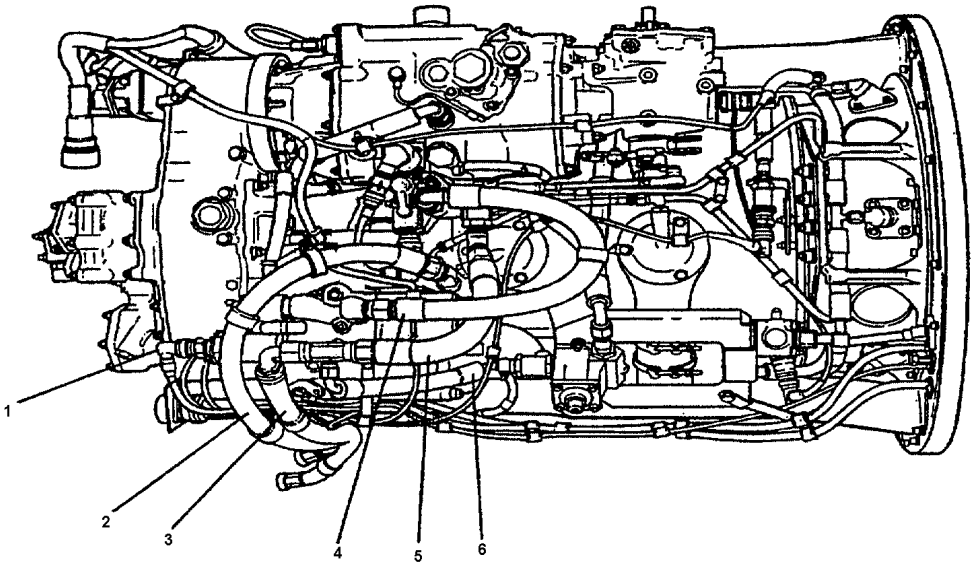

1. Connector, Paralleling Valve Solenoid
2. Hose, Boost Pump Outlet to No. 1 Filter Inlet
3. Hose, No. 1 Filter Outlet to Fuel Pump Bypass
4. Hose, Fuel Pump Outlet to Trim Valve Inlet
5. Hose, Trim Valve Bypass to Fuel Pump Bypass
6. Hose, Flow Limiter Valve Bypass to Fuel Pump Bypass

Figure 2. Hose and Wiring Details for Dual Element Fuel Pump.

5. **INSTALLATION**.

Support Equipment Required

Part No./Type Designation	Nomenclature
–––	Wrench, torque (0–600 lb in.)

Materials Required

Specification No./Part No.	Nomenclature
MIL–PRF–23699	Oil, lubricating
MIL–PRF–6081, grade 1010	Oil, lubricating
MS20995C32	Lockwire, 0.032 inch
MS9021–213	Packing, preformed (4)
MS9135–01	Gasket
6877242–007	Packing, preformed

a. Refer to NAVAIR 02B–5DG–6–1–1 for locations of all external tubing, cabling and clamping.

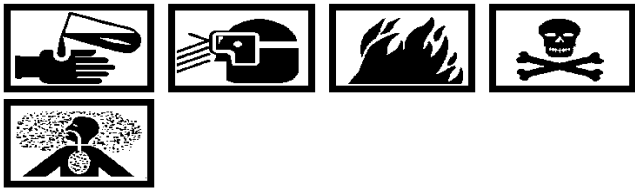

Lubricating Oil, MIL–PRF–6081, (Grade 1010) **7**

b. Install new MS9021–213 preformed packings (23, figure 1) on fuel pump (3). Apply a light coat of MIL–PRF–6081, grade 1010 lubricating oil to preformed packings.

c. Install high pressure fuel filter to fuel pump with brackets (38 and 39), washers (37) and bolts (36). Torque bolts to 70–85 lb in. and lockwire. (QA)

d. Install new 6877242–007 preformed packing (10) on drive coupling (9).

CAUTION

Do not use grease on splines.

Lubricating Oil, MIL–PRF–23699 **2**

e. Apply MIL–PRF–23699 lubricating oil to drive coupling splines.

Lubricating Oil, MIL–PRF–6081, (Grade 1010) **7**

f. Apply MIL–PRF–6081, grade 1010 lubricating oil to fuel fittings, if removed and install on fuel pump.

g. Install fuel pump and new MS9135–01 gasket (15) on accessory housing. Install washers (5) and nuts (4). Torque nut to 140–170 lb in. (QA)

h. Connect boost pump outlet to No. 1 filter inlet hose (2). Torque to 200 – 350 lb in. (QA)

i. Connect No. 1 filter outlet to fuel pump bypass hose (3). Torque to 475 – 575 lb in. (QA)

j. Connect fuel pump outlet to trim valve inlet hose (4). Torque to 475 – 575 lb in. (QA)

k. Connect trim valve bypass to fuel pump bypass hose (5). Torque to 250 – 250 lb in. (QA)

l. Connect flow limiter valve bypass to fuel pump bypass hose (6). Torque to 200 – 250 lb in. (QA)

NOTE

Install electrical coupling nuts dry.

m. Install electrical connector to paralleling valve solenoid (1). Tighten connector and lockwire. (QA)

n. Secure clamps to brackets at low pressure fuel filter hose and harness. Torque nuts to 37 – 42 lb in. (QA)

INTERMEDIATE MAINTENANCE

MAINTENANCE

HIGH–PRESSURE FUEL PUMP FILTER

Reference Material

External Tubing, Cabling, and Clamping Supplement Manual . . . . . NAVAIR 02B–5DG–6–1–1
Paralleling Valve . . . . . WP 060 00
Pressure Switch . . . . . WP 063 00

Alphabetical Index

Subject Page No.
Assembly 4
Cleaning 2
Disassembly 2
Inspection 4
Installation 5
Removal 2
Repair 4

Record of Applicable Technical Directives

None

1. **REMOVAL.**

a. Refer to NAVAIR 02B–5DG–6–1–1 for locations of all external piping, cabling and clamping.

b. Remove clamps which secure low–pressure fuel filter boost outlet–to–No. 1 filter inlet hose and RH wiring harness to brackets.

c. Remove lockwire and disconnect electrical connections to pressure switch (14, figure 1) and paralleling valve (12).

d. Disconnect fuel hoses to high pressure fuel filter as follows:

(1) Fuel limiting valve bypass hose to tee in bypass port.

(2) Trim valve bypass hose to tee in bypass port.

(3) No. 1 filter outlet hose to tee in bypass port.

(4) Trim valve inlet hose to outlet port.

e. Remove lockwire, bolts (39), washers (40), and brackets (41 and 42) from high pressure fuel filter (32). Remove high pressure filter from fuel pump (30).

f. Remove and discard preformed packing (31) from mounting flange.

g. When fuel filter assembly is to be replaced, remove all fittings necessary for installation in replacement assembly. Remove and discard preformed packings from fittings.

2. **DISASSEMBLY.**

NOTE

Do not disassemble filter except for ultrasonic cleaning or parts replacement.

a. Remove bolts (1, figure 1) and washers (2) from cover (3).

b. Remove cover (3) from body (7).

c. Remove preformed packings (4 and 6).

d. Compress retainer (26) and remove disc and stud assembly (5) from cover (3).

e. Remove lockwire, special nut (27) filter packs (24) and spacers (25) from perforated tube (23).

f. Remove plug and bleeders (29) and preformed packings (28).

g. Refer to WP 063 00 for removal of pressure switch.

h. Refer to WP 060 00 for removal of paralleling valve.

3. **CLEANING.**

Materials Required

Specification No./Part No.	Nomenclature
MIL–PRF–680, Type II	Solvent, cleaning
MIL–PRF–6081, grade 1010	Oil, lubricating

a. Ultrasonic cleaning of disc–type and pleated element filters is not recommended. Replace the element.

NOTE

Do not overlap filter packs when placing them in the ultrasonic cleaner.

Fuel and oil filters should not be cleaned simultaneously. Drain, clean and refill the cleaner tank with clean solution when changing from oil to fuel filters or from fuel to oil filters.

(1) Place filter packs in ultrasonic cleaner. Refer to the applicable ultrasonic cleaner instructions.

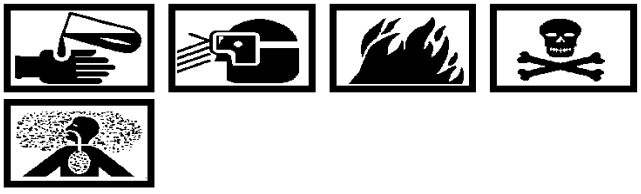

Dry Cleaning Solvent
MIL–PRF–680, Type II **3**

(2) Clean all remaining parts of the disc and stud assembly in MIL–PRF–680, Type II cleaning solvent.

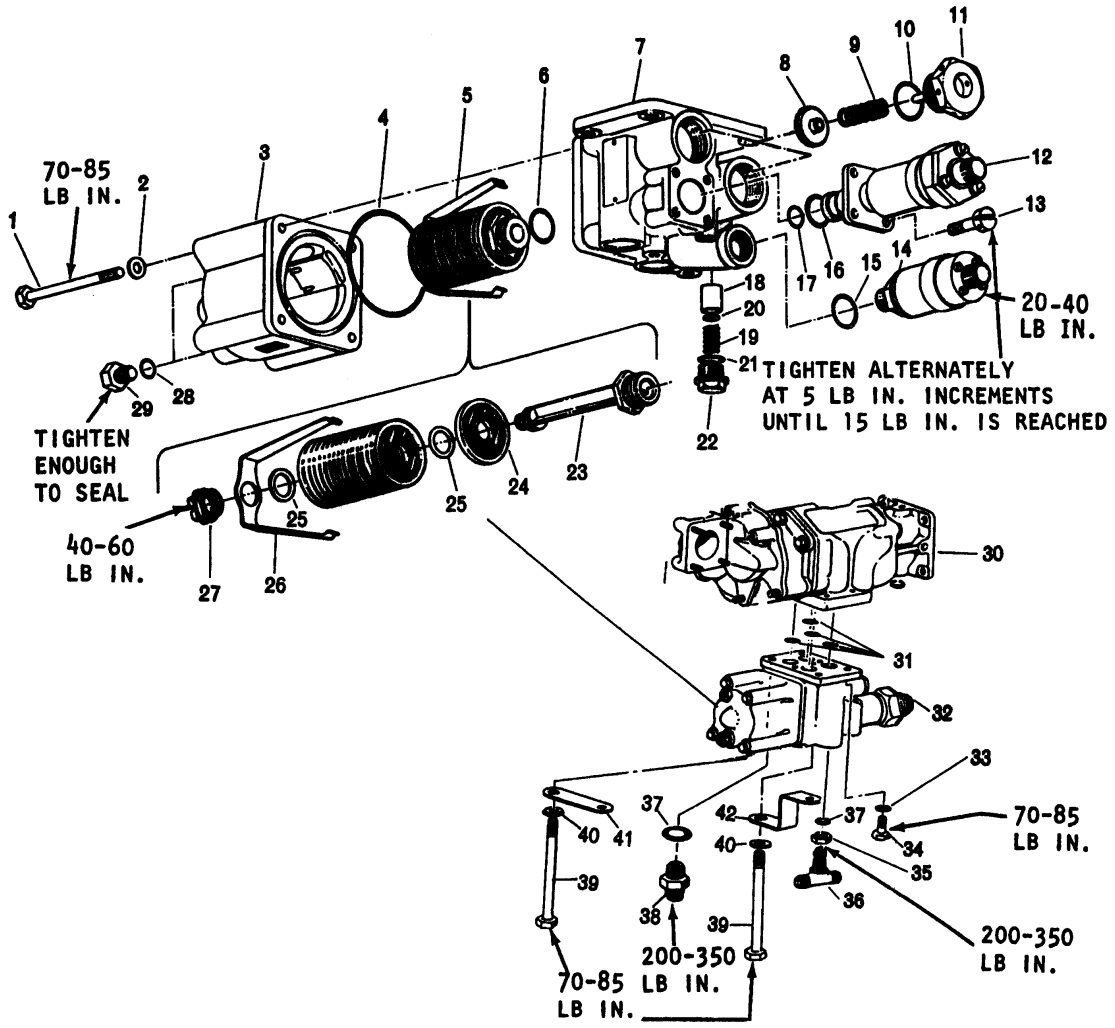

1. Bolt
2. Washer
3. Cover
4. Preformed Packing
5. Disc and Stud Assembly
6. Preformed Packing
7. Body
8. Check Valve
9. Spring
10. Preformed Packing
11. Check Valve Guide
12. Paralleling Valve
13. Screw
14. Pressure Switch
15. Preformed Packing
16. Preformed Packing
17. Preformed Packing
18. Fuel Filter Bypass Valve
19. Spring
20. Washer
21. Preformed Packing
22. Plug
23. Perforated Tube
24. Filter Pack (17)
25. Spacer (17)
26. Retainer
27. Special Nut
28. Preformed Packing
29. Plug and Bleeder
30. Fuel Pump
31. Preformed Packing
32. High Pressure Fuel Filter
33. Washer
34. Bolt
35. Nut
36. Tee
37. Preformed Packing
38. Union
39. Bolt
40. Washer
41. Bracket
42. Bracket

Figure 1. High-Pressure Fuel Filter Details

CAUTION

Do not use tape over opening.

Lubricating Oil, MIL–PRF–6081, (Grade 1010) **7**

Dry Cleaning Solvent MIL–PRF–680, Type II **3**

NOTE

If filter packs are to be stored for any length of time, preserve the cleaned filter packs by dipping them in clean MIL–PRF–6081, grade 1010, oil, then wrapping them in treated paper. Rinse and clean filter packs with MIL–PRF–680, Type II cleaning solvent thoroughly of foreign matter before reassembly.

(3) Plug check valve opening in body (7). Clean inside of body with MIL–PRF–680, Type II cleaning solvent.

b. If ultrasonic cleaning equipment is not available, leave disc and stud assembly assembled and proceed as follows:

CAUTION

Use extreme care to prevent entry of dirt into the inner passage of disc and stud assembly.

(1) Use a soft bristle brush and wash disc and stud assembly in MIL–PRF–680, Type II cleaning solvent.

(2) Dry disc and stud assembly with low–pressure air.

(3) Plug check valve (8) opening in the body (7). Clean inside of body with MIL–PRF–680, Type II cleaning solvent.

4. **INSPECTION.**

a. Inspect the filter for damage. If damaged, replace filter.

b. Check the thickness of filter packs at the inside diameter; a filter pack which is less than 0.107 inch in height (at ID) is considered collapsed.

5. **REPAIR.**

a. No repair allowed. Replace all parts found unserviceable.

b. Replace filter packs that are in poor condition and are less than 0.107 inch in height.

6. **ASSEMBLY.**

Support Equipment Required

Part No./Type Designation	Nomenclature
–––	Wrench, torque (0–150 lb in)

Materials Required

Specification No./Part No.	Nomenclature
MS20995C32	Lockwire, 0.032 inch

a. Starting with a filter pack (24, figure 1), alternately place filter packs and spacers (25) on perforated tube (23). A complete stack includes 17 filter packs and 17 spacers. Install so that the flat side of filter packs are in the same direction. (QA)

CAUTION

To prevent damage to filter packs, do not exceed maximum torque. Excessive torque will cause filter pack(s) to collapse.

The distance between the shoulder of the stud or perforated tube and the face of the nut after tightening, shall be a minimum of 0.016 inch.

Do not install preformed packing in the groove on the small end of disc and stud assembly.

NOTE

If the nut "bottoms out" and a loose condition exists in the disc and stud assembly a maximum of two additional spacers may be added to either end of the disc and stud assembly to obtain the required torque. (Refer to paragraph 5, step b, for checking filter packs.)

b. Install retainer (26) and special nut (27) on perforated tube. Tighten nut to 40–60 lb in. and lockwire. (QA)

c. Compress retainer and install disc and stud assembly (5) in cover (3).

7. **INSTALLATION.**

Materials Required

Specification No./Part No.	Nomenclature
MIL–PRF–6081, Grade 1010	Oil, lubricating
MS20995C32	Lockwire, 0.032 inch
MS9020–04	Packing, Preformed
MS9021–115	Packing, Preformed
MS9021–213	Packing, Preformed (4)
MS9021–231	Packing, Preformed

a. Refer to NAVAIR 02B–5DG–6–1–1 for locations of all external piping, cabling and clamping.

Lubricating Oil, MIL–PRF–6081, (Grade 1010) 7

b. Install preformed packing (6, figure 1) on large end of perforated tube (23) and install preformed packing (4) in groove of cover (3). Apply a light coat of MIL–PRF–6081, lubricant oil to preformed packings.

c. Secure cover with disc and stud assembly (5) to body (7) with washers (2) and bolts (1). Torque bolts to 70–85 lb in. Lockwire bolts. (QA)

d. Install preformed packings (28) on plug and bleeders (29). Apply a light coat of MIL–PRF–6081, lubricating oil, then, install plug in cover (3). Tighten plug enough to seal and lockwire. (QA)

e. Install preformed packings (31) on fuel pump (30). Apply a light coat of MIL–PRF–6081, lubricating oil to preformed packings.

f. Install body to fuel pump with harness brackets (41 and 42), washers (40) and bolts (39). Torque bolts to 70–85 lb in. Lockwire bolts. (QA)

g. Install fuel hoses to high pressure fuel filter as follows:

(1) Fuel limiting valve bypass hose to tee in bypass port.

(2) Trim valve bypass hose to tee in bypass port.

(3) No. 1 filter outlet hose to tee in bypass port.

(4) Trim valve inlet hose to outlet port.

h. Secure clamps on harness lead and fuel pump boost outlet–to–No. 1 filter inlet hose to the brackets.

i. Refer to WP 063 00 and WP 060 00 for installation of pressure switch and paralleling valve.

j. Install electrical connections to pressure switch and paralleling valve. Tighten connections and lock wire. (QA)

INTERMEDIATE MAINTENANCE

MAINTENANCE

PARALLELING VALVE

Reference Material

Troubleshooting . . . . . WP 025 00

Alphabetical Index

Subject	Page No.
Cleaning	2
Inspection	3
Installation	3
Removal	2
Repair	3

Record of Applicable Technical Directives

None

1. **REMOVAL**.

Support Equipment Required

Part No./Type Designation	Nomenclature
T27341	Puller–Mechanical, Solenoid Valve Seat

a. Remove lockwire and disconnect electrical connection.

b. Remove lockwire and remove solenoid coil assembly (1, figure 1) from valve seat (8) and retainer plate (2).

c. Remove lockwire and remove four screws (3) which secure valve seat (8) and retainer plate (2) to fuel filter body (4, figure 2).

d. Remove valve seat and retainer plate from fuel filter body, using T27341 puller. Remove and discard preformed packings (2 and 3) from valve seat.

2. **CLEANING**.

Materials Required

Specification No./Part No.	Nomenclature
MIL–PRF–680, Type II	Solvent, cleaning

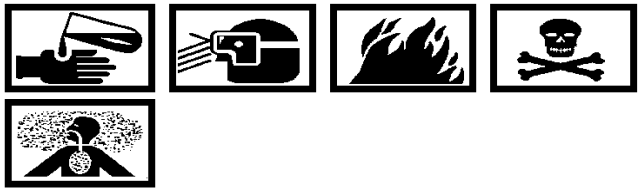

Dry Cleaning Solvent MIL–PRF–680, Type II **3**

a. Clean exterior of paralleling valve with MIL–PRF–680, Type II cleaning solvent.

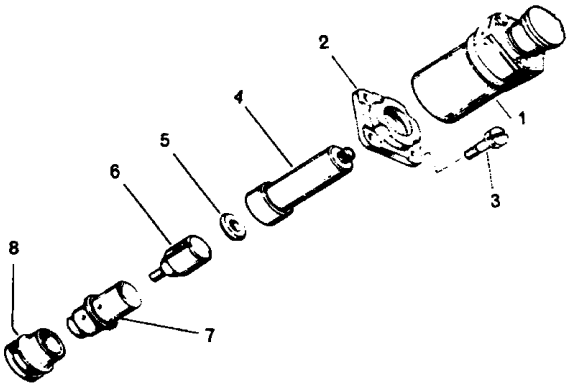

1. Solenoid Coil Assembly
2. Retainer Plate
3. Screw
4. Solenoid Sleeve
5. Spacer
6. Armature
7. Pilot and Plunger Assembly
8. Valve Seat

Figure 1. Paralleling Valve Details

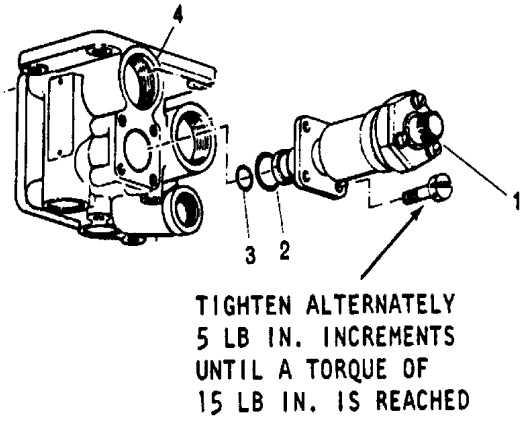

1. Paralleling Valve
2. Packing
3. Packing
4. Fuel Filter Body

Figure 2. Paralleling Valve

3. **INSPECTION**.

Support Equipment Required

Part No./Type Designation	Nomenclature
ZA–43	Kit, fluorescent dye penetrant
6799150	Test set, electrical components checkout

Fluorescent Dye Penetrant ZA–43 **17**

a. Inspect housing for cracks, using the dye check method of inspection and Fluorescent Dye Penetrant Kit No. ZA–43.

b. Using test set 6799150, inspect contact areas of pilot and plunger assembly (7, figure 1), armature (6) and inside of solenoid sleeve (4) for nicks, scores, and slight scratches.

4. **REPAIR**.

Materials Required

Specification No./Part No.	Nomenclature
A–A–1206	Crocus cloth

a. Remove nicks, scores, and slight scratches by polishing surfaces lightly with a fine grade of wet crocus cloth.

5. **INSTALLATION**.

Support Equipment Required

Part No./Type Designation	Nomenclature
–––	Wrench, torque (0–150 lbs in.)

Materials Required

Specification No./Part No.	Nomenclature
MIL–PRF–6081, grade 1010	Oil, lubricating
MS20995C32	Lockwire, 0.032 inch
MS9021–112	Packing, preformed
MS9021–116	Packing, preformed

Lubricating Oil, MIL–PRF–6081, (Grade 1010) **7**

a. Apply a light coat of MIL–PRF–6081, Grade 1010 lubricating oil, to new preformed packings and mating diameters.

CAUTION

Use extreme care when installing paralleling valve to prevent damage to the valve seat and to ensure that preformed packings (2 and 3, figure 2) remain in place.

b. Install MS9021–112 preformed packing (3) into the groove on the end of the valve seat and MS9021–116 preformed packing (2) on outside diameter of valve seat. (See figure 3.)

c. Install valve seat (8, figure 1) and retainer plate (2) to fuel filter body (4, figure 2) with the valve seat positioned as shown in figure 4.

d. Install screws (3, figure 1). Torque alternately at 5 lb. in. increments until a torque of 15 lb. in. is reached for each screw. (See figure 2.) Lockwire. (QA)

NOTE

The valve retainer plate will not be tight against the fuel filter body after final tightening of screws.

e. Reassemble the solenoid coil assembly (1, figure 1) to valve. Tighten until a torque of 20–40 lb. in. is reached. Lockwire solenoid coil assembly to one of the valve retaining screws. (QA)

NOTE

Electrical connector index shall be in the up position.

f. Connect electrical connection. Torque to 30–50 lb in. Lockwire. (QA)

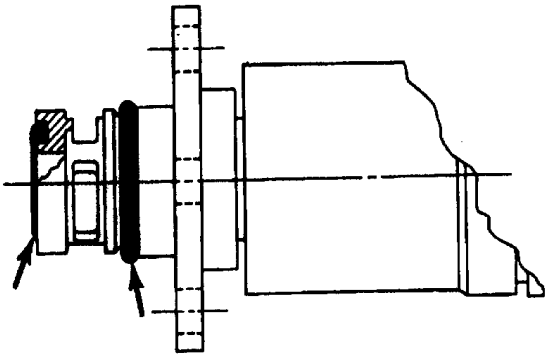

Figure 3. Paralleling Valve Packings Installation

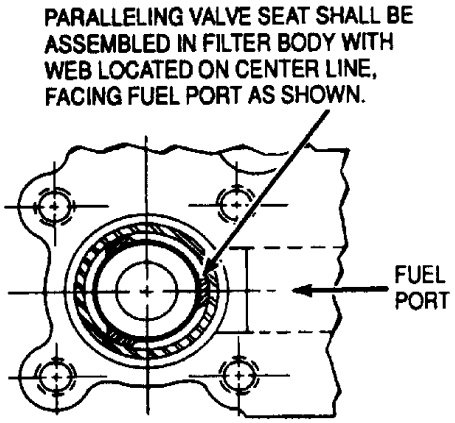

Figure 4. Paralleling Valve Seat Position in Filter Body

INTERMEDIATE MAINTENANCE

MAINTENANCE

LOW PRESSURE FUEL FILTERS AND ELEMENTS

Reference Material

T56 Engine Piping, Cabling and Clamping Supplement . . . . . NAVAIR 02B–5DG–6–1–1

Alphabetical Index

Subject	Page No.
Assembly	6
Cleaning	2
Disassembly	2
Inspection	5
Installation	7
Removal	2
Repair	6

Record of Applicable Technical Directives

None

1. **REMOVAL.**

a. Remove No. 2 filter outlet–to–No. 1 filter outlet hose (48, figure 1).

b. Remove lockwire and drain plug (5, figure 2) from bar (7) and drain filters.

c. Remove No. 1 filter inlet–to–No. 2 filter inlet hose (49, figure 1).

d. Remove No. 1 filter outlet–to–bypass port hose (50).

e. Remove fuel pump boost outlet–to–No. 1 filter hose (51).

f. When filter assemblies are to be separated after removal, remove fixed filter inlet and outlet pressure switch tubes (52 and 53).

g. Loosen nuts on clamps (41).

h. Remove engine bolts from bracket (35) and clamp (14).

i. Remove filter assembly from the engine.

j. Remove fittings in accordance with figure 1.

2. **DISASSEMBLY.**

Support Equipment Required

Part No./Type Designation	Nomenclature
6796974	Pliers, removal and installation, low pressure fuel filter retaining ring.
6796975	Depressor, spring, low pressure fuel filter element support

a. When elements require replacement, remove as follows:

NOTE

It is not necessary to remove filter assembly from engine to replace elements.

b. Remove lockwire and drain plug (5, figure 2) from bar (7) and drain fuel.

c. Loosen clamp (41, figure 1) on filter case.

d. Remove lockwire securing case (11, figure 2) to head (1).

NOTE

Do not discard element support plate (4).

e. Remove lockwire and loosen bar (7) until case and bar assembly (20) can be removed. Remove two filter elements (3) and element support plate (4) from case (11).

f. Remove and discard preformed packing (2) from head (1).

g. Disassemble case and bar assembly as follows:

(1) Install 6796975 spring depressor (figure 3) on bar (7, figure 2) and tighten hand knob until element support spring (12) is depressed.

(2) Remove retaining ring (15) using 6796974 pliers (figure 4).

(3) Remove support washer (14), element support plate (13), spring (12), and bar (7) from case (11). Remove and discard preformed packing from bar.

3. **CLEANING.**

Materials Required

Specification No./Part No.	Nomenclature
MIL–PRF–680, Type II	Solvent, cleaning

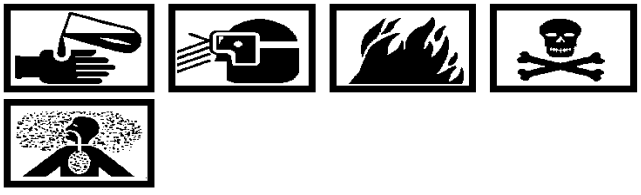

Dry Cleaning Solvent MIL–PRF–680, Type II **3**

a. Clean all parts in cleaning solvent MIL–PRF–680, Type II.

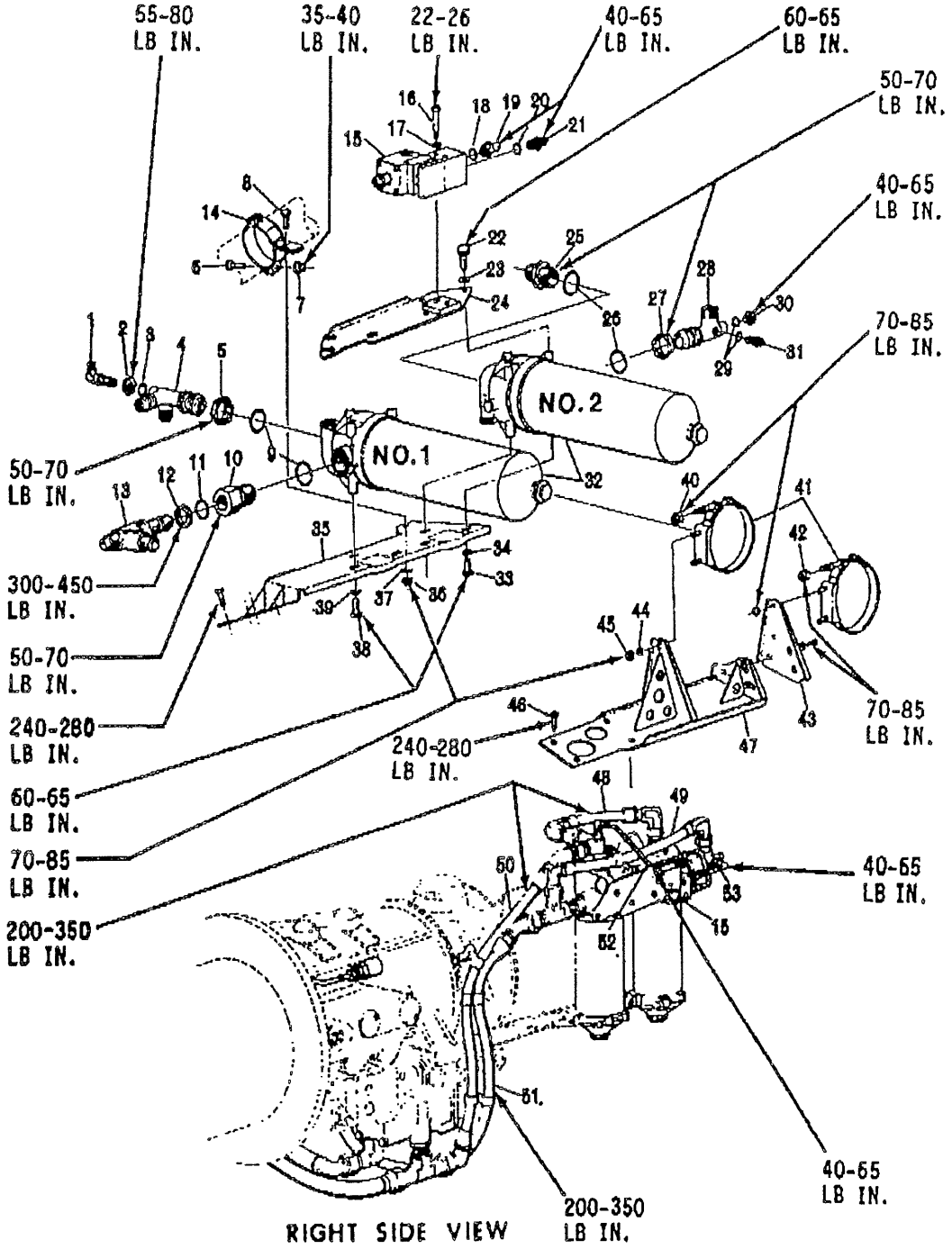

Figure 1. Low Pressure Fuel Filters Details (Sheet 1 of 2)

1. Elbow
2. Nut
3. Preformed Packing
4. Connector Outlet
5. Nut
6. Bolt
7. Nut
8. Bolt
9. Preformed Packing
10. Bushing Reducer
11. Preformed Packing
12. Nut
13. Tee
14. Clamp
15. Indicator, Pressure Differential
16. Bolt
17. Washer
18. Preformed Packing
19. Union
20. Preformed Packing
21. Union
22. Bolt
23. Washer
24. Bracket
25. Union
26. Preformed Packing
27. Nut
28. Connector
29. Preformed Packing
30. Plug
31. Union
32. Filter Assy, Fuel Double Double Paper Element (2)
33. Bolt
34. Washer
35. Bracket
36. Nut
37. Washer
38. Bolt
39. Washer
40. Nut
41. Clamp
42. Nut
43. Bracket
44. Washer
45. Nut
46. Bolt
47. Bracket
48. Hose, No. 2 Filter Outlet–to–No. 1 Filter Outlet
49. Hose, No. 1 Filter Inlet–to–No. 2 Filter Outlet
50. Hose, No. 1 Filter Outlet–to–Bypass Port
51. Hose , Fuel Pump Boost Outlet–to–No. 1 Filter
52. Tube, Fuel Filter Outlet–to–Pressure Switch
53. Tube, Fuel Filter Inlet–to–Pressure Switch

Figure 1. Low Pressure Fuel Filters Details (Sheet 2)

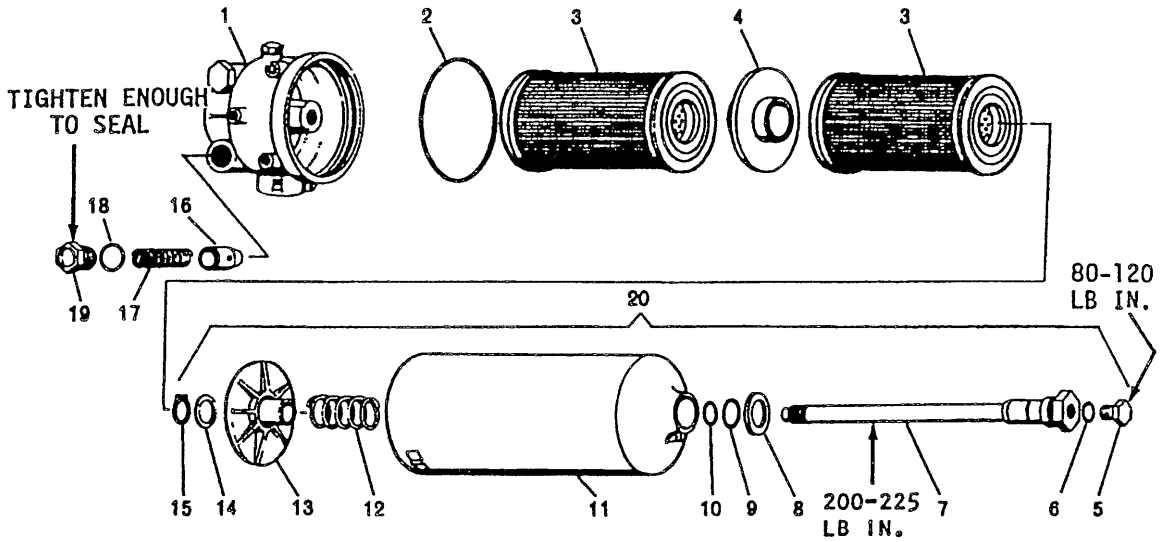

1. Head
2. Preformed Packing
3. Element
4. Element Support Plate
5. Drain Plug
6. Preformed Packing
7. Bar
8. Gasket
9. Preformed Packing
10. Preformed Packing
11. Case
12. Element Support Spring
13. Element Support Plate
14. Support Washer
15. Retaining Ring
16. Relief Valve Piston 2)
17. Relief Valve Spring (2)
18. Preformed Packing (2)
19. Relief Valve Plug (2)
20. Case and Bar Assembly

Figure 2. Low–pressure Fuel Filter Components

4. **INSPECTION.**

Materials Required

Specification No./Part No.	Nomenclature
ZA–43	Kit, fluorescent dye penetrant

a. Inspect relief valve springs and pistons for evidence of binding, abnormal operation or excessive wear.

b. Inspect relief valve seat for damage.

c. Replace defective or excessively damaged parts.

d. Inspect parts for nicks and scratches. Light nicks and scratches may be stoned smooth.

e. Inspect case as follows:

(1) Nicks and gouges shall not exceed 0.012 inch depth in cylinder or 0.035 inch in dome.

(2) Length of nicks or gouges shall not exceed 5/8 inch.

NOTE

In no case shall the blend exceed 0.012 inch in the cylinder or 0.035 inch in the dome.

(3) Blend nicks and gouges only to depth of the limits.

(4) Repair of dents is not allowable. Limits with no material removal are given in table 1.

Table 1. Allowable Dent Damage to Case

Affected Areas (Approx. Dia.)	Allowable Depth of Dent in Inches:	
	Cylinder	Dome
Less than 1 inch	0.047	0.082
1 to 2 inches	0.085	0.145
Greater than 2	0.125	0.210

Fluorescent Dye Penetrant ZA–43 **17**

(5) Fluorescent dye penetrant (kit ZA–43) inspect reworked area for cracks.

5. **REPAIR.**

a. Replace fuel filter elements in accordance with paragraph 6 and repair in accordance with limits identified in paragraph 4.

6. **ASSEMBLY.**

Support Equipment Required

Part No./Type Designation	Nomenclature
6796974	Pliers, removal and installation, low pressure fuel filter retaining ring
6796975	Depressor, spring, low pressure fuel filter element support

Materials Required

Specification No./Part No.	Nomenclature
MIL–PRF–6081, grade 1010	Oil, lubricating
MS20995C32	Lockwire, 0.032 inch
MS29512–06	Packing, preformed
MS29513–113	Packing, preformed
MS29513–116	Packing, preformed
MS29513–246	Packing, preformed
6808303	Element, filter

a. Reassemble case and bar assembly (20, figure 2) as follows:

(1) Install new gasket (8) on bar (7).

Lubricating Oil, MIL–PRF–6081, (Grade 1010) **7**

(2) Apply a light coat of MIL–PRF–6081, grade 1010, lubricating oil, to the bar threads and new preformed packings (9 and 10).

(3) Install MS29513–116 and –113 preformed packings on bar (7); then, insert bar in the case (11).

(4) Install element support spring (12), element support plate (13), and support washer (14) on bar.

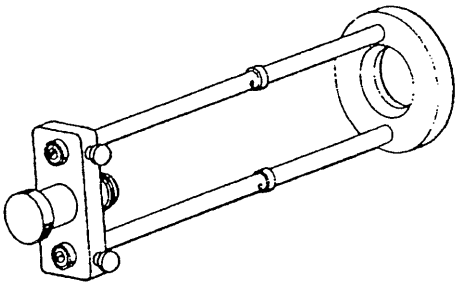

Figure 3. 6796975, Low Pressure Fuel Filter Element Support Spring Depressor

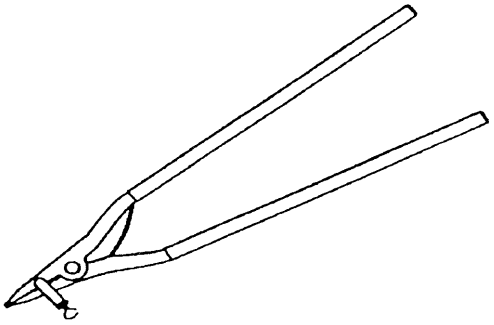

Figure 4. 6796974, Low Pressure Fuel Filter Retaining Ring Removal and Installation Pliers

(5) Install 6796975 spring depressor (figure 3) on bar and tighten hand knob until element support spring is depressed sufficiently to allow installation of retaining ring (15, figure 2).

(6) Install retaining ring in the groove on the bar, using 6796974 pliers (figure 4).

b. Install one element (3, figure 2), element support plate (4), and second element (3) on bar (7).

Lubricating Oil, MIL–PRF–6081, (Grade 1010) **7**

c. Apply a light coat of MIL–PRF–6081, grade 1010, lubricating oil to preformed packing and mating diameters and install MS29513–246 preformed packing (2) in head (1).

NOTE

Assemble case to head so that lockwire will prevent case from turning counterclockwise (viewed toward head).

d. Install case to head and lockwire. (QA)

e. Secure case and bar assembly (20) to head (1) by turning bar (7). Tighten bar to 220–225 lb in. (QA)

f. Install MS29512–6 preformed packing (6) on drain plug (5) and install plug in bar (7). Torque to 80–120 lb in. (QA) Lockwire plug and bar to case. (QA)

7. **INSTALLATION.**

NOTE

When new filter elements are required, reinstall attaching parts in accordance with figure 1.

a. Place fuel filter assembly in position on right side of engine. (See figure 1.)

NOTE

Assemble strut clamp on filter side of bracket. Tighten bolts evenly to prevent stress in clamp or bracket.

b. Secure brackets (43) to engine air inlet housing and strut clamp. Torque to 70–85 lb in. (QA)

c. Tighten clamp nuts (40 and 42). Torque to 70–85 lb in. (QA)

d. Install outlet and inlet–to–pressure switch tubes (52 and 53). Torque to 40–65 lb in. (QA)

e. Install fuel pump boost outlet–to–No. 1 filter hose (51). Torque to 200–350 lb in. (QA)

f. Install No. 1 filter outlet–to–bypass port hose (50). Torque to 200–350 lb in. (QA)

g. Install No. 1 filter inlet–to–No. 2 filter inlet hose (49).

h. Install No. 2 filter outlet–to–No. 1 filter outlet hose (48). Torque to 200–350 lb in. (QA)

INTERMEDIATE MAINTENANCE

MAINTENANCE

FUEL FILTER DIFFERENTIAL PRESSURE INDICATOR

Reference Material

External Tubing, Cabling, and Clamping Supplement Manual . . . . . NAVAIR 02B–5DG–6–1–1

Alphabetical Index

Subject Page No.

Cleaning 2

Inspection 2

Installation 2

Removal 2

Repair 2

Record of Applicable Technical Directives

None

1. **REMOVAL**.

a. Remove lockwire and disconnect electrical connector.

b. Disconnect inlet (8, figure 1) and outlet (7) tubes.

c. Remove fittings (4 and 5) from indicator (1) for installation in replacement unit. Remove and discard O–rings (6) from fittings.

d. Remove lockwire and remove screws (2) which secure indicator to bracket.

2. **CLEANING**.

Materials Required

Specification No./Part No.	Nomenclature
MIL-PRF-680, Type II	Solvent, cleaning

Dry Cleaning Solvent MIL–PRF–680, Type II **3**

a. Clean exterior of differential pressure indicator with MIL–PRF–680, Type II, cleaning solvent.

3. **INSPECTION**.

Support Equipment Required

Part No./Type Designation	Nomenclature
AN/USM–311	Multimeter (20,000 ohms per volt)

a. Inspect housing for damage and cracks. Also inspect threads for damage.

b. Test differential pressure indicator as follows:

(1) Apply 10 psi pressure to inlet (H) of indicator.

(2) Connect a multimeter to pins A and B.

(3) When differential pressure reaches 7.5 ± 0.75 psi the indicator button moves up, closes circuit between pins A and B, and becomes visible through window.

(4) After differential pressure is removed or lowered sufficiently, reset indicator by depressing reset button.

4. **REPAIR**.

a. None. Replace indicator if not serviceable.

5. **INSTALLATION**.

Support Equipment Required

Part No./Type Designation	Nomenclature
–––	Wrench, torque (0–150 lb in.)

Materials Required

Specification No./Part No.	Nomenclature
MIL–PRF–6081, grade 1010	Oil, lubricating
MS20995C32	Lockwire, 0.032 inch
MS9020–4	Seal, O–ring (2)

a. Secure indicator (1, figure 1), with electrical connection up and pointing aft to fuel filter pressure switch bracket, with screws (2) and washers (3).

b. Tighten screws to 22–26 lb in. and lockwire. (QA)

Lubricating Oil, MIL–PRF–6081, (Grade 1010) **7**

c. Apply a light coat of MIL–PRF–6081, grade 1010, lubricating oil to fitting threads (4 and 5) and new preformed packing MS9020–4 (6).

d. Install one preformed packing (6) on one end of each fitting.

e. Install fittings (4 and 5), with preformed packing (6) toward indicator, into indicator ports. Torque to 55–80 lb in. (QA)

f. Connect the short tube (8) to the “high” (top) port (4) and the long tube (7) to the “low” (bottom) port (5). Tighten tube nuts. Torque tube nuts to 40–65 lb in. (QA)

g. Reconnect the electrical connector and lockwire. (QA)

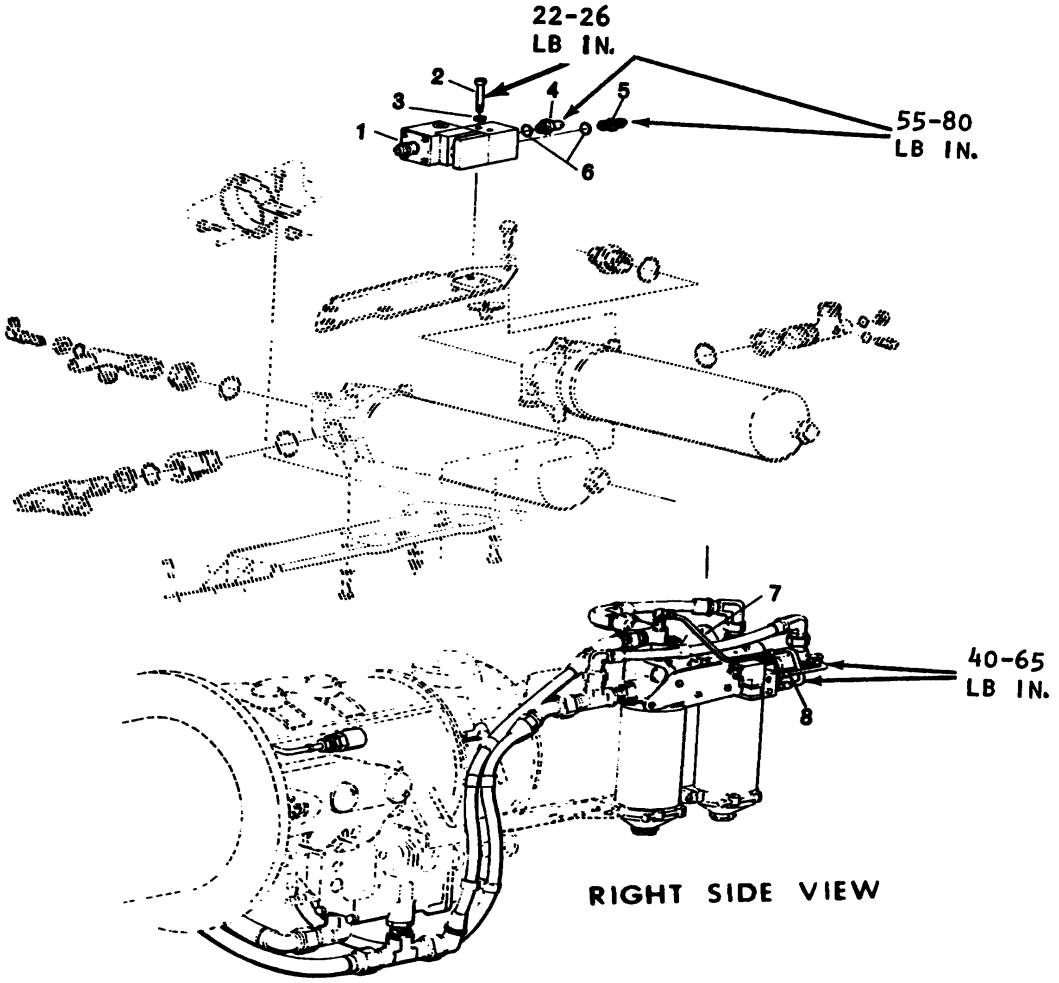

1. Differential Pressure Indicator
2. Screw (2)
3. Washer
4. Union
5. Union
6. Preformed Packing
7. Tube, Fuel Filter Outlet–to–Pressure Switch
8. Tube, Fuel Filter Inlet–to–Pressure Switch

Figure 1. Differential Pressure Indicator Details

INTERMEDIATE MAINTENANCE

MAINTENANCE

PRESSURE SWITCH

Reference Material

None

Alphabetical Index

Subject	Page No.
Cleaning	2
Inspection	2
Installation	2
Removal	2
Repair	2

Record of Applicable Technical Directives

None

1. **REMOVAL**.

a. Remove lockwire and disconnect electrical connection.

b. Remove lockwire and unscrew switch (1, figure 1) from filter assembly body (3). Remove and discard preformed packing (2) from switch.

2. **CLEANING**.

Materials Required

Specification No./Part No.	Nomenclature
MIL–PRF–680, Type II	Solvent, cleaning

Dry Cleaning Solvent MIL–PRF–680, Type II **3**

a. Clean exterior of pressure switch with MIL–PRF–680, Type II cleaning solvent.

3. **INSPECTION**.

Support Equipment Required

Part No./Type Designation	Nomenclature
ZA–43	Kit, fluorescent dye penetrant

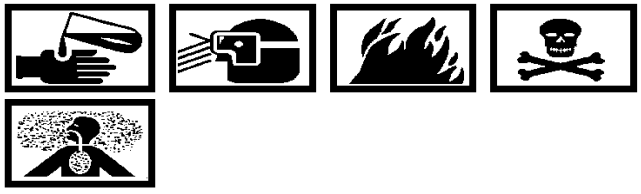

Fluorescent Dye Penetrant ZA–43 **17**

a. Inspect housing for cracks, using fluorescent dye penetrant kit (ZA–43).

4. **REPAIR**.

a. No repair permitted. Replace switch when housing is damaged or cracked.

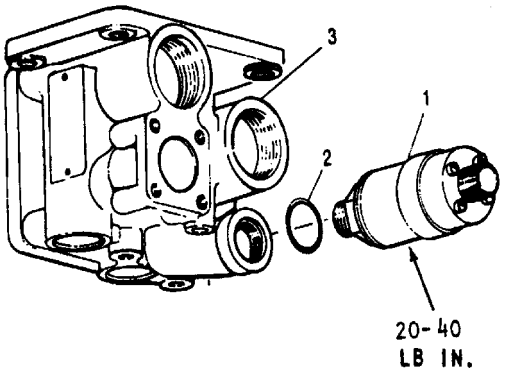

1. Pressure Switch
2. Preformed Packing
3. Fuel Filter Body

Figure 1. Pressure Switch Details

5. **INSTALLATION**.

Support Equipment Required

Part No./Type Designation	Nomenclature
—	Wrench, torque (0–150 lb in.)

Materials Required

Specification No./Part No.	Nomenclature
MIL–PRF–6081, grade 1010	Oil, lubricating
MS20995C32	Lockwire 0.032 inch
MS9020–06	Preformed Packing

Lubricating Oil, MIL–PRF–6081, (Grade 1010) **7**

a. Apply a light coat of MIL–PRF–6081, grade 1010, lubricating oil, to preformed packing (2, figure 1) and mating diameters. Install packing on switch (1).

b. Install switch in filter assembly body (3) tighten to 20–40 lb in. and lockwire. (QA)

c. Connect and lockwire electrical connection. (QA)

INTERMEDIATE MAINTENANCE

MAINTENANCE

FUEL CONTROL ASSEMBLY

Reference Material

Coordinator Control Assembly – Maintenance . . . . . WP 065 00
External Tubing, Cabling, and Clamping Supplement Manual . . . . . NAVAIR 02B–5DG–6–1–1

Alphabetical Index

Subject Page No.
Cleaning 3
Coordinator Control to Fuel Control Rigging 7
Fuel Control Assembly Low Speed Ground Idle (LSGI) Adjustment 10
Adjustment 10
Assembly 10
Disassembly 10
Fuel Control Shutoff Valve Solenoid Assembly 9
Installation 9
Removal 9
Inspection 5
Installation 6
Removal 2
Repair 5

Record of Applicable Technical Directives

None

1. **REMOVAL.**

Support Equipment Required

Part No./Type Designation	Nomenclature
6796698	Fixture, fuel control holding

a. Refer to NAVAIR 02B–5DG–6–1–1 for locations of external piping, cabling and clamping.

b. Place a suitable container under fuel control, to catch any fuel, when disconnecting fuel lines.

c. Disconnect fuel hoses at trim valve bypass and inlet ports, on bottom of fuel control.

d. Disconnect hose at seal drain tee on fuel control.

e. Remove lockwire and disconnect electrical connector from fuel control trim valve.

f. Remove lockwire and disconnect electrical connector from fuel control low speed ground idle solenoid.

g. Remove lockwire and disconnect electrical connector from coordinator control.

h. Remove bolt, washer, nut and cable clamp from standoff bracket, on bottom of fuel control.

i. Remove lockwire and loosen nuts on fuel control throttle lever (10, figure 1). Remove fuel control throttle lever with throttle rod (11) connected, from fuel control.

j. Remove lockwire, bolt, washer and nut securing fuel cutoff lever (5) to fuel cutoff rod (8). Remove fuel cutoff rod.

k. Remove lockwire, nut and bolt from propeller setting lever (1). Remove propeller control rear link rod.

l. Disconnect fuel hose at fuel control outlet port.

m. Disconnect inlet air pressure sensing line at tee, on forward end of fuel control.

n. Remove lockwire and disconnect electrical connector from fuel control shutoff valve actuator.

o. Remove lockwire and disconnect electrical connector from compressor inlet temperature sensor.

p. Remove lockwire, nuts, washer, bolt, vertical and horizontal support brackets from coordinator control and compressor housing.

CAUTION

Do not attempt to disconnect capillary tube from compressor inlet temperature sensing probe or from fuel control. Damage to probe could result.

q. Remove lockwire, bolts (2, figure 2), compressor inlet temperature sensor (1) and gasket (3). Discard gasket.

r. Remove lockwire, bolts (4), washers (5), temperature sensing probe (6) and gasket (7). Discard gasket.

s. If anti–icing tube assembly (8) comes out with temperature sensing probe, remove tube assembly from probe. Remove and discard preformed packing (9) and gasket (10).

CAUTION

When removing fuel control, use extreme care to prevent damage to capillary tube.

t. Remove nuts (11) and washers (12).

u. Support fuel control (13) and loosen V–band clamp (14). Carefully remove fuel control.

v. Remove and discard preformed packings (15 and 16).

w. Place coordinator–fuel control assembly, with coordinator up, on 6796698 fuel control holding fixture (figure 3).

x. Remove all fittings, check valve and preformed packings (17 through 34) from fuel control. Discard preformed packings.

y. Remove coordinator control from fuel control. (Refer to WP 065 00.)

z. To prevent damage to the fuel control quadrant, install fuel control protective cover on unit to be shipped back to depot. Local manufacture of cover can be accomplished using figure 4.

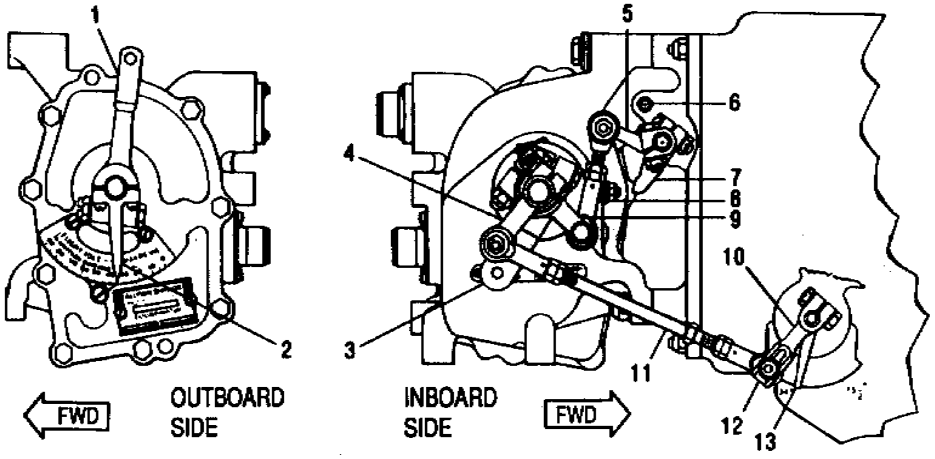

1. Propeller Setting Lever
2. Coordinator Pointer
3. Condition (Emergency) Lever
4. Throttle Output Lever
5. Fuel Cutoff Lever
6. Stop Pin
7. Stop Lever
8. Fuel Cutoff Rod
9. Fuel Cutoff Output Lever
10. Fuel Control Throttle Lever
11. Throttle Rod
12. Lever Adjusting Screw
13. Fuel Control Pointer

Figure 1. Coordinator to Fuel Control Linkage Installation

2. **CLEANING.**

Materials Required

Specification No./Part No.	Nomenclature
MIL-PRF-680, Type II	Solvent

a. Cap off all openings.

Dry Cleaning Solvent
MIL–PRF–680, Type II **3**

b. Clean exterior of fuel control with MIL–PRF–680, Type II solvent.

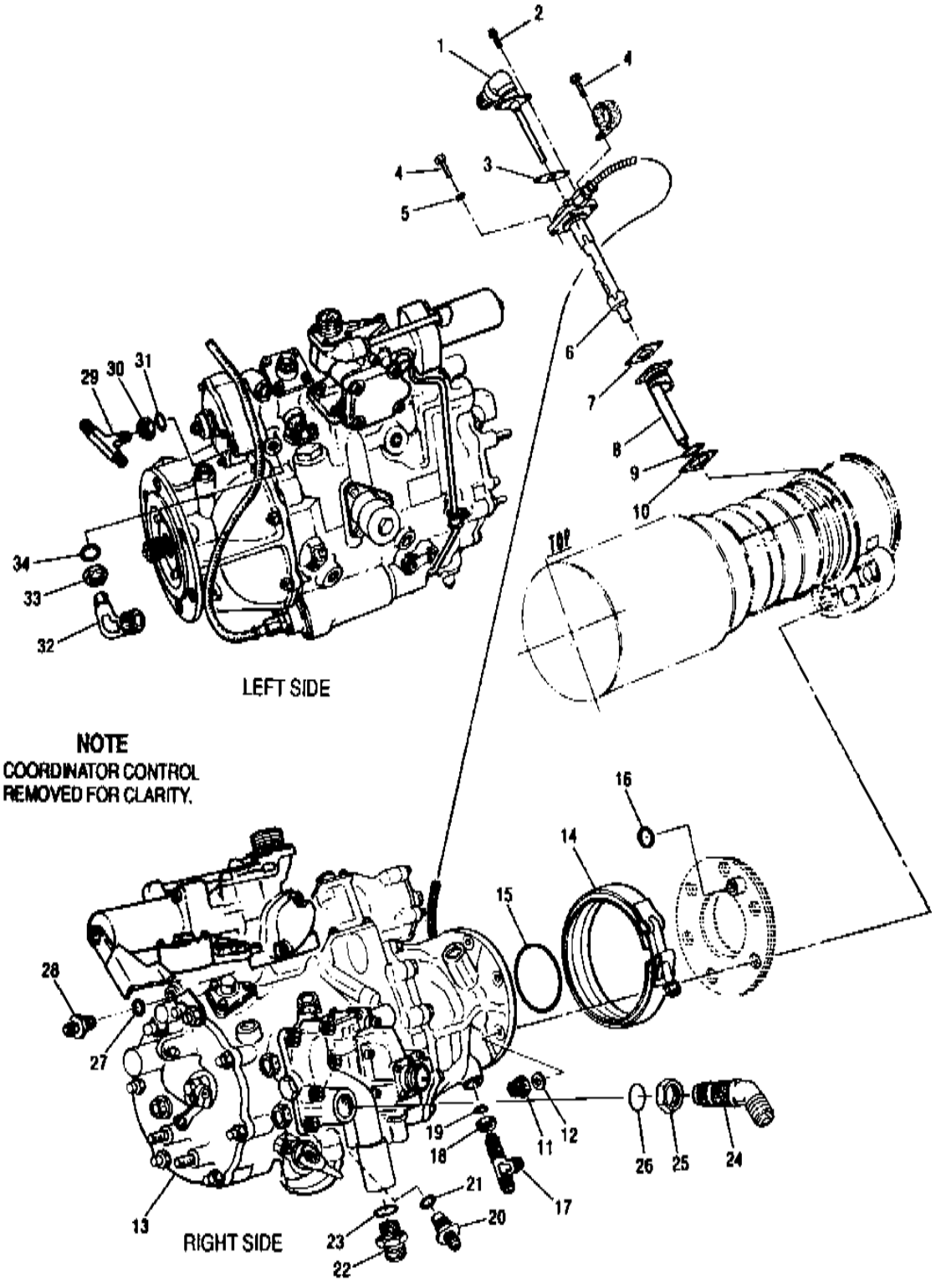

Figure 2. Fuel Control Details (Sheet 1 of 2)

1. Compressor Inlet Temperature Sensor
2. Bolt
3. Gasket
4. Bolt
5. Washer
6. Temperature Sensing Probe
7. Gasket
8. Anti–icing Tube Assembly
9. Preformed Packing
10. Gasket
11. Nut
12. Washer
13. Fuel Control
14. V–band Clamp
15. Preformed Packing
16. Preformed Packing
17. Tee
18. Nut
19. Preformed Packing
20. Check Valve
21. Preformed Packing
22. Nipple
23. Preformed Packing
24. Elbow
25. Nut
26. Preformed Packing
27. Preformed Packing
28. Reducer
29. Tee
30. Nut
31. Preformed Packing
32. Elbow
33. Nut
34. Preformed Packing

Figure 2. Fuel Control Details (Sheet 2 of 2)

3. **INSPECTION.**

a. Inspect for corrosion on aluminum and steel parts. Replace parts displaying etch type corrosion.

b. Inspect sealing surfaces of parts for nicks and other damage that prevents sealing.

c. Minor damage to nonfunctional areas is generally acceptable so long as part is not bent or distorted.

d. Inspect entries and exits for shape and plugged openings.

e. Inspect splines for damage and deformed teeth. Burnishing is a normal result of part operation. (Do not confuse this with wear or damage.)

f. Inspect threaded openings for crossed, stripped or damaged threads.

g. Check preformed packing sealing surfaces around threaded openings for damage.

h. Replace control or parts to correct the damage.

i. Inspect fuel control air sensing tip for cleanliness.

j. If dirty, use air pressure in reverse direction of normal flow through internal engine passage and sensing tip.

k. Inspect control for leakage.

4. **REPAIR.** No repair permitted. Replace control when housing is damaged.

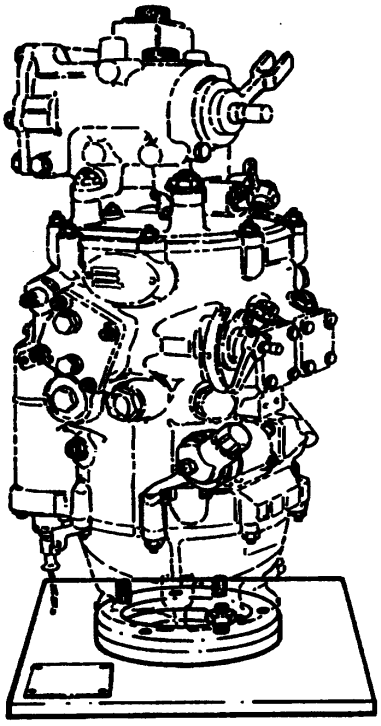

Figure 3. Fuel Control and Coordinator Mounted on 6796698 Fuel Control Holding Fixture

5. **INSTALLATION.**

Support Equipment Required

Part No./Type Designation	Nomenclature
6796698	Fixture, holding, fuel control
---	Wrench, torque (0–150 lb in.)
---	Wrench, torque (0–300 lb in.)
---	Wrench, torque (0–500 lb in.)
---	Wrench, torque (0–1000 lb in.)

Materials Required

Specification No./Part No.	Nomenclature
MIL–PRF–6081, Grade 1010	Oil, lubricating
MIL–PRF–23699	Oil, lubricating
MS20995C20	Lockwire, 0.020 inch
MS20995C32	Lockwire, 0.032 inch
AS3084–10	Packing, preformed (3)
AS3085–027	Packing, preformed
MS9020–04	Packing, preformed (3)
MS9020–08	Packing, preformed
23007388	Packing, preformed
6877242–002	Packing, preformed
23008249	Gasket
23031075	Gasket
6739831	Gasket

a. Refer to NAVAIR 02B–5DG–6–1–1 for locations of external piping, cabling and clamping.

b. Install replacement fuel control on 6796698 fuel control holding fixture.

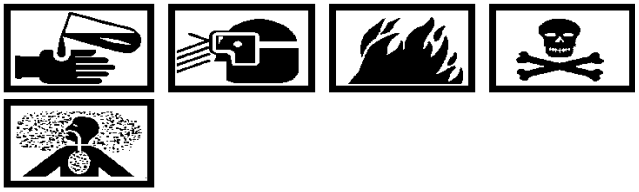

Lubricating Oil, MIL–PRF–6081, (Grade 1010) **7**

c. Install nipple (22, figure 2), elbow (24) and reducer (28) with AS3084–10 preformed packings (23, 26 and 27). Apply a thin coat of MIL–PRF–6081, Grade 1010 lubricating oil to preformed packings.

d. Install tees (17 and 29) and elbow (32) with MS9020–04 preformed packings (19, 31 and 34). Apply a thin coat of MIL–PRF–6081, Grade 1010 lubricating oil to preformed packings.

e. Install check valve (20) with MS9020–08 preformed packing (21). Apply a thin coat of MIL–PRF–6081, Grade 1010 lubricating oil to preformed packings.

f. Secure coordinator control to fuel control with washers and nuts. Torque bottom nuts to 140–170 lb in. Torque top, outboard nut to 74–89 lb in. (QA)

g. Preform coordinator control to fuel control rigging procedure per paragraph 6.

Lubricating Oil, MIL–PRF–23699 **2**

h. Install 23007388 preformed packing (16, figure 2) in adapter assembly lubrication port. Apply a thin coat of lubricating oil MIL–PRF–23699 to preformed packing.

i. Install 6877242–002 preformed packing (15) on fuel control flange. Apply a thin coat of lubricating oil MIL–PRF–23699 to preformed packing.

j. Lubricate fuel control shaft with lubricating oil MIL–PRF–23699.

k. Install fuel control on mounting studs. Install nuts (11) and washers (12), 180° apart, to secure fuel control to adapter assembly. Torque nuts to 160–195 lb in. (QA).

l. Install V–band clamp (14) . Torque clamp nut to 75–85 lb in. Tap clamp lightly with a plastic mallet while torqueing nut to ensure clamp seals properly (QA).

m. Install vertical and horizontal supports on coordinator control and compressor housing with bolt, washer and nuts. Torque bolt to 140–170 lb in. and nuts to 74–89 lb in. (QA).

n. Connect electrical connector to coordinator control. Tighten finger tight until seated plus 20° max angle of turn. Lockwire (0.020 inch) (QA).

o. Secure coordinator control cable clamps to fuel control standoff brackets with bolts and nuts. Torque nuts to 37–42 lb in. (QA).

p. Connect high pressure bypass port hose to trim valve bypass fitting. Torque to 200–350 lb in. (QA).

q. Connect high pressure fuel filter outlet hose to the valve inlet fitting. Torque to 475–575 lb in. (QA).

r. Connect drain line to tee fitting on bottom of fuel control. Torque to 80–120 lb in. (QA).

s. Connect the electrical connector to the low speed solenoid. Torque to 100–120 lb in. Lockwire (0.020 inch). (QA)

t. Connect electrical connector to fuel trim valve. Tighten hand tight until seated. Lockwire (0.020 inch) (QA).

u. Connect fuel hose from fuel flow limiter valve to outlet port of fuel control. Torque to 325–400 lb in. (QA).

v. Connect electrical connector to fuel control shutoff valve solenoid. Torque to 100 to 120 lb in. Lockwire (0.020 inch). (QA)

w. Connect inlet air pressure sensing line to fuel control tee. Torque to 80–120 lb in. (QA).

CAUTION

Ensure anti–icing tube assembly (8) is properly installed in the air inlet housing before installing air inlet temperature sensing probe (6).

Lubricating Oil, MIL–PRF–23699 2

x. If removed, install 23008249 gasket (10) and AS3085–027 preformed packing (9) on anti–icing tube assembly and install into air inlet housing assembly. Apply a thin coat of MIL–PRF–23699 lubricant to preformed packing.

y. Install 6739831 gasket (7) on air inlet temperature sensing probe (6) and install into anti–icing tube assembly. Install bolts (4) washers (5) and cable clamp. Torque bolts to 70–85 lb in. Lockwire (0.032 inch). (QA)

z. Install 23031075 gasket (3) on compressor inlet temperature sensor and install into air inlet temperature sensing probe. Install bolts (2). Torque to 35–40 lb in. Lockwire (0.032 inch). (QA)

aa. Connect propeller control rear link rod to propeller setting lever (1, figure 1). Install bolt (head inboard) and nut. Torque nut to 74–89 lb in. Lockwire (0.032 inch). (QA)

6. COORDINATOR CONTROL TO FUEL CONTROL RIGGING.

Support Equipment Required

Part No./Type Designation	Nomenclature
–––	Wrench, torque (0–100 lb in)

Materials Required

Specification No./Part No.	Nomenclature
MS20995C32	Lockwire, 0.032 inch

NOTE

Fuel control assembly is received with its fuel cutoff lever (5, figure 1), stop lever (7), stop pin (6) and fuel control pointer (13) already assembled, adjusted, and sealed.

a. Attach fuel cutoff rod (8) to fuel cutoff lever. Install bolt (bolt head towards coordinator), washer and nut. Torque nut to 37–42 lb in. Lockwire (0.032 inch). (QA)

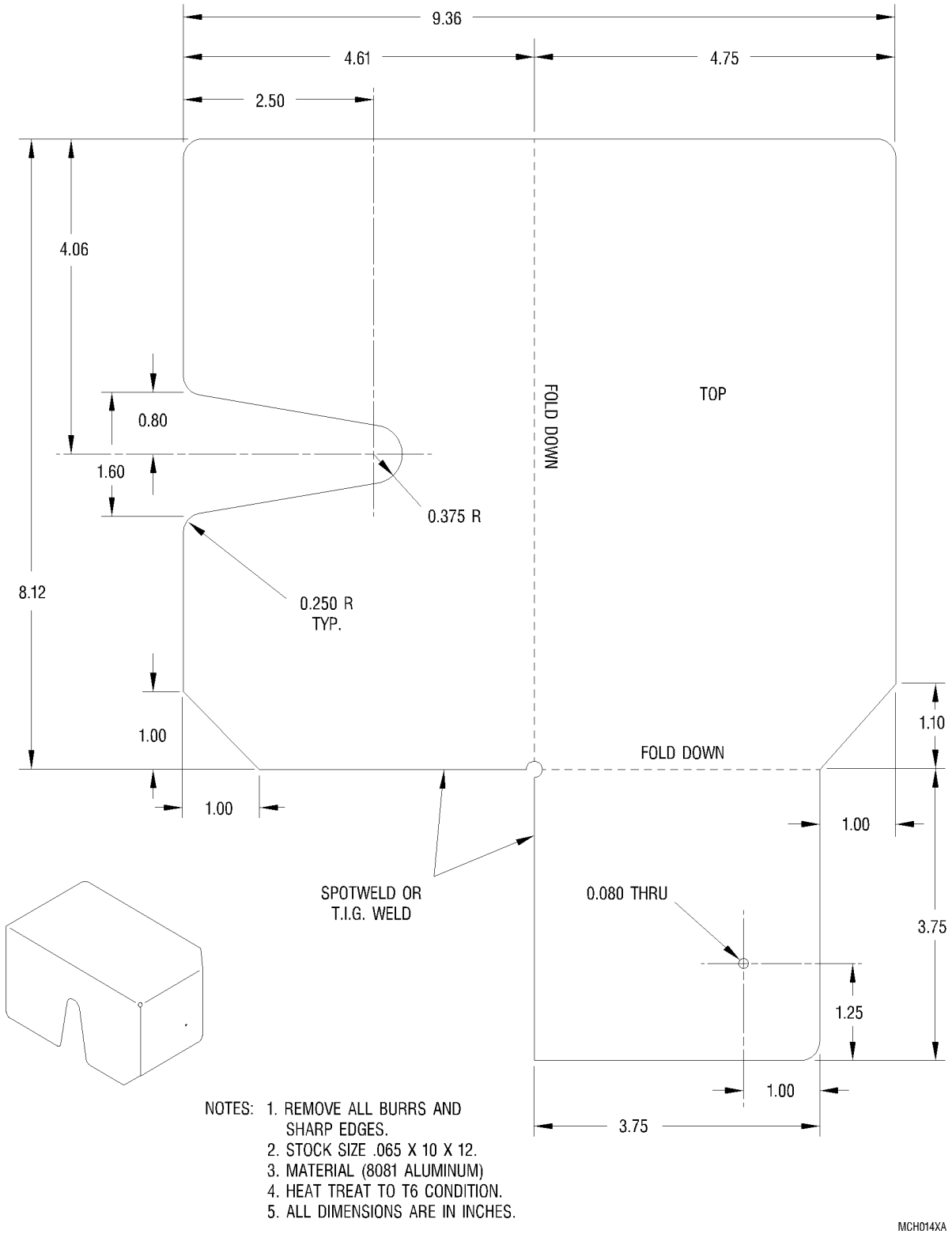

Figure 4. T56 Fuel Control Protective Cover

b. With coordinator pointer (2) at 0° and fuel control pointer (13) at 0°, install fuel control throttle lever (10). Fuel control throttle lever should be parallel with throttle output lever (4). Torque nut to 70–85 lb in. Lockwire (0.032 inch). (QA)

c. Rotate throttle output lever (4) so pointers (2 and 13) move between 0° and 90°.

NOTE

Pointer readings on coordinator control and fuel control must agree at all points within 1/2°. Travel of throttle output lever must be limited by minimum and maximum stops inside coordinator control, not fuel control's stops. One–half turn of lever adjusting screw (12) varies position of pointer by 1°.

d. If travel of pointer is too small, turn screw lever adjusting inward. Reverse if travel is too great.

NOTE

Removal of the micromatic bolt and fuel control throttle lever (10) is necessary to make this adjustment.

e. Adjustment of throttle rod only shifts the travel. Example: If fuel control pointer reads 1° at one end and 91° at the other, adjustment of this rod would shift this travel to be 0°–90°.

f. Remove coordinator and fuel control assembly from holding fixture and install assembly to engine per paragraph 5.

7. **FUEL CONTROL SHUTOFF VALVE SOLENOID ASSEMBLY.**

8. REMOVAL.

a. Remove lockwire, nut and bolt from propeller setting lever (1, figure 1). Remove propeller control rear link rod.

b. Remove lockwire and disconnect electrical connector from fuel control shutoff valve solenoid assembly (1, figure 4)

c. Disconnect fuel hose from outlet port on fuel control.

d. Remove lockwire, screw (2), washer (3), nuts (4) washers (5) and support bracket (6).

e. Remove lockwire and screws (7) and washers (8) from electrical connector support flange.

f. Remove lockwire and screws (9) from fuel control shutoff valve solenoid assembly mounting flange.

g. Remove fuel control shutoff valve solenoid assembly from fuel control shutoff valve by sliding aft and down and turning 45° degrees outboard to clear bleed air collector.

h. Remove and discard preformed packings (10, 11 and 12)

9. INSTALLATION.

Support Equipment Required

Part No./Type Designation	Nomenclature
---	Wrench, torque (0–50 lb in.)
---	Wrench, torque (0–150 lb in.)

Materials Required

Specification No./Part No.	Nomenclature
MIL–PRF–6081, Grade 1010	Oil, lubricating
379–S–24 (Bendix)	Packing, preformed
379–S–17 (Bendix)	Packing, preformed
379–S–15 (Bendix)	Packing, preformed
MS20995C20	Lockwire, 0.020 inch
MS20995C32	Lockwire, 0.032 inch

NOTE

Keyway on electrical connector must be inboard (towards compressor) when fuel control shutoff valve solenoid assembly (1, figure 5) is installed.

a. If necessary, remove lockwire and screws (13) from electrical connector. Turn electrical connector so keyway is facing inboard. Install screws and torque to 15–20 lb in. Lockwire (0.032 inch). (QA)

Lubricating Oil, MIL–PRF–6081, (Grade 1010) **7**

b. Install 379–S–24 preformed packing (12). Apply a thin coat of MIL–PRF–6081, Grade 1010 lubricating oil to preformed packing.

c. Install 379–S–17 preformed packing (11). Apply a thin coat of MIL–PRF–6081, Grade 1010 lubricating oil to preformed packing.

d. Install 379–S–15 preformed packing (10). Apply a thin coat of MIL–PRF–6081, Grade 1010 lubricating oil to preformed packing.

CAUTION

Take care not to damage large preformed packing (12) when installing fuel control shutoff valve solenoid assembly.

e. Install fuel control shutoff valve solenoid assembly into fuel control shutoff valve.

f. Install screws (7 and 9) and washers (8). Torque to 15–20 lb in. Lockwire (0.032 inch). (QA).

g. Install support bracket (6), screw (2), washer (3), nuts (4) and washers (5). Torque nuts to 50–60 lb in. and screw to 15–20 lb in. Lockwire (0.032 inch). (QA)

h. Connect electrical connector to fuel control shutoff valve solenoid assembly. Torque to 100–120 lb in. Lockwire (0.020 inch). (QA)

i. Connect fuel line to outlet port of fuel control. Torque nut to 325–400 lb in. (QA)

j. Connect propeller control link rod to propeller setting lever (1, figure 1). Install bolt (head inboard) and nut. Torque nut to 74–89 lb in. Lockwire (0.032 inch). (QA)

10. **FUEL CONTROL ASSEMBLY – LOW SPEED GROUND IDLE ADJUSTMENT (LSGI).**

11. DISASSEMBLY.

a. Remove lockwire from cap nut of the Governor Reset Assembly, located in the middle of Fuel Control Assembly, left hand side.

b. Unscrew cap nut and retain for re–installation.

12. ADJUSTMENT.

a. Connect the Handheld maintenance Terminal (HMT).

b. Start engine and operate at low speed ground idle for one minute.

c. Record low speed ground idle speed.

d. Shutdown engine.

WARNING

The engine will be very hot after shutdown. To prevent burns, allow enough time for cooling before performing maintenance.

NOTE

One click counterclockwise of the adjustment shaft will result in a decrease of .5% rpm. One click clockwise will result in an increase of .5% rpm.

e. Turn LSGI adjustment screw as required to adjust engine speed to correspond with 71.6% rpm (10,100–10,269 rpm).

f. Restart engine.

g. Record low speed ground idle speed.

h. Shutdown engine.

i. Repeat steps c through g above as necessary to set low speed ground idle at 70.9 to 72.1% as read on the HMT.

13. ASSEMBLY.

a. Install the cap nut and lockwire. (QA)

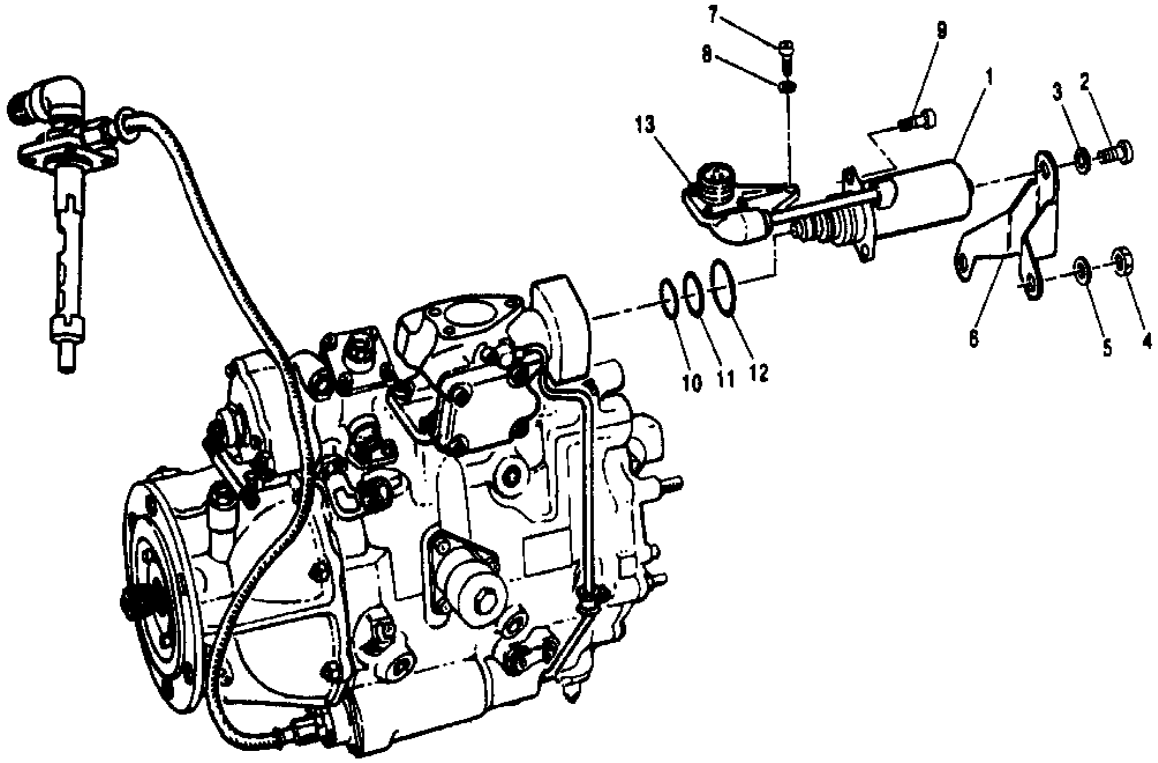

1. Fuel Control Shutoff Valve Solenoid Assembly
2. Screw
3. Washer
4. Nut
5. Washer
6. Support Bracket
7. Screw
8. Washer
9. Screw
10. Preformed Packing
11. Preformed Packing
12. Preformed Packing
13. Screw

Figure 5. Fuel Control Shutoff Valve Solenoid Assembly Details

INTERMEDIATE MAINTENANCE

MAINTENANCE

COORDINATOR CONTROL ASSEMBLY

Reference Material

External Tubing, Cabling, and Clamping Supplement Manual . . . . . NAVAIR 02B–5DG–6–1–1

Alphabetical Index

Subject	Page No.
Cleaning	2
Coordinator to Fuel Control Rigging	5
Inspection	2
Installation	2
Removal	2
Repair	2

Record of Applicable Technical Directives

None

1. **REMOVAL**.

a. Remove lockwire and disconnect electrical connector (2, figure 1)

b. Remove lockwire, self–locking nut (1, figure 2), and bolt (2) which secure propeller control rear link rod (3) to propeller setting lever (4).

c. Remove lockwire, self–locking nut (5), washers (6), and bolt (7) which secure fuel cutoff rod (8) to fuel cutoff output lever (9).

d. Remove lockwire, self–locking nut (10), and bolt (11) which secure throttle output lever (12) to coordinator control shaft. Remove throttle output lever with throttle rod (13) attached.

e. Remove bolt (14), washer (15) and nuts (16). Remove vertical support (17) and horizontal support (18) from coordinator control (19).

f. Remove cotter pin, nut, washers, and bolt which secure condition rod to condition lever (20).

g. Remove lockwire, self–locking nuts, (21 and 24) and washers (22 and 23) which secure coordinator control to fuel control. Remove coordinator control.

2. **CLEANING**.

Materials Required

Specification No./Part No.	Nomenclature
MIL–PRF–680, Type II.	Solvent, cleaning

Dry Cleaning Solvent
MIL–PRF–680, Type II **3**

a. Clean exterior of coordinator control and attaching hardware with MIL–PRF–680, Type II cleaning solvent.

3. **INSPECTION**.

a. Inspect coordinator control housing for damage.

b. Inspect electrical connector for damaged threads, bent pins, and corrosion.

c. Inspect control linkage rod ends. Refer to WP 069 00.

d. Inspect splines on coordinator and feather shafts for damage.

e. Maximum main shaft end play 0.012 inch. Maximum movement between main shaft and prop setting shaft 1.0 degrees.

4. **REPAIR**.

a. Replace the coordinator control when housing, electrical receptacles or shafts are damaged.

b. Replace coordinator control when corrosion cannot be removed.

c. Replace coordinator control for damaged splines.

5. **INSTALLATION**.

Support Equipment Required

Part No./Type Designation	Nomenclature
6796774	Fixture, fuel control cutoff rod setting
–––	Wrench, Torque (0–100 lb in.)
–––	Wrench, Torque (0–200 lb in.)

Materials Required

Specification No./Part No.	Nomenclature
MS20995C20	Lockwire, 0.020 inch
MS20995C32	Lockwire, 0.032 inch

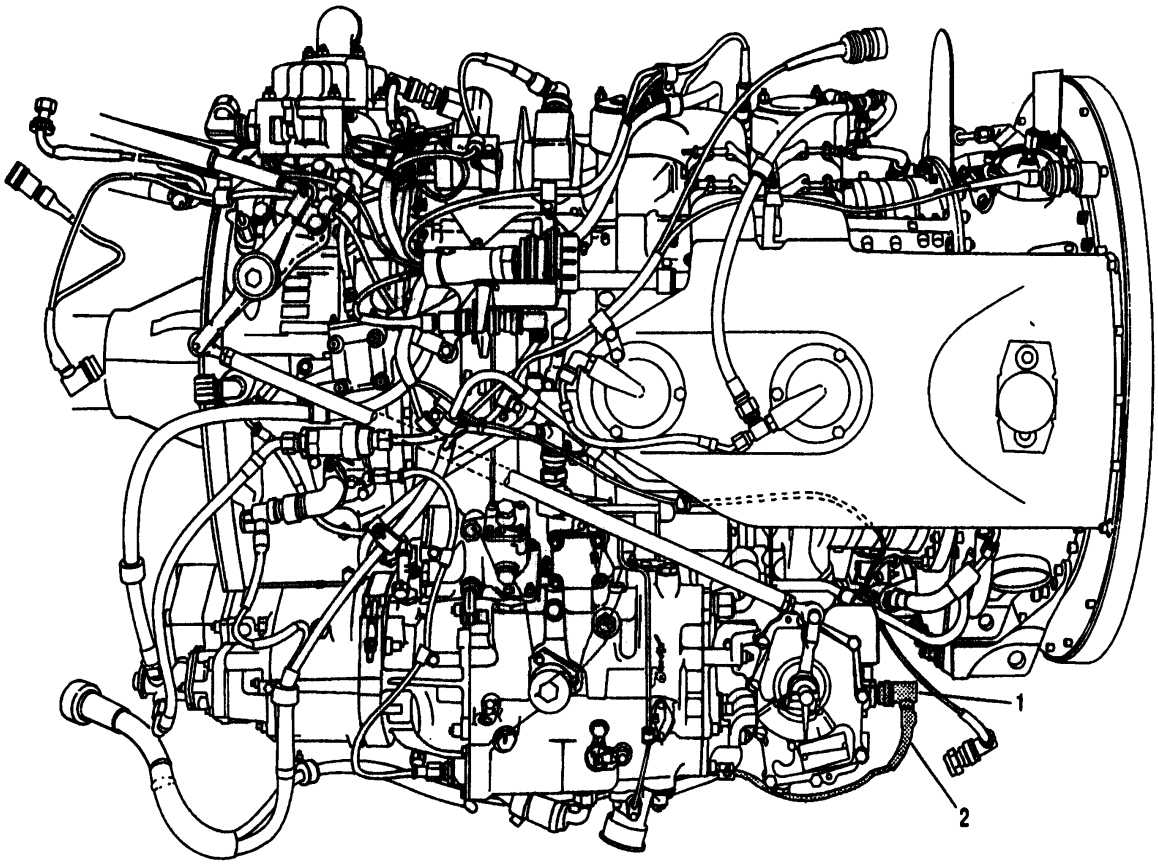

1. Coordinator Control Lead
2. Electrical Connector

Figure 1. Coordinator Control Wiring Harness Details

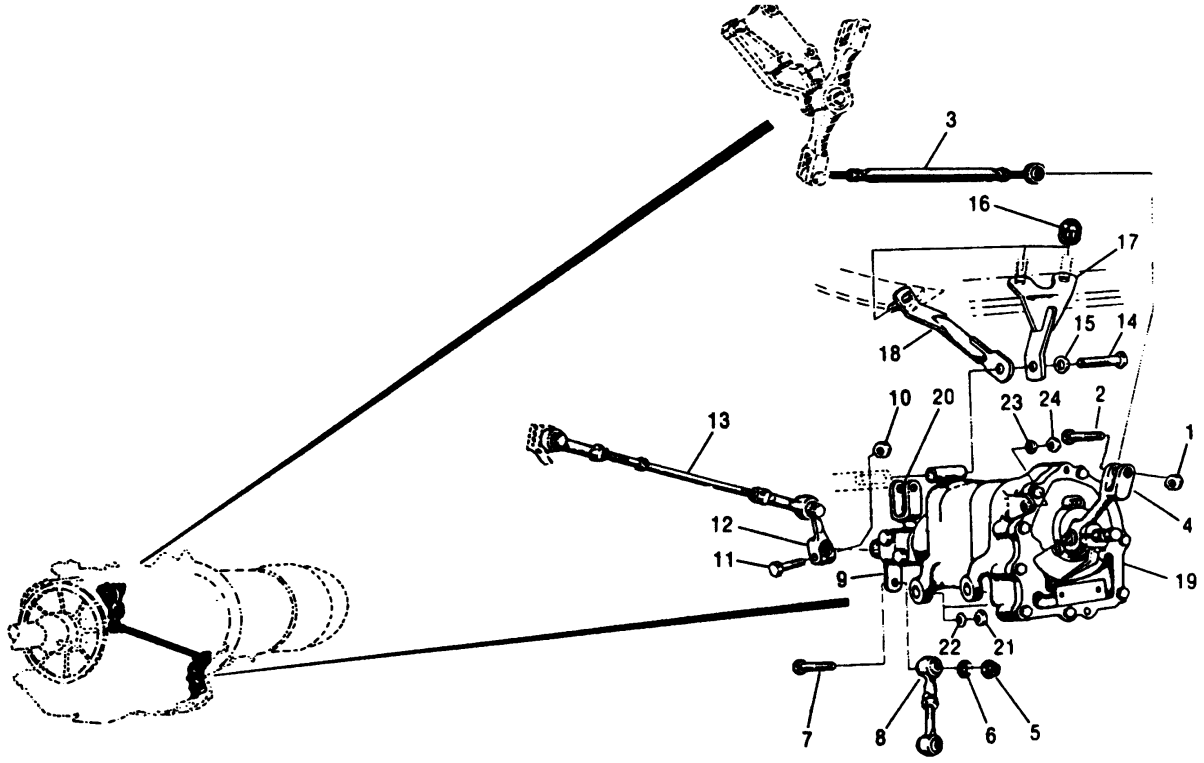

1. Nut, Self–locking
2. Bolt
3. Propeller Control Rear Link Rod
4. Propeller Setting Lever
5. Nut, Self–locking
6. Washer
7. Bolt
8. Fuel Cutoff Rod
9. Fuel Cutoff Output Lever
10. Nut, Self–locking
11. Bolt
12. Throttle Output Lever
13. Throttle Rod
14. Bolt
15. Washer
16. Nut, Self–locking
17. Vertical Support
18. Horizontal Support
19. Coordinator Lever
20. Condition Lever
21. Nut, Self–locking
22. Washer
23. Washer
24. Nut, Self–locking

Figure 2. Coordinator Control Details

a. Secure coordinator control to fuel control with washers (22 and 23, figure 2) and self–locking nuts (21 and 24). Torque nuts (21) to 140–170 lb in. and nut (24) to 74–89 lb in. (QA)

b. Install vertical and horizontal supports (17 and 18) on coordinator control and compressor casing with bolt (14), washer (15) and nuts (16). Torque bolt to 140–170 lb in. and nuts to 74–89 lb in. (QA)

c. Connect electrical connector (1, figure 1). Tighten fingertight until seated plug 20° max angle of turn. Lockwire (0.020 inch). (QA)

NOTE

If fuel cutoff rod (8, figure 2) and/or throttle rod (13) were replaced or length of rods changed proceed to paragraph 6.

d. Install throttle output lever (12), with throttle rod (13) on coordinator control shaft. Install throttle output lever with flat side out and blind splines aligned. Secure with bolt (11) and self–locking nut (10). Torque nut to 74–89 lb in. Lockwire (0.032 inch). (QA)

NOTE

Install fuel cutoff rod (8), washer (6), and self–locking nut (5) on coordinator control side of fuel cutoff output lever (9).

e. Attach fuel cutoff rod (8) to fuel cutoff output lever (9) on coordinator control, with bolt (7) washer (6) and self-locking nut (5) (nut and washer toward coordinator control). Torque nut to 37-42 lb in. Lockwire (0.032 inch). (QA)

6. **COORDINATOR TO FUEL CONTROL RIGGING**.

Support Equipment Required

Part No./Type Designation	Nomenclature
23055326	Fixture, fuel control linkage setting
6796774	Fixture, fuel cutoff rod setting
---	Wrench, torque (0-100 lb in.)

Materials Required

Specification No./Part No.	Nomenclature
MS20995C20	Lockwire, 0.020 inch
MS20995C32	Lockwire, 0.032 inch

NOTE

The coordinator control is received with the coordinator pointer, the propeller setting lever, the condition lever, and the fuel cutoff output lever already assembled, adjusted, and sealed.

a. Install throttle output lever (12, figure 2) on coordinator control shaft. (Install lever with flat side out and blind splines aligned.) Secure with bolt (11) and self-locking nut (10). Torque nut to 74-89 lb in. Lockwire (0.032 inch). (QA)

b. Rotate condition lever (3, figure 3) to UNFEATHER (clockwise facing inboard side of coordinator).

c. Move propeller setting lever (1) fully clockwise (facing outboard side of coordinator) against stop in coordinator. (Coordinator pointer (2) should read 90°; reposition pointer if necessary.) (QA)

d. Rotate fuel control throttle shaft through its full range of travel. (Fuel control pointer (13) shall indicate 0° and 90° at the extreme limits of travel.) (QA)

e. Adjust fuel cutoff rod (8, figure 2) to a length of 2.358 + 0.010 inch, using 6796774 fuel cutoff rod setting fixture (figure 4).

f. Attach fuel cutoff rod (8, figure 2) to fuel cutoff output lever (9) on coordinator control, with bolt (7) washer (6) and self-locking nut (5) (nut and washer toward coordinator control). Torque nut to 37-42 lb in. Lockwire (0.032 inch). (QA)

g. Rotate condition lever (3, figure 3) fully clockwise. Attach fuel cutoff rod (8) to fuel cutoff lever (5) with bolt, washer, and self-locking nut. Install bolt head toward coordinator. (QA)

h. Rotate condition lever (3) fully counterclockwise and check clearance between stop lever (7) and stop pin (6).

i. If clearance is not 0.010 to 0.110 inch, adjust fuel cutoff rod (8) as necessary to establish this clearance. Torque nut to 37-42 lb in. Lockwire (0.032 inch). (QA)

NOTE

Assembled throttle rod should have equal engagement of threads with rod ends. (Sight holes must remain blocked.)

j. Adjust throttle rod (11) to a length of 7.634 ± 0.002 inch, using 23055326 fuel control linkage setting fixture.

NOTE

To provide protractor clearance, assembly and disassembly of throttle rod to fuel control throttle lever must be made at 0° fuel control pointer position.

k. Attach throttle rod to throttle output lever (4) with bolt, washer, and self-locking nut. Install bolt with head inboard and washer under nut. Torque nut to 74-89 lb in. Lockwire (0.032 inch). (QA)

l. Position lever adjusting screw (12) for a fuel control throttle lever (10) length of 1.480 – 1.520 inches. (QA)

m. Position fuel control pointer (13) to 0°; then, attach throttle rod (11) to fuel control throttle lever (10). Install bolt with head toward fuel control, washer, rod-end, throttle lever, washers and self-locking nut.

n. Rotate propeller setting lever (1) to 90° position (against takeoff stop in coordinator).

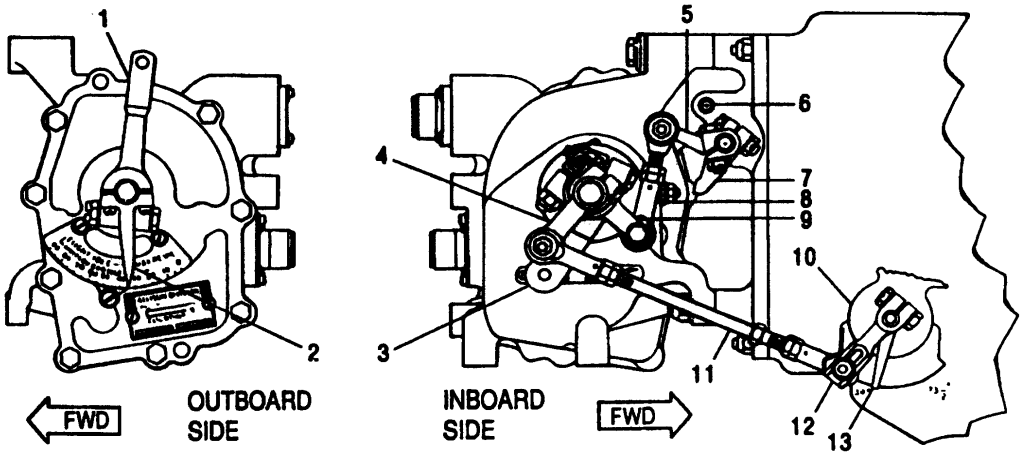

1. Propeller Setting Lever
2. Coordinator Pointer
3. Condition Lever
4. Throttle Output Lever
5. Fuel Cutoff Lever
6. Stop Pin
7. Stop Lever
8. Fuel Cutoff Rod
9. Fuel Cutoff Output Lever
10. Fuel Control Throttle Lever
11. Throttle Rod
12. Lever Adjusting Screw
13. Fuel Control Pointer

Figure 3. Coordinator to Fuel Control Linkage Installation

o. If necessary, adjust length of throttle rod (11) to position fuel control pointer (13) at 90° ± 1/2°. Throttle output lever (4) and fuel control throttle lever (10) should be approximately parallel.(QA)

NOTE

If fuel control pointer (13) travel is too small, turn lever adjusting screw (12) clockwise. If fuel control pointer (13) travel is too great, turn screw counter clockwise or lengthen rod. One half turn of screw varies pointer position approximately 1°.

p. Cycle propeller setting lever (1) through full range of travel. (Pointer readings on coordinator pointer (2) and fuel control pointer (13) must agree within 1° at all points. Travel of propeller setting lever must be limited by coordinator stops not fuel control.) (QA)

q. After final adjustments, tighten rod end jam nuts. Torque self–locking nut (securing throttle rod to fuel control throttle lever) to 74–89 lb in. (QA)

r. Cycle propeller setting lever (1) and condition lever (3) through their full range of travel and check for binding. (QA)

s. If binding occurs, loosen rod end jam nuts and rotate rod ends as necessary.

t. Lockwire (0.032 inch) self–locking nut and lockwire (0.020 inch) rod end jam nut. (QA)

u. Install propeller control rear link rod (3, figure 2) to propeller setting lever (4) with bolt (2) and self–locking nut (1). Install bolt with head inboard. Torque nut to 74–89 lb in. Lockwire (0.032 inch).

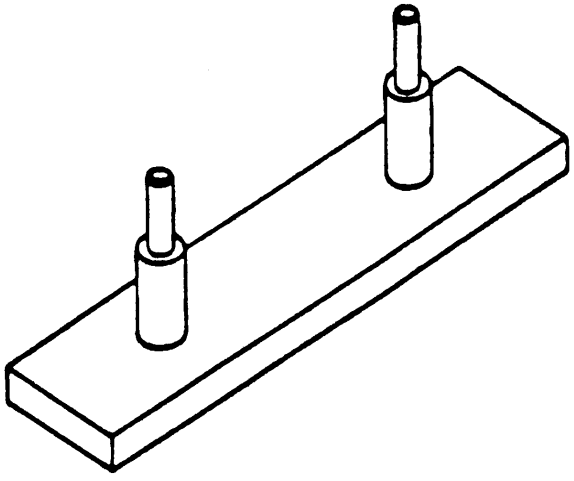

Figure 4. 6796774 Fuel Control Cutoff Rod Setting Fixture

INTERMEDIATE MAINTENANCE

MAINTENANCE

SOLENOID – MANIFOLD DRAIN VALVE ASSEMBLY

Reference Material

None

Alphabetical Index

Subject	Page No.
Cleaning	2
Inspection	2
Installation	2
Removal	2
Repair	2

Record of Applicable Technical Directives

None

1. **REMOVAL.**

a. Remove lockwire and disconnect electrical connector (1, figure 1) from valve (2).

b. Remove fuel lines from valve.

c. Remove bolts and washers (3).

d. Remove bracket (4) with valve.

e. Remove bolts (7, figure 2), washers (6), nuts (8) and valve (5) from bracket.

f. Remove nut (1), washer (2), solenoid (3), and preformed packing (4) from valve.

2. **CLEANING**.

Materials Required

Specification No./Part No.	Nomenclature
MIL–PRF–680, Type II	Solvent, cleaning

Dry Cleaning Solvent MIL–PRF–680, Type II **3**

a. Clean exterior of valve with MIL–PRF–680, Type II cleaning solvent.

3. **INSPECTION.**

a. Inspect housing for damage.

b. Inspect electrical receptacle for damaged threads, bent pins and corrosion.

4. **REPAIR**.

a. No repair permitted.

b. Replace valve when valve or electrical receptacle are damaged.

c. Replace valve when corrosion cannot be removed.

5. **INSTALLATION.**

Support Equipment Required

Part No./Type Designation	Nomenclature
–––	Wrench, torque (0–150 lb in.)

Materials Required

Specification No./Part No.	Nomenclature
MIL–PRF–6081, Grade 1010	Oil, lubricating
MS20995C32	Lockwire, 0.032 inch
99–0042–24	Preformed Packing

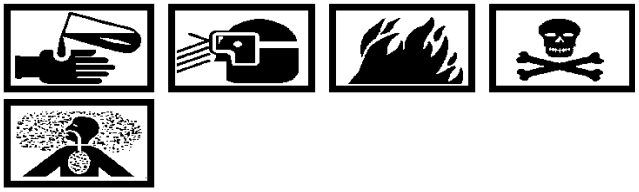

Lubricating Oil, MIL–PRF–6081, (Grade 1010) **7**

a. Apply a light coat of MIL–PRF–6081, grade 1010, oil to preformed packing (4, figure 2).

b. Install preformed packing on solenoid (3) and place on valve (5) base with washers (2) and nuts (1). Torque to 25–30 lb in. (QA)

c. Secure valve to bracket with bolts (7), washers (6) and nuts (8). Torque to 70–85 lbs in. (QA).

d. Secure valve and bracket to flowmeter bracket (5, figure 1) with bolts and washers (3). Torque to 74–89 lbs in.

e. Apply a light coat of MIL–PRF–6081, grade 1010, lubricating oil to the valve threads and install fuel lines. (See figure 1.) Torque to 80–120 lb in. (QA)

f. If angle of electrical connector on replacement valve will not permit connection to harness, loosen nut (1, figure 2), and reposition solenoid. Torque nut to 25–30 lb in. (QA)

g. Connect electrical connector to valve. Tighten fingertight until seated, plus 20° max. angle of turn and lockwire. (QA)

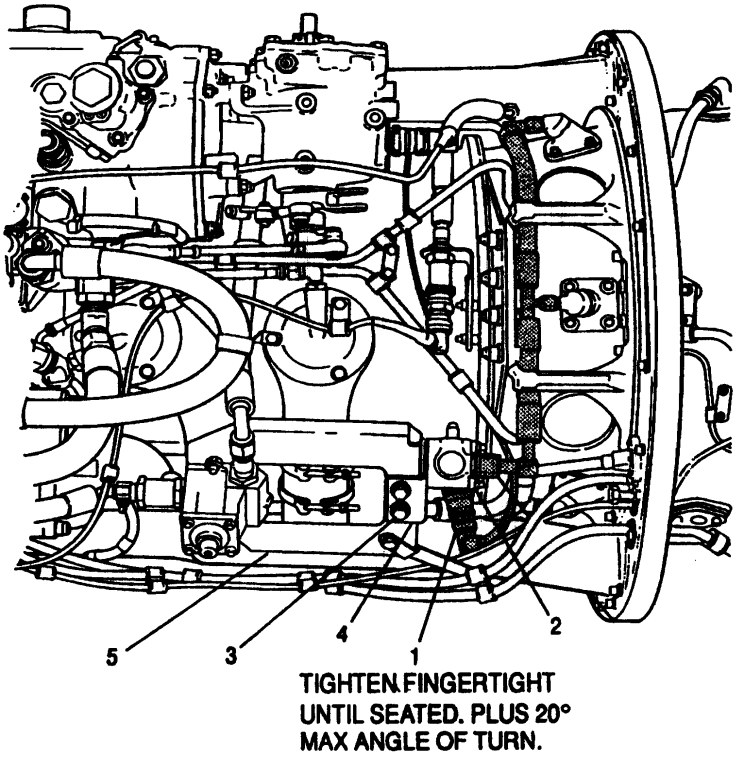

1. Electrical Connector
2. Solenoid-Manifold Drain Valve Assembly
3. Bolt and Washer
4. Bracket
5. Bracket

Figure 1. Solenoid-Manifold Drain Valve Assembly Locator

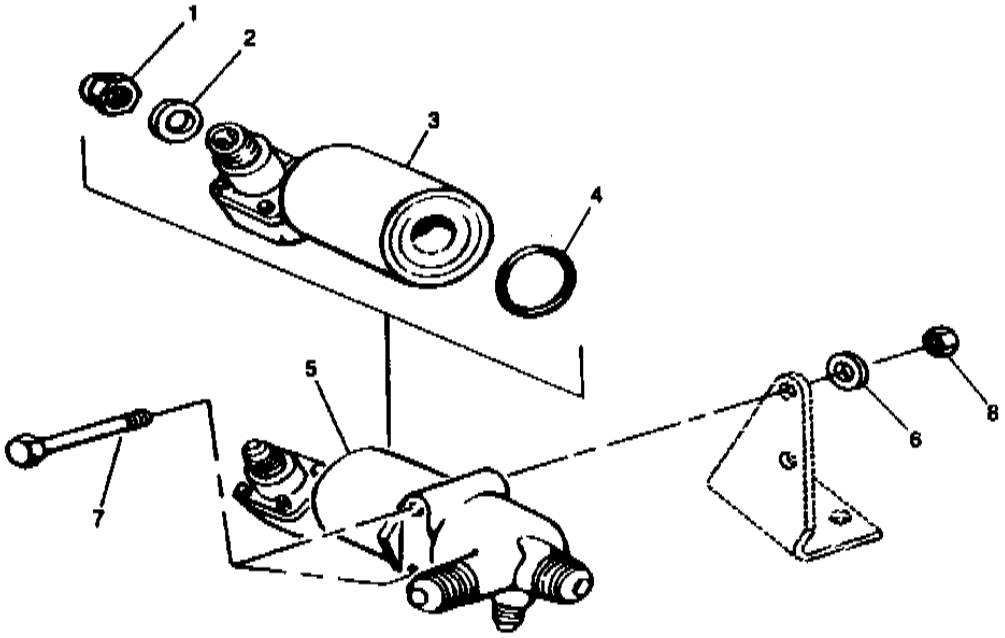

1. Nut
2. Washer
3. Solenoid
4. Packing, Preformed
5. Solenoid Manifold Drain Valve Assembly
6. Washer
7. Bolt
8. Nut

Figure 2. Solenoid Manifold Drain Valve Assembly Details

INTERMEDIATE MAINTENANCE

MAINTENANCE

FUEL NOZZLE ASSEMBLIES

Reference Material

Compressor Bleed Air Valve Assembly – Maintenance . . . . . WP 089 00
External Tubing, Cabling, and Clamping Supplement Manual . . . . . NAVAIR 02B–5DG–6–1–1

Alphabetical Index

Subject Page No.
Cleaning 2
Inspection 2
Installation 3
Removal 2
Repair 3

Record of Applicable Technical Directives

None

1. **REMOVAL**.

a. Disconnect air lines at bleed air valve. Refer to NAVAIR 02B–5DG–6–1–1.

b. Remove compressor seal vent tube assemblies.

c. Remove bleed air valves from bleed air collectors. Refer to WP 089 00.

d. Remove bolts, washers, and bushings from bleed air collector flange. Note size and locations of bolts, washers and bushing when removing.

e. Loosen coupling clamps and remove bleed air collectors. Cover opening to prevent entry of foreign objects.

f. Disconnect fuel manifold from fuel nozzles (2, figure 1).

g. Remove lockwire and remove bolts (1) which secure fuel nozzles (2) to engine diffuser.

CAUTION

Use extreme care during removal of fuel nozzles to prevent damage to fuel nozzles orifice.

Fuel nozzles can be a direct cause of vane erosion, distortion, cracking and melting. If vanes exhibit such defects, all fuel nozzles (set of six) should be replaced.

h. Remove fuel nozzles (2) and gaskets (3). Discard gaskets.

2. **CLEANING**.

CAUTION

Cleaning of fuel nozzles is not authorized. Remove fuel nozzles in sets of six and return to depot for cleaning.

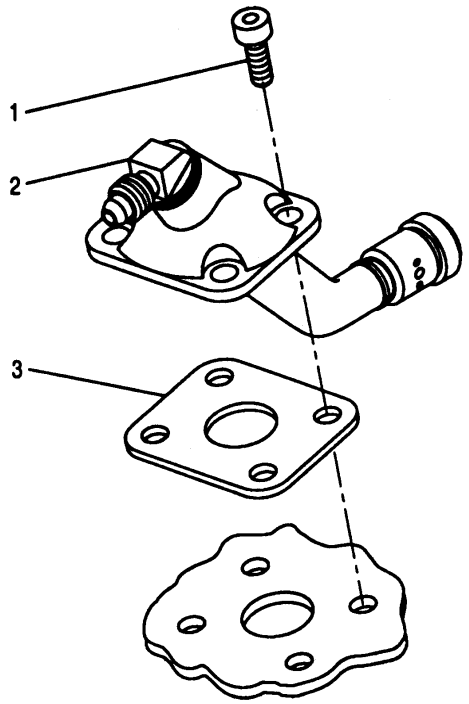

1. Bolt 2. Fuel Nozzle 3. Gasket

Figure 1. Fuel Nozzle Details

3. **INSPECTION**.

a. Inspect fuel nozzle spray tip for carbon deposits.

b. Wear or a polished appearance is permissible on air shroud providing plating has not been worn through.

CAUTION

Disassembly of fuel nozzles is not authorized.

c. Inspect fuel nozzle air shroud for wear.

d. When operational difficulty is experienced and fuel contamination is suspected, remove and replace all fuel nozzles. If excessive contamination is evident, replace all fuel nozzles.

4. **REPAIR**.

a. No repair authorized. Return to depot.

5. **INSTALLATION**.

Support Equipment Required

Part No./Type Designation	Nomenclature
–––	Wrench, torque (0–150 lb in.)

Materials Required

Specification No./Part No.	Nomenclature
6739373	Gasket
NS165	Compound, Anti–seize (Never Seez)
MS20995C32	Lockwire, 0.032 inch

CAUTION

Use extreme care during installation of fuel nozzles to prevent damage to fuel nozzles orifice.

a. Install new gaskets (3, figure 1) on fuel nozzles (2) and install fuel nozzles in engine diffuser.

Anti–seize Compound (Never Seez) NS165 32

b. Apply a thin coat of NS165 to bolts (1). Secure fuel nozzles to engine with bolts. Torque bolts to 70–85 lb in. Lockwire bolts in pairs. (QA)

c. Connect fuel manifold to fuel nozzles. Torque to 80–120 lb in. (QA).

d. Install bleed air collectors. Install bolts, washers and bushings in flange of bleed air collectors, at locations noted in removal. Torque to 70–85 lb in. (QA)

e. Position coupling clamps to bleed air collectors. Torque nuts to 8–10 lb in. above drag torque. (QA)

f. Install seal vent tube assemblies.

g. Install bleed air valves in bleed air collectors. Refer to WP 089 00.

h. Reconnect air lines at the bleed air valve. Refer to NAVAIR 02B–5DG–6–1–1.

INTERMEDIATE MAINTENANCE

MAINTENANCE

BURNER DRAIN VALVE ASSEMBLY

Reference Material

None

Alphabetical Index

Subject	Page No.
Cleaning	2
Inspection	3
Installation	3
Removal	2
Repair	3

Record of Applicable Technical Directives

None

1. **REMOVAL.**

Materials Required

Specification No./Part No.	Nomenclature
VV–P–216	Oil, penetrating

CAUTION

Removing bolts without using penetrating oil may cause bolts to snap off or threads to strip.

Penetrating Oil VV–P–216 55

a. Apply penetrating oil, VV–P–216 (A–A–50493), to both bolts (1, figure 1.). Allow penetrating oil to permeate bolt threads for a minimum of fifteen (15) minutes.

b. Remove lockwire, bolts (1), valve assembly (2), and gasket (4) from mounting flange (3). Discard gasket, two bolts, and lockwire.

2. **CLEANING.**

Materials Required

Specification No./Part No.	Nomenclature
MIL-PRF-680, Type II	Solvent, cleaning
MIL–B–23958, Type I	Brush, cleaning

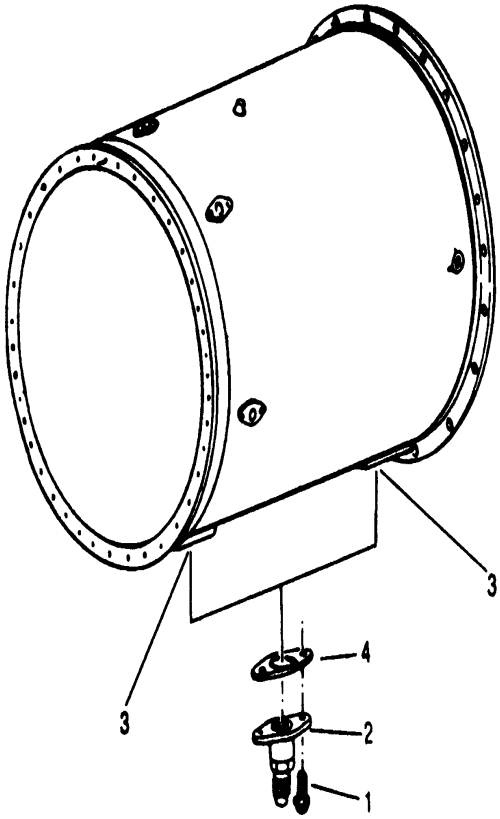

1. Bolt
2. Valve Assembly
3. Mounting Flange
4. Gasket

Figure 1. Burner Drain Valve Assembly

Dry Cleaning Solvent MIL–PRF–680, Type II 3

a. Clean corroded areas with MIL–PRF–680, Type II cleaning solvent using a wire brush.

3. **INSPECTION.**

a. Inspect valve assembly for thread damage.

b. Replace valve assembly if threads are damaged.

4. **REPAIR.** Replace valve assembly if found unserviceable.

5. **INSTALLATION.**

Support Equipment Required

Part No./Type Designation	Nomenclature
–––	Wrench, torque (0–150 lb in.)
–––	Wrench, torque (0–500 lb in.)

Materials Required

Specification No./Part No.	Nomenclature
NS–165	Compound, Anti–Seize
MS20995C32	Lockwire, 0.032 inch
MIL-PRF-680, Type II	Solvent, cleaning
23064887	Gasket, Burner Drain Valve
6871603–07	Bolt (2 per Burner Drain Valve)

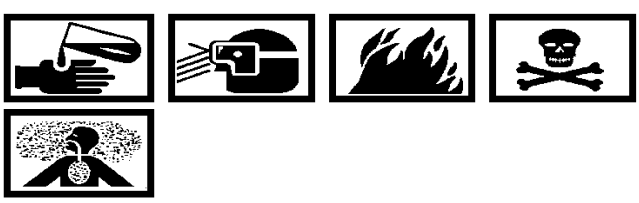

Anti–seize Compound (Never Seez) NS165 32

a. Apply NS–165 anti–seize compound to new bolts (1, figure 1) and valve assembly (2) threads.

Dry Cleaning Solvent MIL–PRF–680, Type II 3

b. Clean mounting flange (3) with MIL–PRF–680, Type II cleaning solvent.

c. Install new bolts into mounting flange (3). Tighten bolts by hand, then remove bolts, and re–apply NS–165 anti–seize to bolts.

d. Secure valve assembly (2) and new gasket (4) to mounting flange with bolts. Torque bolts to 70–85 lb in. and lockwire. (QA)

e. Connect drain line to valve assembly. Torque to 300–350 lb in. (QA)

INTERMEDIATE MAINTENANCE

MAINTENANCE

CONTROL LINKAGE ROD ENDS

Reference Material

None

Alphabetical Index

Subject	Page No.
Cleaning	2
Inspection	2
Repair	2

Record of Applicable Technical Directives

None

1. **CLEANING.**

Materials Required

Specification No./Part No.	Nomenclature
MIL–C–85043	Cloth, low–lint

CAUTION

Do not wash rod end bearing in cleaning solvent. Bearing may be damaged.

a. Fafnir Bearing Co. and Transport Dynamics Inc. rod end bearings are prelubricated and must not be washed in solvent.

b. Clean bearings by merely wiping with a clean cloth.

2. **INSPECTION.**

Support Equipment Required

Part No./Type Designation	Nomenclature
6796889	Fixture, checking, rod end internal clearance
–––	Scribe, bearing (0.030 in. dia ball)

a. Roll the ball on the rod end to check for free rotation.

CAUTION

Do not magnetic–particle inspect rod ends.

b. Inspect the bearing surface visually for pitting, flaking of plating, corrosion, or wear.

(1) Pitting: A pit is a small irregular cavity which can be felt with a 0.030 inch radius scribe. Pits on the ball are not cause for rejection unless single pits exceed 0.010 inch depth or 0.020 inch width or there are more than three pits in an area of 1/4 inch diameter.

(2) Flaking of plating. Flaking of plating sufficient to cause a loss of more than 10% of the area of contact on the surface of the ball is cause for rejection.

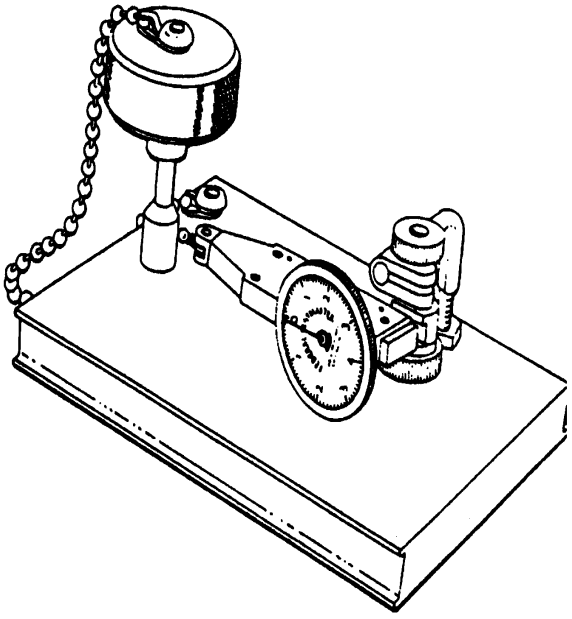

Figure 1. 6796889 Rod End Internal Clearance Checking Fixture

(3) Corrosion: Rust will be removed from all load carrying surfaces. Buff, polish, or clean chemically. In the advanced stages of pit corrosion, no correction is possible.

(4) Wear: Mount rod end in 6796889 internal clearance checking fixture. (See figure 1.)

(5) Check movement of rod end in a direction perpendicular to the axis of the bolt.

(6) Reject rod ends exceeding 0.005 inch movement.

CAUTION

Fafnir rod ends (ball bearing type) with bonded neoprene seals must not be relubricated. An attempt to lubricate may burst the seals. Wipe clean prior to assembly.

c. Fafnir rod ends, which incorporate a metallic retainer, is acceptable with the retainer damaged as long as the neoprene seal is not damaged in any way and the retainer is sealed around the OD.

3. **REPAIR.**

a. Replace rod end when inspection limits are exceeded.

INTERMEDIATE MAINTENANCE

MAINTENANCE

REDUCTION GEAR OIL PUMP ASSEMBLY

Reference Material

Reduction Gear Oil Filter Assembly–Maintenance . . . . . WP 071 00

Alphabetical Index

Subject	Page No.
Assembly	4
Cleaning	2
Disassembly	2
Inspection	2
Installation	5
Removal	2
Repair	4

Record of Applicable Technical Directives

None

1. **REMOVAL**.

a. Remove nuts (23, figure 1) and washers (24).

b. Remove pump assembly (6) from reduction gear.

c. Remove and discard preformed packings (17).

2. **DISASSEMBLY**.

Support Equipment Required

Part No./Type Designation	Nomenclature
6798131	Wrench, spanner, reduction gear oil pump threaded bushing

a. Remove nuts (21), washers (20) and filter assembly (12) for installation in replacement pump.

b. Remove preformed packings (18 and 19). Refer to WP 071 00 for filter servicing.

c. Remove internal retaining ring (22) from pump body.

d. Remove check valve.

(1) Remove check valve guide (14), check valve guide spring (13), check valve stem (25), check valve (26), preformed packing (27), and check valve seat (28).

WARNING

Remove carefully, spring (4) under extreme compression.

e. Remove internal retaining ring (1) from pump body. (6).

f. Remove bypass valve spring seat (2) spring (4) and piston (5).

g. Remove and discard preformed packing (3) from bypass valve spring seat.

CAUTION

If the reduction gear unit has a history of steadily increasing oil pressure, remove the pressure adjusting valve assembly without disturbing the adjustment. Do not loosen nut (11) as it retains the pressure adjusting valve lock in place.

h. Remove lockwire securing nut (11) on pressure adjusting valve assembly (15).

i. Use 6798131 spanner wrench (figure 2) and remove pressure adjusting valve assembly from pump cover (7, figure 1).

j. Remove and discard preformed packing (16) from pressure adjusting valve shaft (8).

3. **CLEANING**.

Materials Required

Specification No./Part No.	Nomenclature
MIL–PRF–680, Type II	Solvent, dry cleaning

Dry Cleaning Solvent
MIL–PRF–680, Type II **3**

a. Clean all parts of reduction gear oil pump with MIL–PRF–680, Type II dry cleaning solvent.

4. **INSPECTION**.

a. Inspect condition of check valve retainer seat and bypass valve seat in the pump body (6).

b. Inspect bypass valve piston (5) seating surfaces for corrosion pitting or damages that could cause leakage.

c. Inspect condition of bypass valve piston seat in pump body.

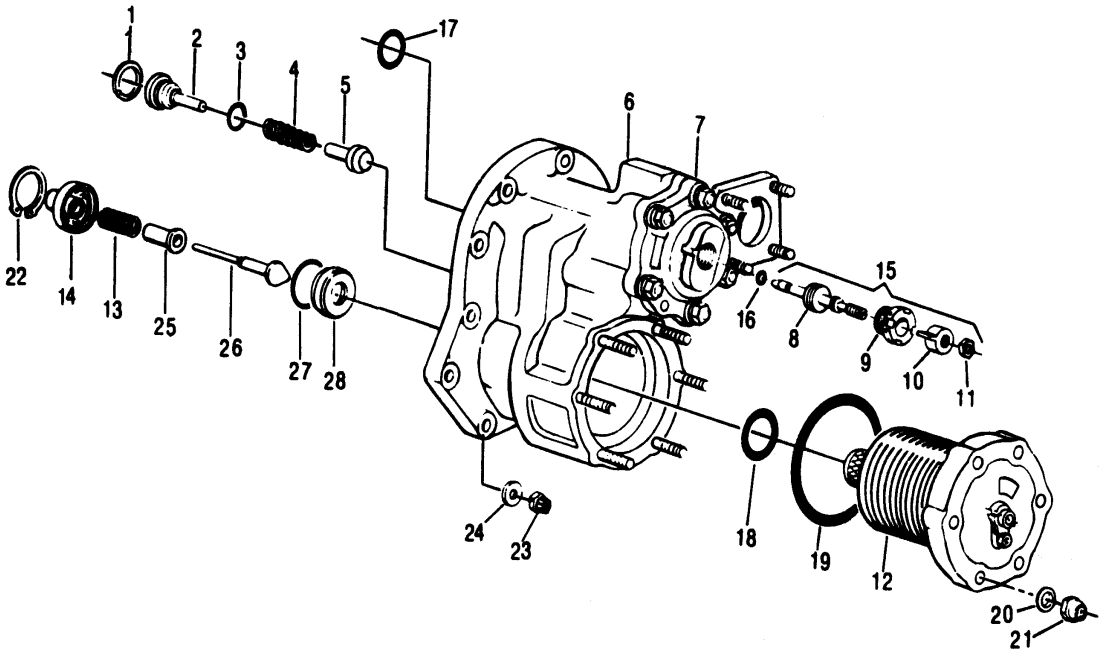

1. Internal Retaining Ring
2. Bypass Valve Spring Seat
3. Preformed Packing
4. Bypass Valve Spring
5. Bypass Valve Piston
6. Pump Body
7. Pump Cover
8. Pressure Adjusting Valve Seat
9. Threaded Bushing
10. Pressure Adjusting Valve Lock
11. Nut
12. Filter Assembly
13. Check Valve Guide Spring
14. Check Valve Guide
15. Pressure Adjusting Valve Assembly
16. Preformed Packing
17. Preformed Packing
18. Preformed Packing
19. Preformed Packing
20. Washer
21. Nut
22. Internal Retaining Ring
23. Nut
24. Washer
25. Check Valve Stem
26. Check Valve
27. Preformed Packing
28. Check Valve Seat

Figure 1. Reduction Gear Oil Pump Details

d. Inspect pressure adjusting valve shaft (8) threads and seating surfaces for wear, corrosion, pitting or other damage.

e. Inspect pump cover (7) threads and seating surfaces for wear, corrosion, pitting or other damage.

f. Inspect for clogged or restricted bleed hole in pressure adjusting valve shaft.

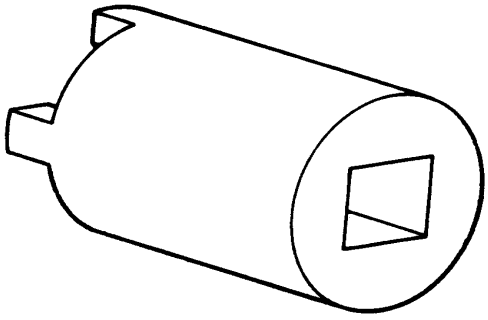

Figure 2. 6798131 Reduction Gear Oil Pump Threaded Bushing Spanner Wrench

5. **REPAIR**.

CAUTION

Do not replace pump cover. If trouble is experienced with cover, replace pump.

a. Replace pump if check valve retainer seat in pump body is unserviceable.

b. Replace bypass valve piston (5) if found unserviceable.

c. Replace pump if bypass valve seat in pump body is unserviceable.

d. Replace pump if pressure adjusting valve shaft threads and seating surfaces are unserviceable.

6. **ASSEMBLY**.

Support Equipment Required

Part No./Type Designation	Nomenclature
2308	T–Handle
6798131	Wrench, spanner, reduction gear oil pump threaded bushing
–––	Wrench, torque (0–500 lb in.)

Materials Required

Specification No./Part No.	Nomenclature
AS3085–006	Packing, preformed
AS3085–113	Packing, preformed
AS3085–231	Packing, preformed
MIL–PRF–23699	Oil, lubricating
MS20995C32	Lockwire, 0.032 inch

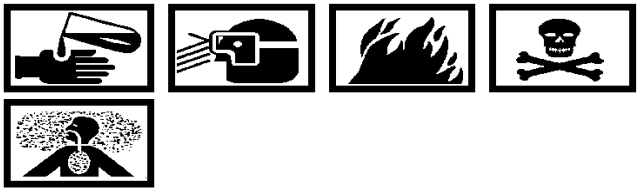

Lubricating Oil, MIL–PRF–23699 2

a. Coat all check valve parts with MIL–PRF–23699, lubricating oil.

b. Install check valve.

(1) Install check valve seat (28), preformed packing (27), check valve (26), check valve stem (25), check valve guide spring (13), check valve guide (14), and internal retaining ring (22) into pump body (6).

c. Coat all bypass valve parts with MIL–PRF–23699, lubricating oil.

d. Install bypass valve piston (5) bypass valve spring (4), preformed packing (3), bypass valve spring seat (2) using 2308 T–handle and internal retaining ring (1) into pump body.

e. To install the pressure adjusting valve assembly (15) without disturbing the adjustment, proceed as follows:

(1) Install a new preformed packing (16) on pressure adjusting valve shaft (8). Coat preformed packing and shaft with MIL–PRF–23699 lubricating oil.

(2) Install valve assembly in pump cover (7). Using 6798131, spanner wrench (figure 2) torque bushing to 300–500 lb in. (QA)

(3) Lockwire nut (11) and bushing (9) to pump cover. (QA)

CAUTION

The following procedure is not permitted on reduction gear units which have a history of above normal oil pressure.

f. To install a new pressure adjusting valve (15) assembly, proceed as follows:

Lubricating Oil, MIL–PRF–23699 2

(1) Install preformed packing (16) on pressure adjusting valve shaft (8). Coat preformed packing and shaft with MIL–PRF–23699 lubricating oil.

CAUTION

To prevent damage to pressure adjusting valve shaft when installing threaded bushing (9), turn shaft until it “bottoms” in bushing.

Lubricating Oil, MIL–PRF–23699 2

(2) Apply a light coat of MIL–PRF–23699 lubricating oil to all threads and install pressure adjusting shaft in threaded bushing.

NOTE

As an initial adjustment, carefully turn pressure adjusting valve shaft clockwise until it contacts seat; then back out 1 1/2 –2 turns.

(3) Install pressure adjusting valve shaft and threaded bushing assembly in pump cover. Torque bushing to 300–500 lb in. and install lockwire. (QA)

g. Install preformed packings (18 and 19) on filter assembly (12) and coat with MIL–PRF–23699 lubricating oil.

h. Install filter assembly (12) on pump body (6) with washers (20) and nuts (21). Torque nuts to 74–89 lb in. (QA)

7. **INSTALLATION**.

Support Equipment Required

Part No./Type Designation	Nomenclature
–––	Wrench, torque (0–100 lb in.)

Materials Required

Specification No./Part No.	Nomenclature
AS3085–120	Packing, preformed
AS3085–131	Packing, preformed
MIL–PRF–23699	Oil, lubricating
Permatex 1372 or Loctite 30588	Sealant

a. Install preformed packings (17, figure 1) in pump body (6) flange.

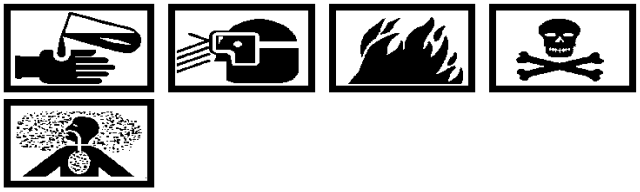

Lubricating Oil, MIL–PRF–23699 2

b. Apply MIL–PRF–23699, lubricating oil to pump drive shaft splines and preformed packings.

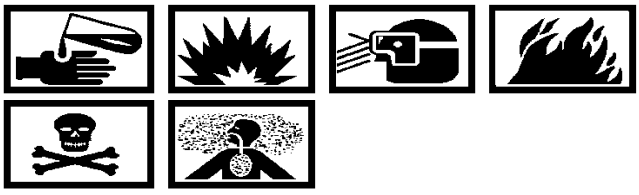

Sealing Compound Permatex No. 1372 or Loctite 30558 34

c. Apply Permatex 1372 or Loctite 30588 sealant to pump mounting flange. Secure pump to reduction gear unit with washers (24) and nuts (23). Torque nuts to 74–89 lb in. (QA)

INTERMEDIATE MAINTENANCE

MAINTENANCE

REDUCTION GEAR OIL FILTER ASSEMBLY

This Work Package Supersedes WP071 00, dated 15 November 2004

Reference Material

None

Alphabetical Index

Subject	Page No.
Assembly	3
Disassembly	2
Inspection	2
Installation	3
Removal	2

Record of Applicable Technical Directives

Type/No.	Date	Title and ECP No.	Date Inc.	Remarks
PPC–115	9/13/99	15 Micron Oil Filter	–	

1. **REMOVAL.**

a. Remove six self–locking nuts (1, figure 1) and six washers (2) that secure oil filter to reduction gear oil pump assembly.

CAUTION

Use care in removing filter to avoid damage to filter.

b. Install three 10–32 inch bolts in cover puller holes. Remove oil filter assembly (3) and preformed packings (4 and 5). Discard preformed packings.

2. **DISASSEMBLY.**

CAUTION

To prevent damage to the filter assembly and/or housing, remove the filter assembly by hand.

NOTE

A red pop–out (DELTA–P) indicator in actuated (extended) position requires that filter element shall be changed.

NOTE

The stem and screen assembly is an integral unit. Do not disassemble.

a. Remove the filter element (3, figure 2) from stem and screen assembly (1) and discard element (3) and both packings (2).

3. **INSPECTION.**

a. Inspect the filter for damage. If damaged, replace filter.

b. Inspect for contamination.

c. Discard element.

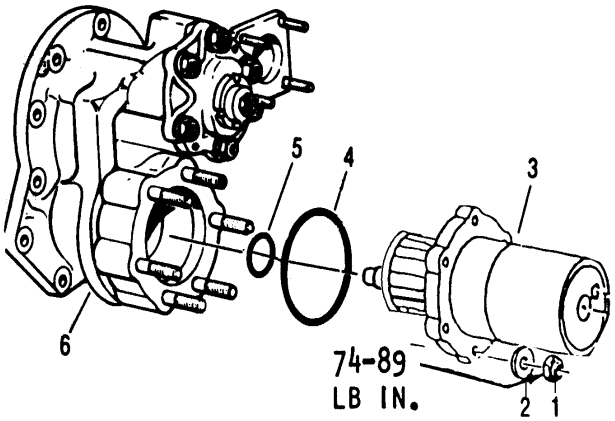

1. Nut
2. Washer
3. Oil Filter Assembly
4. Preformed Packing
5. Preformed Packing
6. Oil Pump Assembly

Figure 1. Reduction Gear Oil Filter Assembly

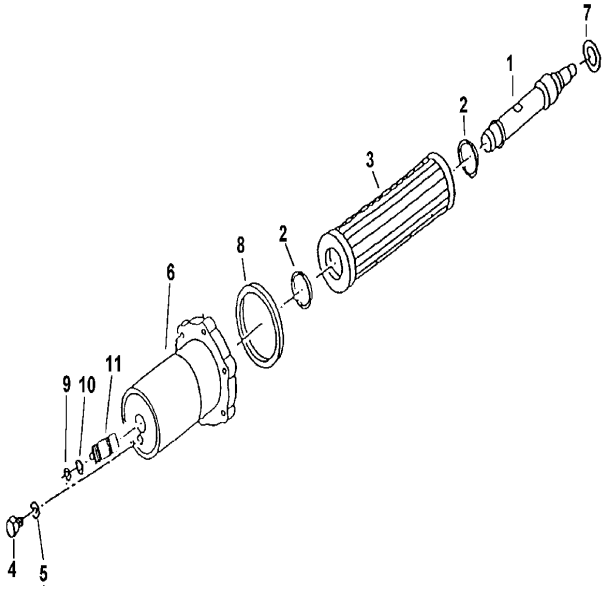

1. Stem and Screen Assembly
2. Preformed Packing
3. Filter Element
4. Drain Plug
5. Washer
6. Cover
7. Preformed Packing
8. Preformed Packing
9. Snap Ring
10. Preformed Packing
11. Differential Pressure Indicator

Figure 2. Reduction Gear Oil Filter Details

4. **ASSEMBLY.**

Materials Required

Specification No./Part No.	Nomenclature
MS20995C32	Lockwire, 0.032 inch
MIL–PRF–23699	Oil, Lubricating

Lubricating Oil, MIL–PRF–23699 2

a. Lubricate all packings.

b. Install oil filter element (3, figure 2) and two packings (2) on stem and screen assembly (1).

c. Install packing on stem and screen assembly (1).

d. Install stem and screen assembly (1) in filter cover (6). Hand tighten.

e. Install new packing on filter cover (6).

5. **INSTALLATION.**

Support Equipment Required

Part No./Type Designation	Nomenclature
–––	Torque Wrench 0 to 100 pound–inch

Materials Required

Specification No./Part No.	Nomenclature
MS20995C32	Lockwire
MIL–PRF–23699	Oil, Lubricating
AS3085–113	Packing, preformed
AS3085–231	Packing, preformed

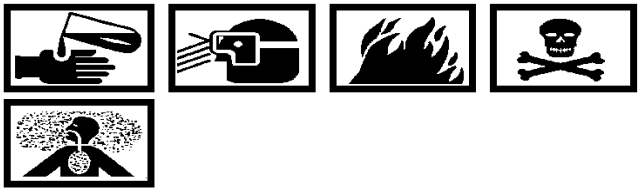

Lubricating Oil, MIL–PRF–23699 2

a. Coat groove in cover (6, figure 2) and new preformed packings (7 and 8) with MIL–PRF–23699 oil.

b. Install preformed packings (7 and 8) on stem and screen assembly and in cover (6).

c. Install stem and screen assembly (1, figure 2) in filter cover (6). Hand tighten.

CAUTION

To prevent damage to the filter assembly and/or housing, ensure oil filter assembly installs easily and the cover packing contacts the reduction gear oil pump body mounting surface before tightening nuts.

d. Install filter assembly (3, figure 1) in reduction gear oil pump body (6). Align the oil drain plug at the 12 o'clock or top–most position. Secure the filter assembly (3) with six washers and self–locking nuts (2 and 1). Torque nuts to 74–89 lb. in. (QA)

Lubricating Oil, MIL–PRF–23699 2

e. Apply lubricant to washer (5, figure 2) and install on drain plug (4).

f. Install drain plug (4 and 5, figure 2) onto filter cover (6). Torque to 40–50 lb. in. and lockwire. (QA)

g. If red pop–out (DELTA–P) indicator (11, figure 2) was exceeded, reset by pushing red pop–out indicator in until flush.

INTERMEDIATE MAINTENANCE

MAINTENANCE

REDUCTION GEAR MAGNETIC PLUG AND SCAVENGE OIL SCREEN ASSEMBLY

Reference Material

None

Alphabetical Index

Subject Page No.

Cleaning 2
Inspection 2
Installation 3
Magnetic Plug Insert Replacement 4
Removal 2
Repair 3

Record of Applicable Technical Directives

None

1. **REMOVAL**.

Support Equipment Required

Part No./Type Designation	Nomenclature
6796735	Wrench, oil screen spanner

a. Remove lockwire and disconnect electrical connector from magnetic plug (1, figure 1).

b. Remove lockwire and unscrew magnetic plug from body (4). Remove and discard gasket (2).

c. Using 6796735 oil screen spanner wrench (figure 2) remove oil screen (3, figure 1).

2. **INSPECTION**.

Support Equipment Required

Part No./Type Designation	Nomenclature
AN/USM–311	Multimeter

a. Make a resistance check as follows:

NOTE

When performing the resistance check, use care to avoid shorting the ohmmeter test leads against each other. Also do not touch bare portion of test leads when taking resistance reading because the human body can indicate a resistance value below 20,000 ohms.

(1) Using an ohmmeter type instrucment, measure the resistance across the magnet plug poles. This resistance can be measured on the RX 100, RX 1,000, or RX 10,000 scale.

(2) A resistance of 20,000 ohms or less requires removal of magnetic plug for visual inspection.

b. Check magnetic plug upon removal as follows:

(1) During normal operation of an engine some accumulation of fuzz–like magnetic particles will be found on plug. This is acceptable.

(2) Accumulation of other materials, such as non–metallic sludge, small silver or non–magnetic flakes, bronze powder or machining chips of magnesium or aluminum (the latter specially on new units) are acceptable.

(3) Hair–like magnetic strands (particles) as long as two inches are acceptable.

(4) Flakes of magnetic material having a 1/16 inch diameter or larger indicates a failure starting. This condition is not acceptable.

(5) Chunks of metal, other than fuzz or hair–like slivers, are indication of actual failure or failure starting. This condition is not acceptable.

c. Make a log entry, if metal contamination is present, in Aeronautical Equipment Service Record, NAVAIR Form 13090/20, Miscellaneous History NAVAIR Form 13090/6A, Part III.

d. Check condition of magnetic plug threads. If threads are crossed or burred, replace magnetic plug.

e. Check condition of magnetic plug potting compound. Cracks are permitted provided there are no epoxy chunks missing at any one crack intersection. Magnetic plug with missing epoxy chunks shall be replaced.

f. Inspect oil screen for damage and contamination.

3. **CLEANING**.

Materials Required

Specification No./ Part No.	Nomenclature
MIL–PRF–680, Type II	Solvent, cleaning

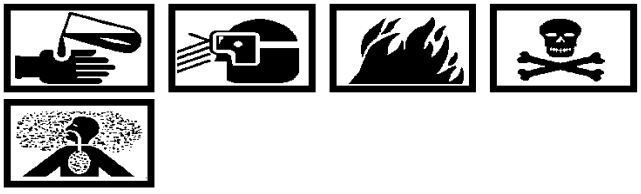

Dry Cleaning Solvent
MIL–PRF–680, Type II **3**

a. After magnetic particle inspection, clean magnetic plug in MIL–PRF–680, Type II cleaning solvent.

Dry Cleaning Solvent
MIL–PRF–680, Type II **3**

b. Clean screen of all foreign matter, using MIL–PRF–680, Type II cleaning solvent.

4. **REPAIR**.

a. No repair permitted. When inspection limits are exceeded, replace magnetic plug.

b. Replace screen found unserviceable.

5. **INSTALLATION**.

Support Equipment Required

Part No./Type Designation	Nomenclature
6796735	Wrench, oil screen spanner
–––	Wrench, torque (0–500 lb in.)

Materials Required

Specification No./Part No.	Nomenclature
23039032–3	Gasket, aluminum–parmite
MS20995C32	Lockwire, 0.032 inch

CAUTION

Use extreme care when tightening screen to prevent deformation of the screen.

a. Install screen (3) in reduction gear scavenge pump body (4).

b. Tighten screw finger tight using 6796735 oil screen spanner wrench (figure 2).

NOTE

The magnetic plug requires a aluminum –parmite gasket whereas the power section magnetic plug requires a preformed packing. Do not intermix the gasket and preformed packing.

c. Install a new gasket (2) on magnetic plug (1). Then install magnetic plug in body (4).

d. Torque magnetic plug to 240–300 lb in. and lockwire (QA)

e. Connect and lockwire electrical connector to magnetic plug. (QA)

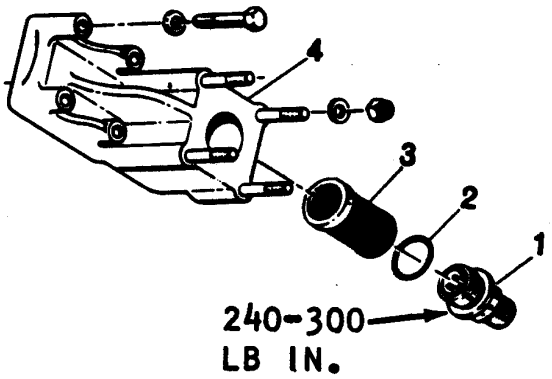

1. Magnetic Plug
2. Gasket
3. Screen
4. Body

Figure 1. Reduction Gear Magnetic Plug Details

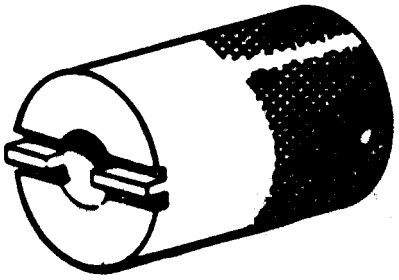

Figure 2. 6796735 Oil Screen Spanner Wrench

6. **REDUCTION GEAR SCAVENGE OUTLET BODY INSERT REPLACEMENT.**

Support Equipment Required

Part No./Type Designation	Nomenclature
6799863	Jig–drill and driver, drain plug insert lock pin hole
–––	Wrench, torque (0–300 lb in.)
–––	Wrench, torque (0–100 lb ft.)

Materials Required

Specification No./Part No.	Nomenclature
Armstrong A	Catalyst, epoxy resin mix
Armstrong A2	Adhesive, epoxy resin mix
TT–M–261	methyl–ethyl–ketone
MS20995C32	Lockwire, 0.032 inch
MIL-PRF-680, Type II	Solvent, dry cleaning
Thiokol LP–3	Flexibilizer, epoxy resin mix

a. Inspect magnetic plug insert, located at bottom of reduction gear rear housing looking rearward for oil leakage and damaged threads. Replace a damaged or leaking insert as follows:

(1) Using 6799863 jig–drill and driver (figure 4), drill out the insert pin or pins (figure 3) and remove insert.

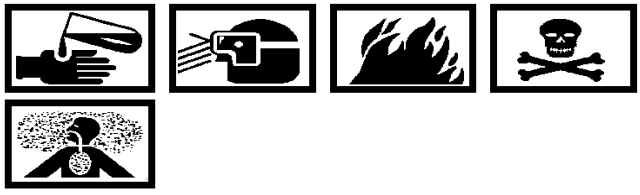

Dry Cleaning Solvent MIL–PRF–680, Type II **3**

(2) Clean threads of new insert and case with MIL–PRF–680, type II dry cleaning solvent and air dry.

Epoxy Resin Armstrong A–2 **36**

(3) Coat threads of insert and tapped hole with an epoxy resin adhesive. Mix adhesive as follows:

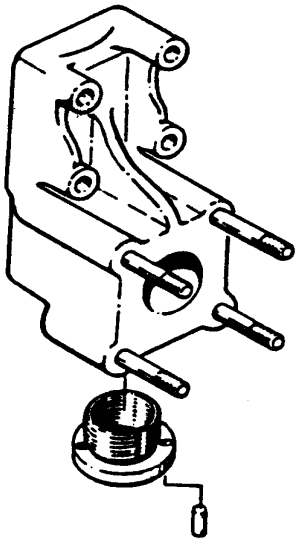

Figure 3. Magnetic Plug Scavenge Outlet Body Insert Location

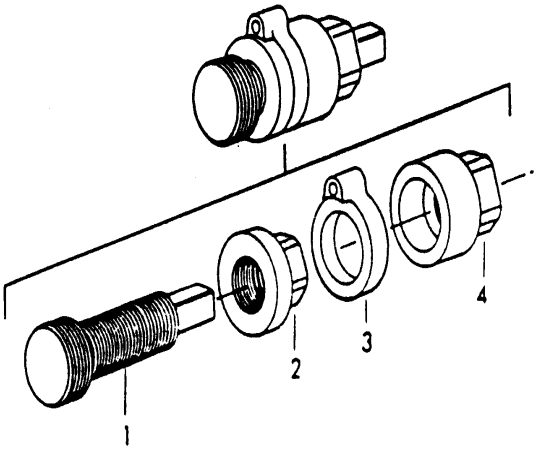

1. Screw
2. Nut
3. Bushing
4. Clamp Nut

Figure 4. 6799863 Drain Plug Insert Lock Pin Hole Drill and Driver Jig

CAUTION

The adhesive mixture must be used within 30 minutes after mixing. Adhesive that has started to setup shall not be used.

Epoxy Resin Armstrong A–2 **36**

(a) Combine 1 ml of catalyst and 6 gm of flexibilizer in a clean container and mix thoroughly.

(b) Combine 20 gm of adhesive with the catalyst–flexibilizer mixture and mix thoroughly with a glass or wood stirring rod.

(4) Install insert with 6799863 jig (figure 4) and torque to 60–80 lb ft. (QA)

(5) Use 6799863 jig–drill and driver to locate a new pin hole at least 3/16 in. from old pin hole. Drill a 0.1225–0.1236 in. dia. hole 0.328 in. deep from flange face.

(6) Select pin for drive fit. Pin must be 0.010–0.030 in. below surface.

(7) Stake metal over pin slightly at one location only. (QA)

NOTE

Use extreme care to prevent adhesive from entering the reduction gear and to ensure that insert inside diameter is free of adhesive.

Methyl Ethyl Ketone TT–M–261 **28**

(8) Remove excess adhesive with a clean cloth dampened with TT–M–261 methyl–ethyl–ketone.

(9) Do not disturb insert for two hours.

(10) Install magnetic plug. Torque to 240–300 lb in. and lockwire. (QA)

INTERMEDIATE MAINTENANCE

MAINTENANCE

POWER SECTION MAGNETIC PLUG

Reference Material

None

Alphabetical Index

Subject Page No.

Cleaning 2
Inspection 2
Installation 3
Removal 2
Repair 2

Record of Applicable Technical Directives

None

1. **REMOVAL**.

a. Remove lockwire and disconnect electrical connector from magnetic plug.

b. Remove lockwire and unscrew magnetic plug from pressure and scavenge oil pump. Remove and discard preformed packing (2, figure 1) from magnetic plug.

2. **INSPECTION**.

Support Equipment Required

Part No./Type Designation	Nomenclature
AN/USM–311	Multimeter

a. Make a resistance check as follows:

NOTE

When performing the resistance check, use care to avoid shorting the ohmmeter test leads against each other. Also do not touch bare portion of test leads when taking resistance reading because the human body can indicate a resistance value below 20,000 ohms.

(1) Using an ohmmeter type instrument, measure the resistance across the magnet plug poles. This resistance can be measured on the RX 100, RX 1,000, or RX 10,000 scale.

(2) A resistance of 20,000 ohms or less requires removal of magnetic plug for visual inspection.

b. Check magnetic plug upon removal as follows:

(1) During normal operation of an engine some accumulation of fuzz–like magnetic particles will be found on plug. This is acceptable.

(2) Accumulation of other materials, such as non–metallic sludge, small silver or non–magnetic flakes, bronze powder or machining chips of magnesium or aluminum (the latter specially on new units) are acceptable.

(3) Hair like magnetic strands (particles) as long as two inches are acceptable.

(4) Flakes of magnetic material having a 1/16 inch diameter or larger indicates a failure starting. This condition is not acceptable.

(5) Chunks of metal, other than fuzz or hair–like slivers, are indication of actual failure or failure starting. This condition is not acceptable.

c. Make a log entry, if metal contamination is present, in Aeronautical Equipment Service Record, NAVAIR Form 13090/20, Miscellaneous History NAVAIR Form 13090/6A, Part III.

d. Check condition of magnetic plug threads.

e. Check condition of magnetic plug potting compound. There is no limit to the number of potting compound cracks provided there are no epoxy chunks missing at any one crack intersection. Magnetic plug with missing epoxy chunks shall be replaced.

3. **CLEANING**.

Materials Required

Specification No./Part No.	Nomenclature
MIL-PRF-680, Type II	Solvent, cleaning

Dry Cleaning Solvent
MIL–PRF–680, Type II **3**

a. After magnetic particle inspection, clean the magnetic plug with MIL–PRF–680, Type II cleaning solvent.

4. **REPAIR**.

a. No repair permitted. When inspection limits are exceeded, replace plug.

5. **INSTALLATION**.

Support Equipment Required

Part No./Type Designation	Nomenclature
–––	Wrench, torque (0–500 lb in.)

Materials Required

Specification No./Part No.	Nomenclature
MS20995C20	Lockwire, 0.020 inch
MS20995C32	Lockwire, 0.032 inch
AS3085–118	Packing, preformed

NOTE

The power section magnetic plug requires a preformed packing whereas the reduction gear magnetic plug requires an aluminum–parmite gasket. Do not intermix the aluminum gasket and preformed packing.

a. Install a new preformed packing (2, figure 1) on magnetic plug (1). Install magnetic plug in main pressure and scavenge oil pump.

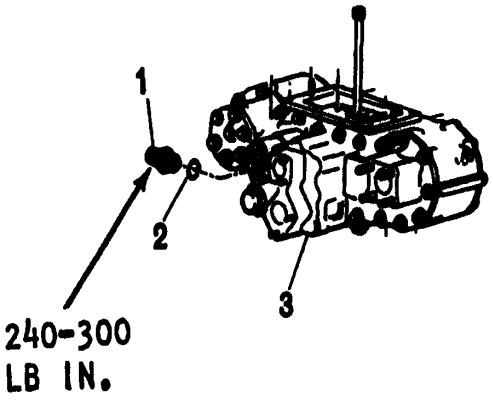

1. Magnetic Plug
2. Preformed Packing
3. Accessories Drive Housing

Figure 1. Power Section Magnetic Plug Details

b. Torque magnetic plug to 240–300 lb in. and lockwire (0.032 inch). (QA)

c. Connect electrical connector to magnetic plug. Tighten beyond finger tight (20 degrees max) until the connecting parts are in solid contact without damage. Secure with 0.020 inch lockwire. (QA)

INTERMEDIATE MAINTENANCE

MAINTENANCE

REDUCTION GEAR EXTERNAL OIL PRESSURE RELIEF VALVE ASSEMBLY

Reference Material

None

Alphabetical Index

Subject	Page No.
Assembly	3
Cleaning	2
Disassembly	2
Inspection	2
Installation	3
Removal	2
Repair	2

Record of Applicable Technical Directives

None

1. **REMOVAL**.

a. Remove lockwire and unscrew pressure relief valve (1, figure 1) from lower right side of reduction gear rear housing.

b. Remove and discard preformed packing (2) and gasket (3).

2. **DISASSEMBLY**.

a. Remove retaining ring (1, figure 2) from ID of valve body (6).

b. Remove relief cap (2), preformed packing (3), spring (4) and oil piston (5) from valve body.

3. **CLEANING**.

Materials Required

Specification No./Part No.	Nomenclature
MIL-PRF-680, Type II	Solvent, dry cleaning

Dry Cleaning Solvent
MIL–PRF–680, Type II **3**

a. Clean all parts of valve with MIL–PRF–680, Type II dry cleaning solvent.

4. **INSPECTION**.

a. Inspect valve body for cracks, scoring, and damage.

5. **REPAIR**.

a. No repair permitted. Replace valve assembly if valve body is cracked or scored.

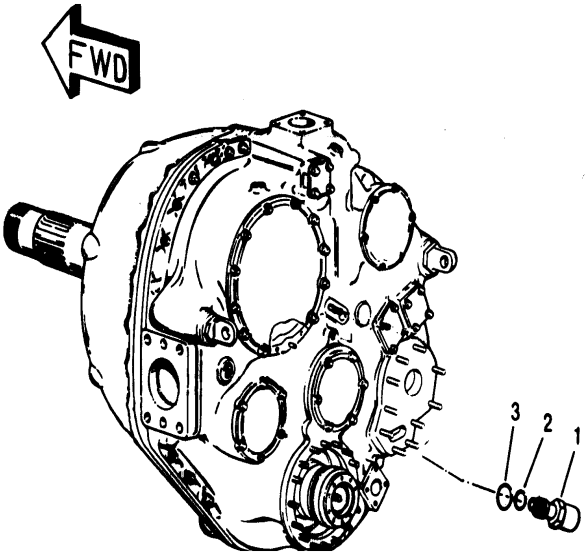

1. Pressure Relief Valve
2. Preformed Packing
3. Gasket

Figure 1. Reduction Gear External Oil Pressure Relief Valve Assembly

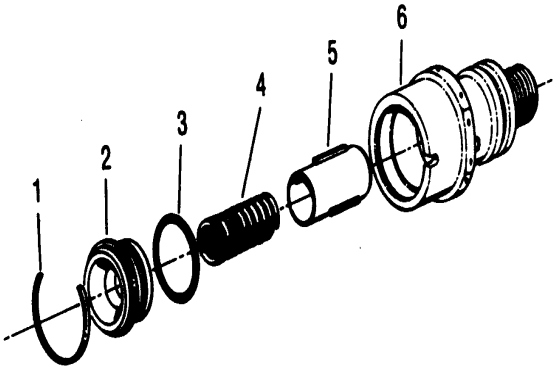

1. Retaining Ring
2. Relief Cap
3. Preformed Packing
4. Spring
5. Oil Piston
6. Valve Body

Figure 2. External Oil Pressure Relief Valve Details

6. **ASSEMBLY**.

Materials Required

Specification No./Part No.	Nomenclature
MIL–PRF–23699	Oil, lubricating
AS3085–015	Packing, preformed
6841232	Spring

Lubricating Oil, MIL–PRF–23699 **2**

a. Coat inside of valve body (6, figure 2) with MIL–PRF–23699 lubricating oil.

b. Install oil piston (5), new spring (4), new preformed packing (3), and relief cap (2) into valve body and secure with retaining ring (1).

7. **INSTALLATION**.

Support Equipment Required

Part No./Type Designation	Nomenclature
–––	Wrench, torque (0–300 lb in.)

Materials Required

Specification No./Part No.	Nomenclature
AN123029	Gasket
MIL–PRF–23699	Oil, lubricating
MS20995C32	Lockwire, 0.032 inch
AS3085–016	Packing, preformed

Lubricating Oil, MIL–PRF–23699 **2**

a. Coat pressure relief valve (1, figure 1) threads, preformed packing (2), gasket (3) and mating diameters with MIL–PRF–23699 lubricating oil.

b. Install preformed packing and gasket on pressure relief valve.

c. Install pressure relief valve on lower right side of reduction gear housing.

d. Torque to 140–160 lb in. and lockwire. (QA)

INTERMEDIATE MAINTENANCE

MAINTENANCE

POWER SECTION MAIN PRESSURE AND SCAVENGE OIL PUMP

Reference Material

None

Alphabetical Index

Subject	Page No.
Cleaning	2
Inspection	2
Installation	2
Removal	2
Repair	2

Record of Applicable Technical Directives

None

1. **REMOVAL**.

a. Remove lockwire and disconnect electrical connectors from magnetic plug. (9, figure 1)

b. Remove lockwire and unscrew magnetic plug (9) (some oil will drain). Remove and discard preformed packing (8).

c. Remove nuts (5) and washers (4). Carefully remove pump (1), gasket (2) and driveshaft (10) from accessory drive housing. Remove preformed packing (3).

d. Discard preformed packing (3) and gasket (2).

2. **CLEANING**.

Materials Required

Specification No./Part No.	Nomenclature
MIL-PRF-680, Type II	Solvent, cleaning

Dry Cleaning Solvent
MIL–PRF–680, Type II **3**

a. Clean pump with MIL–PRF–680, Type II cleaning solvent.

3. **INSPECTION**.

a. Carefully examine pump for any damage, cracks, or leaking seals.

b. Inspect for clogged or restricted scavenge back vent hole in pump housing. Clean vent hole if plugged.

c. Inspect driveshaft (10, figure 1) for damage.

4. **REPAIR**.

a. No internal or external repair of pump authorized, except for replacement of gasket (2), gasket (3), gasket (7) or preformed packing (9).

5. **INSTALLATION**.

Support Equipment Required

Part No./Type Designation	Nomenclature
---	Wrench, torque (0–150 lb in.)
---	Wrench, torque (0–500 lb in.)

Materials Required

Specification No./Part No.	Nomenclature
AS3085–118	Packing, preformed
AS3085–119	Packing, preformed
MS20995C20	Lockwire
MS20995C32	Lockwire
6784924	Gasket
6870042	Gasket

a. Check scavenge back–vent hole and gasket position for proper opening.

b. Install new AS3085–119 preformed packing (3, figure 1) on pump. Secure pump and new gasket to accessory drive housing with eight washers (4) and eight nuts (5). Torque to 74–89 lb in. (QA)

c. Install new AS3085–118 preformed packing (3) on magnetic plug (9) and install plug. Torque to 240–300 lb in. and lockwire (0.032 in.). (QA)

d. Connect electrical connector to magnetic plug (9). Tighten beyond finger tight (20 degrees max), until connecting parts are in solid contact without damage. Secure with 0.020 in. lockwire. (QA)

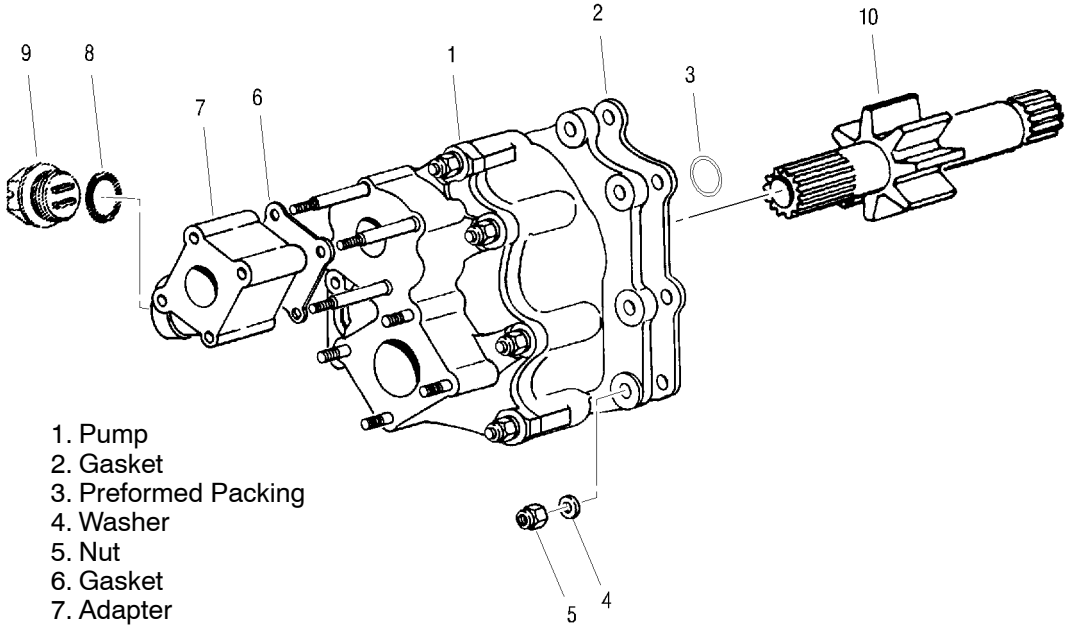

1. Pump
2. Gasket
3. Preformed Packing
4. Washer
5. Nut
6. Gasket
7. Adapter
8. Preformed Packing
9. Magnetic Plug
10. Driveshaft

Figure 1. Power Section Main Pressure and Scavenge Oil Pump Details

INTERMEDIATE MAINTENANCE

MAINTENANCE

POWER SECTION PRESSURE REGULATING VALVE

Reference Material

Engine Test, Procedures and Requirements . . . . . WP 023 00

Alphabetical Index

Subject	Page No.
Cleaning	2
Inspection	2
Installation	2
Removal	2
Repair	2

Record of Applicable Technical Directives

None

1. **REMOVAL**.

a. Remove lockwire, pressure regulating valve cap (1, figure 1) and preformed packing (2).

b. Remove plug lock (3).

c. Back out valve screw (4). Remove spring (5) and stem (6).

d. Remove poppet (7) from pump (8).

2. **CLEANING**.

Materials Required

Specification No./Part No.	Nomenclature
MIL-PRF-680, Type II	Solvent

Dry Cleaning Solvent MIL–PRF–680, Type II **3**

a. Clean valve parts in MIL–PRF–680, Type II cleaning solvent.

3. **INSPECTION**.

a. Inspect valve screw (4, figure 1), stem (6), and poppet (7) for damage, wear or scoring.

4. **REPAIR**.

a. Replace parts which are not serviceable.

5. **INSTALLATION**.

Support Equipment Required

Part No./Type Designation	Nomenclature
---	Wrench, torque (0–300 lb in.)

Materials Required

Specification No./Part No.	Nomenclature
AS3084–12	Preformed Packing
MIL–PRF–23699	Oil, lubricating

Materials Required (cont)

Specification No./Part No.	Nomenclature
MS20995C32	Lockwire, 0.032 inch
Permatex 1372 or Loctite 30588	Sealant
23031720	Spring, helical

Lubricating Oil, MIL–PRF–23699 **2**

a. Apply a light coat of MIL–PRF–23699, lubricating oil to valve parts.

b. Install stem (6, figure 1), poppet (7), new spring (5) and valve screw (4) in pump (8).

CAUTION

Do not force valve screw when it bottoms.

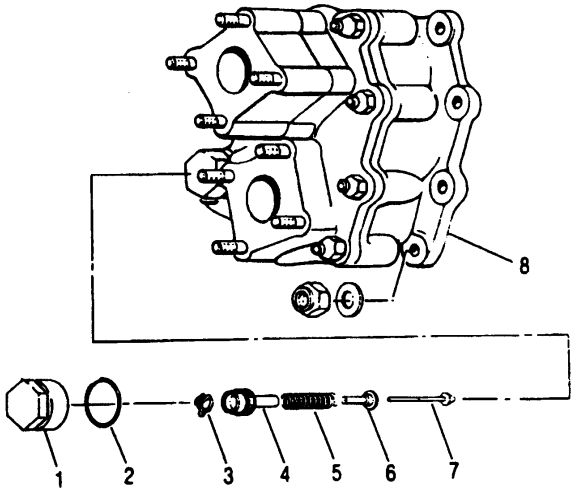

1. Pressure Regulating Valve Cap
2. Preformed Packing
3. Plug Lock
4. Valve Screw
5. Spring
6. Stem
7. Poppet
8. Pump

Figure 1. Power Section Pressure Regulating Valve Details

c. Screw in valve screw (4) until the top is approximately 1/16 inch below top of valve body.

CAUTION

The plug lock (3) must always engage the slots in both the valve screw and the valve body.

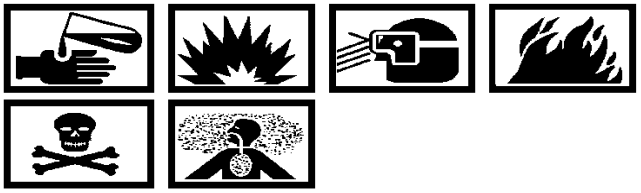

Sealing Compound Permatex No. 1372 or Loctite 30558 **34**

d. Apply Permatex 1372 or Loctite 30588 sealant to regulating valve cap flange (1). Install plug lock, pressure regulating valve cap (1) and preformed packing (2). Torque to 180–220 lb in. and lockwire. (QA)

e. Refer to WP 023 00 for adjustments.

INTERMEDIATE MAINTENANCE

MAINTENANCE

POWER SECTION OIL FILTER ASSEMBLY

This Work Package Supersedes WP077 00, dated 15 November 2004

Reference Material

None

Alphabetical Index

Subject	Page No.
Assembly	3
Disassembly	2
Inspection	3
Installation	3
Removal	2

Record of Applicable Technical Directives

Type/No.	Date	Title and ECP No.	Date Inc.	Remarks
PPC–115	09–13–99	15 Micron Oil Filter	–	

1. **REMOVAL.**

a. Remove six self–locking nuts (1, figure 1) and six washers (2) that secure oil filter to power section oil pump assembly.

CAUTION

Use care in removing filter to avoid damage to filter.

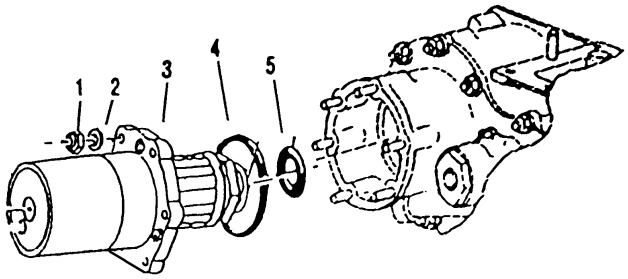

1. Nut
2. Washer
3. Oil Filter Assembly
4. Preformed Packing
5. Preformed Packing

Figure 1. Power Section Oil Filter

b. Install three 10–32 inch bolts in cover puller holes. Remove oil filter assembly (3) and preformed packings (4 and 5). Discard preformed packings.

2. **DISASSEMBLY.**

CAUTION

To prevent damage to the filter assembly and/or housing, remove the filter assembly by hand.

NOTE

The stem and valve assembly is an integral unit. Do not disassemble.

a. Using box–end wrench, loosen and unscrew the stem and valve assembly (6, Figure 2) from filter cover (3).

b. Remove the filter element (5) from stem and valve assembly (6) and discard element (5) and packings (4 and 8).

c. Remove packing (7) from stem and valve assembly (6) and discard.

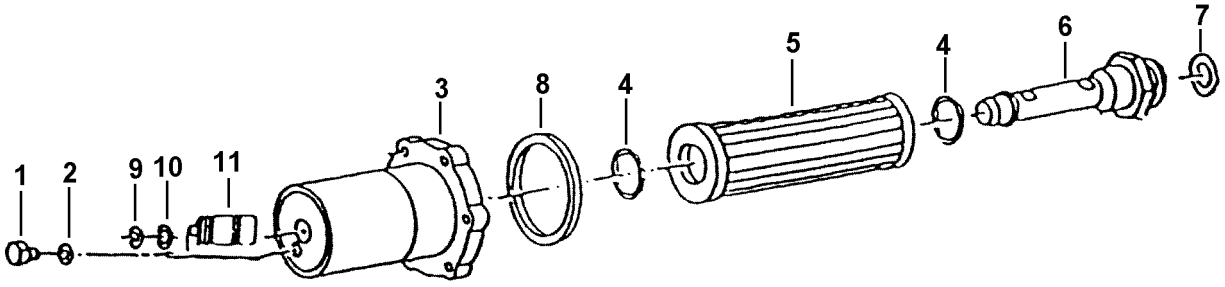

1. Plug, Drain
2. Preformed Packing
3. Cover
4. Preformed Packing
5. Filter Element
6. Stem and Valve Assembly
7. Preformed Packing
8. Preformed Packing
9. Snap Ring
10. Washer
11. Differential Pressure Indicator

Figure 2. Power Section Oil Filter Details

3. **INSPECTION.**

a. Inspect the filter for damage. If damaged, replace filter.

b. Inspect for contamination.

c. Discard element.

4. **ASSEMBLY.**

Support Equipment Required

Part No./Type Designation	Nomenclature
–––	Torque Wrench 0 to 150 pound–inch

Materials Required

Specification No./Part No.	Nomenclature
MS20995C32	Lockwire, 0.032 inch
MIL–PRF–23699	Oil, Lubricating
M83248/1–121	Packing
AS3085–231	Packing
AS3085–122	Packing

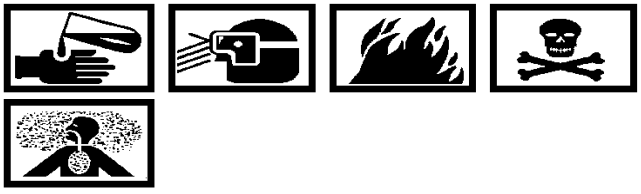

Lubricating Oil, MIL–PRF–23699 2

a. Lubricate all packings.

b. Install oil filter element (5, figure 2) and two packings (4) on stem and valve assembly (6).

c. Install packing (7) on stem and valve assembly (6).

d. Install stem and valve assembly (6) in filter cover (3). Hand tighten.

e. Install new packing (8) on filter cover (3).

5. **INSTALLATION.**

Support Equipment Required

Part No./Type Designation	Nomenclature
–––	Torque Wrench 0 to 150 pound–inch

Materials Required

Specification No./Part No.	Nomenclature
AS3085–231	Packing
MIL–PRF–23699	Oil, Lubricating
MS9241–122	Packing

NOTE

During installation procedures; remove caps and plugs from all open lines, ports, and fittings, as required.

Lubricating Oil, MIL–PRF–23699 2

a. Coat groove in cover (3, figure 2) and new preformed packings (7 and 8) with MIL–PRF–23699 oil.

b. Install preformed packing (8) in cover and preformed packing (7) on stem and valve assembly (6).

CAUTION

Before tightening nuts, be sure oil filter assembly can be easily installed and the preformed packing for the cover contacts the mounting surface.

c. Align the oil drain plug at the 6 o'clock position. Secure the filter assembly (3, figure 1) with six washers and six self–locking nuts (2 and 1) to power section oil pump assembly. Torque nuts to 74–89 lb. in. (QA)

d. Secure drain plug and washer (1 and 2, figure 2) onto filter cover (3). Torque to 40–50 lb. in. and lockwire. (QA)

e. If red pop–out (DELTA–P) indicator (11, figure 2) was exceeded, reset by pushing red pop–out indicator in until flush.

INTERMEDIATE MAINTENANCE

MAINTENANCE

POWER SECTION EXTERNAL SCAVENGE OIL PUMP ASSEMBLY

Reference Material

None

Alphabetical Index

Subject Page No.
Cleaning 2
Inspection 2
Installation 2
Removal 2
Repair 2

Record of Applicable Technical Directives

None

1. **REMOVAL**.

a. Disconnect tubes (1 and 2, figure 2) at the external scavenge oil pump (3).

NOTE

If it is necessary for clearance in removing the external scavenge oil pump, bolts holding clamps securing tubes may be removed.

b. Remove nuts (5, figure 1) and tube (13). Remove external scavenge oil pump from accessory drive housing (1).

c. Remove and discard preformed packings (2 and 3).

d. Remove unions (7 and 11), elbow (8) and nut (9) from pump for installation in new pump. Remove and discard preformed packings (6, 10 and 12).

2. **CLEANING**.

Materials Required

Specification No./Part No.	Nomenclature
MIL-PRF-680, Type II	Solvent, dry cleaning

Dry Cleaning Solvent MIL–PRF–680, Type II **3**

a. Clean all parts in MIL–PRF–680, Type II dry cleaning solvent.

3. **INSPECTION**.

a. Inspect external scavenge oil pump for damage and cracks.

b. Inspect splines of drive shaft (4, figure 2) for step wear. Replace external scavenge oil pump for step wear.

c. Inspect threads for damage.

4. **REPAIR**.

a. Replace if pump is cracked or threads are damaged.

5. **INSTALLATION**.

Support Equipment Required

Part No./Type Designation	Nomenclature
–––	Wrench, torque (0–150 lb in.)
–––	Wrench, torque (0–300 lb in.)

Materials Required

Specification No./Part No.	Nomenclature
AS3208–06	Packing, preformed
AS3085–028	Packing, preformed
MIL–PRF–23699	Oil, lubricating
MS20995C20	Lockwire, 0.020 inch
MS20995C32	Lockwire, 0.032 inch
6892265	Packing, preformed

Lubricating Oil, MIL–PRF–23699 **2**

a. Apply MIL–PRF–23699 oil to all threads, preformed packings, and to splines of pump drive shaft (4, figure 2).

b. Install unions (7 and 11, figure 1) and new preformed packings (6 and 12). Torque fittings to 100–150 lb in. (QA)

c. Install elbow (8), nut (9), and new preformed packing (10). Torque nut on elbow to 80–120 lb in. (QA)

d. Install new preformed packings (2 and 3) to pump. Ensure oil pump drive shaft (4, figure 2) is installed. Secure external scavenge oil pump to accessory drive housing (1, figure 1) with nuts (5). Torque nuts to 140–170 lb in. (QA)

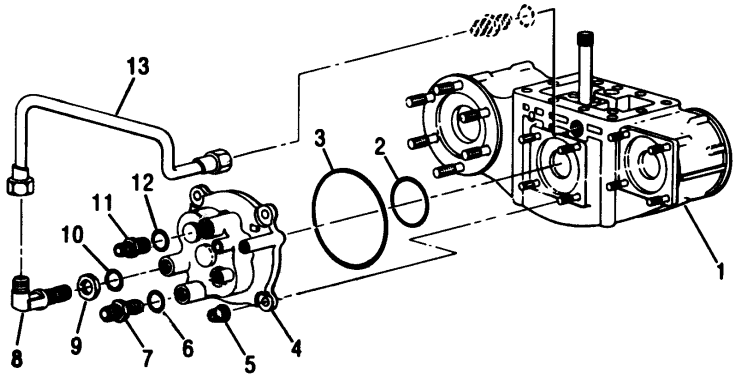

1. Accessory Drive Housing
2. Preformed Packing
3. Preformed Packing
4. Pump, External Scavenge Oil
5. Nut
6. Preformed Packing
7. Union
8. Elbow
9. Nut
10. Preformed Packing
11. Union
12. Preformed Packing
13. Tube

Figure 1. External Scavenge Oil Pump Details

e. Connect left and right side diffuser to scavenge pump tubes (1 and 2, figure 2) to external scavenge oil pump (3). Torque to 200–250 lb in. and apply torque stripe to nut. (QA).

f. If bolts holding clamps securing tubes (1 and 2) were removed in removal of external scavenge oil pump, install bolts and torque to 37–42 lb in.

g. Install tube (16, figure 1) to external scavenge oil pump and accessory drive housing.

(1) Torque accessory drive housing (1) end of tube (16) to 80–120 lb in. (QA)

(2) Torque elbow (11) end of tube (16) to 200–250 lb in. (QA)

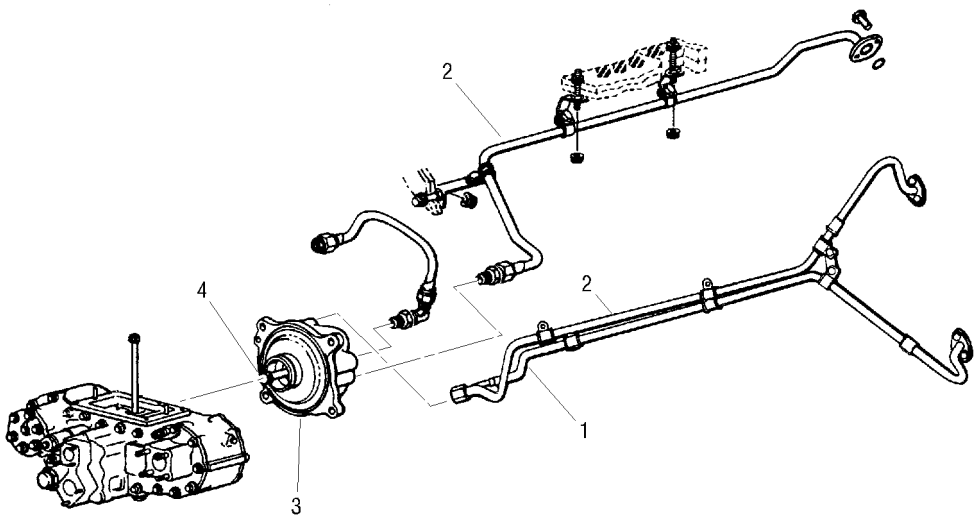

1. Left Side Diffuser to Scavenge Pump Tube
2. Right Side Diffuser–to–Scavenge Pump Tube
3. External Scavenge Oil Pump
4. Drive Shaft

Figure 2. External Scavenge Oil Tubes Details

INTERMEDIATE MAINTENANCE

MAINTENANCE

REDUCTION GEAR PROP FEATHER SOLENOID

Reference Material

None

Alphabetical Index

Subject	Page No.
Cleaning	2
Inspection	2
Installation	3
Removal	2
Repair	2

Record of Applicable Technical Directives

None

1. **REMOVAL**.

a. Remove lockwire, nut, and bolt that secures rod ends to the negative torque signal (NTS) lever.

b. Remove lockwire, bolts (2, figure 1), washers (3 and 4), bushing (5), from feather solenoid (1), and remove feather solenoid.

c. Remove washers (6).

2. **CLEANING**.

Materials Required

Specification No./Part No.	Nomenclature
MIL–C–85043	Cloth, low–lint
MIL-PRF-680, Type II	Solvent, cleaning

Dry Cleaning Solvent
MIL–PRF–680, Type II **3**

a. Clean exterior surfaces of feather solenoid with MIL–PRF–680, Type II solvent and a clean cloth.

3. **INSPECTION**.

Support Equipment Required

Part No./Type Designation	Nomenclature
AN/USM–311	Multimeter

a. Inspect feather solenoid housing for damage.

b. Inspect threads of electrical receptacle for damage.

c. Inspect electrical receptacle for corrosion and bent pins.

d. Replace solenoid if corrosion and/or bent pins are found.

e. Apply 28 V DC to pin A and ground pin C of feather solenoid.

f. Using AN/USM–311 multimeter, check for continuity between pins B and C to be sure plunger is fully bottomed.

g. Remove power from pin A and note lack of continuity between pins B and C.

4. **REPAIR**.

Materials Required

Specification No./Part No.	Nomenclature
KW11486	Spring, garter
KW13608	Boot, seal
MIL-PRF-680, Type II	Solvent, cleaning

a. Replace damaged seal boot (1, figure 2) as follows:

(1) Remove garter spring 2 and seal boot. Discard garter spring and seal boot.

(2) Remove overtravel coupling and plunger assembly (4 and 5) from feather solenoid.

Dry Cleaning Solvent
MIL–PRF–680, Type II **3**

(3) Clean plunger shaft and seal boot internal surfaces with MIL–PRF–680, Type II solvent. Wipe or air dry.

(4) Inspect surface of plunger for loss or damage of the gray electrofilm coating.

(5) If worn areas (loss of satin gray film) or damage is present, return feather solenoid assembly to overhaul.

(6) If inspection is satisfactory, install new seal boot and garter spring.

(7) Test the assembly per paragraph 3.e.

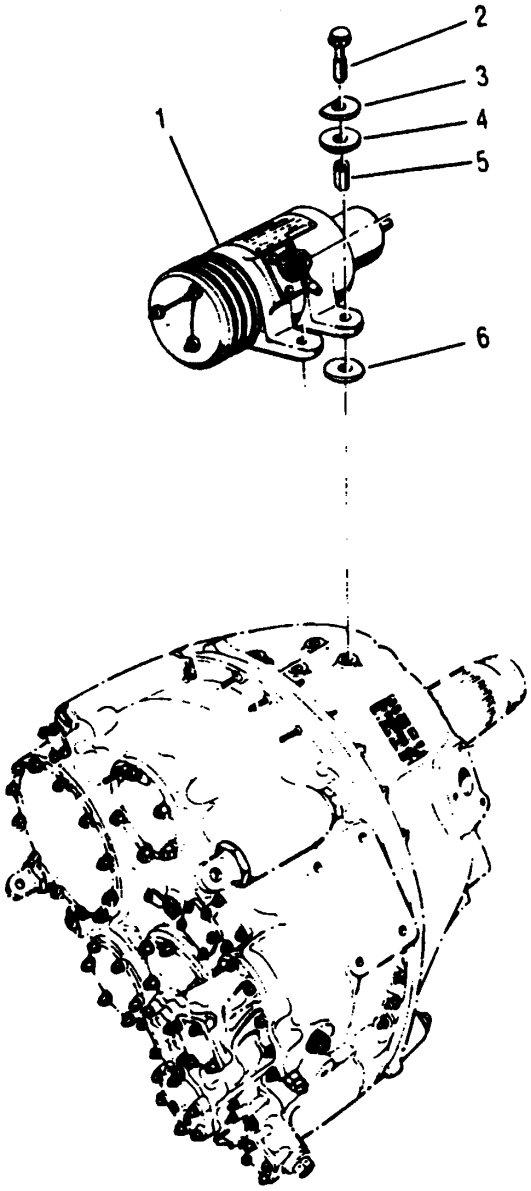

1. Feather Solenoid
2. Bolt
3. Washer
4. Nonmetallic Washer
5. Teflon Bushing
6. Nonmetallic Washer

Figure 1. Feather Solenoid Details

5. **INSTALLATION**.

Support Equipment Required

Part No./Type Designation	Nomenclature
---	Wrench, torque (0–150 lb in.)

Materials Required

Specification No./Part No.	Nomenclature
MS20995C32	Lockwire, 0.032 inch

a. Install feather solenoid (1, figure 1) on reduction gear unit with washers (3, 4, and 6), bushings (5) and bolts (2). Torque bolts to 15–20 lb in. Lockwire bolts. (QA)

b. Attach rod end to NTS lever and lockwire nut. (QA)

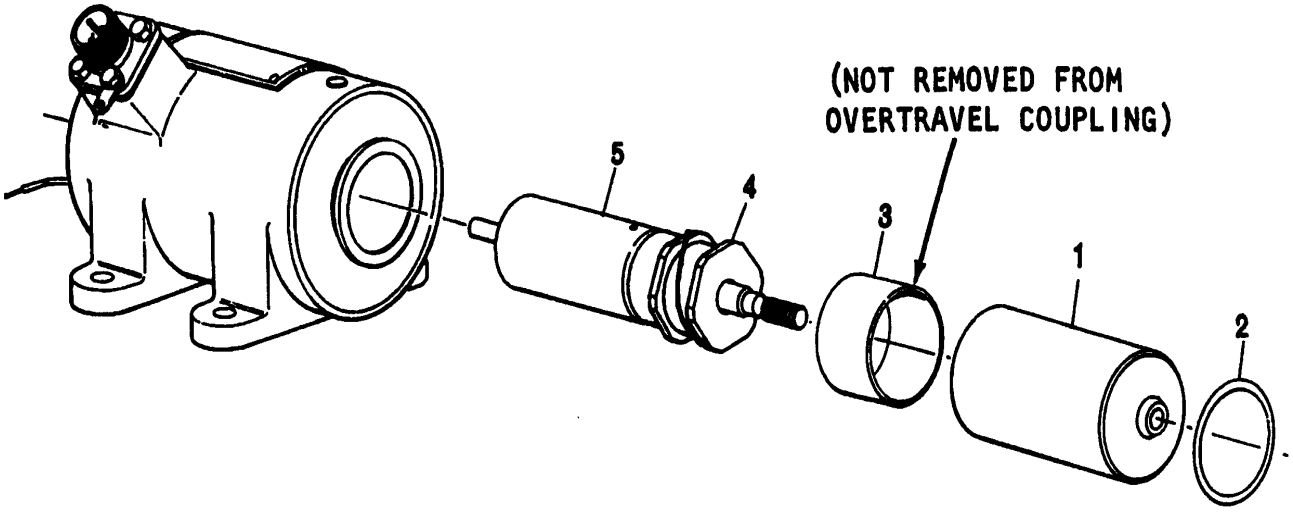

1. Seal Boot
2. Garter Spring
3. Plastic Insulation Sleeving
4. Overtravel Coupling
5. Plunger Assembly

Figure 2. Feather Solenoid Seal Boot and Plunger Details

INTERMEDIATE MAINTENANCE

MAINTENANCE

THRUST SENSITIVE SWITCH (TSS) ASSEMBLY

Reference Material

None

Alphabetical Index

Subject	Page No.
Cleaning	2
Inspection	2
Installation	3
Removal	2
Repair	3

Record of Applicable Technical Directives

Type/No.	Date	Title and ECP No.	Date Inc.	Remarks
PPC–98	1 April 86	Thrust Sensitive Switch Assembly, Replacement of	1 March 90	–––

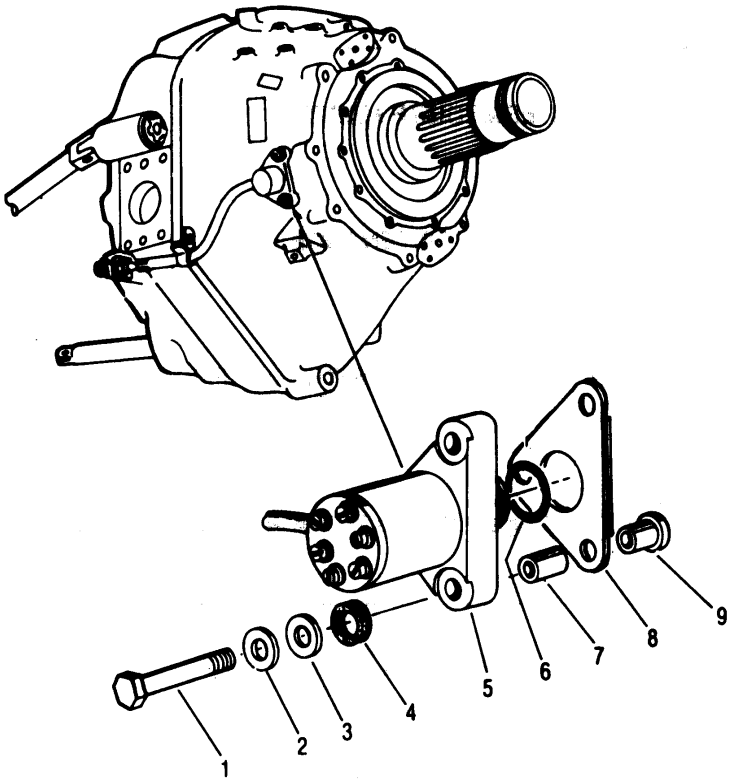

1. Bolt
2. Washer
3. Washer
4. Silastic and Fiberglass Washer
5. Thrust Sensitive Switch
6. Preformed Packing
7. Silastic and Fiberglass Tubing
8. Silastic and Fiberglass Gasket
9. Flanged Bushing

Figure 1. Thrust Sensitive Switch Details.

1. **REMOVAL.**

a. Remove lockwire, bolts (1, figure 1), and washers (2, 3 and 4).

b. Remove thrust sensitive switch (5), bushings (9), tubing (7) and gasket (8).

c. Discard gasket (8) and preformed packing (6).

2. **CLEANING.**

Materials Required

Specification No./Part No.	Nomenclature
MIL–C–85043	Cloth, low lint
MIL-PRF-680, Type II	Solvent, cleaning

Dry Cleaning Solvent
MIL–PRF–680, Type II **3**

a. Clean switch housing with MIL–PRF–680, Type II cleaning solvent and a clean cloth.

3. **INSPECTION**.

a. Inspect thrust sensitive switch housing for damage.

b. Inspect teflon conduit and electrical plug for damage or deterioration.

c. Inspect electrical plug pin contact for broken or damaged pins.

4. **REPAIR.**

a. Replace thrust sensitive switch if damaged or corroded.

5. **INSTALLATION.**

Materials Required

Specification No./Part No.	Nomenclature
AS3085–215	Packing, preformed
MS20995C32	Lockwire, 0.032 inch
6843227	Gasket, silastic and fiberglass

a. Install preformed packing (6, figure 1) on thrust sensitive switch (5) and insert a tube (7) into each mounting hole.

b. Install bushings (9), gasket (8) and thrust sensitive switch on reduction gear. Ensure that flat side of bushings (9) and gasket (8) is toward thrust sensitive switch.

c. Install bolts (1), washers (2 and 3), next to bolt head and washers (4) next to thrust sensitive switch. Torque bolts to 70–85 lb in. and lockwire. (QA)

INTERMEDIATE MAINTENANCE

REMOVAL AND INSTALLATION

POWER SECTION WIRING HARNESSES ASSEMBLIES

Reference Material

External Tubing, Cabling, and Clamping Supplement Manual . . . . . NAVAIR 02B–5DG–6–1–1

Alphabetical Index

Subject Page No.

Installation, Right and Left Side 2

Installation, Interconnecting 6

Removal, Harness 2

Record of Applicable Technical Directives

None

1. **HARNESS REMOVAL**

a. Mark location of clamps on harness.

NOTE

Clamp brackets should not be removed.

Clamps should not be removed if harness is to be reinstalled.

Only the harness needing repair or replacement should be removed.

b. Disconnect all harness connectors. (See figures 1, 2, and 3.)

c. Remove nuts and bolts securing wiring harness clamps to engine. Reinstall nuts and bolts with clamps removed.

2. **RIGHT SIDE INSTALLATION.**

Support Equipment Required

Specification No./Part No.	Nomenclature
––	Wrench, torque (0–50 lb in.)
––	Wrench, torque (0–150 lb in.)

Materials Required

Specification No./Part No.	Nomenclature
MS20995C–20	Lockwire, 0.020 inch

a. Refer to NAVAIR 02B–5DG–6–1–1 to connect the following electrical connectors. (See figure 1.)

NOTE

Connectors may be connected in any order that facilitates ease of installation.

b. Position right hand wiring harness assembly (1) and attach right hand wiring harness connector (2) to bracket at right front of accessory gearbox housing. Secure with four bolts and nuts and torque to 19–22 lb in. (QA)

NOTE

Do not lockwire the electrical connector to the accelerometer unit. This may cause feedback or erroneous noise to be transmitted to the Engine Monitoring System.

c. Connect compressor accelerometer connector (3). Torque to 62–97 lb in. and lockwire. (QA)

d. Connect the ground lead (4) to adel clamp bracket on the high pressure fuel filter. Torque to 37–42 lb in. and lockwire. (QA)

e. Connect low speed ground idle solenoid connector (5). Torque to 100–120 lb in. and lockwire. (QA)

f. Connect secondary fuel pump pressure switch connector (6). Torque to 70–90 lb in. and lockwire. (QA)

g. Connect fuel pump paralleling valve solenoid connector (7). Torque to 100–120 lb in. and lockwire. (QA)

h. Connect fuel manifold pressure switch connector (8). Torque to 100–120 lb in. and lockwire. (QA)

NOTE

Do not lockwire the electrical connector to the accelerometer unit. This may cause feedback or erroneous noise to be transmitted to the Engine Monitoring System.

i. Connect turbine accelerometer connector (9). Torque to 62–97 lb in. and lockwire. (QA)

3. **LEFT SIDE INSTALLATION.**

Support Equipment Required

Specification No./Part No.	Nomenclature
––	Wrench, torque (0–50 lb in.)
––	Wrench, torque (0–150 lb in.)

Materials Required

Specification No./Part No.	Nomenclature
MS20995C–20	Lockwire, 0.020 inch

a. Refer to NAVAIR 02B–5DG–6–1–1 to connect the following electrical connectors. (See figure 2.)

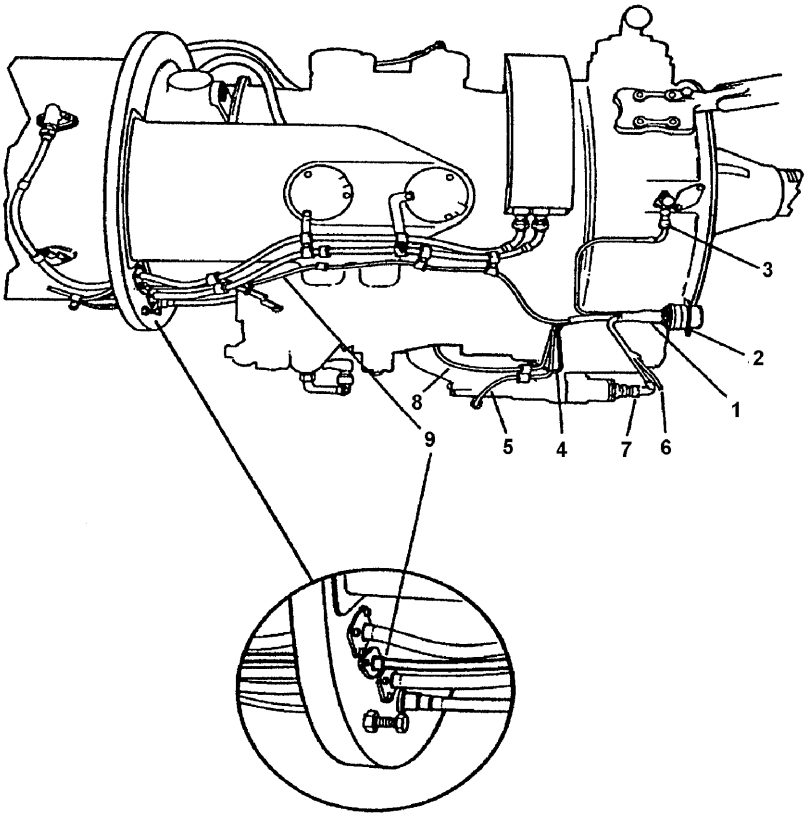

1. RH Wiring Harness Assembly
2. Connector, RH Wiring Harness
3. Connector, Compressor Accelerometer
4. Ground Lead
5. Connector, Low Speed Ground Idle Solenoid
6. Connector, Secondary Fuel Pump Pressure Switch
7. Connector, Fuel Pump Paralleling Valve Solenoid
8. Connector, Fuel Manifold Pressure Switch
9. Lead to Turbine Accelerometer Connector

Figure 1. Right Hand Wiring Harness

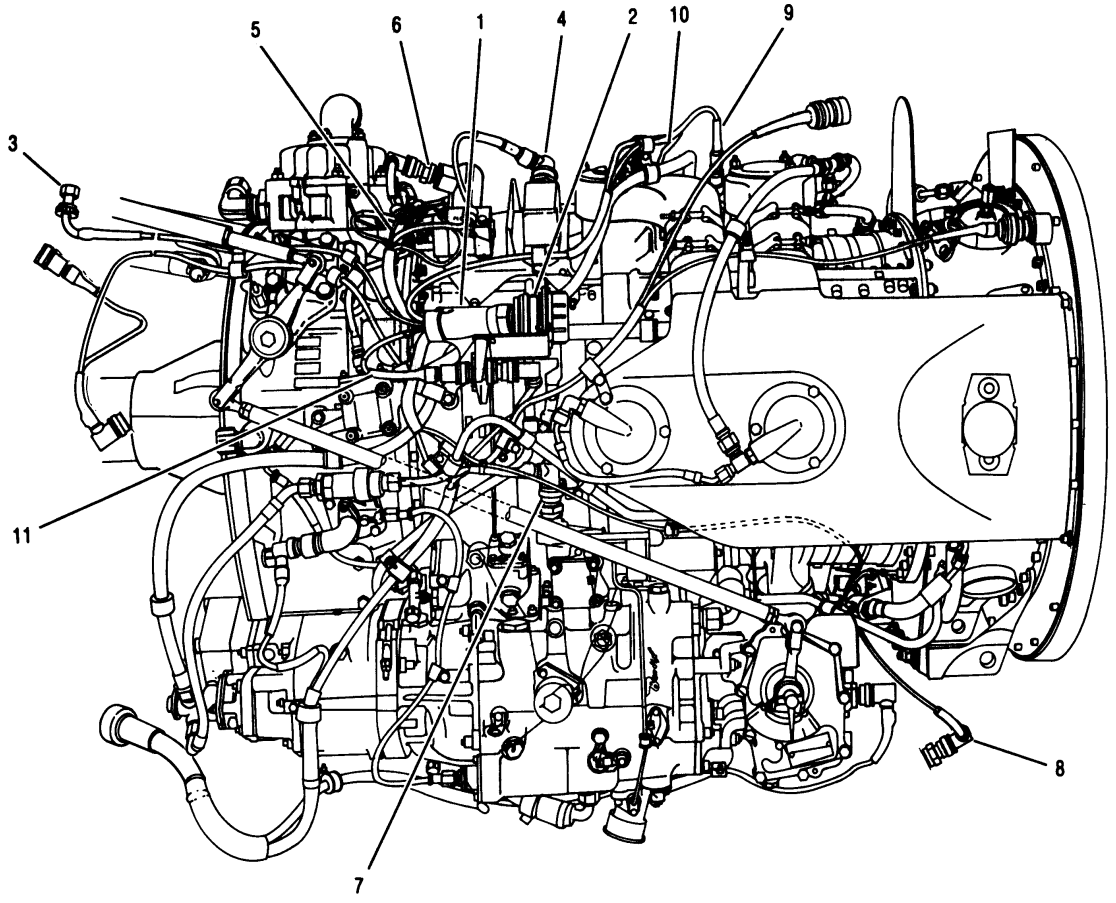

1. LH Wiring Harness Assembly
2. Connector, LH Wiring Harness
3. Connector, Reduction Gearbox Accelerometer
4. Connector, Ignition Relay
5. Connector, Ignition Exciter
6. Connector, Anti–ice Air Valve Solenoid
7. Connector, Fuel Valve Solenoid
8. Connector, Drain Valve Solenoid
9. Connector, Compressor Discharge Pressure Transducer
10. Connector, Compressor Discharge Temperature
11. Connector, Interconnecting Harness Jumper

Figure 2. Left Hand Wiring Harness

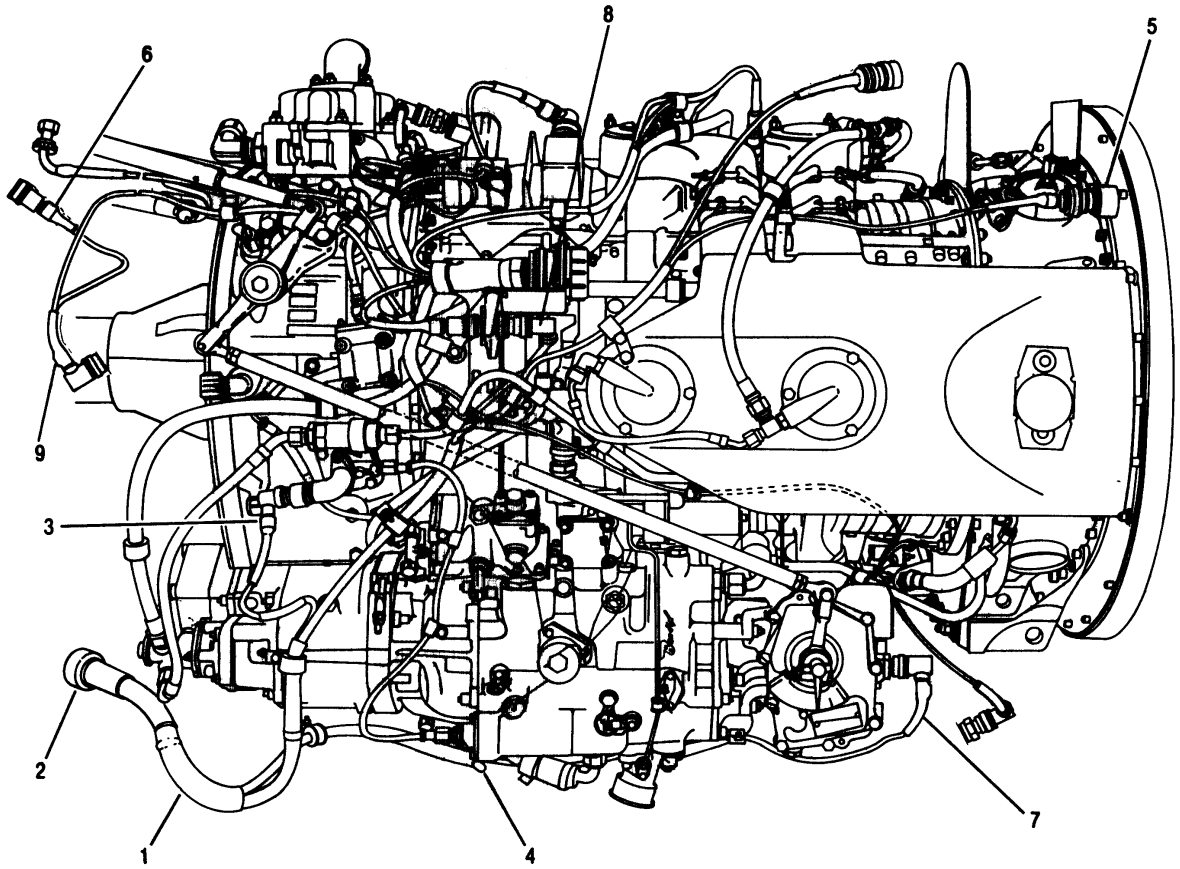

1. Interconnecting Wiring Harness Assembly
2. Connector, DEC Disconnect
3. Connector, Compressor Inlet Temperature Probe
4. Connector, Fuel Trim Valve
5. Connector, Thermocouple Pickup
6. Connector, Torque Indicator
7. Connector, PLA Coordinator Potentiometer
8. Connector, Left Harness Jumper
9. Connector, Torque Pickup

Figure 3. Interconnecting Wiring Harness

NOTE

Connectors may be connected in any order that facilitates ease of installation.

b. Position left hand wiring harness assembly (1, figure 2) and attach left hand wiring harness connector (2) to bracket at left compressor splitline. Secure bracket with four bolts and nuts. Torque to 14–16 lb in. (QA)

NOTE

Do not lockwire the electrical connector to the accelerometer unit. This may cause feedback or erroneous noise to be transmitted to the Engine Monitoring System.

c. Connect reduction gearbox accelerometer connector (3). Torque to 62–97 lb in. and lockwire. (QA)

d. Connect ignition relay connector (4). Torque to 140–160 lb in. and lockwire. (QA)

e. Connect ignition exciter connector (5). Torque to 70–90 lb in. and lockwire. (QA)

f. Connect fuel valve solenoid connector (7). Torque to 100–120 lb in. and lockwire. (QA)

g. Connect anti–ice air valve connector (6). Torque to 100–120 lb in. and lockwire. (QA)

h. Connect drain valve solenoid connector (8). Tighten finger tight until seated, plus 20° max angle of turn and lockwire. (QA)

i. Connect compressor discharge pressure transducer connector (9). Tighten electrical connector finger tight until connecting parts are seated and pin is visible through hole. Lockwire. (QA)

j. Connect compressor discharge temperature cannon plug (10). Tighten electrical connector finger tight until connecting parts are seated and pin is visible through hole. Lockwire. (QA)

k. Connect interconnecting harness jumper connector (11). Torque to 60–70 lb in. and lockwire. (QA)

l. Attach all wiring harness clamps with bolts and nuts. Torque 37–42 lb in. (QA)

4. **INTERCONNECTING INSTALLATION.**

Support Equipment Required

Specification No./Part No.	Nomenclature
––	Wrench, torque (0–50 lb in.)
––	Wrench, torque (0–300 lb in.)

Materials Required

Specification No./Part No.	Nomenclature
MS20995C–20	Lockwire, 0.020 inch

a. Refer to NAVAIR 02B–5DG–6–1–1 to connect the following electrical connectors. (See figure 3.)

NOTE

Connector may be connected in any order that facilitates ease of installation.

b. Position interconnecting wiring harness assembly (11) and connect DEC disconnect connector (2). Torque to 200–250 lb in. (QA)

c. Connect compressor inlet temperature probe connector (3). Turn plug 360 degrees until it locks into the detent. (QA)

d. Connect fuel trim valve connector (4). Turn plug 360 degrees until it locks into the detent. (QA)

e. Connect thermocouple pickup connector (5). Tighten plug finger tight until connecting parts are seated, plus 20 degree maximum angle of turn. Lockwire.(QA)

f. Connect temperature connector (10, figure 2). Tighten finger tight until seated and pin is visible through hole. Lockwire. (QA)

g. Connect torque indicator connector (6, figure 3). Tighten finger tight until seated, plus 20 degree maximum angle of turn. Lockwire. (QA)

h. Connect PLA coordinator potentiometer connector (7). Tighten finger tight until seated, plus 20 degree maximum angle of turn. Lockwire. (QA)

i. Connect left harness jumper branch connector (8). Tighten finger tight until seated, plus 20 degree maximum angle of turn. Lockwire (QA)

j. Connect torque pickup connector (9). Tighten finger tight until seated, plus 20 degree maximum angle of turn. Lockwire. (QA)

k. Attach all wiring harness clamps with nuts and bolts. Torque to 37–42 lb in. (QA)

INTERMEDIATE MAINTENANCE

MAINTENANCE

IGNITION EXCITER ASSEMBLY

Reference Material

None

Alphabetical Index

Subject	Page No.
Cleaning	2
Inspection	2
Installation	4
Removal	2
Repair	4

Record of Applicable Technical Directives

None

1. **REMOVAL**.

WARNING

Be sure that ignition has been off for at least five minutes before removing the ignition exciter. This time will allow the ignition exciter bleed resistors to dissipate energy stored in condensers.

a. Disconnect electrical leads (4 and 5, figure 1).

b. Remove nuts (2) and washers (3).

c. Remove ignition exciter (1) from compressor.

2. **CLEANING**.

Materials Required

Specification No./Part No.	Nomenclature
MIL–C–85043	Cloth, low lint
MIL-PRF-680, Type II	Solvent, cleaning

Lubricating Oil, MIL–PRF–23699	**2**

a. Clean ignition exciter with MIL–PRF–680, Type II cleaning solvent and a clean cloth.

3. **INSPECTION**.

a. Inspect ignition exciter for damage.

b. Inspect electrical connectors for corrosion.

c. Inspect electrical connectors for broken or damaged pins.

d. Test ignition exciter as follows:

CAUTION

Do not energize ignition exciter if spark igniter and leads are disconnected.

e. Connect two known satisfactory high tension ignition leads and air gap spark igniters of the type used on the engine to the ignition unit.

WARNING

Serious injury may result from contact with an energized igniter.

CAUTION

The ignition unit has a maximum continuous duty rating of three minutes in a 30 minute period. However, the operating cycle should not be more severe than two minutes on, three minutes off, two minutes on and 23 minutes off.

f. Apply 28 V DC from an auxiliary unit to the input terminal of ignition unit using a minimum wire size of 16 gage. Observe firing. (A repetitive spark of a rate of approximately 6 to 8 sparks per second should be observed at each igniter).

g. If either igniter fails to fire, or fires at a greatly reduced spark rate, replace the ignition exciter unit.

h. If there is question about the operation of the ignition exciter after the above tests, check the unit at 20 volts DC input voltage measured at the input terminals to the exciter.

i. The minimum acceptable spark rate at this input voltage is four sparks per second.

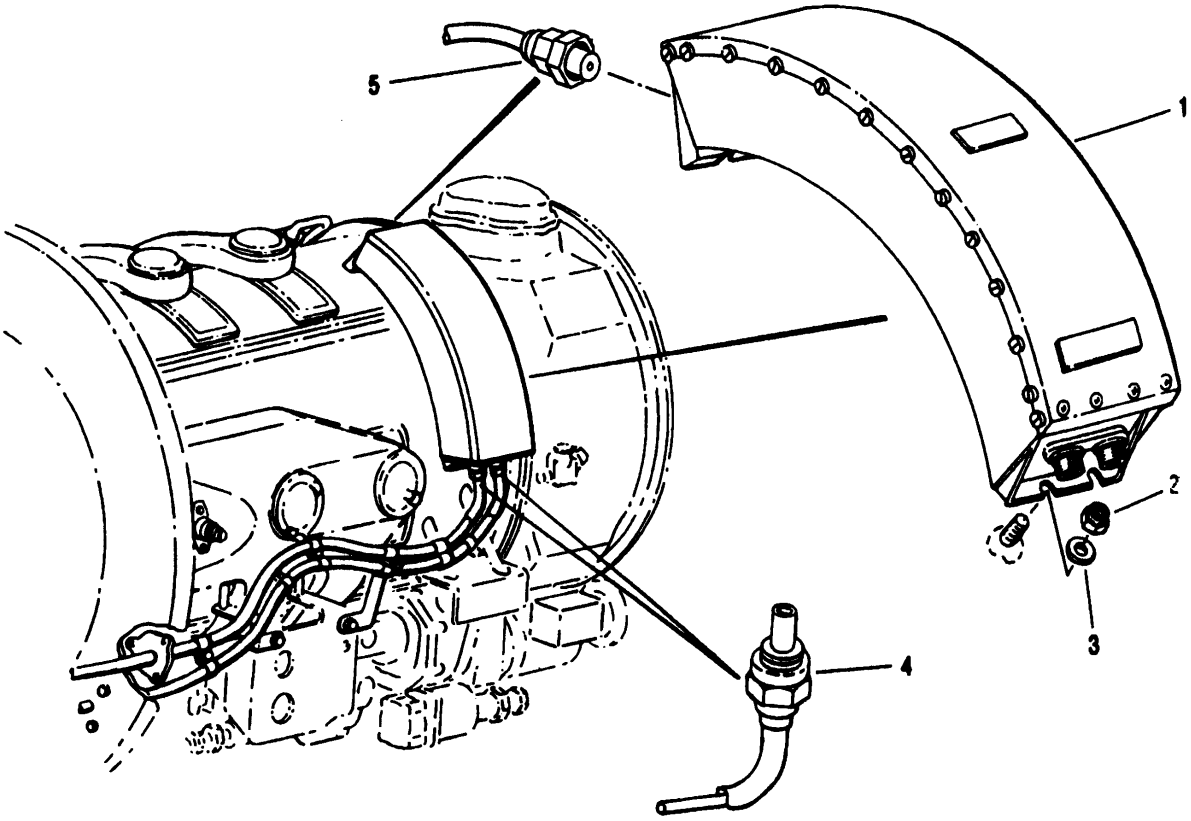

1. Exciter, Ignition
2. Nut
3. Washer
4. Lead, Spark Igniter
5. Lead, Ignition Exciter Input

Figure 1. Ignition Exciter Details

4. **REPAIR**.

a. Replace ignition exciter if unserviceable.

5. **INSTALLATION**.

Support Equipment Required

Specification No./Part No.	Nomenclature
––	Wrench, torque (0–100 lb in.)
––	Wrench, torque (0–200 lb in.)

Materials Required

Specification No./Part No.	Nomenclature
MS20995C20	Lockwire, 0.020 inch

a. Secure ignition exciter (1, figure 1) to compressor housing mounting studs with washers (3) and locknuts (2). Torque nuts to 74–89 lb in. (QA).

b. Connect electrical connectors (4), and torque to 100–120 lb in. Lockwire. (QA)

c. Connect electrical connector (5) and torque to 70–90 lb in. Lockwire. (QA)

INTERMEDIATE MAINTENANCE

MAINTENANCE

THERMOCOUPLE ASSEMBLIES

Reference Material

None

Alphabetical Index

Subject	Page No.
Cleaning	2
Inspection	2
Installation	4
Removal	2
Repair	4

Record of Applicable Technical Directives

None

1. **REMOVAL**.

Materials Required

Specification No./Part No.	Nomenclature
VV–P–216	Oil, penetrating

CAUTION

When removing nuts (1 and 2, figure 1), use VV–P–216 penetrating oil to prevent breaking terminals (4).

CAUTION

To prevent damage to thermocouple assembly, remove with care. Do not bend or kink attachments.

Penetrating Oil VV–P–216 **55**

a. Apply VV–P–216 penetrating oil to nuts. Allow sufficient time for oil to penetrate the treads.

b. Remove nuts (1 and 2) and leads (3) from terminal (4).

c. Remove nuts (5), thermocouple (6) and gasket (7).

2. **CLEANING**.

Support Equipment Required

Part No./Type Designation	Nomenclature
MIL–C–85043	Cloth, low–lint

Materials Required

Specification No./Part No.	Nomenclature
MIL-PRF-680, Type II	Solvent, dry cleaning

CAUTION

Do not immerse in or spray thermocouple with cleaning solvents. Liquid cleaning solvents will penetrate the porous magnesium oxide and cement insulation. Engine heat will vaporize the solvent leaving a residue containing carbon which causes a low resistance to ground and an unreliable reading.

Dry Cleaning Solvent MIL–PRF–680, Type II **3**

a. Using MIL–PRF–680, Type II dry cleaning solvent, wipe cable and thermocouple leads with a clean, dry, low lint cloth. Do not bend or kink lead.

3. **INSPECTION**.

Support Equipment Required

Part No./Type Designation	Nomenclature
23030189	Tester, Thermocouple Resistance

a. Using thermocouple resistance tester (1, figure 2), test thermocouple as follows:

(1) Plug tester into 100–120 VAC, 50–60 H_z power source.

(2) Install thermocouple (8) in contact housing cavity. Connect terminals to studs and install cap (9).

(3) Set POWER switch (3) to ON. Indicator light (4) illuminates.

(4) Adjust CURRENT ADJUST control (2) to 10 amperes while observing D.C. AMPERES meter (5).

(5) With D.C. AMPERES meter set at 10 amperes, observe and note reading on OHMS meter (6).

(6) Set POWER switch to off. Indicator light goes out.

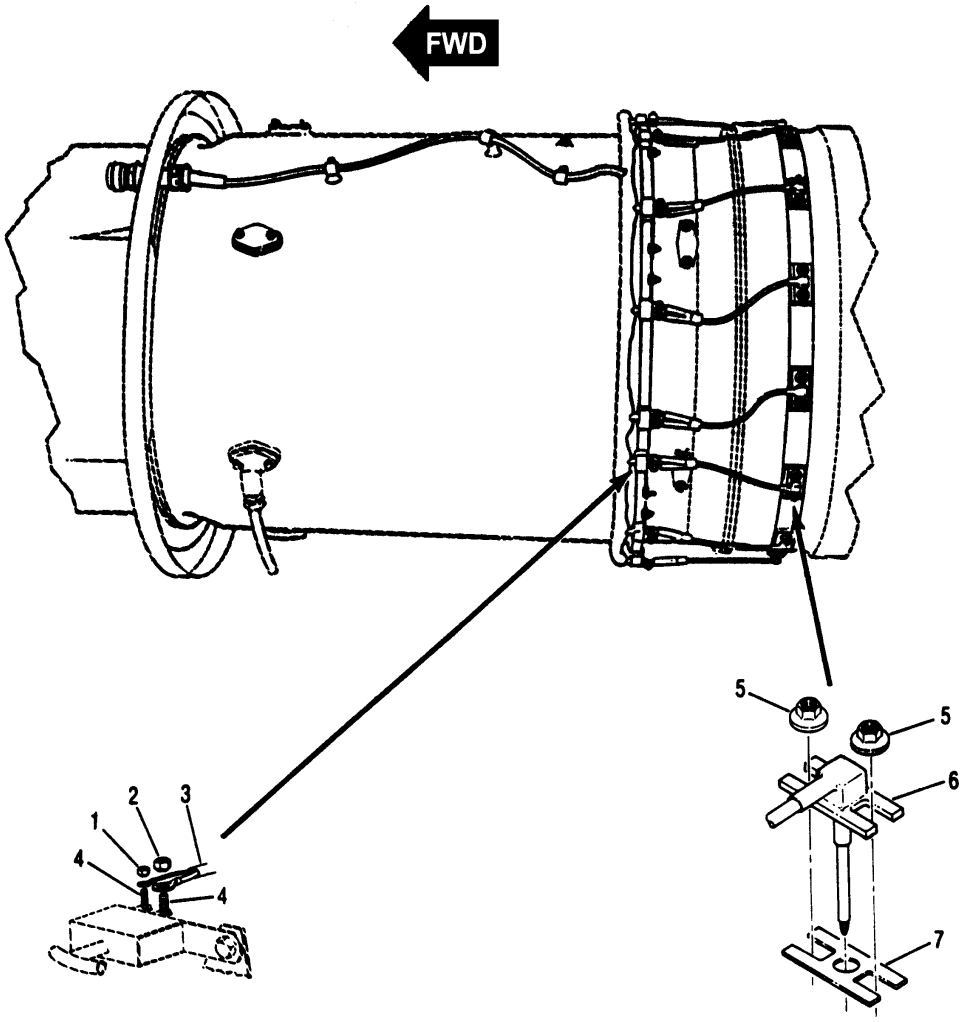

1. Nut, Chromel 8–32
2. Nut, Alumel 10–32
3. Lead
4. Terminal
5. Nut
6. Thermocouple
7. Gasket

Figure 1. Thermocouple Details

(7) Set pointer (7) on OHMS meter to reading noted in step (5).

(8) Allow thermocouple to cool to room temperature.

(9) Set POWER switch to ON. Indicator light illuminates.

(10) Observe OHMS meter for five seconds. Discard thermocouple if one of the following conditions exist.

(a) Open circuit – D. C. AMPERES meter remains at zero.

(b) Deterioration – Resistance drifts more than 0.015 ohms in five seconds.

(c) OHMS meter indicates a full scale reading.

(11) Set POWER switch to OFF. Indicator light goes out.

(12) Allow thermocouple to cool to room temperature and remove from tester.

4. **REPAIR**.

a. Replace thermocouple if inspection limits are exceeded.

5. **INSTALLATION**.

Support Equipment Required

Part No./Type Designation	Nomenclature
–––	Wrench, torque (0–100 lb in.)

a. Install gasket (7, figure 1) with raised portion of gasket toward thermocouple flange.

b. Install thermocouple (6) and nuts (5). Torque nuts to 40–60 lb in. (QA).

c. Install thermocouple leads (3) to studs (4). Chromel to 8–32 in. stud and Alumel to 10–32 in. stud. Do not bend leads.

d. Install 8–32 in. nut (1) (Chromel) and 10–32 in. nut (2) (Alumel). Torque nuts to 17–25 lbs in. (QA).

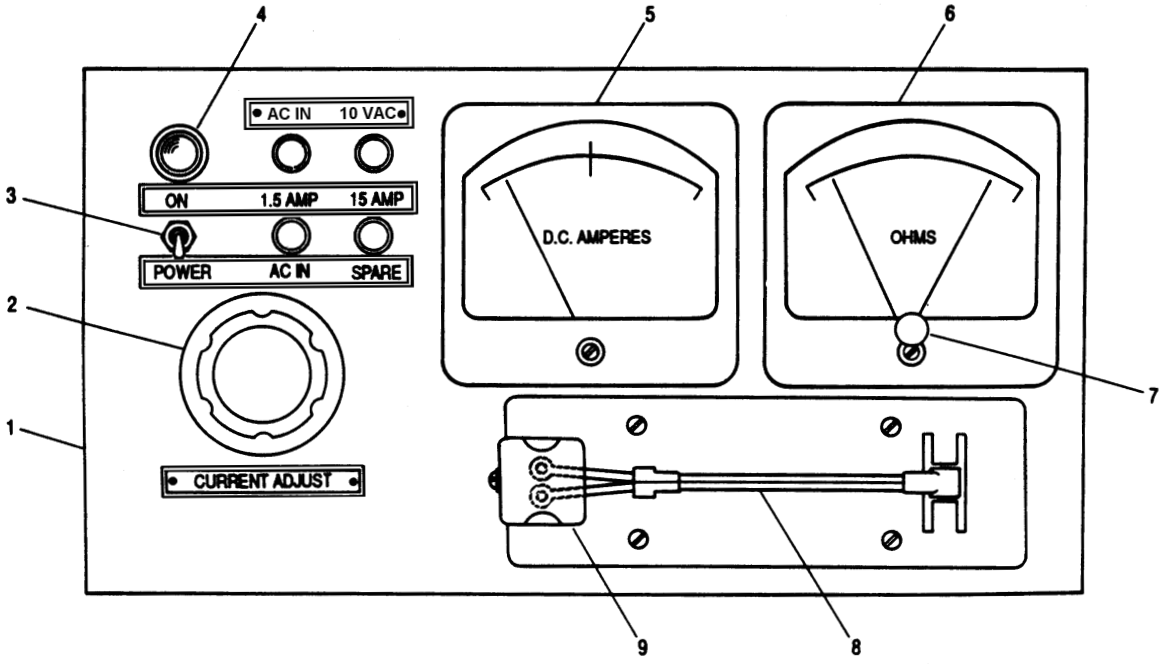

1. Tester
2. Current Adjust Control
3. Switch
4. Indicator Light
5. DC amperes meter
6. Ohms meter
7. Pointer
8. Thermocouple
9. Cap

Figure 2. Thermocouple Resistance Tester Details

INTERMEDIATE MAINTENANCE

MAINTENANCE

IGNITION RELAY

Reference Material

None

Alphabetical Index

Subject Page No.

Cleaning 2
Inspection 2
Installation 3
Removal 2
Repair 3

Record of Applicable Technical Directives

None

1. **REMOVAL**.

a. Remove lockwire and disconnect electrical connector (4, figure 1) at relay (1).

b. Remove lower bolt (3) and washer (2). Loosen upper bolt and remove relay.

2. **CLEANING**.

Materials Required

Specification No./Part No.	Nomenclature
MIL–C–85043	Cloth, low lint
MIL-PRF-680, Type II	Solvent, cleaning

Dry Cleaning Solvent
MIL–PRF–680, Type II **3**

a. Clean relay with MIL–PRF–680, Type II cleaning solvent and a clean cloth.

3. **INSPECTION**.

Support Equipment Required

Part No./Type Designation	Nomenclature
––	Power Supply (10 V DC)
–––	Power Supply (28 V DC)

a. The ignition relay consists of one five pin connector with the coil between pins A and B.

b. Testing is accomplished by using the following procedure:

(1) Connect a 10 V DC supply (having one side connected to ground) to pin C. Connect grounded lamps to pins D and E. If the lamps are turned on, a defective relay is indicated and the unit should be rejected.

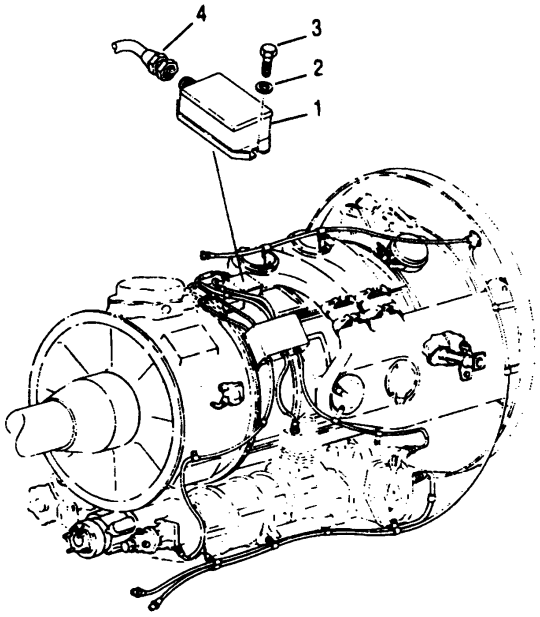

1. Ignition Relay
2. Washer
3. Bolt
4. Electrical Connector

Figure 1. Ignition Relay Details

(2) If step (1) is satisfactory, supply 10 V DC to pin A and ground pin B. Reject the unit if the lamps are not on when the relay is energized.

(3) If step (2) is satisfactory, remove voltage from pin A.

(4) Reject the unit if the lamps remain on.

c. Repeat steps (1), (2), (3), and (4), using 28 V DC instead of 10 V DC.

4. **REPAIR**.

a. Replace relay if inspection limits are exceeded.

5. **INSTALLATION**.

Support Equipment Required

Part No./Type Designation	Nomenclature
–––	Wrench, torque (0–150 lb in.)
–––	Wrench, torque (0–300 lb in.)

Materials Required

Specification No./Part No.	Nomenclature
MS20995C20	Lockwire, 0.020 inch
MS20995C32	Lockwire, 0.032 inch

a. Secure relay (1, figure 1) to bracket with bolts (3) and washers (2). Torque bolts to 74–89 lb in. (QA)

b. Connect electrical connector and torque to 140–160 lb in. Lockwire (0.020 inch) (QA)

INTERMEDIATE MAINTENANCE

MAINTENANCE

SPARK IGNITERS

Reference Material

None

Alphabetical Index

Subject	Page No.
Cleaning	2
Inspection	2
Installation (PPC–119 NINC)	3
Installation (PPC–119 INC)	4
Removal (PPC–119 NINC)	2
Removal (PPC–119 INC)	2
Repair	3

Record of Applicable Technical Directives

Type/No.	Date	Title and ECP No.	Date Inc.	Remarks
PPC–115	15 Jun 04	T56 Engine Borescope and Ignitor Plugs, Incorporation ECP 2123R1	15 Jul 04	

1. **REMOVAL**. (PPC–119 NINC)

Materials Required

Specification No./Part No.	Nomenclature
VV–P–216	Oil, penetrating

WARNING

Be sure ignition has been off for at least five minutes before removing a spark igniter. This time will allow the ignition exciter bleed resistors to dissipate energy stored in the condensers. To discharge any residual energy stored in the exciter condensers, short the igniter lead terminal to ground.

a. Disconnect spark igniter lead (9 and/or 10, figure 1.) Hold lead to prevent it from twisting while removing nut. Separate lead from igniter with no rotational movement.

Penetrating Oil VV–P–216 55

b. Apply VV–P–216, penetrating oil to bolts (2). Allow sufficient time for oil to penetrant the threads.

c. Remove lockwire, bolts (2), spark igniter (1), gasket (3), liner support (5) and gasket (7).

2. **REMOVAL.** (PPC–119 INC)

Materials Required

Specification No./Part No.	Nomenclature
VV–P–216	Oil, penetrating

WARNING

Be sure ignition has been off for at least five minutes before removing a spark igniter. This time will allow the ignition exciter bleed resistors to dissipate energy stored in the condensers. To discharge any residual energy stored in the exciter condensers, short the igniter lead terminal to ground.

a. Disconnect spark igniter lead (9 and/or 10, figure 1.) Hold lead to prevent it from twisting while removing nut. Separate lead from igniter with no rotational movement.

Penetrating Oil VV–P–216 55

b. Apply VV–P–216, penetrating oil to bolts (2). Allow sufficient time for oil to penetrant the threads.

NOTE

Metallic seals are reusable; do not discard unless there is evidence of damage.

c. Remove lockwire, bolts (2), spark igniter (1), metallic seal (4), liner support (6) and metallic seal (8).

3. **CLEANING**.

a. It is not necessary or desirable to clean the spark igniters. However, if inspection shows considerable carbon deposits, use a bristle brush or dry, clean cloth to clean the igniter.

4. **INSPECTION**.

a. Inspect the center electrode of spark igniter. Reject spark igniter if the 12 cooling holes (figure 2) are plugged or partially blocked, or if the tip is mushroomed. The spark igniter has a recessed tip that will erode slightly, this is a natural condition and does not affect spark igniter performance.

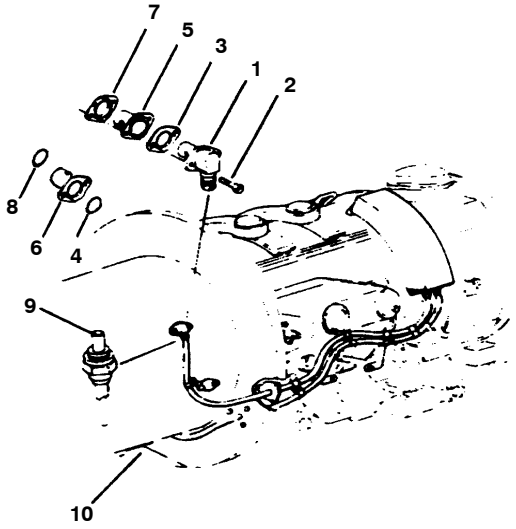

1. Igniter, Spark
2. Bolt
3. Gasket
4. Metallic Seal
5. Support, Liner
6. Liner Support
7. Gasket
8. Metallic Seal
9. Lead, Sprak Igniter (RH)
10. Lead, Spark Igniter (LH)

Figure 1. Spark Igniter Details

b. Inspect spark igniters and liner support assemblies for general condition. If wear–grooves around half the circumference of the spark igniter or liner support assembly probe body exceed 1/32 inch in depth, interchange the two spark igniters, i.e. place spark igniter from No. 2 combustion liner in No. 5 liner, and spark igniter from No. 5 combustion liner in No. 2 liner, and rotate liner supports 180°. When wear–grooves on both sides of the spark igniter or support assembly probe body exceed 1/32 inch in depth, replace spark igniter or support assembly.

c. Connect spark igniter to spark igniter lead (do not install in engine).

d. Apply 28 V DC to the ignition exciter (pin P of LH harness) and check firing by comparing questionable spark igniter with satisfactory spark igniter. (Differences in spark rate is not cause for rejection unless the spark is intermittent.)

e. A satisfactory spark igniter will have a high intensive blue spark.

5. **REPAIR**.

a. Replace spark igniter if not serviceable.

6. **INSTALLATION**. (PPC–119 NINC)

Support Equipment Required

Specification No./Part No.	Nomenclature
––	Wrench, torque (0–100 lb in.)
––	Wrench, torque (0–150 lb in.)

Materials Required

Specification No./Part No.	Nomenclature
NS165	Compound, Anti–seize (Never–Seez)
MS20995C32	Lockwire, 0.032 inch
6816047	Gasket
6724494	Gasket

WARNING

Be sure ignition has been off for at least five minutes before removing a spark igniter. This time will allow the ignition exciter bleed resistors to dissipate energy stored in the condensers. To discharge any residual energy stored in the exciter condensers, short the igniter lead terminal to ground.

Anti–seize Compound (Never Seez) NS165 **32**

a. Apply NS165 to bolts (2, figure 1).

CAUTION

The copper clad fiber gasket (7) must be installed next to the combustion case. The stamped sheet metal gasket (3) must be installed between liner support (5) and igniter (1). Incorrect installation of gaskets will result in damage to spark igniter.

NOTE

Be sure no moisture, lubricant, or foreign material is allowed to contact the spark igniter lead end or is in the electrical connector well of the spark igniter.

b. Install and secure gasket (7), liner support (5), gasket (3) and spark igniter (1) to the combustion outer casing with bolts (2). Torque bolts to 70–85 lb in. and lockwire. (QA)

CAUTION

Hold lead and spark igniter when installing lead to prevent twisting of lead or spark igniter.

c. Connect the high tension lead (9 or 10) to the spark igniter. Torque to 100–120 lb in. and lockwire. (QA)

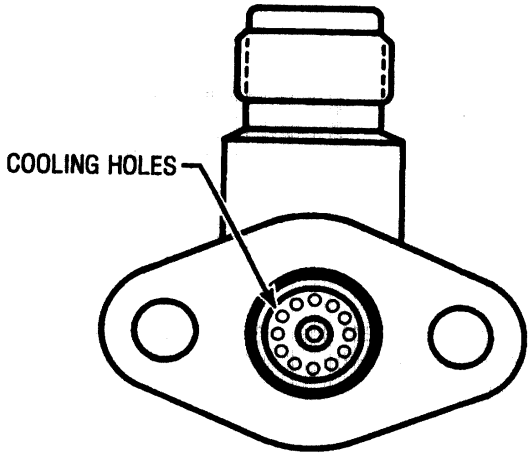

Figure 2. Spark Igniter Cooling Holes

7. **INSTALLATION**. (PPC–119 INC)

Support Equipment Required

Specification No./Part No.	Nomenclature
––	Wrench, torque (0–100 lb in.)
––	Wrench, torque (0–150 lb in.)

Materials Required

Specification No./Part No.	Nomenclature
NS165	Compound, Anti–seize (Never–Seez)
MS20995C32	Lockwire, 0.032 inch

WARNING

Be sure ignition has been off for at least five minutes before removing a spark igniter. This time will allow the ignition exciter bleed resistors to dissipate energy stored in the condensers. To discharge any residual energy stored in the exciter condensers, short the igniter lead terminal to ground.

Anti–seize Compound (Never Seez) NS165 32

a. Apply NS165 to bolts (2, figure 1).

CAUTION

The copper clad fiber gasket (7) must be installed next to the combustion case. The stamped sheet metal gasket (3) must be installed between liner support (5) and igniter (1). Incorrect installation of gaskets will result in damage to spark igniter.

NOTE

Metallic seals are reusable; do not discard unless there is evidence of damage.

b. Install metallic seal (4) and metallic seal (8) into liner support (6), and install spark igniter (1) into liner support. Install igniter assembly into combustion outer casing with bolts (2). Torque each bolt 10 to 15 inch–pounds. Continue to torque bolts in 5 inch–pound increments while alternating between bolts until a final torque of 25 to 35 inch–pound is reached. Lockwire bolts. (QA)

CAUTION

Hold lead and spark igniter when installing lead to prevent twisting of lead or spark igniter.

c. Connect the high tension lead (9 or 10) to the spark igniter. Torque to 100–120 lb in. and lockwire. (QA)

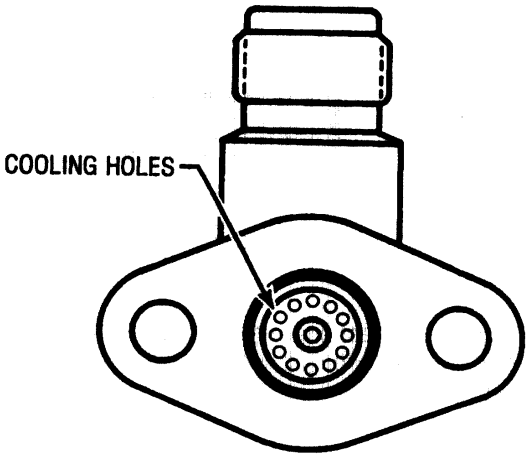

Figure 3. Spark Igniter Cooling Holes

INTERMEDIATE MAINTENANCE

MAINTENANCE

SPARK IGNITER LEADS (LH and (RH)

Reference Material

T56 Engine Piping, Cabling and Clamping Supplement . . . . . NAVAIR 02B–5DG–6–1–1
External Tubing and Cabling Installation . . . . . WP 005 00

Alphabetical Index

Subject Page No.
Cleaning 2
Inspection 3
Installation 3
Removal 2
Repair 3

Record of Applicable Technical Directives

None

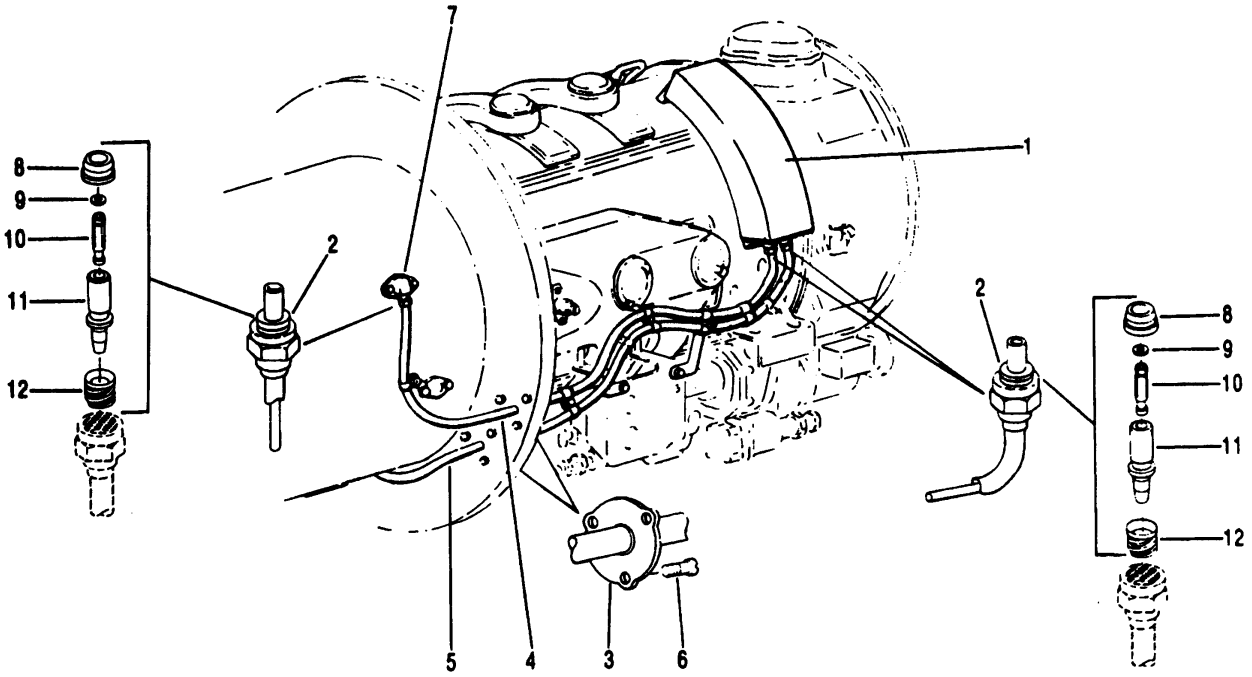

1. Exciter, Ignition
2. Terminal Assembly
3. Flange, Igniter Lead
4. Lead, Spark Igniter (RH)
5. Lead, Spark Igniter (LH)
6. Screw (6)
7. Spark Igniter (2)
8. Washer
9. Washer
10. Socket
11. Connector
12. Spring

Figure 1. Spark Igniter Leads Details

1. **REMOVAL.**

a. Disconnect terminal assembly (2, figure 1) at ignition exciter (1) and spark igniter (7).

b. Remove bolts, nuts, and clamps from spark igniter lead (4 or 5). Refer to NAVAIR 02B–5DG–6–1–1, WP 005 00.

c. Remove screws (6) from igniter lead flange (3).

d. Remove spark igniter lead from engine.

2. **CLEANING.**

Materials Required

Specification No./Part No.	Nomenclature
MIL–C–85043	Cloth, low–lint
MIL-PRF-680, Type II	Solvent, cleaning

CAUTION

Do not saturate or dip parts in solvent as damage to insulation will result.

Dry Cleaning Solvent
MIL–PRF–680, Type II **3**

a. Wipe spark igniter lead, using a clean, dry, lint–free cloth lightly dampened in MIL–PRF–680, Type II cleaning solvent.

3. **INSPECTION.**

a. Check flexible conduit for dents, kinks or damage to braided outer covering.

b. Inspect igniter lead flange (3), ferrules and nut assemblies for damage.

c. Inspect for loose or corroded spring (12).

d. Inspect connector (11) sleeve for damage.

e. Check socket (10) for broken or damaged segments.

f. Check for broken strands in conductor cable by giving terminal assembly ends a firm but even pull. (Do not twist terminal ends.)

g. If socket is loose, when pulled, or damage to cable is evident, replace spark igniter lead.

4. **REPAIR.**

a. Replace spark igniter lead when inspection limits are exceeded.

5. **INSTALLATION.**

Support Equipment Required

Part No./Type Designation	Nomenclature
––	Wrench, torque (0–50 lb in.)
––	Wrench, torque (0–150 lb in.)

Materials Required

Specification No./Part No.	Nomenclature
MS20995C20	Lockwire, 0.020 inch

a. Install LH or RH spark igniter lead (4 or 5, figure 1) by passing terminal assembly (2) through the fire wall from front to back.

b. Secure igniter lead flange (3) to forward face of fire wall with screws (6) and torque to 12–15 lb in. (QA)

c. Connect terminal assemblies to spark igniter (7) and ignition exciter (1). Torque fittings to 100–120 lb in. and lockwire. (QA)

d. Install brackets and clamps to spark igniter lead per NAVAIR 02B–5DG–6–1–1, WP 005 00.

INTERMEDIATE MAINTENANCE

MAINTENANCE

POWER SECTION THERMOCOUPLE HARNESS

Reference Material

E–2C, Power Plant System, Organizational Maintenance . . . . . NAVAIR 01–E2AAA–2–10

Alphabetical Index

Subject	Page No.
Cleaning	2
Inspection	2
Installation	4
Removal	2
Repair	4

Record of Applicable Technical Directives

None

1. **REMOVAL.**

a. Remove all nuts (10 and 12, figure 1) securing leads to the terminal assembly (8).

b. Remove bolts (9) and nuts (11) at each of the terminal assemblies.

c. Remove bolt from each clamp (2) of the main lead. If bracket (14) is installed at the center location, remove the clamp (2) and bracket (14) by removing the bolt from the combustion case.

d. Disconnect electrical connector (1) from receptacle (3).

e. Remove screws (6), washers (5) and nuts (4) and receptacle (3) from spray shield baffle (7).

f. Remove harness assembly (13).

2. **CLEANING.**

Materials Required

Specification No./Part No.	Nomenclature
MIL–C–85043	Cloth, low–lint
MIL-PRF-680, Type II	Solvent, cleaning

CAUTION

Do not immerse in or spray thermocouples or harness with cleaning solvents. Liquid cleaning solvents will penetrate the porous magnesium oxide and cement insulation. The engine heat will vaporize the solvent leaving a residue containing carbon which causes a low resistance to ground and an unreliable reading.

NOTE

Bent junctions may be carefully straightened provided such straightening does not crack or otherwise damage the wire.

Dry Cleaning Solvent
MIL–PRF–680, Type II **3**

a. Wipe braid with a cloth dampened with MIL–PRF–680, Type II solvent.

3. **INSPECTION.**

Support Equipment Required

Part No./Type Designation	Nomenclature
GR1864	Meter, Megohm

a. Check each terminal assembly for damaged threads or stud bases.

b. Inspect the main lead for broken wires or damage.

c. With GR1864 megohm meter on RX1 scale check continuity from each connector contact to the respective terminal studs.

NOTE

All Alumel and Chromel resistances should read within the same range.

d. Check the resistance between the Chromel and Alumel circuits or to ground from any Chromel stud and any Alumel stud. Resistance must be greater than 10,000 ohms at room temperature.

e. Check the insulation resistance of the harness using GR1864 megohm meter. The insulation resistance should be 100,000 ohm minimum at 500 volts DC.

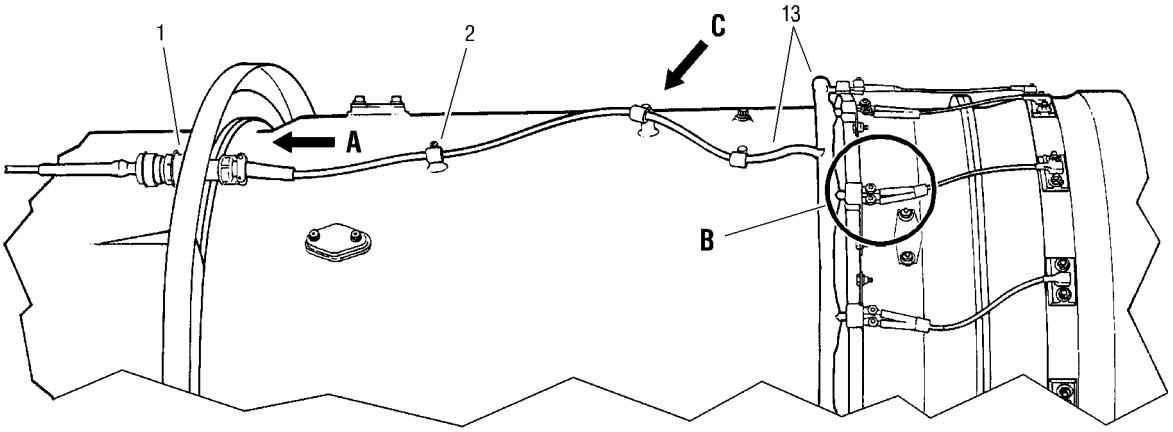

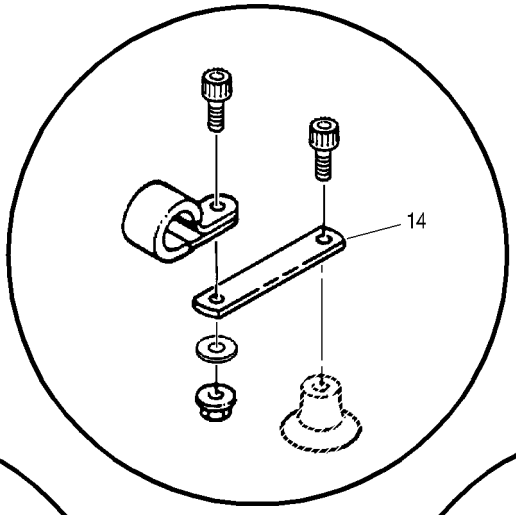

VIEW IN DIRECTION **C**

NOTE

Bracket (14) is used with 23055426 Harness Assembly only.

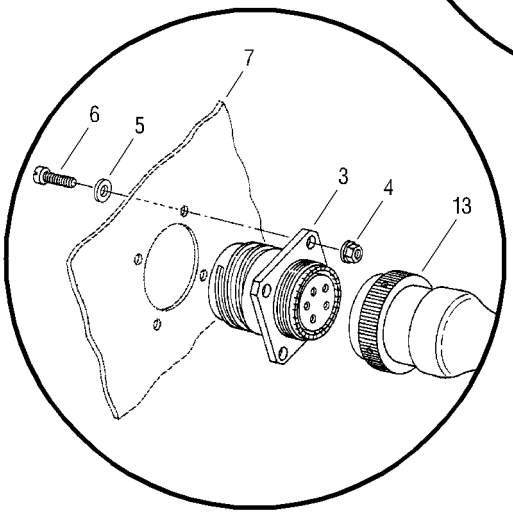

VIEW IN DIRECTION **A**

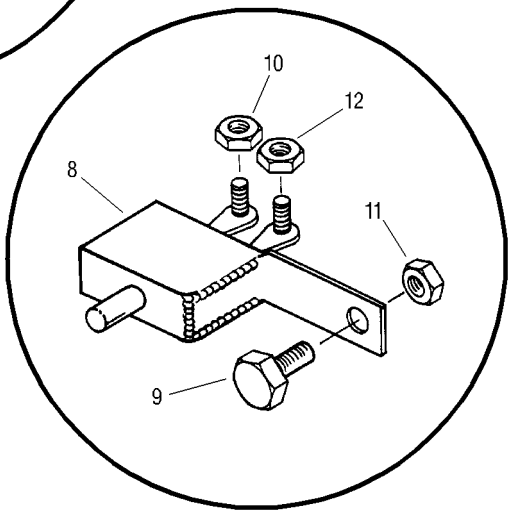

VIEW **B**

1. Electrical Connector
2. Bolt and Clamp (3)
3. Receptacle
4. Nut (4)
5. Washer (4)
6. Screw (4)
7. Spray Shield Baffle
8. Terminal Assembly
9. Bolt
10. Chromel Nut
11. Nut
12. Alumel Nut
13. Harness Assembly
14. MS9552–126 Bracket (Use with 23055426 Harness Assy only.)

Figure 1. Thermocouple Wiring Harness Details

4. **REPAIR.**

a. Replace harness assembly when the inspection limits are determined unsatisfactory.

5. **INSTALLATION.**

Support Equipment Required

Part No./Type Designation	Nomenclature
–––	Wrench, torque (0–50 lb in.)
–––	Wrench, torque (0–150 lb in.)

Materials Required

Specification No./Part No.	Nomenclature
MS20995C32	Lockwire, 0.032 inch

a. Secure harness assembly (13, figure 1) to support brackets on outer combustion case splitline with bolts (9) and nuts (11). Torque nuts 37–42 lb. in. (QA)

b. Attach each thermocouple lead to terminal assembly, using chromel and alumel nuts (10 and 12). Torque nuts 17–25 lb. in. (QA)

CAUTION

Ensure proper installation of the thermocouple harness assembly to prevent stretching the lead and damaging the connectors and/or pins.

c. Secure harness assembly to outer combustion case with bolts and clamps (2). If harness assembly P/N 23055426 is being installed, utilize a bracket (14) (P/N MS9552–126) at the center location on the combustion case. Torque bolts 75–85 lb. in. Lockwire (0.032 in.). (QA)

d. Attach receptacle (3) to firewall with screws (6), washers (5) and nuts (4). Torque nuts 8–10 lb. in. (QA)

NOTE

Ensure that the red line on the electrical connector coupling ring is covered from sight.

e. Connect electrical connector (1) to receptacle (3) on the front side of the spray shield baffle (7). Rotate clockwise to tighten. (QA)

INTERMEDIATE MAINTENANCE

MAINTENANCE

SPEED SENSITIVE VALVE ASSEMBLY

Reference Material

None

Alphabetical Index

Subject	Page No.
Installation	2
Removal	2

Record of Applicable Technical Directives

None

1. **REMOVAL**.

a. Disconnect air hoses (19 and 20, figure 1) to speed sensitive valve (18).

b. Remove nuts (17) and washers (16). Remove speed sensitive valve assembly and gasket (15) from accessory drive housing. Discard gasket.

c. Replace parts which are damaged or cracked.

2. **INSTALLATION.**

Materials Required

Specification No./Part No.	Nomenclature
MIL–PRF–23699	Oil, lubricating
Permatex 1372 or Loctite 30588	Compound Sealing
MIL–PRF–6081, grade 1010	Oil, lubricating
MIL-PRF-680, Type II	Solvent, cleaning
6784592	Gasket

Dry Cleaning Solvent MIL–PRF–680, Type II **3**

a. Be sure that mating surfaces of the speed sensitive valve and accessory drive mounting pad are clean, using MIL–PRF–680, Type II.

CAUTION

Avoid excessive amount of sealant that will squeeze out into the inner chamber and contaminate the oil system.

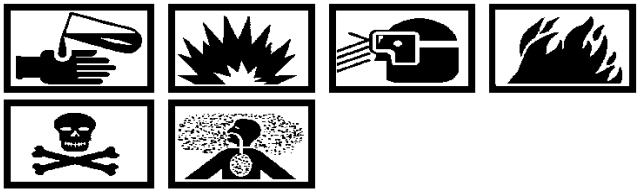

Sealing Compound Permatex No. 1372 or Loctite 30558 **34**

b. Apply a thin film of Permatex No. 1372 or Loctite 30588 to both sides of gasket.

c. Place gasket on studs of mounting pad on accessory drive housing.

Lubricating Oil, MIL–PRF–6081, (Grade 1010) **7**

d. Apply MIL–PRF–6081, grade 1010 oil, to speed sensitive valve (18) fittings.

Lubricating Oil, MIL–PRF–23699 **2**

e. Apply MIL–PRF–23699 oil to shaftgear (11).

NOTE

After tightening to torque limits, wait ten minutes and retighten to limits. Repeat this wait period–retighten cycle as often as necessary until at least 95 percent of the torque limit is maintained at the last cycle check.

f. Secure speed sensitive valve and gasket to accessory housing with nuts (17) and washers (16). Torque to 74–89 lb in. (QA)

g. Install air hose (19) to speed sensitive valve. Torque to 150–200 lb in. (QA)

h. Install air hose (20) to speed sensitive valve. Torque to 200–250 lb in. (QA)

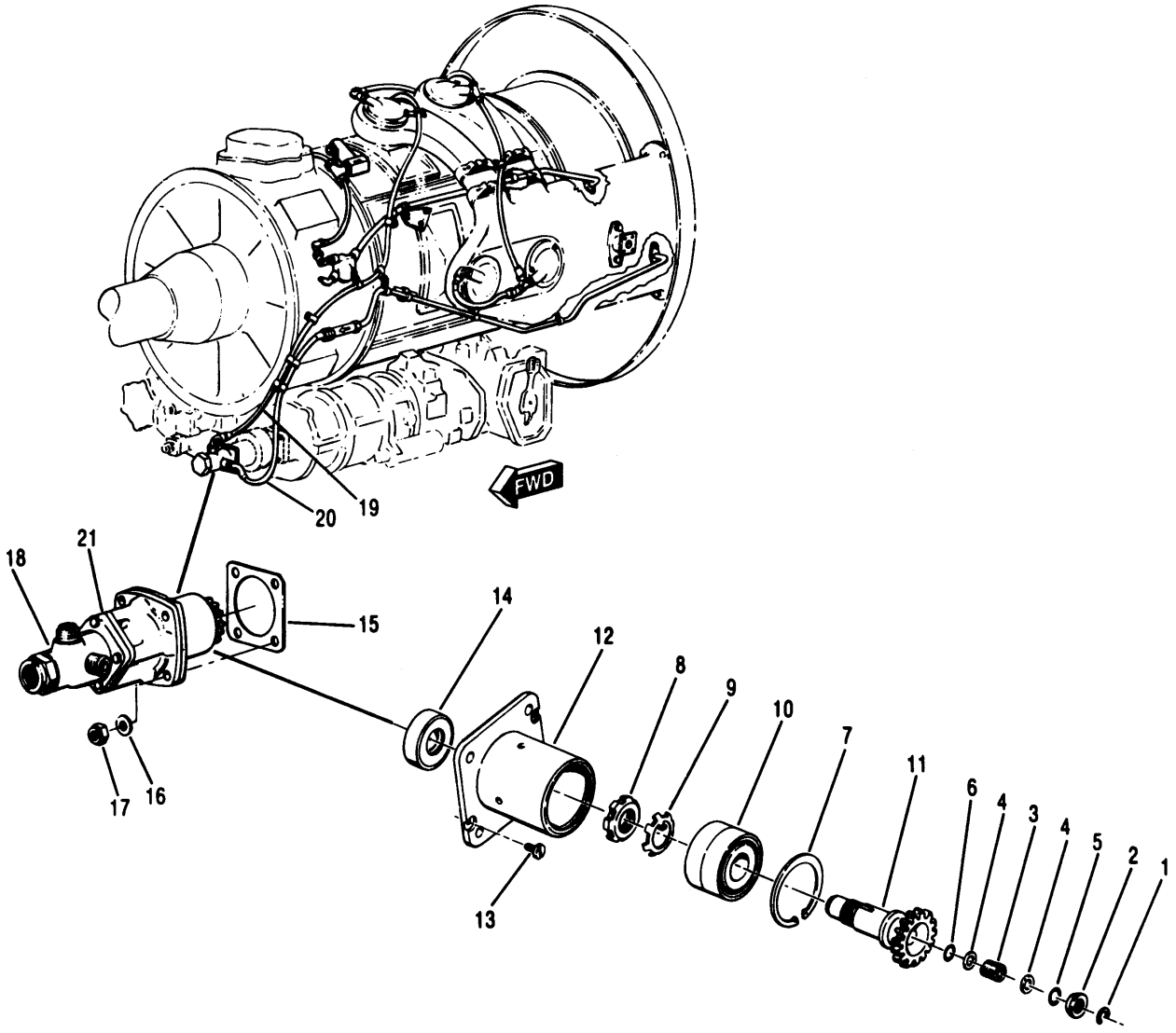

1. Retaining Ring
2. Snapring Guard
3. Spring
4. Washer
5. Preformed Packing
6. Preformed Packing
7. Retaining Ring
8. Nut
9. Washer
10. Bearing
11. Shaftgear
12. Bearing Cage
13. Screw
14. Oil Seal
15. Gasket
16. Washer
17. Nut
18. Speed Sensitive Valve
19. Air Hose
20. Air Hose
21. Flyweight Housing

Figure 1. Speed Sensitive Valve Details

INTERMEDIATE MAINTENANCE

MAINTENANCE

COMPRESSOR BLEED AIR VALVE ASSEMBLY

Reference Material

External Tubing, Cabling, and Clamping Supplement Manual . . . . . NAVAIR 02B–5DG–6–1–1

Alphabetical Index

Subject	Page No.
Assembly	3
Cleaning	2
Disassembly	2
Inspection, Repair and Replacement	2
Installation	3
Removal	2
Repair	2

Record of Applicable Technical Directives

None

1. **REMOVAL**.

a. Disconnect air lines at bleed air valve. (Refer to NAVAIR 02B–5DG–6–1–1.

b. Remove nuts (1, figure 1), washers (2) and standoff brackets.

c. Remove bolt (3) and washer (4).

d. Remove bleed air valve (5).

e. Remove fittings necessary for installation of replacement bleed air valve.

2. **CLEANING**.

Materials Required

Specification No./Part No.	Nomenclature
MIL-PRF-680, Type II	Solvent, cleaning

Dry Cleaning Solvent
MIL–PRF–680, Type II **3**

a. Clean exterior of bleed air valves with MIL–PRF–680, Type II cleaning solvent.

3. **DISASSEMBLY**.

a. Remove parts using figure 2 as a guide.

4. **INSPECTION, REPAIR AND REPLACEMENT.**

Materials Required

Specification No./Part No.	Nomenclature
MIL–C–5541 Class 1A	Coating, Chemical Conversion
NS165	Compound, Anti–seize (Never Seez)

a. Replace Teflon piston rings (6, figure 2) and expanders (5).

Chemical Conversion Coating
MIL–C–5541 **29**

b. Nicks, dents, scratches, etc., that do not exceed 0.020 in. in depth may be smoothed out and treated with MIL–C–5541.

c. Repair any damage to seat retainer (3) which prevents 100% surface contact with compressor case manifold by lapping entire surface on a flat plate. Treat lapped surface with MIL–C–5541.

d. Pitting and wear not exceeding 0.030 in. in depth and not in area of bolt holes is allowed in outside diameter of housing. Treat repaired area with MIL–C–5541.

e. Smooth out one area of shallow wear 0.002 in. deep and less than 1.000 in. in circumferencial length on inside diameter of housing. Treat repaired area with MIL–C–5541.

f. Inside diameter of housing is 2.502 in. maximum.

Anti–seize Compound (Never Seez) NS165 **32**

g. Apply NS165 to the mating flange and outside diameter of housing.

5. **ASSEMBLY**

CAUTION

Do not stretch expanders during installation.

NOTE

Use figure 2 as a guide to reassemble bleed valves.

a. Place expanders (5, figure 2) in grooves of piston and lock ends together.

b. Assemble piston rings (6) in each groove with ring gaps 180 –160° apart, also gaps of rings located at 70 –100° from cut ends of expander.

6. **INSTALLATION**.

Support Equipment Required

Part No./Type Designation	Nomenclature
6797963	Probe, compressor bleed air valve piston

Materials Required

Specification No./Part No.	Nomenclature
NS165	Compound, Anti–seize (Never Seez)

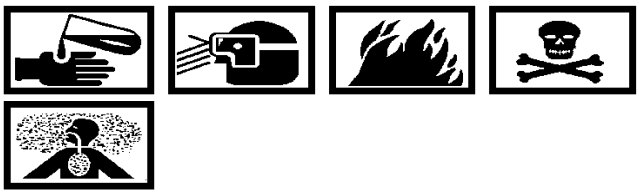

Anti–seize Compound (Never Seez) NS165 32

a. Apply NS165 to bolt, studs, and base fitting threads.

b. Install bleed air valve (5, figure 1) in the open position.

c. Install bleed air valve in bleed air collector. Secure with washers (2) and nuts (1). Torque nuts to 74–89 lb in. (QA)

NOTE

Bolt (3, figure 1) and washer (4) are installed in left rear valve. See figure 1 for location.

d. Install bolt (3) and washer (4). Torque bolt to 60–65 lb in. (QA)

e. Check bleed air valve after installation with 6797963 compressor bleed air valve piston position probe as follows:

(1) If probe point meets resistance before handle touches face of bleed air valve inlet the piston is in the up (open) position.

(2) If piston is in closed position, install air hose and apply enough vacuum to open bleed air valve.

f. Reconnect air lines at the bleed air valve. (Refer to NAVAIR 02B–5DG–6–1–1.)

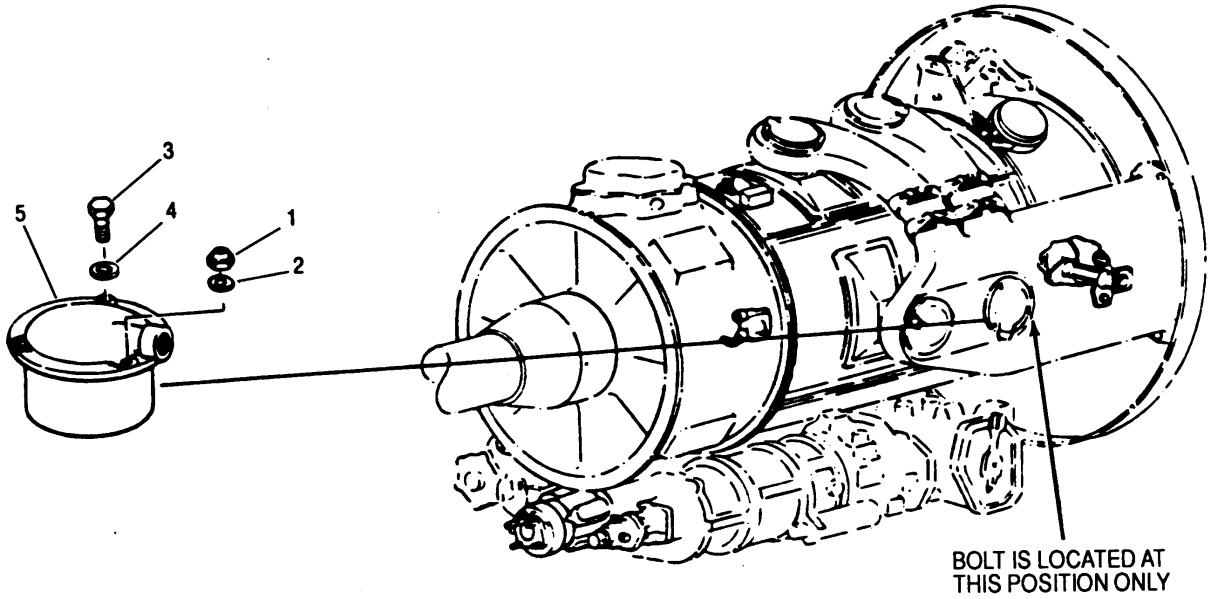

1. Nut
2. Washer
3. Bolt
4. Washer
5. Bleed Air Valve

Figure 1. Bleed Air Valve Details

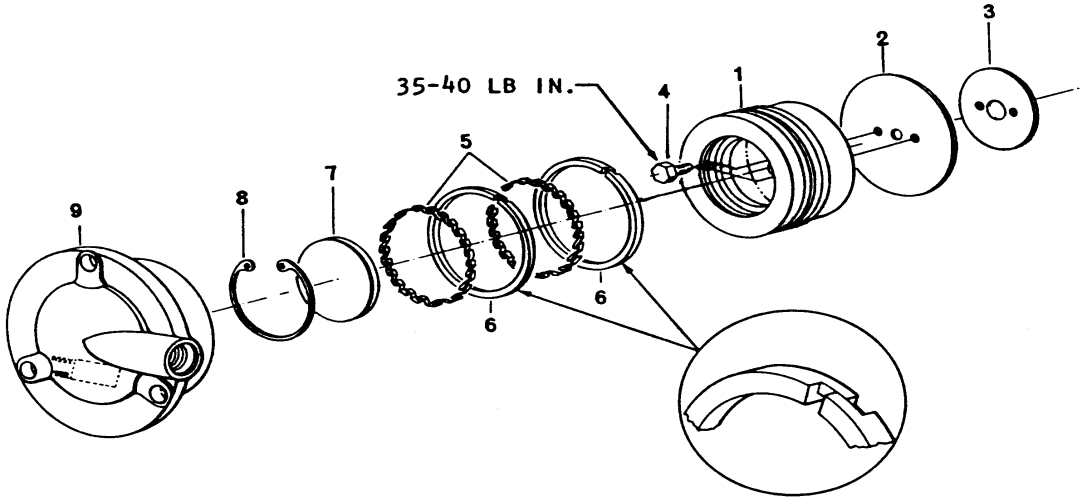

1. Piston
2. Gasket
3. Seat Retainer
4. Bolt
5. Expanders
6. Teflon Piston Ring
7. Disc
8. Retaining Ring
9. Housing

Figure 2. Compressor Bleed Air Valve

INTERMEDIATE MAINTENANCE

MAINTENANCE

COMPRESSOR BLEED AIR FILTER ASSEMBLY

Reference Material

None

Alphabetical Index

Subject	Page No.
Assembly	2
Cleaning	2
Disassembly	2
Inspection	2
Installation	3
Removal	2
Repair	2

Record of Applicable Technical Directives

None

1. **REMOVAL**.

a. Remove lockwire, bolt (6, figure 1) and clamp (5) from housing (3).

b. Disconnect air inlet and outlet line from bleed air filter (4).

2. **DISASSEMBLY**.

a. Remove housing from element assembly (1).

b. Remove seal (2) from element assembly.

3. **CLEANING**.

Materials Required

Specification No./Part No.	Nomenclature
MIL–B–43871	Brush, soft bristle
MIL-PRF-680, Type II	Solvent, cleaning

a. Ultrasonic cleaning of disk–type and pleated element filters is not recommended. Replace the element.

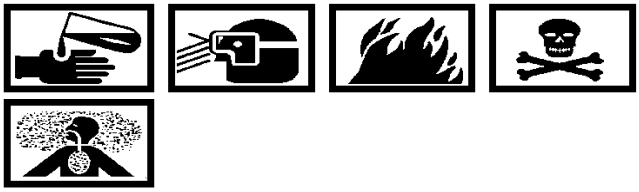

Dry Cleaning Solvent
MIL–PRF–680, Type II **3**

b. Use a soft bristle brush and wash filter in MIL–PRF–680, Type II cleaning solvent.

WARNING

Use approved goggles or faceshield when using compressed air for cleaning, cooling or drying. Air pressure shall not exceed 30 psig. Compressed air shall not be directed towards self or other persons.

CAUTION

Do not use cloth to dry element assembly as lint may get into speed sensitive valve when bleed air filter is installed on engine.

c. Dry element assembly by directing low–pressure air from the inside to the outside.

4. **INSPECTION**.

a. Inspect the filter for damage. If damaged, replace filter.

5. **REPAIR**.

a. Replace unserviceable bleed air filters.

6. **ASSEMBLY**.

Support Equipment Required

Part No./Type Designation	Nomenclature
–––	Wrench, torque (0–500 lb in.)

Materials Required

Specification No./Part No.	Nomenclature
SAE–AMS–M–7866	Molybdenum Disulfide
MIL–PRF–23699	Oil Lubricating
MS20995C32	Lockwire, 0.032 inch
12100CL8	Seal

a. Install new seal (2, figure 1) on element assembly (1).

CAUTION

Use extreme care to prevent lubricating oil from entering bleed air filter and lines.

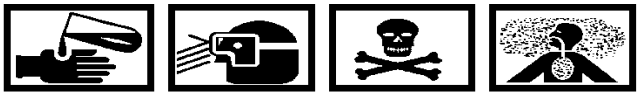

Molybdenum Disulfide Lubricant
SAE–AMS–M–7866 **19**

Lubricating Oil, MIL–PRF–23699 2

b. Apply mixture of SAE–AMS–M–7866 and MIL–PRF–23699 on element assembly threads and install housing (3) on element assembly. Torque housing to 300–360 lb in. Lockwire. (QA)

c. Test bleed air filter after assembly as follows: Apply 78 to 82 psi air pressure to inlet side of bleed air filter and outlet side regulated to obtain a flow of 25 cfm (1.9 lb per min) of air at standard room temperature. Pressure drop across bleed air filter must be no greater than 4.5 psi.

7. **INSTALLATION**.

Support Equipment Required

Part No./Type Designation	Nomenclature
–––	Wrench, torque (0–150 lb in.)

Materials Required

Specification No./Part No.	Nomenclature
SAE–AMS–M–7866	Molybdenum Disulfide
MIL–PRF–23699	Oil Lubricating
MS20995C32	Lockwire, 0.032 inch

CAUTION

Use extreme care to prevent lubricating oil from entering bleed air filter and lines.

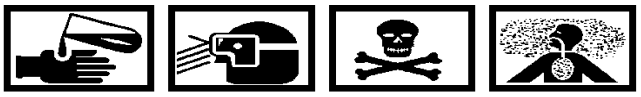

Molybdenum Disulfide Lubricant SAE–AMS–M–7866 19

Lubricating Oil, MIL–PRF–23699 2

a. Apply mixture of SAE–AMS–M–7866 and MIL–PRF–23699 to bleed air filter threads.

CAUTION

Bleed air filter is installed with flow arrow pointing forward. (QA)

b. Install clamp (5, figure 1) to housing (3) of bleed air filter.

c. Install bleed air filter onto flange of compressor bleed air temperature probe housing, using bolt (6). Torque to 70–85 lb in. Lockwire. (QA)

d. Connect air inlet and outlet lines to bleed air filter. Torque fittings to 80–120 lb in. (QA)

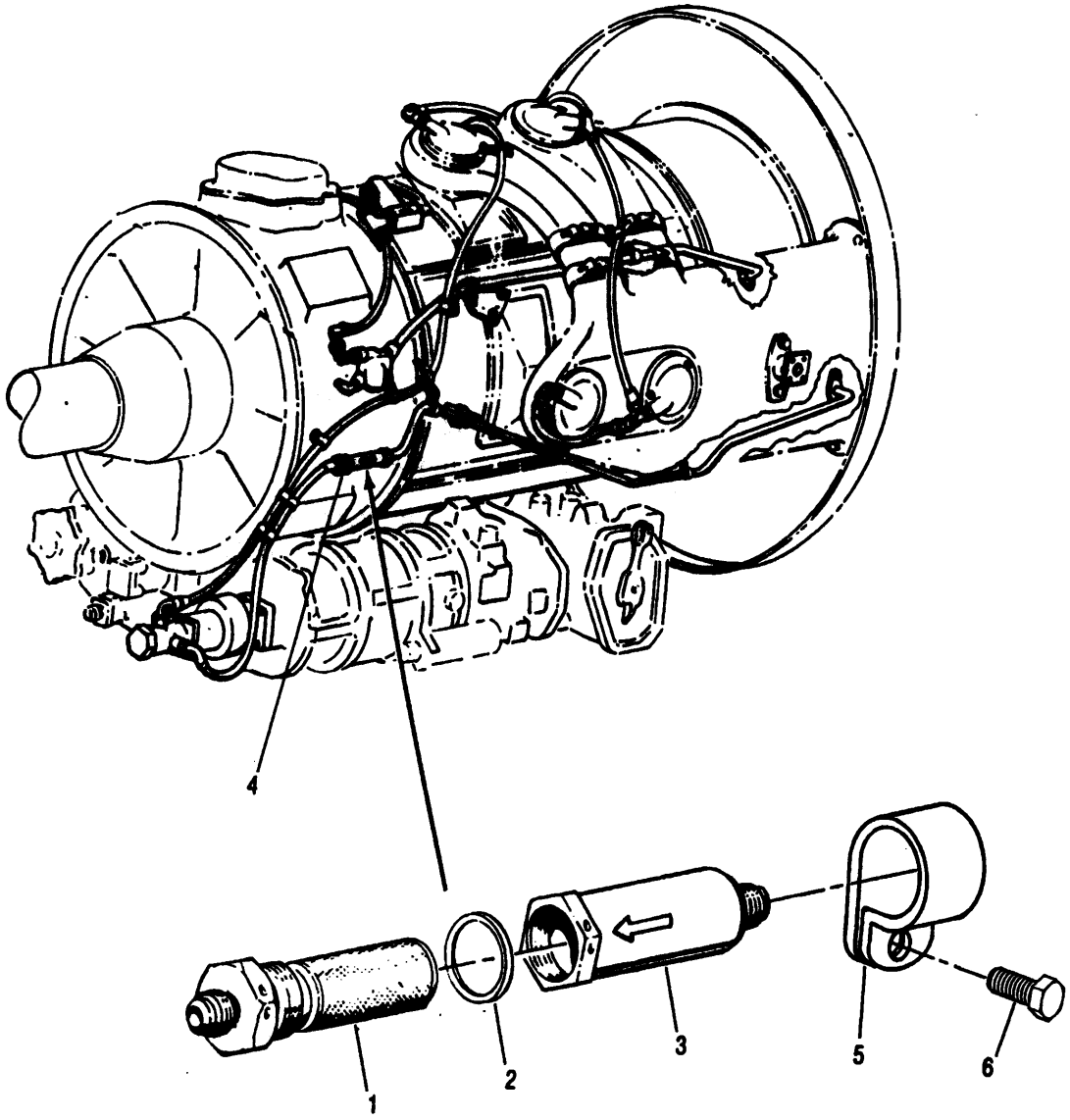

1. Element Assembly
2. Seal
3. Housing
4. Bleed Air Filter
5. Clamp
6. Bolt

Figure 1. Compressor Air Bleed Filter Details

INTERMEDIATE MAINTENANCE

MAINTENANCE

ANTI–ICING SOLENOID VALVE ASSEMBLY

Reference Material

None

Alphabetical Index

Subject	Page No.
Cleaning	2
Inspection	2
Installation	2
Removal	2
Repair	2

Record of Applicable Technical Directives

None

1. **REMOVAL**.

a. Remove lockwire and disconnect electrical connector (1, figure 1).

b. Disconnect anti–icing lines (2 and 3) from tee (4).

c. Remove bolts (5) securing anti–icing solenoid valve (7) to bracket (6). Remove anti–icing solenoid valve.

d. Loosen nut (8) and remove tee and preformed packing (9). Discard preformed packing.

e. Remove lockwire and remove plug (10).

2. **CLEANING**.

Materials Required

Specification No./Part No.	Nomenclature
MIL-PRF-680, Type II	Solvent, cleaning

Dry Cleaning Solvent MIL–PRF–680, Type II **3**

a. Clean anti–icing solenoid valve and bracket with MIL–PRF–680, Type II cleaning solvent.

3. **INSPECTION**.

a. Inspect anti–icing solenoid valve and bracket for damage and cracks.

4. **REPAIR**.

a. Replace anti–icing solenoid valve or bracket which is cracked or damaged.

5. **INSTALLATION**.

Materials Required

Specification No./Part No.	Nomenclature
6843332–04	Packing, performed
MIL–PRF–6081, grade 1010	Oil, lubricating
MS20995C20	Lockwire, 0.020 inch
MS20995C32	Lockwire, 0.032 inch

Lubricating Oil, MIL–PRF–6081, (Grade 1010) **7**

a. Apply a light coat of MIL–PRF–6081, grade 1010 lubricating oil, to tee (4, figure 1) and plug (10) threads and new preformed packing (9).

b. Install preformed packing and nut (8) on tee. Install tee in anti–icing solenoid valve (7) inlet port. Torque nut to 55–80 lb in. (QA)

c. Install plug in anti–icing solenoid valve outlet port. Torque to 40–65 lb in. Lockwire (0.032 inch). (QA)

NOTE

Arrow on anti–icing solenoid valve housing points toward outlet port.

d. Position anti–icing solenoid valve on bracket (6) and secure with bolts (5). Torque bolts to 70–85 lb in. (QA)

e. Install anti–icing lines (2 and 3) on tee (4). Torque fittings to 80–120 lb in. (QA)

f. Connect electrical connector (1) and torque to 50–70 lb in. Lockwire (0.020 inch). (QA)

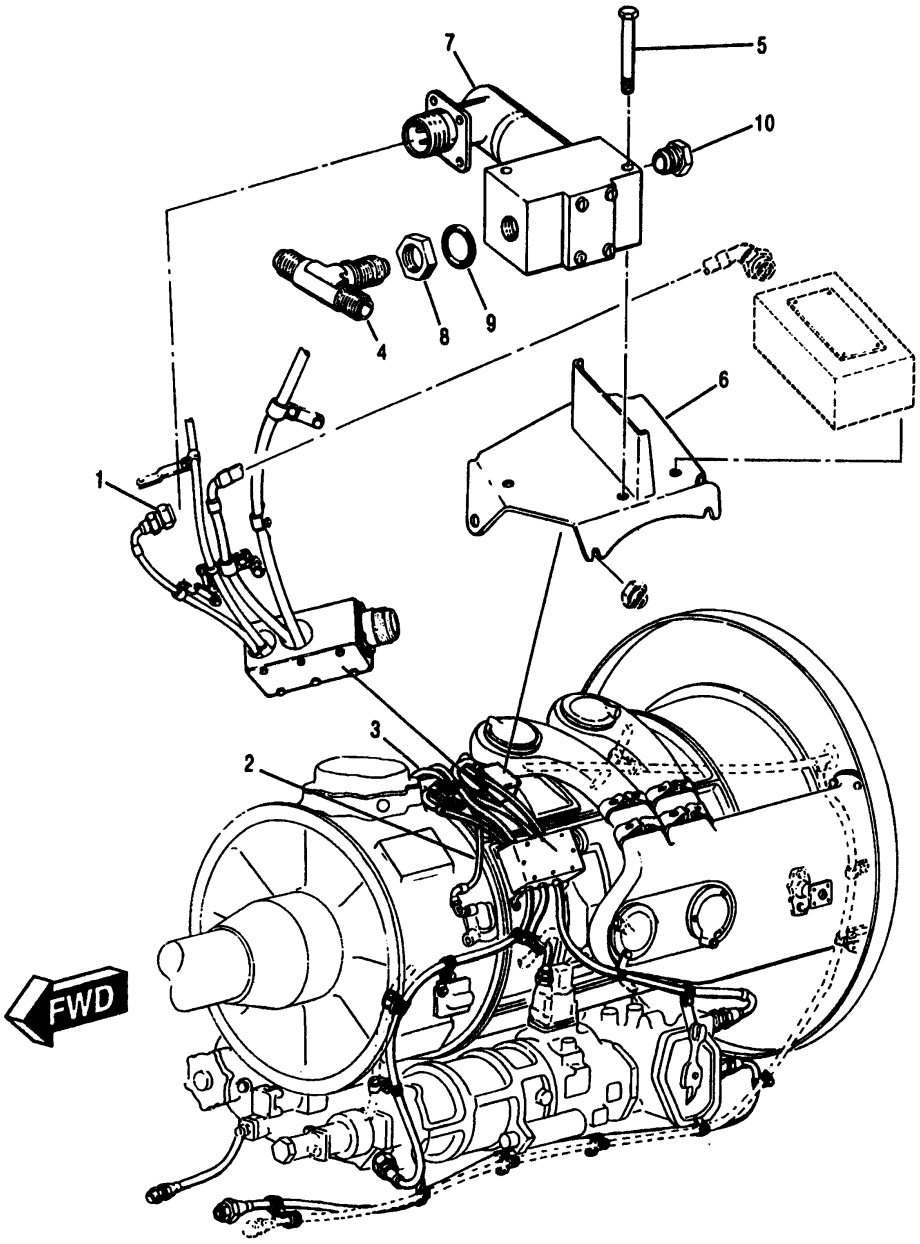

1. Electrical Connector
2. Anti–icing Line
3. Anti–icing Line
4. Tee
5. Bolt
6. Bracket
7. Valve, Anti–icing Solenoid
8. Nut
9. Preformed Packing
10. Plug

Figure 1. Anti–icing Solenoid Valve Details

INTERMEDIATE MAINTENANCE

REMOVAL AND INSTALLATION

ANTI–ICING AIR VALVE ASSEMBLY

Reference Material

None

Alphabetical Index

Subject	Page No.
Assembly	2
Cleaning	2
Disassembly	2
Inspection	2
Installation	4
Removal	2
Repair	2

Record of Applicable Technical Directives

None

1. **REMOVAL.**

NOTE

The anti–icing valves on both the left and right side of the engine are removed and installed using the same procedure.

a. Disconnect flexible air line (1, figure 1) from the anti–icing valve (2).

b. Remove bolts (3) and (4).

c. Remove anti–icing valve. Disconnect rigid line (5) and piston ring assembly (6). Discard metal gasket (7).

2. **DISASSEMBLY.**

CAUTION

Do not use a vise to hold the anti–icing valve during disassembly. Damage to the anti–icing valve may result.

a. Remove nuts (1, figure 2) and cover (2) from valve body (6).

b. Remove spring (4), piston (5), and gasket (3) from valve body. Discard gasket.

3. **CLEANING.**

Materials Required

Specification No./Part No.	Nomenclature
A–A–1206	Cloth, abrasive (crocus)
MIL-PRF-680, Type II	Solvent, cleaning

Dry Cleaning Solvent MIL–PRF–680, Type II **3**

a. Clean all parts with MIL–PRF–680, Type II cleaning solvent.

b. Polish piston and valve body cylinder with A–A–1206 crocus cloth.

c. Clean polished parts in cleaning solvent.

4. **INSPECTION.**

Support Equipment Required

Part No./Type Designation	Nomenclature
0–1 inch	Micrometer

a. Inspect components for corrosion, pitting, scoring, or wear that could cause leakage.

b. Perform piston and valve body measurements. Measure piston and valve body at three points, each point should be approximately 120 degrees apart.

(1) Use a micrometer to measure piston (5, figure 2) outside diameters. Outside diameter should measure 0.9663 inch maximum, 0.9658 inch minimum. Reject piston if out of tolerance.

(2) Use a micrometer to measure valve body (6) inside diameters. Inside diameter should be 0.9693 inch maximum, 0.9683 inch minimum.

5. **REPAIR.**

a. Anti–icing valve parts are non serviceable, and must be replaced when inspection is unsatisfactory.

6. **ASSEMBLY.**

Materials Required

Specification No./Part No.	Nomenclature
MIL–A–907	Compound, anti–seize
23008227	Gasket

Antiseize Thread Compound MIL–A–907 **35**

a. Lubricate threads that mount cover (2, figure 2) with MIL–A–907 anti–seize compound.

b. Install piston (5) and spring (4) in valve body (6).

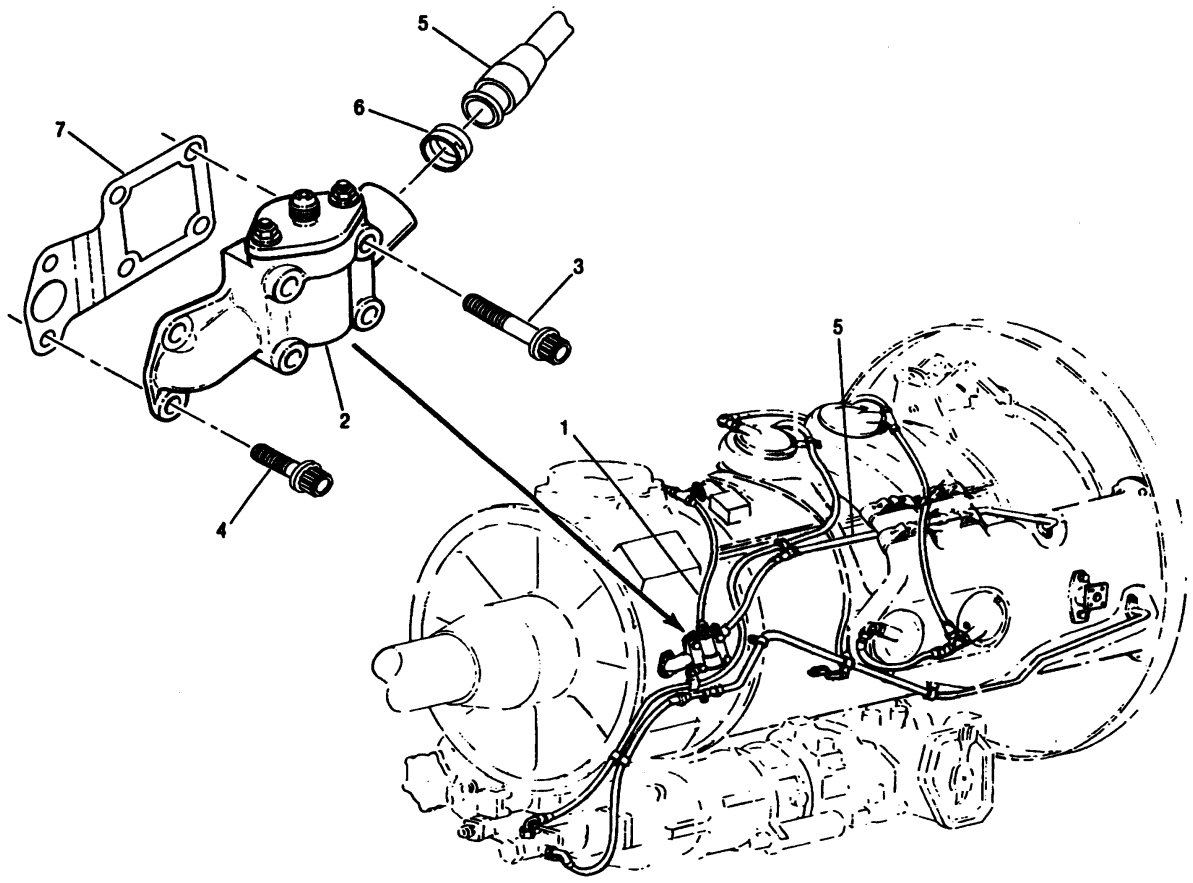

NOTE

THERE ARE TWO ANTI-ICING AIR VALVES. TO MOUNT, USE EIGHT 1/4-28 X 1.688 IN. AND FOUR 1/4-28 X 0.688 IN. BOLTS. USE THE SHORTER BOLTS IN THE FORWARD MOUNTING HOLES ON EACH VALVE.

1. Line, flexible air
2. Body, anti-icing valve
3. Bolt (6)
4. Bolt
5. Line, rigid
6. Assembly, piston ring
7. Gasket, metal

Figure 1. Compressor Air Bleed and Anti-icing System Installation

c. Install gasket (3) on cover (2) and cover on valve body. Secure with nuts (1). Torque nuts to 37–42 lb in. (QA)

7. **INSTALLATION.**

Support Equipment Required

Part No./Type Designation	Nomenclature
––	Wrench, torque (0–100 lb in.)
––	Wrench, torque (0–150 lb in.)

Materials Required

Specification No./Part No.	Nomenclature
23008235	Metal Gasket

a. Install piston ring assembly (6, figure 1) on rigid line (5) and connect rigid line to valve body (4).

b. Position gasket (7) on valve body and secure valve body to air inlet housing with bolts (3 and 4). Torque bolts to 40–60 lb in. (QA)

c. Connect flexible line (1) to the valve and torque to 80–120 lb in. (QA)

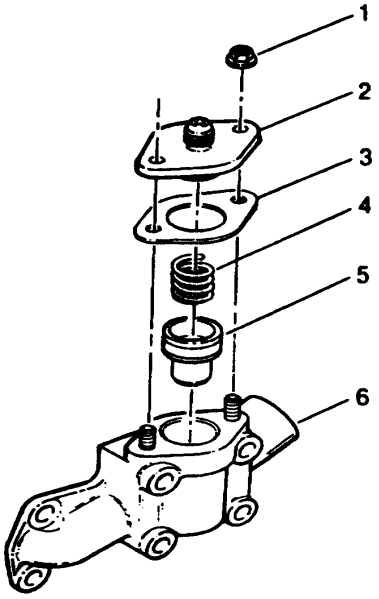

1. Nut
2. Cover
3. Gasket
4. Spring
5. Piston
6. Valve Body

Figure 2. Anti–icing Air Valve Details

INTERMEDIATE MAINTENANCE

MAINTENANCE

ANTI–ICING AIR TUBES ASSEMBLY

Reference Material

None

Alphabetical Index

Subject	Page No.
Cleaning	2
Inspection	2
Installation	2
Removal	2
Repair	2

Record of Applicable Technical Directives

None

1. **REMOVAL**.

Support Equipment Required

Part No./Type Designation	Nomenclature
6799760	Puller, anti–icing probe tube

CAUTION

Do not disconnect flexible temperature sensing line from temperature sensing probe or from thermostat assembly. Do not remove thermostat assembly from the fuel control body. If any of the above disassembly is performed, fuel control must be returned to overhaul.

When handling fuel control, flexible temperature sensing line bends must have a minimum radius of 1 1/4 inches to prevent damage to capillary tube.

NOTE

If anti–icing tube comes out of air inlet housing with temperature sensing probe, remove anti–icing tube from temperature probe.

a. Disconnect compressor inlet temperature connector from CIT sensor (1, figure 1).

b. Remove bolts (2) and remove CIT sensor.

c. Remove and discard gasket (3).

d. Remove lockwire, bolts (4), washers (5), temperature sensing probe (6) and gasket (7). Discard gasket.

e. Remove anti–icing tube (8) from air inlet housing, using 6799760 anti–icing probe tube assembly puller. (See figure 2.)

f. Remove and discard preformed packing (9) and gasket (10).

2. **CLEANING**.

Materials Required

Specification No./Part No.	Nomenclature
MIL-PRF-680, Type II	Solvent, cleaning

Dry Cleaning Solvent
MIL–PRF–680, Type II **3**

a. Clean tube with MIL–PRF–680, Type II cleaning solvent.

3. **INSPECTION**.

a. Inspect anti–icing tube for wear, cracks, and damage.

4. **REPAIR**.

a. Replace anti–icing tube when inspection limits are exceeded.

5. **INSTALLATION**.

Materials Required

Specification No./Part No.	Nomenclature
AS3085–028	Packing, preformed
MS20995C32	Lockwire
23008249	Gasket
23031075	Gasket
6739831	Gasket

CAUTION

The small end of anti–icing tube must enter the inner diameter of air inlet housing and anti–icing tube flange must seat against the outside of air inlet housing before installing air inlet temperature sensing probe.

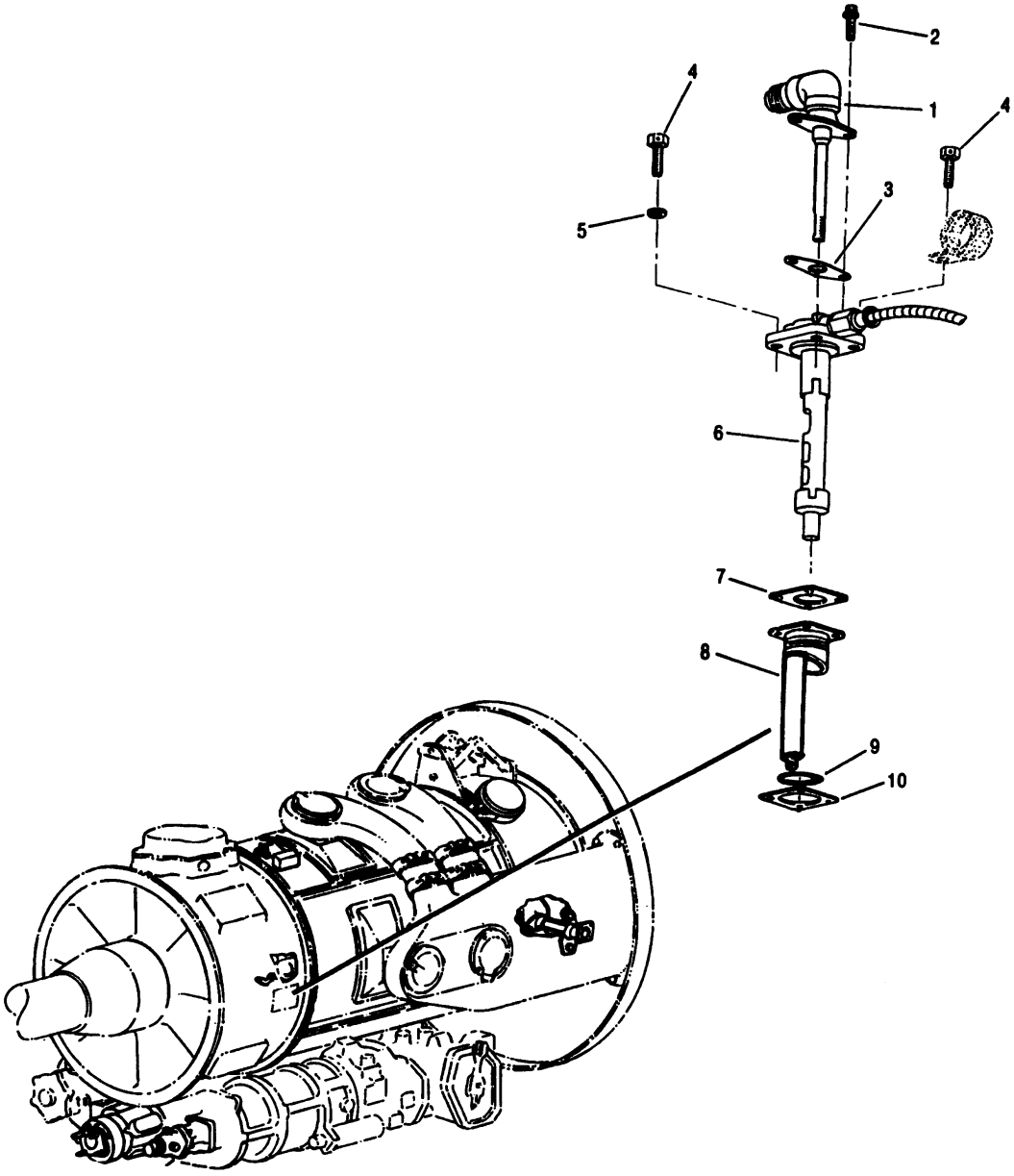

1. CIT–Electronic Sensor
2. Bolt
3. Gasket
4. Bolt
5. Washer
6. Temperature Sensing Probe
7. Gasket
8. Anti–icing Tube
9. Preformed Packing
10. Gasket

Figure 1. Anti–icing Air Tube Details

a. Install new gasket (10, figure 1) and preformed packing (9) on anti–icing tube (8). Insert anti–icing tube into air inlet housing.

b. Install new gasket (7) on temperature sensing probe (6). Insert temperature sensing probe into anti–icing tube.

c. Secure anti–icing tube and temperature sensing probe to air inlet housing with bolts (4) and washers (5). Torque bolts to 70 – 85 lb in. and lockwire bolts in pairs. (QA)

d. Install gasket (3) on CIT sensor (1).

e. Secure CIT sensor with bolts (2). Torque bolts to 35 – 40 lb in. and lockwire. (QA)

f. Connect compressor inlet temperature connector to CIT sensor. Tighten hand tight. (QA)

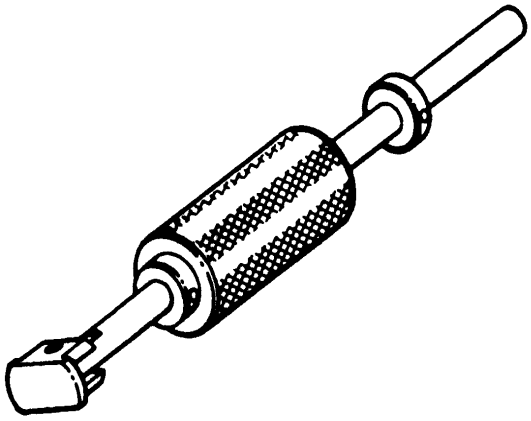

Figure 2. 6799760 Anti–icing Probe Tube Puller

INTERMEDIATE MAINTENANCE

MAINTENANCE

ENGINE MONITORING SYSTEM COMPONENTS

Reference Material

Engine Monitoring System - Description and Principles of Operation . . . . . WP 010 00
Engine Test - Preparation . . . . . WP 022 00
Engine Test - Procedures and Requirements . . . . . WP 023 00
Troubleshooting and Maintenance . . . . . WP 025 00
Torquemeter - Maintenance . . . . . WP 041 00
Coordinator Control - Maintenance . . . . . WP 065 00
Power Section Wiring Harnesses - Removal and Installaiton . . . . . WP 081 00
Thermocouple Assemblies - Maintenance . . . . . WP 083 00
Power Section Thermocouple Harness - Maintenance . . . . . WP 087 00
Anti-Icing Air Tubes - Maintenance . . . . . WP 093 00
T56 Turboprop Engine Test Systems, Operation and Intermediate Maintenance with Illustrated Parts Breakdown . . . . . NAVAIR 17-15AH-28
Turboprop Engine Monitoring System (EMS) Software User's Manual, Organizational and Intermediate Maintenance AE-AGT56-SUM-000

Alphabetical Index

Subject Page No.
Engine Components 4
Compensated Turbine Measured Temperature (CTMT) Components 26
CTMT Components Checkout 27
Compressor Discharge Pressure (CDP) Components 39
CDP Components Checkout 39
CDP Transducer Installation 42
CDP Transducer Removal 42
Combination Total Temperature-Pressure Sensor Installation 45
Combination Total Temperature-Pressure Sensor Removal 42
Compressor Discharge Temperature (CDT) Components 36
CDT Components Checkout 37

Alphabetical Index (cont)

Subject Page No.

Compressor Inlet Pressure (CIP) Components 12
Air Sensing Tip and 90° Reducing Elbow Installation 18
Air Sensing Tip and 90° Reducing Elbow Removal 18
CIP Components Checkout 12
CIP Components Inspection 13
CIP Hose Installation 18
CIP Hose Removal 18
Fuel Control Tee Installation 17
Fuel Control Tee Removal 13
Compressor Inlet Temperature (CIT) Components 4
CIT Components Checkout 7
CIT Sensor Installation 8
CIT Sensor Removal 8
Power Lever Angle (PLA) Components 24
PLA Components Checkout 24
RPM Components 19
RPM Components Checkout 19
Shaft Horsepower (SHP) Components 21
SHP Components Checkout 21
Turbine Exhaust Pressure (PS7) Components 30
PS7 Bulkhead Fitting and Unions Installation 36
PS7 Bulkhead Fitting and Unions Removal 35
PS7 Components Checkout 30
PS7 Components Inspection 30
PS7 Hose Installation 31
PS7 Hose Removal 31
PS7 Tubes Installation 35
PS7 Tubes Removal 35
Vibration Components 46
Compressor Unit Accelerometer Installation 51
Compressor Unit Accelerometer Removal 51
Reduction Gear Unit Accelerometer Installation 51
Reduction Gear Unit Accelerometer Removal 51
Turbine Unit Accelerometer Installation 52
Turbine Unit Accelerometer Removal 51
Vibration Components Checkout 47
Engine Furnished Equipment 52
Digital Electronic Trim Control (DETC) 52
DETC Checkout 56

Alphabetical Index (cont)

Subject Page No.

DETC Installation 58
DETC Removal 58
Engine Analyzer Unit (EAU) 58
Data Media 62
Data Media Indications 62
EAU Battery Installation 81
EAU Battery Removal 81
EAU BIT 62
EAU Checkout 74
EAU Modes of Operation 58
EAU Installation 81
EAU Removal 81
EMS FAULT Flag 62
Initiated BIT 62
MAINT ADVISORY Flag 62
Parameter Exceedance 62
Periodic BIT 62
Power–On BIT 62
Handheld Maintenance Terminal (HMT) 84
HMT Checkout 84
Pilot Record Switch 83
Warning Lamps 83
Weight On Wheels Switch 83
EMS Checkout 86
EMS Real–Time Subsystem Checkout 86
Data Analysis 88
Introduction 4

Record of Applicable Technical Directives

None

1. **INTRODUCTION**.

2. This work package (WP) provides engine monitoring system (EMS) components maintenance procedures. Engine control system components, establishing references for EMS operation, are also covered. Refer to WP 010 00 for EMS description and principles of operation.

3. Component checkout procedures located in this WP form fault isolation subroutines for test preparation, testing, and troubleshooting procedures contained in WPs 022 00, 023 00, and 025 00. The quick engine change unit (QECU) configuration, tested on the turboprop engine test system (TPETS), is covered for proper integrated EMS functions at the intermediate level.

4. The handheld maintenance terminal (HMT) is used to display real–time parameters. Refer to WP 010 00 for an explanation of HMT operating procedures. If the HMT appears to malfunction during use, refer to HMT checkout procedures, paragraph 79, this WP.

5. To confirm proper integrated EMS operation, refer to the EMS checkout procedure, paragraph 80, this WP. Use of this checkout procedure will clear fault registers, reset system variables, and assure proper operation of engine real–time monitoring functions.

6. Individual component checkout procedures start at the TPETS instrumentation and control cab. Simplified schematic diagrams are provided for each checkout procedure.

7. **ENGINE COMPONENTS**.

8. COMPRESSOR INLET TEMPERATURE (CIT) COMPONENTS (figure 1). The CIT sensor samples air temperature at the engine compressor air inlet housing. The resistive signal provided by the sensor is sent through the interconnecting wiring harness to the digital electronic trim control (DETC). The DETC processes the CIT signal and provides the signal to the engine analyzer unit (EAU) through the RS–422 bus. The EAU uses the CIT signal in conjunction with shaft horsepower (SHP) and compressor inlet pressure (CIP) signals to determine take–off–low–power events (table 1).

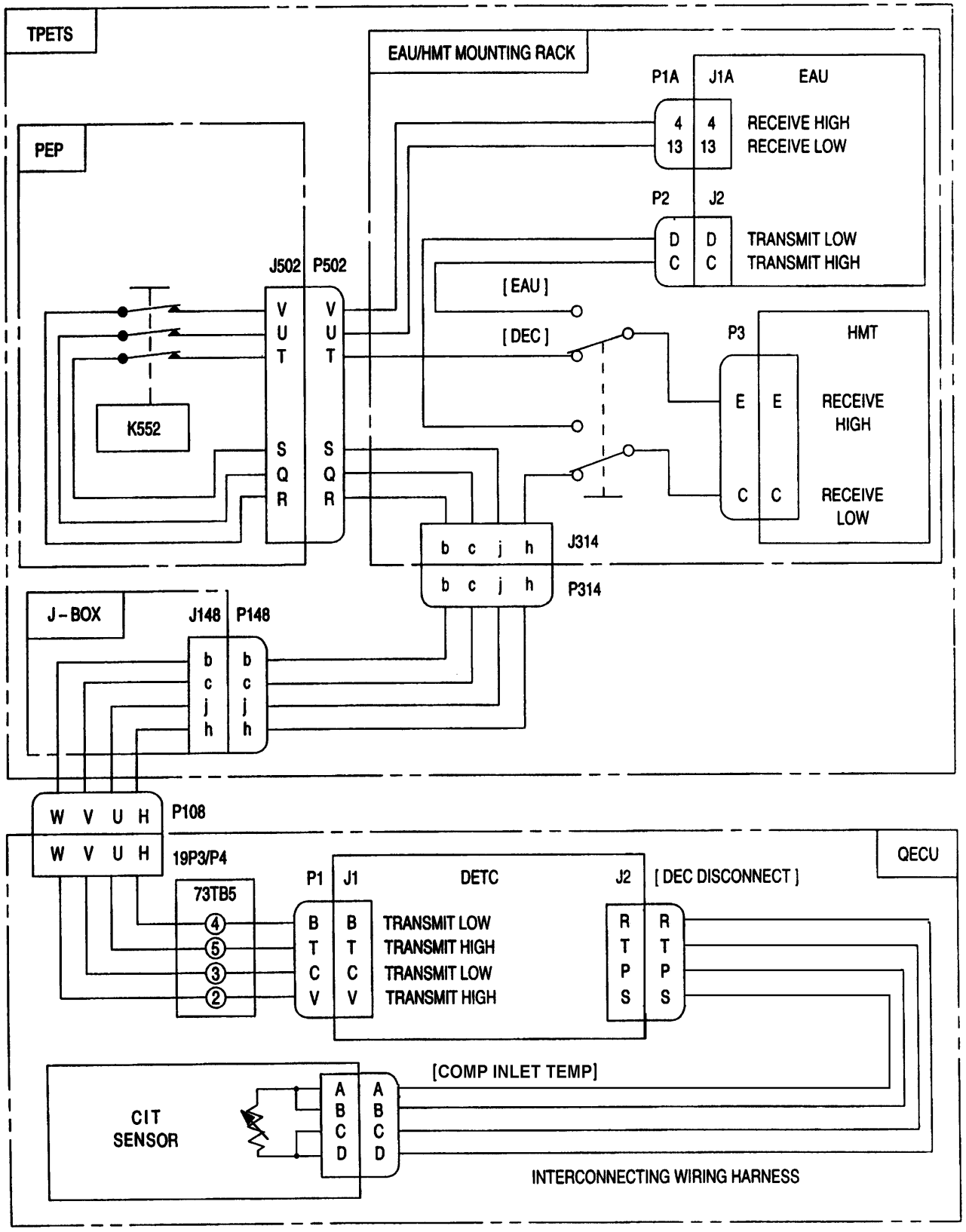

Figure 1. CIT Components Checkout

Table 1. Integrated Exceedance Events

	Long Start	Hot Start	Take–Off Low Power	Bogdown	Surge	Flameout
Time	>64 sec	– –	– –	– –	– –	– –
CTMT	– –	>830°C	– –	– –	(NOTE 1)	(NOTE 2)
TMT	– –	– –	– –	– –	– –	(NOTE 2)
CDT	– –	– –	– –	– –	– –	(NOTE 2)
SHP	– –	– –	(NOTES 3–7)	– –	– –	– –
CIT	– –	– –	(NOTES 4–6)	– –	– –	– –
CIP	– –	– –	(NOTE 5)	– –	(NOTE 8)	– –
PD3L	– –	– –	– –	– –	>10 psia	– –
PS7	– –	– –	– –	– –	(NOTE 8)	– –
CDP	– –	– –	– –	– –	(NOTE 9)	– –
RPM	– –	– –	– –	(NOTE 10)	– –	(NOTE 11)
Mode	(NOTE 12)	(NOTE 13)	(NOTE 14)	(NOTE 15)	(NOTE 15)	(NOTE 16)
L EAU Reason	Word 3 Bit 8	Word 2 Bit 0	Word 3 Bit 0	Word 3 Bit 2	Word 3 Bit 1	Word 3 Bit 4
R EAU Reason	Word 5 Bit 8	Word 4 Bit 0	Word 5 Bit 0	Word 5 Bit 2	Word 5 Bit 1	Word 5 Bit 4

NOTES:

1. If CTMT increases more than 260°C/sec, a surge event will occur.
2. If CTMT is less than 300°C and TMT is greater than CDT, a flameout event will occur.
3. If SHP is less than 4600, a take–off low power event will occur.
4. If SHP is 4600 to 4950 and CIT is less than –11.3°C, a takeoff low power event will occur.
5. If SHP is 4600 to 4950 and CIT is 11.4°C to 36.8°C, a calculation using CIT, CIP, and SHP will determine take–off power status.
6. If SHP is 4600 to 4950 and CIT is greater than 36.8°C, a takeoff low power event will not occur.
7. If SHP is greater than 4950, a take–off low power event will not occur.
8. CIP and PS7 provide the CDPO calculation to enhance the PD3L signal.
9. CDP provides the basic PD3L signal.
10. An engine speed decrease greater than 200 rpm/sec within a range of 1500 to 13,300 rpm will cause a bogdown event.
11. An engine speed decrease greater than 100 rpm/sec within a range of 3000 to 13,000 rpm will cause a flameout event.
12. During start mode (table 5).
13. Conditional, after start mode (table 5) is detected.
14. Conditional, after take–off mode (table 5) is detected.
15. Conditional, after high speed ground idle mode (table 5) is detected.
16. Conditional, after lift–off mode (table 5) is detected.

9. CIT Components Checkout. Yes | No

Support Equipment Required

Part No./Type Designation	Nomenclature
–––	Multimeter, digital

Materials Required

Specification No./Part No.	Nomenclature
MIL-PRF-680, Type II	Solvent, dry cleaning
MIL–C–58043	Cloth, low lint

NOTE

The following steps are performed when support equipment electrical power is applied (except when noted), when the engine is not running, and when engine surfaces are at ambient temperature.

a. Using TPETS thermocouple selector switch, select and display outside air temperature on digital temperature indicator (°F) and go to step b.

b. Using table 2, note closest value (°C) and go to step c.

c. Set EAU/HMT mounting rack EAU/DEC switch to the DEC position and go to step d.

d. Using the handheld maintenance terminal (HMT), display CIT value (°C) and compare with value in step b. Is HMT value within ±2.0 °C of outside air temperature? v | e

e. Remove TPETS electrical power and go to step f.

f. Remove CIT sensor (paragraph 10, this WP) and go to step g.

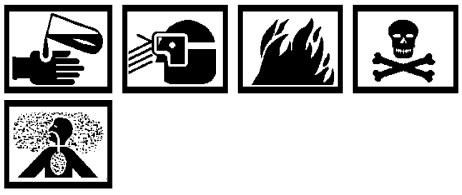

Dry Cleaning Solvent MIL–PRF–680, Type II **3**

Compressed Air **58**

NOTE

Do not immerse hose assembly in any cleaning solvent.

g. Remove hose clamps and disconnect CIT hose assembly from temperature sensing probe and main fuel control assembly.

h. Clean CIT hose assembly externally with a low lint cloth, dampened with dry cleaning solvent.

i. Flush CIT hose assembly with dry cleaning solvent and air dry. If necessary blow out CIT hose assembly using compressed air.

j. Reconnect CIT hose assembly to temperature sensing probe and main fuel control assembly and install hose clamps.

k. Using MIL-PRF-680, Type II dry cleaning solvent, clean CIT sensor air flow inlet, CIT sensor connector, interconnecting wiring harness COMP INLET TEMP connector, and go to step l.

9. CIT Components Checkout. (cont)

		Yes	No
l.	Install CIT sensor (paragraph 11, this WP) and go to step m.		
m.	Apply TPETS electrical power and go to step n.		
n.	Using HMT, display CIT value (°C) and compare with outside air temperature (step a and table 2). Is HMT value within ±2.0°C of outside air temperature?	v	k
o.	Remove TPETS electrical power and go to step p.		
p.	Remove interconnecting wiring harness COMP INLET TEMP connector (1, figure 2) from CIT sensor (2) and go to step q.		
q.	Using a digital multimeter, measure between CIT sensor (2) connector pins A and B. Is resistance less than 2.0 ohms?	n	p
r.	Measure between pins C and D. Is resistance less than 2.0 ohms?	o	p
s.	Measure between pins A and D. Does resistance value compare with outside air temperature (°F of step a) in accordance with table 2?	q	p
t.	Replace CIT sensor (paragraphs 10 and 11, this WP) and repeat from step a.	–	–
u.	Remove interconnecting wiring harness DEC DISCONNECT connector from DETC connector J2 and go to step v.		
v.	Check interconnecting wiring harness continuity (figure 1). Is continuity correct?	t	s
w.	Replace interconnecting wiring harness (WP 107 00) and repeat from step a.	–	–
x.	Replace DETC (paragraphs 57 and 58, this WP) and go to step y.		
y.	Install interconnecting wiring harness COMP INLET TEMP connector (1, figure 2) on CIT sensor (2) connector. Turn connector 360° until it locks into detent and repeat from step a.	–	–
z.	CIT components checkout complete. If processing of CIT signal is to be checked, perform DETC checkout procedures (paragraph 56, this WP).	–	–

10. CIT Sensor Removal.

a. Remove interconnecting wiring harness COMP INLET TEMP connector (1, figure 2) from CIT sensor (2).

b. Remove bolts (3) attaching CIT sensor and gasket (4) to temperature sensing probe.

c. Remove CIT sensor and gasket. Discard gasket.

11. CIT Sensor Installation.

Support Equipment Required

Part No./Type Designation	Nomenclature
–––	Wrench, torque (0–150 lb in.)
0 to 100 inch–pounds	Torque Wrench

Materials Required

Specification No./Part No.	Nomenclature
MS20995NC32	Lockwire
23031075	Gasket

a. Install new gasket (4, figure 2) on CIT sensor (2).

NOTE

To assure proper electrical connection when installed, the CIT electrical connector must face forward.

b. With electrical connector facing forward, install CIT sensor (2) into temperature sensing probe opening at 9 o'clock position on compressor air inlet housing.

c. Install bolts (3) securing CIT sensor to temperature sensing probe. Torque bolts 35–40 inch–pounds and lockwire. (QA)

d. Install interconnecting wiring harness COMP INLET TEMP connector (1) on CIT sensor connector. Turn connector 360° until it locks into detent.

Table 2. CIT Temperature Conversion and Resistance

TPETS Indicator Value (°F)	Temperature Sensor Resistance (ohms)	HMT Value (°C)
–40.0 to –35.0	83.589 to 85.552	–40.0 to –37.2
–35.0 to –30.0	84.700 to 86.673	–37.2 to –34.4
–30.0 to –25.0	85.811 to 87.794	–34.4 to –31.7
–25.0 to –20.0	86.920 to 88.913	–31.7 to –28.9
–20.0 to –15.0	88.029 to 90.032	–28.9 to –26.1
–15.0 to –10.0	89.136 to 91.150	–26.1 to –23.3
–10.0 to – 5.0	90.243 to 92.266	–23.3 to –20.6
– 5.0 to 0.0	91.348 to 93.382	–20.6 to –17.8
0.0 to 5.0	92.452 to 94.496	–17.8 to –15.0
5.0 to 10.0	93.556 to 95.611	–15.0 to –12.2
10.0 to 15.0	94.659 to 96.723	–12.2 to – 9.4
15.0 to 20.0	95.761 to 97.836	– 9.4 to – 6.7
20.0 to 25.0	96.862 to 98.946	– 6.7 to – 3.9
25.0 to 30.0	97.962 to 99.768	– 3.9 to – 1.1
30.0 to 35.0	99.348 to 100.872	– 1.1 to 1.7
35.0 to 40.0	100.452 to 101.975	1.7 to 4.4
40.0 to 45.0	101.555 to 103.076	4.4 to 7.2
45.0 to 50.0	102.656 to 104.177	7.2 to 10.0
50.0 to 55.0	103.757 to 105.276	10.0 to 12.8
55.0 to 60.0	104.856 to 106.375	12.8 to 15.6
60.0 to 65.0	105.955 to 107.473	15.6 to 18.3
65.0 to 70.0	107.053 to 108.570	18.3 to 21.1
70.0 to 75.0	108.150 to 109.666	21.1 to 23.9
75.0 to 80.0	109.246 to 110.761	23.9 to 26.7
80.0 to 85.0	110.341 to 111.855	26.7 to 29.4
85.0 to 90.0	111.435 to 112.949	29.4 to 32.2
90.0 to 95.0	112.529 to 114.041	32.2 to 35.0
95.0 to 100.0	113.621 to 115.132	35.0 to 37.8
100.0 to 105.0	114.712 to 116.222	37.8 to 40.6
105.0 to 110.0	115.802 to 117.312	40.6 to 43.3
110.0 to 115.0	116.892 to 118.400	43.3 to 46.1
115.0 to 120.0	117.980 to 119.488	46.1 to 48.9
120.0 to 125.0	119.068 to 120.575	48.9 to 51.7
125.0 to 130.0	120.115 to 121.661	51.7 to 54.4
130.0 to 135.0	121.241 to 122.745	54.4 to 57.2
135.0 to 140.0	122.325 to 144.619	57.2 to 60.0

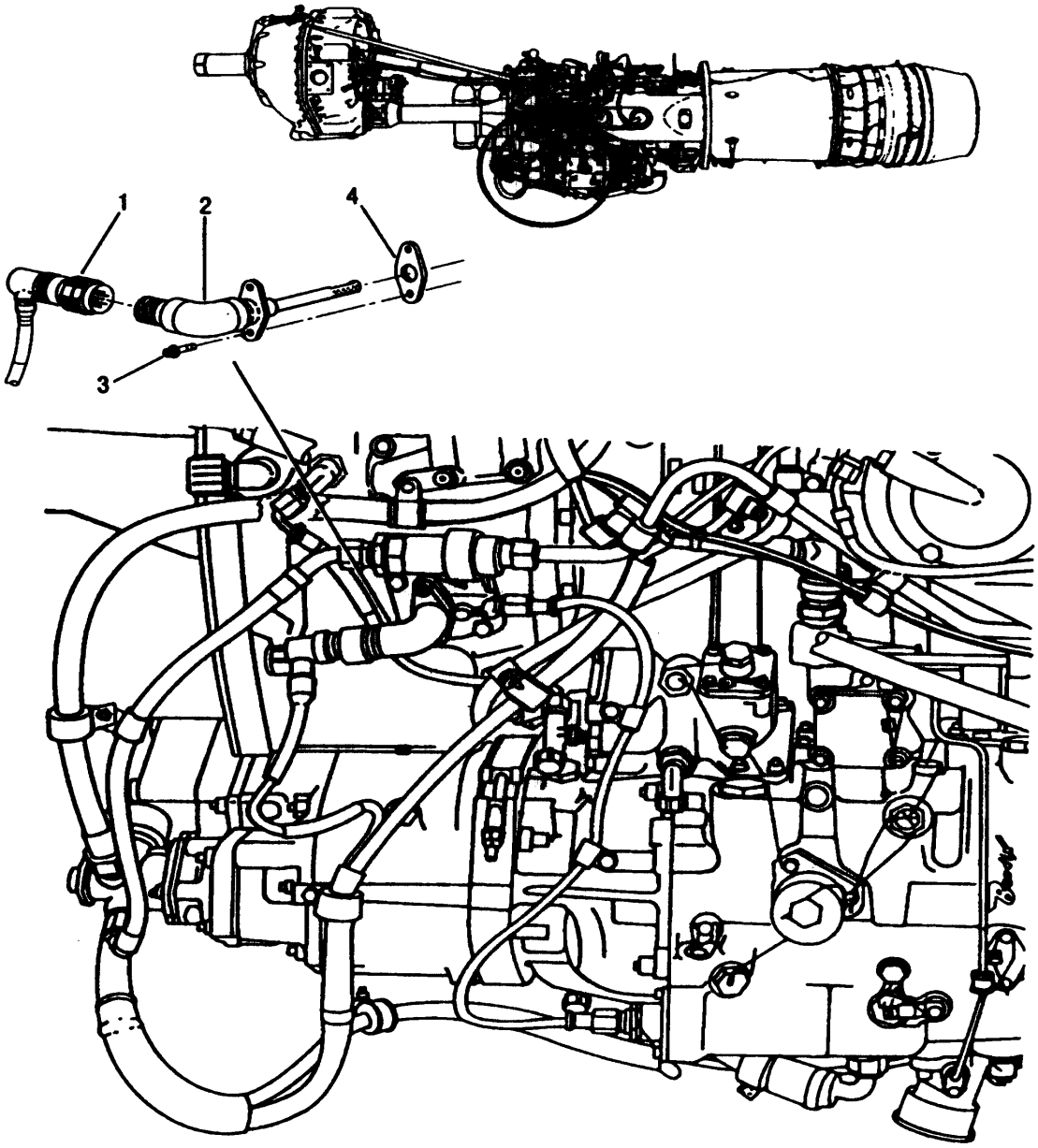

1. COMP INLET TEMP Connector
2. CIT Sensor
3. Bolts
4. Gasket

Figure 2. CIT Sensor Replacement

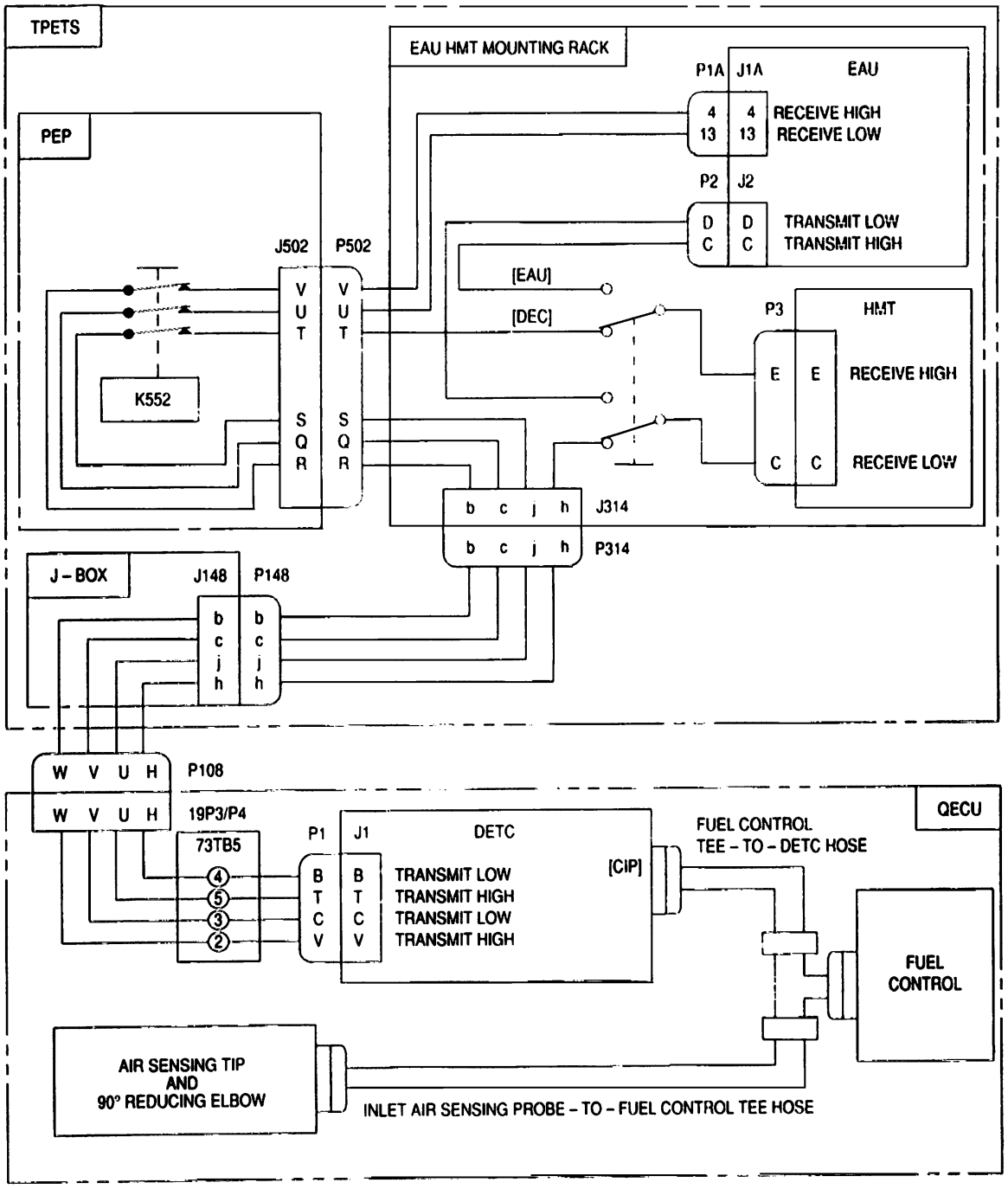

Figure 3. CIP Components Checkout

Table 3. Air Pressure Conversion

Pressure (in. Hg)	Pressure (psia)	Pressure (in. Hg)	Pressure (psia)	Pressure (in. Hg)	Pressure (psia)	Pressure (in. Hg)	Pressure (psia)
24.43	12.0	27.49	13.5	30.54	15.0	33.59	16.5
24.64	12.1	27.69	13.6	30.74	15.1	33.80	16.6
24.84	12.2	27.89	13.7	30.95	15.2	34.00	16.7
25.04	12.3	28.01	13.8	31.15	15.3	34.21	16.8
25.25	12.4	28.30	13.9	31.35	15.4	34.41	16.9
25.45	12.5	28.50	14.0	31.56	15.5	34.61	17.0
25.65	12.6	28.71	14.1	31.76	15.6	34.82	17.1
25.86	12.7	28.91	14.2	31.97	15.7	35.02	17.2
26.06	12.8	29.11	14.3	32.17	15.8	35.22	17.3
26.26	12.9	29.32	14.4	32.37	15.9	35.43	17.4
26.47	13.0	29.52	14.5	32.58	16.0	35.63	17.5
26.67	13.1	29.73	14.6	32.78	16.1	35.83	17.6
26.88	13.2	29.93	14.7	32.98	16.2	36.04	17.7
27.08	13.3	30.13	14.8	33.19	16.3	36.24	17.8
27.28	13.4	30.34	14.9	33.39	16.4	36.44	17.9

12. COMPRESSOR INLET PRESSURE (CIP) COMPONENTS (figure 3). The CIP air sensing tip samples air pressure at the engine compressor air inlet housing 9 o'clock strut. Air pressure provided at the air sensing tip is sent through the 90° reducing elbow fitting to the fuel control tee fitting by the inlet air sensing probe–to–fuel control tee hose. At the tee fitting, air pressure is sensed by the fuel control bellows. This provides an air pressure factor for fuel metering. The fuel control tee–to–DETC hose sends the air pressure to the DETC CIP fitting. A pressure transducer within the DETC converts the air pressure to an electronic CIP signal. The DETC processes the CIP signal and provides the signal to the EAU through the RS–422 bus. The EAU uses the CIP signal in conjunction with SHP and CIT signals to determine take–off–low–power events (table 1).

13. CIP Components Checkout.

	Yes	No
NOTE The following steps are performed when support equipment electrical power is applied and when the engine is not running.		
a. Using TPETS selector valve, select OUTSIDE BARO PRESS to display outside air pressure (in. Hg) and go to step b.		
b. Using table 3, note closest value (psia) and go to step c.		
c. Set EAU/HMT mounting rack EAU/DEC switch to the DEC position and go to step d.		
d. Using the HMT, display CIP value (psia) and compare with value noted in step b. Is CIP value within +/–0.7 psia of outside air pressure?	g	e
e. Perform CIP components inspection (paragraph 14, this WP) and repeat from step a. Is the CIP value correct?	g	f

13. CIP Components Checkout. (cont)

	Yes	No
f. Replace DETC (paragraphs 57 and 58, this WP) and repeat from step a.	–	–
g. CIP components checkout complete. If processing of the CIP signal is to be checked, perform DETC checkout procedures (paragraph 56, this WP).	–	–

14. CIP Components Inspection.

	Yes	No
a. Remove fuel control tee (paragraph 15, this WP) and go to step b.		
b. Remove fuel control tee–to–DETC hose (2, figure 5, sheet 3) from DETC fitting and go to step c.		
c. Remove inlet air sensing probe–to–fuel control tee hose (2, figure 4) from 90° reducing elbow (1) fitting and go to step d.		

CAUTION

Blowing compressed air into the DETC transducer or fuel control bellows may damage the DETC or fuel control.

	Yes	No
d. Using low air pressure, blow into fuel control tee (removed in step a). Is blockage or obstruction indicated by the resistance of air flow?	h	e
e. Blow into fuel control tee–to–DETC hose (removed in step b). Is blockage or obstruction indicated by the resistance of air flow?	i	f
f. Blow into inlet air sensing probe–to–fuel control tee hose (removed in step c). Is blockage or obstruction indicated by the resistance of air flow?	j	g
g. Blow into 90° reducing elbow (1, figure 4). Is blockage or obstruction indicated by the resistance of air flow?	k	l
h. Discard obstructed tee and go to step e.		
i. Discard obstructed hose and go to step f.		
j. Discard obstructed hose and go to step g.		
k. Remove air sensing tip and 90° reducing elbow (paragraph 19, this WP) and go to step l.		
l. Discard obstructed air sensing tip or obstructed 90° reducing elbow and go to step m.		
m. Install or replace air sensing tip or 90° reducing elbow (paragraph 20, this WP) and go to step n.		
n. Install fuel control tee (paragraph 16, this WP) and go to step o.		
o. Install fuel control tee–to–DETC hose (paragraph 18, this WP) and go to step p.		
p. Install inlet air sensing probe–to–fuel control tee hose (paragraph 18, this WP) and go to step q.		
q. CIP components inspection complete.	–	–

15. Fuel Control Tee Removal.

a. Remove inlet air sensing probe–to–fuel control tee hose (1, figure 5) fitting from fuel control tee (3).

b. Remove fuel control tee–to–DETC hose (2) fitting from fuel control tee.

c. Loosen nut (4) and remove fuel control tee from fuel control housing.

d. Remove and discard preformed packing (5).

e. Remove nut from fuel control tee and retain for installation.

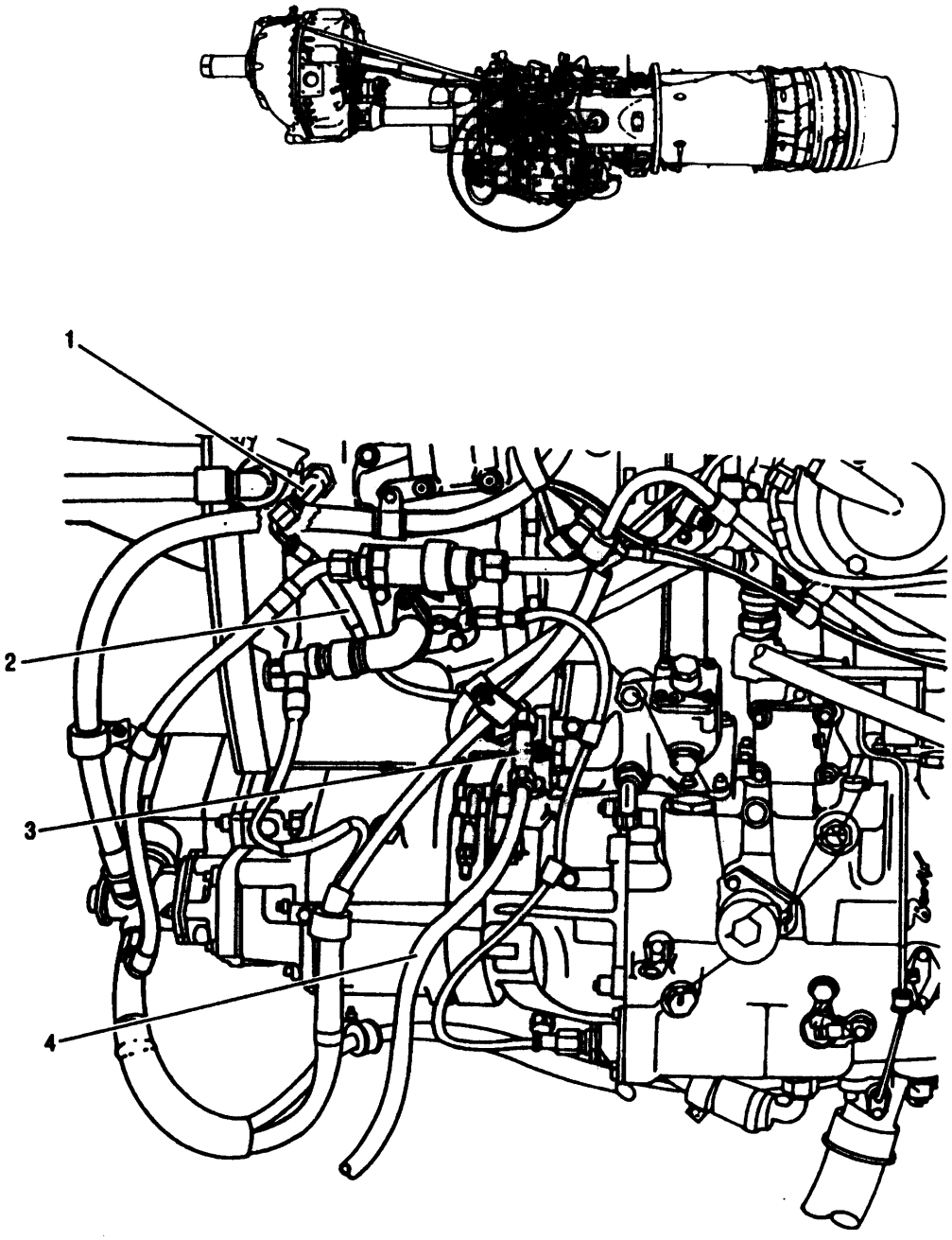

1. 90° Reducing Elbow
2. Inlet Air Sensing Probe-to-Fuel Control Tee Hose
3. Fuel Control Tee
4. Fuel Control Tee-to-DETC Hose

Figure 4. CIP Components Inspection

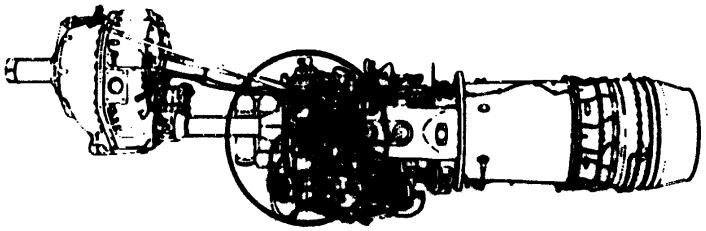

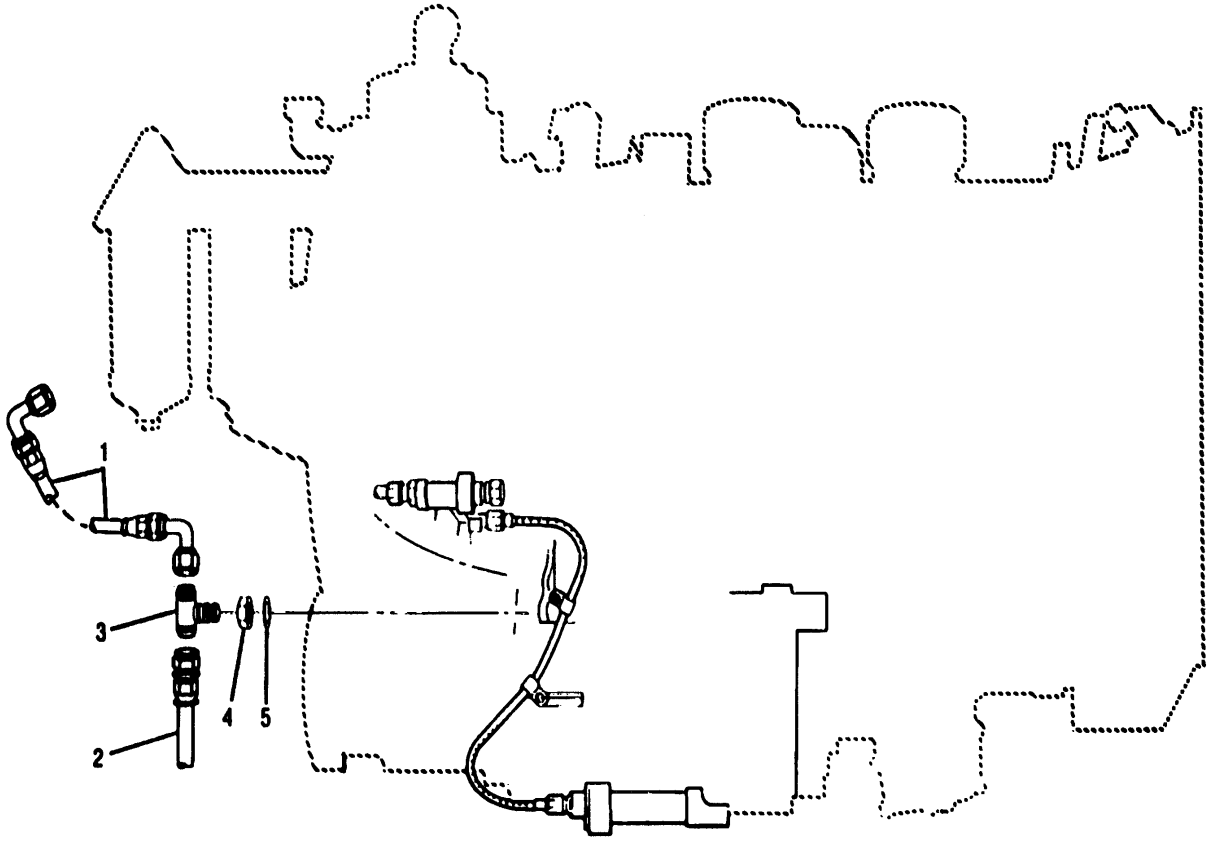

1. Inlet Air Sensing Probe–to–Fuel Control Tee Hose
2. Fuel Control Tee–to–DETC Hose
3. Fuel Control Tee
4. Nut
5. Preformed Packing

Figure 5. CIP Components Replacement (Sheet 1 of 3)

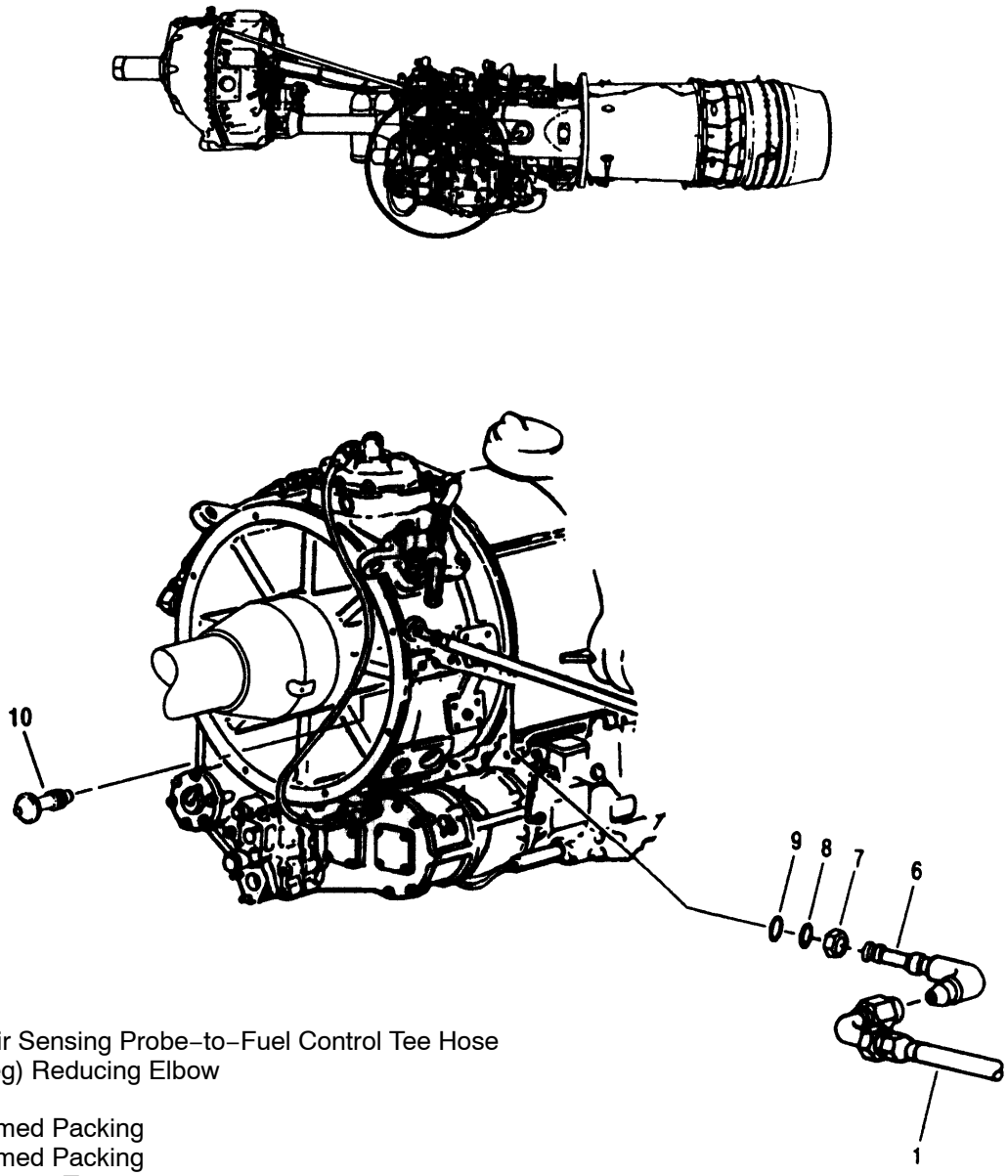

1. Inlet Air Sensing Probe–to–Fuel Control Tee Hose
6. 90 (Deg) Reducing Elbow
7. Nut
8. Preformed Packing
9. Preformed Packing
10. Air Sensing Tip

Figure 5. CIP Components Replacement (Sheet 2 of 3)

1. Inlet Air Sensing Probe–To–Fuel Control Tee Hose
2. Fuel Control Tee–To–DETC Hose
3. Fuel Control Tee
4. Nut
5. Preformed Packing
6. 90° Reducing Elbow
7. Nut
8. Preformed Packing
9. Preformed Packing
10. Air Sensing Tip
11. DETC

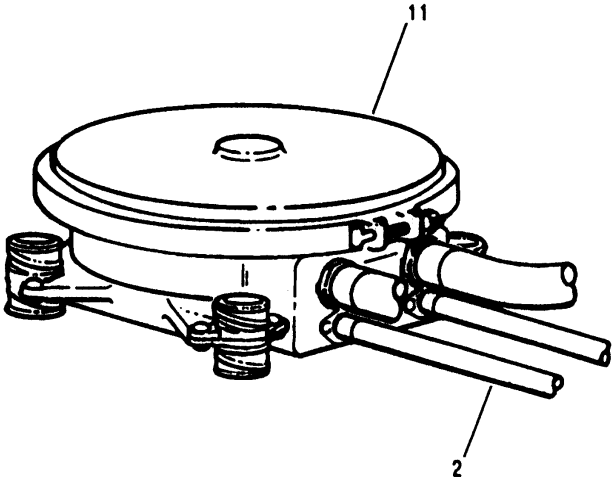

Figure 5. CIP Components Replacement (Sheet 3 of 3)

16. Fuel Control Tee Installation.

Support Equipment Required

Part No./Type Designation	Nomenclature
---	Wrench, torque (0–150 lb in.)

Materials Required

Specification No./Part No.	Nomenclature
MIL–PRF–6081, Grade 1010	Oil, lubricating
MS9020–04	Packing, preformed

a. Install nut (4, figure 5) on fuel control tee (3).

Lubricating Oil, MIL–PRF–6081, (Grade 1010) **7**

b. Install preformed packing (5) on fuel control tee. Apply thin coat of MIL–PRF–6081, grade 1010 lubricating oil to preformed packing.

c. Screw fuel control tee into fuel control housing and position for hose installation.

d. Install nut securing fuel control tee to fuel control housing. Torque nut 55 – 80 lb in. (QA)

e. Apply light coating of MIL–PRF–6081, grade 1010 lubricating oil to threads of fuel control tee.

f. Install fuel control tee–to–DETC hose (2) fitting on fuel control tee. Torque hose fitting 80 – 120 lb in. (QA)

g. Install inlet air sensing probe–to–fuel control tee hose (1) fitting on fuel control tee. Torque hose fitting 80 – 100 lb in. (QA)

17. CIP Hose Removal.

a. Remove inlet air sensing probe–to–fuel control tee hose (1, figure 5, sheet 2) fitting from 90° reducing elbow (6).

b. Remove inlet air sensing probe–to–fuel control tee hose (1, sheet 1) fitting from fuel control tee and remove hose.

c. Remove fuel control tee–to–DETC hose (2, sheet 3) fitting from DETC (11) CIP fitting.

d. Remove fuel control tee–to–DETC hose (2, sheet 1) fitting from fuel control tee (3).

e. Remove fuel control tee–to–DETC hose (2) from clamps.

18. CIP Hose Installation.

Support Equipment Required

Part No./Type Designation	Nomenclature
–––	Wrench, torque (0–150 lb in.)

Materials Required

Specification No./Part No.	Nomenclature
MIL–PRF–6081, Grade 1010	Oil, lubricating

Lubricating Oil, MIL–PRF–6081, (Grade 1010) **7**

a. Apply light coating of MIL–PRF–6081, grade 1010 lubricating oil to threads of 90° reducing elbow (6, figure 5) and fuel control tee (3).

b. Install inlet air sensing probe–to–fuel control tee hose (1, sheets 1 and 3) fittings to fuel control tee and 90° reducing elbow. Torque hose fittings 80 – 120 lb in. (QA)

c. Apply light coating of MIL–PRF–6081, grade 1010 lubricating oil to threads of DETC (11) CIP fitting and fuel control tee.

d. Install fuel control tee–to–DETC hose (2, sheets 1 and 3) fittings to fuel control tee and DETC CIP fitting. Torque hose fittings 80 – 120 lb in. (QA)

19. Air Sensing Tip and 90° Reducing Elbow Removal.

a. Remove inlet air sensing probe–to–fuel control tee hose (1, figure 5, sheet 2) fitting from 90° reducing elbow (6).

b. Loosen nut (7) and remove 90° reducing elbow.

c. Remove and discard preformed packings (8) and (9).

d. Remove nut (7) and retain for installation.

e. Insert 5/32 in. hex wrench into air sensing tip (10) opening.

f. Loosen and remove air sensing tip.

20. Air Sensing Tip and 90° Reducing Elbow Installation.

Support Equipment Required

Part No./Type Designation	Nomenclature
–––	Torque Wrench, 0–150 lb in

Materials Required

Specification No./Part No.	Nomenclature
AS3208–06	Packing, preformed
AS3085–010	Packing, preformed
MIL–PRF–6081, Grade 1010	Oil, lubricating
MIL–S–4383, (Buna–N)	Compound, sealing
MS20995C32	Lockwire, 0.032 in.

Lubricating Oil, MIL–PRF–6081, (Grade 1010) **7**

a. Apply light coating of MIL–PRF–6081, grade 1010 lubricating oil to threads of air sensing tip (10, figure 5).

b. Using 5/32 in. hex wrench, install air sensing tip (in opening located on 9 o'clock strut facing forward). Torque air sensing tip 40 – 65 lb in. (QA)

c. Install short piece of lockwire. Twist and dress flat against boss spotface. (QA)

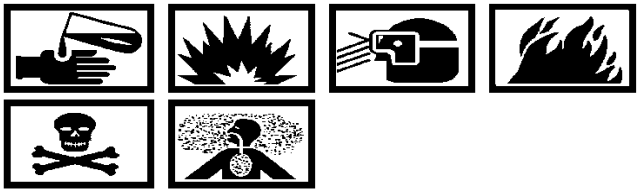

Sealing Compound, (Buna–N)
MIL–S–4383 **46**

d. Allowing 30 minutes between each protective coat, apply three coats of MIL–S–4383, (Buna–N) compound to air sensing tip and surrounding area. (QA)

Lubricating Oil, MIL–PRF–6081, (Grade 1010) **7**

e. Apply light coating of MIL–PRF–6081, grade 1010 lubricating oil to threads of 90° reducing elbow (6) and preformed packings (8) and (9).

f. Install nut (7) on 90° reducing elbow.

g. Install preformed packings on 90° reducing elbow.

h. Screw 90° reducing elbow into compressor air inlet housing and position so outlet will accept inlet air sensing probe–to–fuel control tee hose (1).

i. Tighten nut (7) securing 90° reducing elbow and torque nut 100 – 110 lb in. (QA)

j. Install inlet air sensing–to–fuel control tee hose fitting on 90° reducing elbow. Torque hose fitting 80 – 120 lb in. (QA)

21. RPM COMPONENTS (figure 6). Using redundant sets of magnetic poles (RS and TS), the torquemeter pickup unit samples no–load and load torquemeter rotations. An electromagnetic signal, designated as (N1) or (N2) is sent through the interconnecting wiring harness to the DETC. The DETC processes either signal and provides the electronic RPM signal to the EAU through the RS–422 bus. The EAU uses the RPM signal in conjunction with power lever angle (PLA) and weight on wheels (WOW) signals to establish modes of operation (table 4). The EAU uses the RPM signal to determine flameout events (table 1). The EAU also monitors the RPM signal for over–speed events (table 5).

22. <u>RPM Components Checkout</u>.	Yes	No
a. Start engine (WP 025 00), run at flight idle, and go to step b.		
b. Record RPM displayed on TPETS tachometer and go to step c.		
c. Using the HMT, display N1 value and compare with recorded RPM value. Are values within ±0.2%?	d	e
d. Display N2 value and compare with N1 value. Is N2 value within ±30 RPM of N1 value?	k	e
e. Shut engine down (WP 025 00), remove electrical power, and go to step f.		
f. Perform torquemeter pickup unit check (WP 027 00). Did check result in torquemeter pickup unit replacement?	g	h
g. Repeat this procedure from step a.	–	–
h. Remove DEC DISCONNECT connector from DETC connector J2. Check interconnecting wiring harness continuity (figure 6, sheet 1). Is continuity correct?	j	i
i. Replace interconnecting wiring harness (WP 107 00) and repeat from step a.	–	–
j. Replace DETC (paragraphs 57 and 58, this WP) and repeat from step a.	–	–
k. RPM components checkout complete. If processing of the RPM signal is to be checked, perform DETC checkout procedures (paragraph 56, this WP).	–	–

Table 4. EAU Modes of Operation

	Start	Ground Idle	Take–Off	Lift–Off	Trend	End of Flight
RPM	(NOTE 1)	(NOTE 4)				
	1500 (10%)	9500 (67%)	14,100 (99%)	14,238 (100%)		
PLA	(NOTE 2)	(NOTE 3)				
	12.5°	20.5°	80.0°	90.0°		
WOW	+28 V	+28 V	+28 V	V<4	V<4	(NOTE 5) +28 V
	Closed (Logic 1)	Closed (Logic 1)	Closed (Logic 1)	Open (Logic 0)	Open (Logic 0)	Closed (Logic 1)
PRS					(NOTE 6)	
L EAU Reason (NOTE 7)	Word 1 Bit 0	Word 1 Bit 2	Word 1 Bit 4		Word 1 Bit 7	
EAU Reason (NOTE 8)				Word 1 Bit 6	Word 1 Bit 11	Word 1 Bit 9
R EAU Reason (NOTE 9)	Word 1 Bit 1	Word 1 Bit 3	Word 1 Bit 5		Word 1 Bit 8	

NOTES:

1. RPM is sampled 4 times per second during each mode.
2. PLA is sampled 4 times per second during each mode.
3. Data is recorded 60 seconds after an end of flight has been detected.
4. Low Speed Ground Idle state exists when WOW is closed and RPM is between 74% and 68%.
5. An end–of–flight state is declared after WOW is closed for 30 seconds after being open. This is done so a touch–and–go landing will not be detected as an end–of–flight condition.
6. PRS activated for one second will enable a 12–second data recording. PRS activated three times in a 10–second period will enable a 12–second trend mode recording.
7. EAU reason word 1 bits are set active and progressively counted upon each valid mode–of–operation detection.
8. EAU reason word 1, bit 10, is not engine–related.
9. The TPETS is wired for a left engine installation and duplicates inputs to both sides of the EAU.
10. In addition to the trend mode, the EAU concurrently executes exceedance mode and other data recordings automatically while in flight.

Table 5. Discrete Exceedance Events

	Over–Horsepower	Over–Speed	Over–Temperature
SHP	(NOTES 1, 2)	–––––	–––––
RPM	–––––	(NOTES 3, 4)	–––––
CTMT	–––––	–––––	(NOTES 5,6)
L EAU	Word 2	Word 2	Word 2
Reason	Bit 6 & 7	Bit 1 & 2	Bit 10 & 11
R EAU	Word 4	Word 4	Word 4
Reason	Bit 6 & 7	Bit 1 & 2	Bit 10 & 11

NOTES:

1. If SHP is greater than 5125 for more than 3 seconds, an over–horsepower event will occur.
2. If SHP is greater than 6000 for more than 1 second, an over–horsepower event will occur.
3. If RPM is greater than 14,524 (102%) for more than 2 minutes, an over–speed event will occur.
4. If RPM is greater than 15,378 (108%) for more than 1 second, an over–speed event will occur.
5. If CTMT is greater than 875°C for more than 3 seconds, an over–temperature event will occur.
6. If CTMT is greater than 930°C for more than 1 second, an over–temperature event will occur.

23. SHAFT HORSEPOWER (SHP) COMPONENTS (figure 6). Using additional sets of magnetic poles (RT and TT), the torquemeter pickup unit samples no–load and load torquemeter rotations. The electromagnetic signals, designated as (N1) and (N2) are sent through the interconnecting wiring harness directly to the TPETS Marconi horsepower indicator. The other set of outputs (RS and TS) are sent to the DETC (paragraph 21, this WP). The DETC reads N1 as load speed, N2 as no–load reference speed, compares deflection angle (twist), and provides the SHP signal to the EAU through the RS–442 bus. The EAU uses the SHP signal in conjunction with CIT and CIP signals to determine take–off–low–power events (table 1). The EAU also monitors the SHP signal for over–torque events (table 5).

24. <u>SHP Components Checkout</u>.

		Yes	No
	NOTE Steps a and b align the DETC to the coordinator power lever angle and torquemeter references. Step c aligns the Marconi horsepower indicator to the horsepower reference.		
a.	Perform DETC calibration (WP 022 00) and go to step b.		
b.	Perform DETC torque calibration (WP 023 00) and go to step c.		
c.	Perform Marconi horsepower indicator calibration (WP 023 00) and go to step d.		
d.	Start engine (WP 023 00), run at flight idle, and go to step e.		
e.	Using HMT, display SHP value and compare with horsepower indicator. Do values agree within ±10 horsepower?	m	f
f.	Perform RPM components checkout (paragraph 22, this WP). Did checkout result in torquemeter pickup unit replacement?	j	g
g.	Did RPM components checkout result in interconnecting wiring harness replacement?	j	h

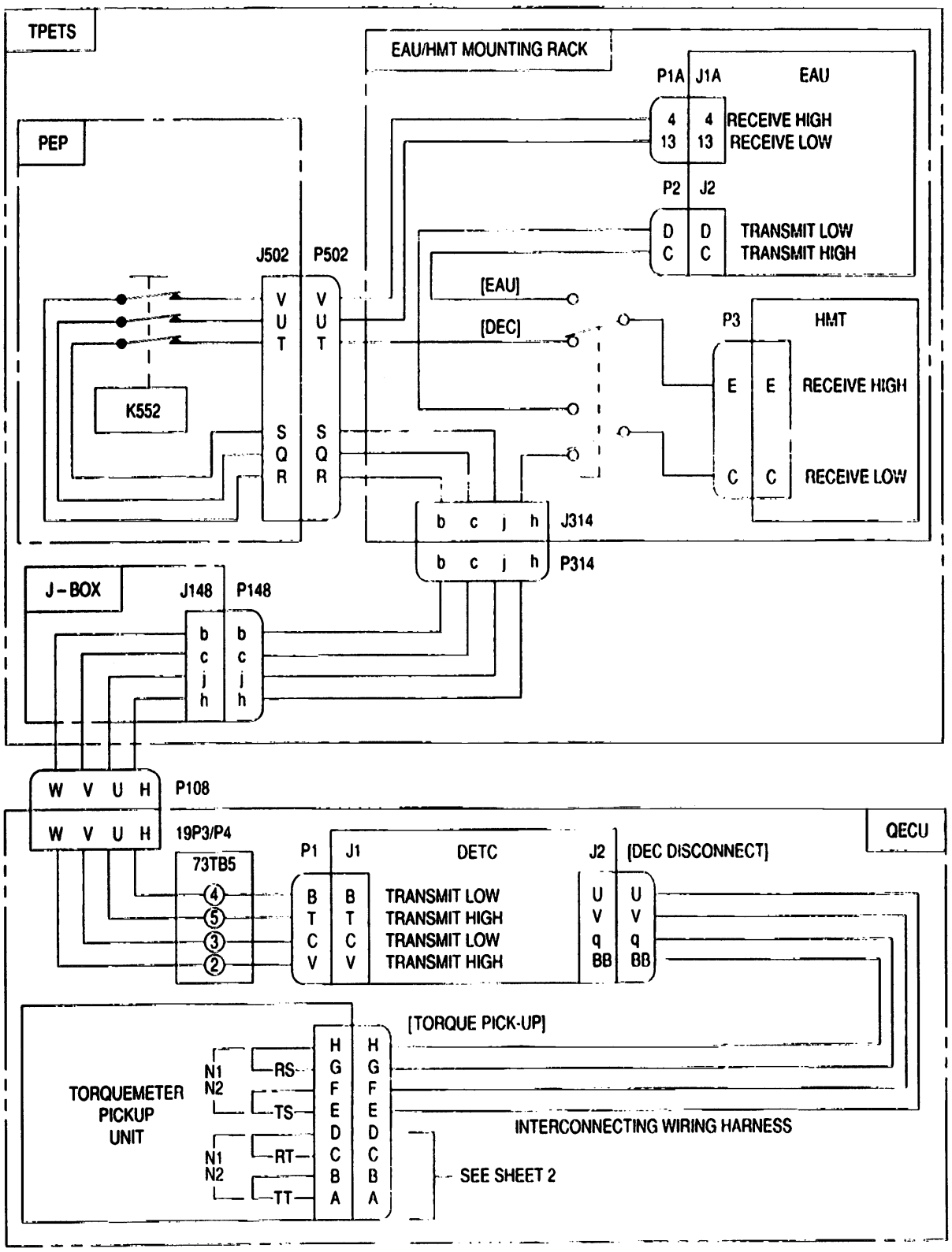

Figure 6. RPM and SHP Components Checkout (Sheet 1 of 2)

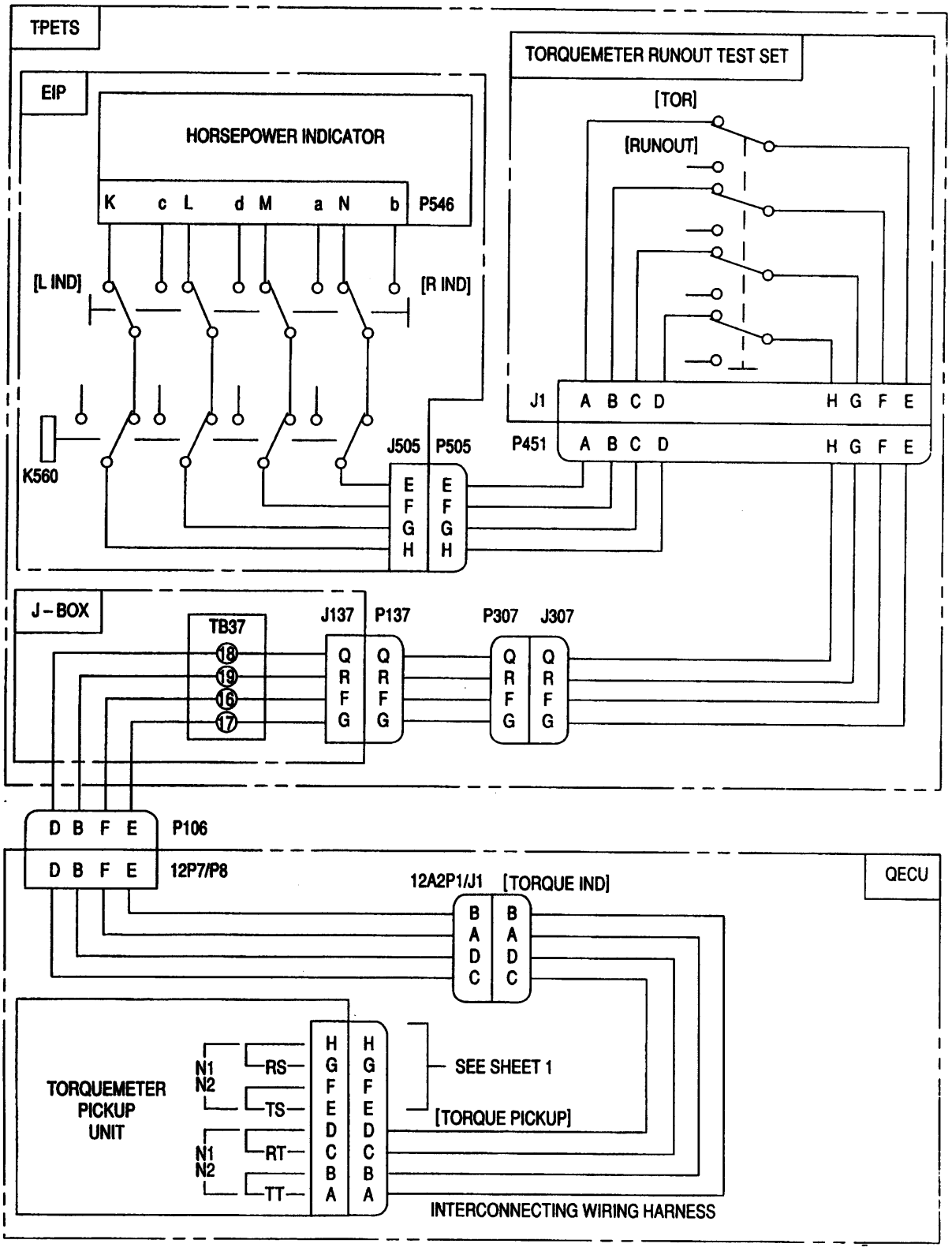

Figure 6. RPM and SHP Components Checkout (Sheet 2)

24. SHP Components Checkout. (cont)	Yes	No
h. Check interconnecting wiring harness continuity (figure 6, sheet 2). Is continuity correct?	i	k
i. Did RPM components checkout result in DETC replacement?	j	l
j. Repeat this procedure from step a.	–	–
k. Replace interconnecting wiring harness (WP 080 00) and repeat from step a.	–	–
l. Replace DETC (paragraphs 57 and 58, this WP) and repeat from step a.	–	–
m. SHP components checkout complete. If processing of the SHP signal is to be checked, perform DETC checkout procedures (paragraph 56, this WP).	–	–

25. POWER LEVER ANGLE (PLA) COMPONENTS (figure 7). A potentiometer within the coordinator senses the TPETS power lever position. The resistive signal provided by the potentiometer is sent through the interconnecting wiring harness to the DETC. The DETC processes the PLA signal and provides the signal to the EAU through the RS–422 bus. The EAU uses the PLA signal in conjunction with RPM and WOW signals to establish modes of operation (table 4).

26. PLA Components Checkout.

Support Equipment Required

Part No./Type Designation	Nomenclature
–––	Multimeter, digital

NOTE

The following steps are performed when support equipment electrical power is applied and the engine is not running.

	Yes	No
a. Set EAU/HMT mounting rack EAU/DEC switch to the DEC position and go to step b.		
b. Advance power lever to maximum position and go to step c.		
c. Using the HMT, display PLA value and go to step d.		
d. Monitor PLA value displayed on TPETS PWR LEVER POS indicator and compare with HMT value while retarding power lever. Do PLA values agree in accordance with table 6?	o	e
e. Check coordinator to fuel control rigging (WP 065 00). Is rigging correct?	g	f
f. Re–rig or replace coordinator to fuel control rigging (WP 065 00) and repeat from step a.	–	–
g. Remove interconnecting wiring harness DEC DISCONNECT connector and go to step h.		
h. Using digital multimeter, measure resistance between connector pins k and z. Is resistance 4950 – 5050 ohms?	i	k
i. While monitoring resistance at pins k and z, move power lever. Does resistance remain constant?	j	m

NOTE

Resistance measured in the following step will increase as the power lever is advanced.

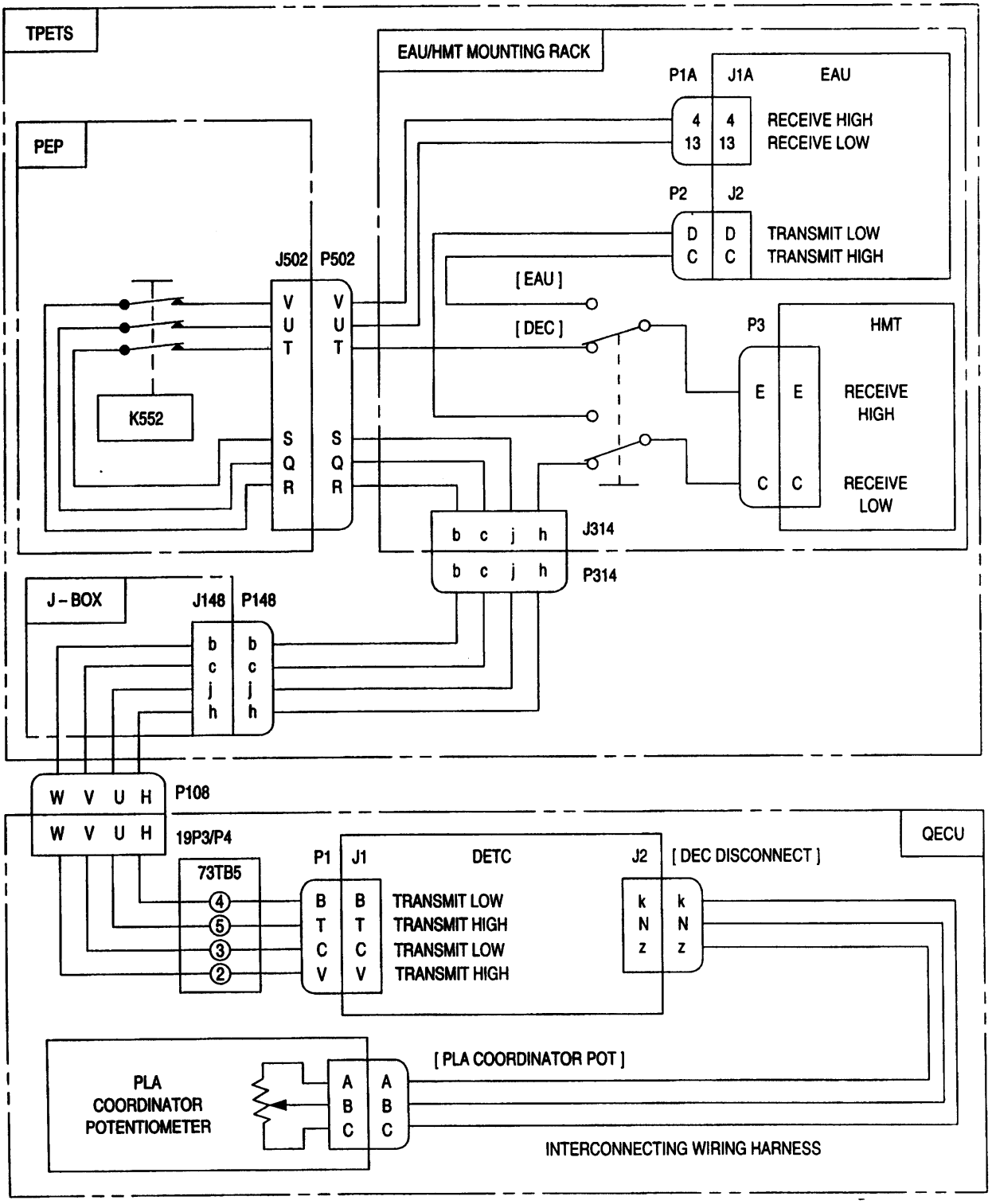

Figure 7. PLA Components Checkout

26. PLA Components Checkout. (cont)

		Yes	No
j.	Measure resistance between connector pins N and Z for PLA values (measured in step d) that do not agree. In accordance with table 2, is resistance within limits?	n	k
k.	Check interconnecting wiring harness continuity (figure 7). Is continuity correct?	m	l
l.	Replace interconnecting wiring harness (WP 081 00) and repeat from step a.	–	–
m.	Replace engine coordinator (WP 065 00) and repeat from step a.	–	–
n.	Replace DETC (paragraphs 57 and 58, this WP) and repeat from step a.	–	–
o.	PLA components checkout complete. If processing of the PLA signal is to be checked, perform DETC checkout procedures (paragraph 56, this WP).	–	–

Table 6. Coordinator Angles and Resistance Values

TPETS PLA (degrees)	HMT PLA (degrees)	Engine Coordinator Potentiometer (ohms)
90	89.055 to 90.945	4465 to 5040
80	79.056 to 80.944	3990 to 4515
70	69.069 to 70.931	3515 to 3990
60	59.076 to 60.924	3040 to 3465
50	49.090 to 50.910	2565 to 2940
40	39.112 to 40.888	2090 to 2415
30	29.142 to 30.858	1615 to 1890
20	19.200 to 20.800	1140 to 1365
10	9.333 to 10.667	665 to 840
0	3.774 to 5.660	95 to 420

27. COMPENSATED TURBINE MEASURED TEMPERATURE (CTMT) COMPONENTS (figure 8). Located in the third–stage turbine vanes, fourteen thermocouples sample turbine exhaust temperatures. To provide an average temperature, thermocouples are wired in parallel and dispersed around the engine centerline. The turbine measured temperature (TMT) signal provided by the thermocouples is sent through the thermocouple wiring harness, the DEC temp check box, and the interconnecting wiring harness to the DETC. To establish the CTMT signal, the DETC processes the TMT signal with compensation for varying CIT and RPM values. The DETC provides the TMT and CTMT signals to the EAU through the RS–422 bus. The EAU uses the CTMT signal to detect hot–start events (table 1). The EAU uses the CTMT and TMT signals in conjunction with other control and EMS signals to determine surge and flameout events (table 1). The EAU also monitors the CTMT signal to determine over–temperature events (table 5).

28. CTMT Components Checkout.

		Yes	No
Support Equipment Required			
Part No./Type Designation	**Nomenclature**		
–––	Multimeter, digital		

NOTE

Steps a thru h are performed when support equipment electrical power is applied, when the engine is not running, and when engine surfaces are at ambient temperature.

		Yes	No
a.	Using TPETS thermocouple selector switch, select and display outside air temperature on digital temperature indicator (°F) and go to step b.		
b.	Set EAU/HMT mounting rack EAU/DEC switch to the DEC position and go to step c.		

NOTE

Depending on length of time engine has been running and ambient conditions, the engine turbine may retain heat for an unspecified period of time. This can result in excessive temperature differences.

		Yes	No
c.	Using the HMT, display CTMT value (°C). Using the value indicated in step a and the conversion chart listed in table 7, is value displayed on HMT within ±5°C of outside air temperature?	i	d
d.	Remove, clean, and install connectors at interconnecting wiring harness and thermocouple harness interface and repeat from step a. Does CTMT check continue to fail?	e	o
e.	Perform thermocouple system check (WP 025 00). Is thermocouple system check correct?	g	f
f.	Perform thermocouple system maintenance (WP 083 00 and WP 087 00) and repeat from step a.	–	–
g.	Check interconnecting wiring harness continuity. Is continuity correct?	o	h
h.	Replace interconnecting wiring harness (WP 081 00) and repeat from step a.	–	–

NOTE

The TPETS turbine temperature indicator is labeled TIT. When the DETC is operating, the TIT indicator displays CTMT.

		Yes	No
i.	Start and run engine until CTMT stabilizes and go to step j.		
j.	Using the HMT, display CTMT value and compare with TIT indicator. Are values within ±10°C?	k	o
k.	Display TMT value and compare with CTMT value. Is value difference greater than 15°C?	p	m
l.	Shut engine down (WP 023 00), remove electrical power and go to step m.	–	–
m.	Assure CIT components checkout (paragraph 9, this WP) is correct and go to step n.		
n.	Assure RPM components checkout (paragraph 22, this WP) is correct and go to step o.		
o.	Replace DETC (paragraphs 57 and 58, this WP) and repeat from step a.	–	–
p.	CTMT components checkout complete. If processing of the CTMT signal is to be checked, perform DETC checkout procedures (paragraph 56, this WP).	–	–

Table 7. TPETS Indicator to HMT Value Conversion Chart

TPETS Indicator Value (°F)	HMT Value (°C)	TPETS Indicator Value (°F)	HMT Value (°C)
–40.0 to –35.0	–40.0 to –37.2	50.0 to 55.0	10.0 to 12.8
–35.0 to –30.0	–37.2 to –34.4	55.0 to 60.0	12.8 to 15.6
–30.0 to –25.0	–34.4 to –31.7	60.0 to 65.0	15.6 to 18.3
–25.0 to –20.0	–31.7 to –28.9	65.0 to 70.0	18.3 to 21.1
–20.0 to –15.0	–28.9 to –26.1	70.0 to 75.0	21.1 to 23.9
–15.0 to –10.0	–26.1 to –23.3	75.0 to 80.0	23.9 to 26.7
–10.0 to – 5.0	–23.3 to –20.6	80.0 to 85.0	26.7 to 29.4
– 5.0 to 0.0	–20.6 to –17.8	85.0 to 90.0	29.4 to 32.2
0.0 to 5.0	–17.8 to –15.0	90.0 to 95.0	32.2 to 35.0
5.0 to 10.0	–15.0 to –12.2	95.0 to 100.0	35.0 to 37.8
10.0 to 15.0	–12.2 to –9.4	100.0 to 105.0	37.8 to 40.6
15.0 to 20.0	–9.4 to –6.7	105.0 to 110.0	40.6 to 43.3
20.0 to 25.0	–6.7 to –3.9	110.0 to 115.0	43.3 to 46.1
25.0 to 30.0	–3.9 to –1.1	115.0 to 120.0	46.1 to 48.9
30.0 to 35.0	–1.1 to 1.7	120.0 to 125.0	48.9 to 51.7
35.0 to 40.0	1.7 to 4.4	125.0 to 130.0	51.7 to 54.4
40.0 to 45.0	4.4 to 7.2	130.0 to 135.0	54.4 to 57.2
45.0 to 50.0	7.2 to 10.0	135.0 to 140.0	57.2 to 60.0

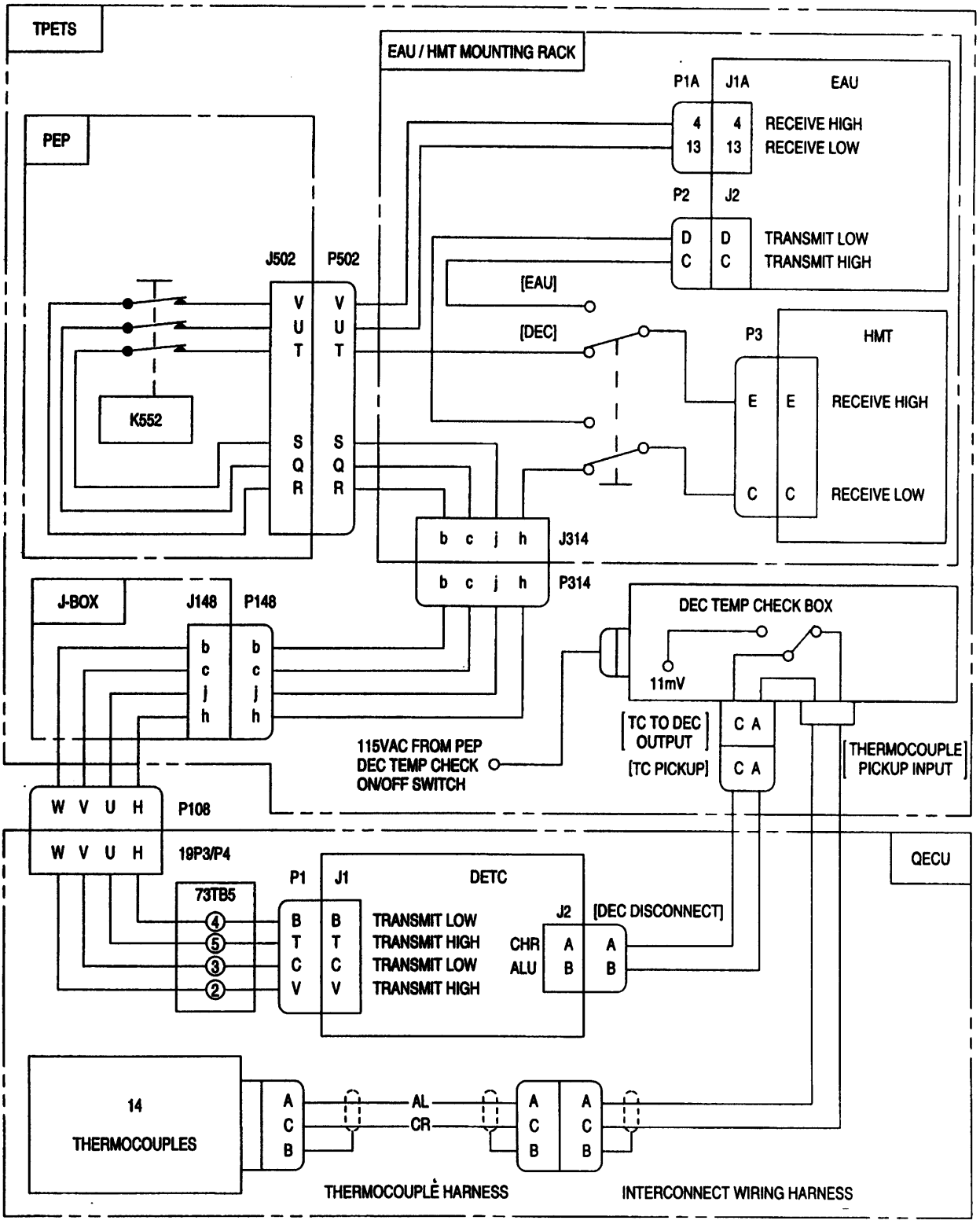

Figure 8. CTMT Components Checkout

29. TURBINE EXHAUST PRESSURE (PS7) COMPONENTS (figure 9). The PS7 probe samples air pressure at the turbine exhaust. Air pressure provided at the probe is sent to the DETC through the aft PS7 tube, forward PS7 tube, and bulkhead fitting–to–DETC hose. A pressure transducer within the DETC converts the air pressure to an electronic PS7 signal. The DETC processes the PS7 signal and provides the signal to the EAU through the RS–422 bus. The EAU uses the PS7 signal in conjunction with the CIP and compressor discharge pressure (CDP) signals to establish the compressor discharge pressure offset (CDPO) calculation.

30. PS7 Components Checkout.

	Yes	No
NOTE The following steps are performed when support equipment electrical power is applied and when the engine is not running.		
a. Using TPETS selector valve, select OUTSIDE BARO PRESS to display outside air pressure (in. Hg) and go to step b.		
b. Using table 3, note closest value (psia) and go to step c.		
c. Set EAU/HMT mounting rack EAU/DEC switch to the DEC position and go to step d.		
d. Using the HMT, display PS7 value (psia) and compare with closest value noted in step b. Is value within +/–0.7 psia of outside air pressure?	g	e
e. Perform PS7 components inspection (paragraph 31, this WP) and repeat from step a. Is the PS7 value correct?	g	f
f. Replace DETC (paragraphs 57 and 58, this WP) and repeat from step a.	–	–
g. PS7 components checkout complete. If processing of the PS7 signal is to be checked, perform DETC checkout procedures (paragraph 56, this WP).	–	–

31. PS7 Components Inspection.

	Yes	No
a. Visually inspect PS7 components. Is chaffing or damage causing air leakage, or damage causing air blockage present?	b	c
b. Replace defective PS7 component (paragraphs 32 thru 37, this WP) and repeat from step a.	–	–
c. Remove bulkhead fitting–to–DETC hose (1, figure 10, sheet 2) fitting from DETC (19) PS7 fitting and go to step d.		
NOTE Personnel must be stationed at turbine port to determine flow of low pressure air from PS7 probe during following steps.		
d. Using low pressure air, blow into bulkhead fitting–to–DETC hose fitting (removed in step a). Is blockage or obstruction indicated by the resistance of air flow?	f	e
e. Replace DETC (paragraphs 57 and 58, this WP) and repeat from step a.	–	–
f. Remove forward PS7 tube (paragraph 34, this WP) and go to step g.		
g. Blow into bulkhead fitting–to–DETC hose. Is blockage or obstruction indicated by the resistance of air flow?	h	i
h. Replace clogged bulkhead fitting–to–DETC hose (paragraphs 32 and 33, this WP) or clogged bulkhead fitting (paragraphs 36 and 37, this WP) and go to step i.		

31. PS7 Components Inspection. (cont)

		Yes	No
i.	Blow into forward PS7 tube (removed in step f). Is blockage or obstruction indicated by the resistance of air flow?	j	k
j.	Replace clogged forward PS7 tube (paragraph 35, this WP) and go to step k.		
k.	Remove bulkhead fitting–to–DETC hose (1, figure 10, sheet 1) from bulkhead fitting (2) and go to step l.		
l.	Temporarily install bulkhead fitting–to–DETC hose on union (5) and go to step m.		
m.	Remove aft PS7 tube (6) fitting from PS7 probe union (7) and go to step n.		
n.	Blow into bulkhead fitting–to–DETC hose. Is blockage or obstruction indicated by the resistance of air flow?	o	p
o.	Replace clogged union (paragraphs 36 and 37, this WP) or clogged aft PS7 tube (paragraphs 34 and 35, this WP) and go to step p.		
p.	Temporarily install bulkhead fitting–to–DETC hose on PS7 probe union and go to step q.		
q.	Blow into bulkhead fitting–to–DETC hose. Is blockage or obstruction indicated by the resistance of air flow?	r	s
r.	Replace clogged PS7 union (paragraphs 36 and 37, this WP) or clean PS7 port and go to step s.		
s.	PS7 components inspection complete. If applicable, install serviceable components removed during this inspection procedure (paragraphs 33, 35, and 37, this WP).	–	–

32. PS7 Hose Removal.

a. Remove bulkhead fitting–to–DETC hose (1, figure 10, sheets 1 and 2) fittings from DETC (19) PS7 fitting and bulkhead fitting (2).

b. Remove bulkhead fitting–to–DETC hose (1) from clamps.

33. PS7 Hose Installation.

Support Equipment Required

Part No./Type Designation	Nomenclature
–––	Wrench, torque (0–150 lb in.)

Materials Required

Specification No./Part No.	Nomenclature
MIL–PRF–6081, Grade 1010	Oil, lubricating

Lubricating Oil, MIL–PRF–6081, (Grade 1010) **7**

a. Apply light coating of MIL–PRF–6081, grade 1010 lubricating oil to threads of bulkhead fitting (2, figure 10) and DETC (19) PS7 fitting.

b. Install bulkhead fitting–to–DETC hose (1, sheets 1 and 2) fittings to DETC PS7 fitting and bulkhead fitting. Torque hose fittings 65 – 100 lb in. (QA)

c. Install clamps on bulkhead fitting–to–DETC hose (1).

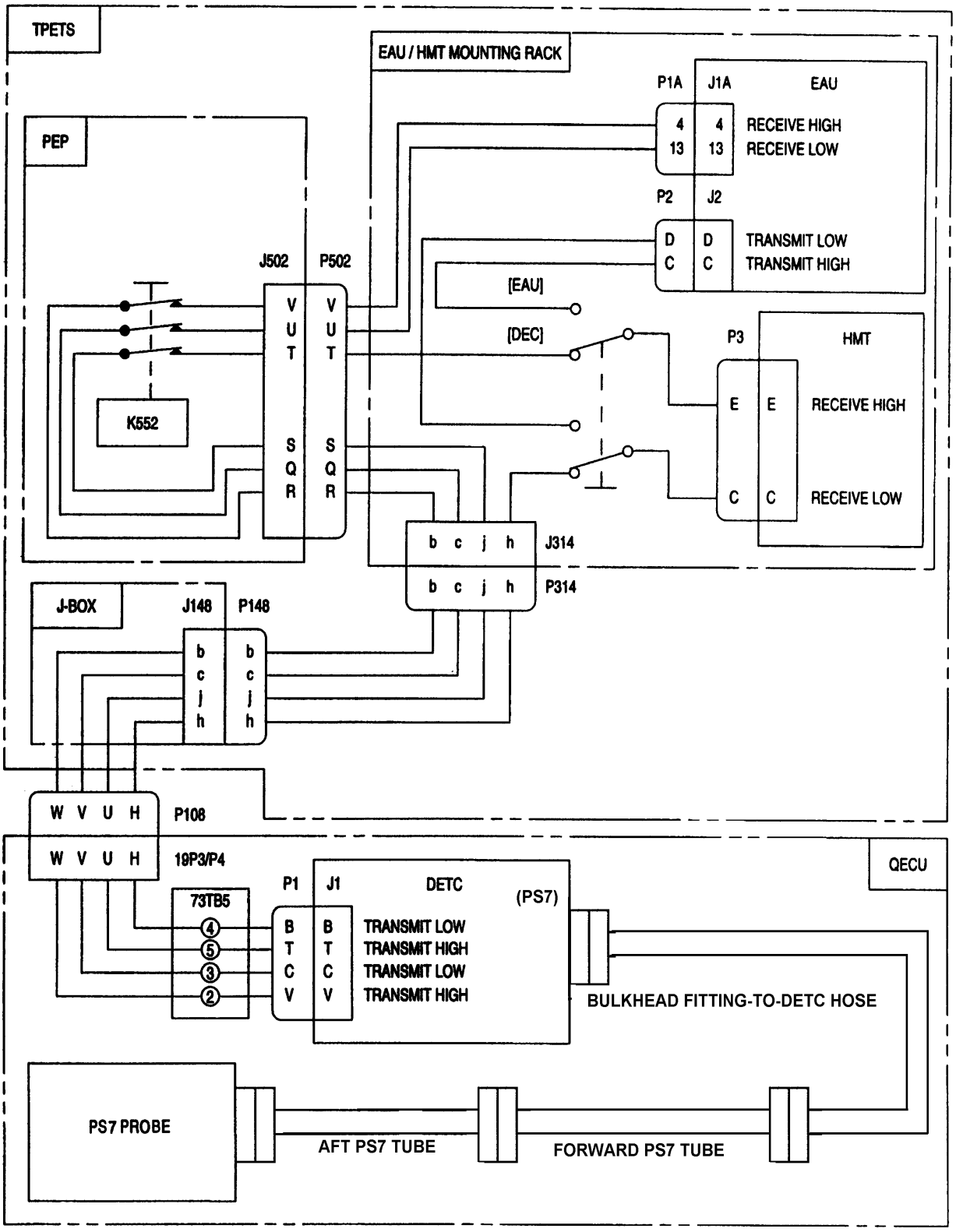

Figure 9. PS7 Components Checkout

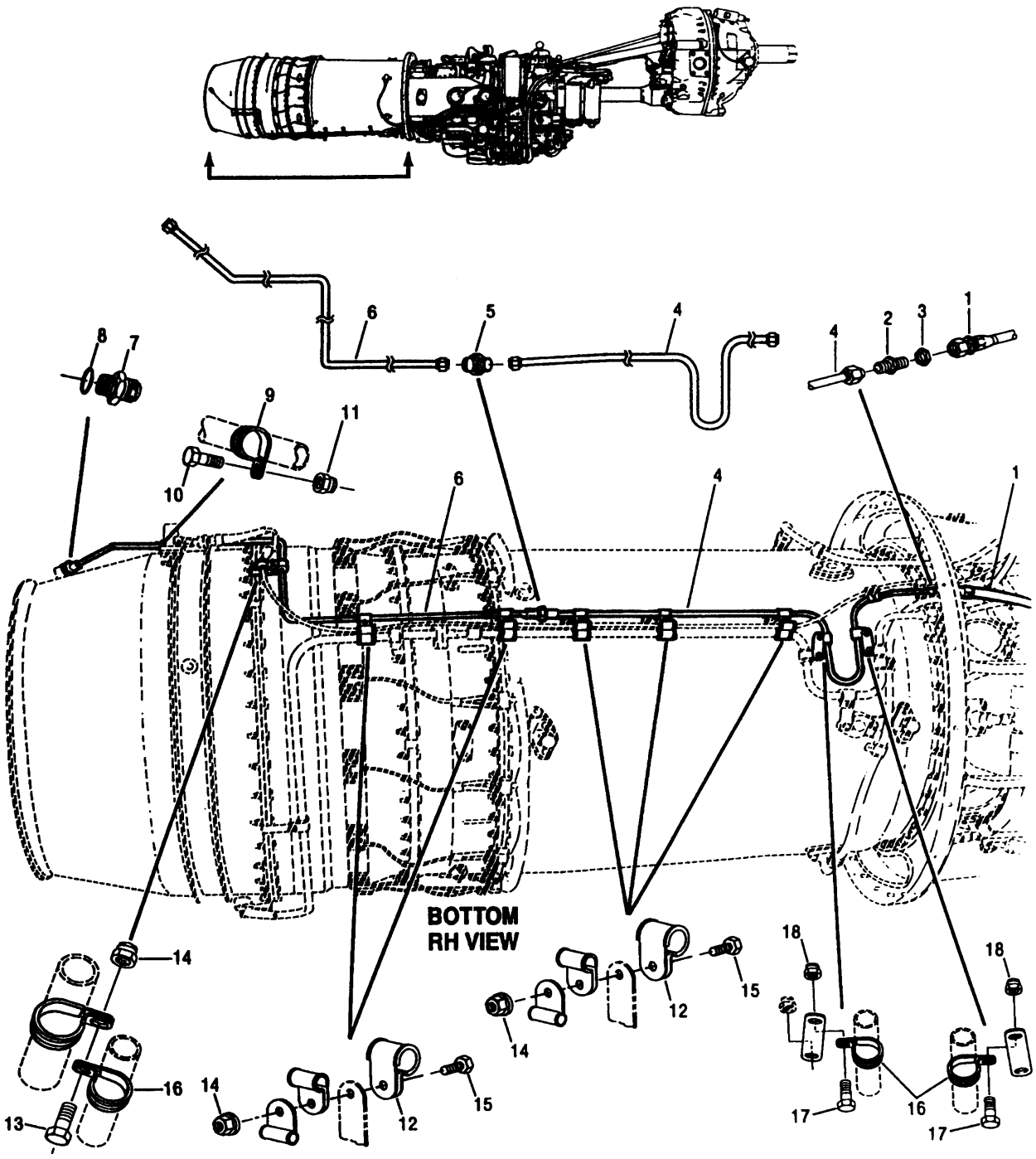

Figure 10. PS7 Components Replacement (Sheet 1 of 2)

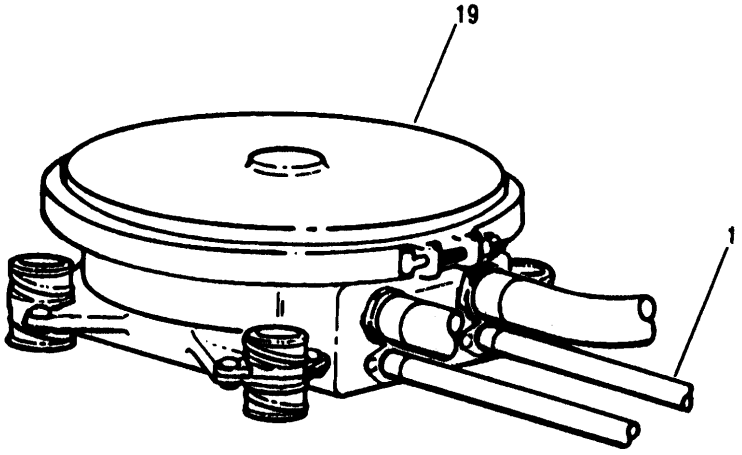

1. Bulkhead Fitting–To–DETC Hose
2. Bulkhead Fitting
3. Nut
4. Forward PS7 Tube
5. Union
6. Aft PS7 Tube
7. PS7 Probe Union
8. Gasket
9. Clamp
10. Bolt
11. Nut
12. Clamp
13. Bolt
14. Nut
15. Bolt
16. Clamp
17. Bolt
18. Nut
19. DETC

Figure 10. PS7 Components Replacement (Sheet 2)

34. PS7 Tubes Removal.

NOTE

Do not remove PS7 tube clamp brackets.

a. Remove clamps (12 and 16, figure 10) to the extent necessary to remove forward PS7 tube (4). Temporarily assemble empty clamps and install at original locations.

b. Remove forward PS7 tube fittings from bulkhead fitting (2) and union (5).

c. Remove forward PS7 tube from engine.

d. Remove clamps (9 and 16) to the extent necessary to remove aft PS7 tube (6). Temporarily assemble empty clamps and install at original locations.

e. Remove aft PS7 tube fittings from union and PS7 probe union (7).

f. Remove aft PS7 tube.

35. PS7 Tubes Installation.

Support Equipment Required

Part No./Type Designation	Nomenclature
---	Wrench, torque (0–150 lb in.)

Materials Required

Specification No./Part No.	Nomenclature
MIL–PRF–6081, Grade 1010	Oil, lubricating

Lubricating Oil, MIL–PRF–6081, (Grade 1010) **7**

a. Apply light coating of MIL–PRF–6081, grade 1010 lubricating oil to threads of bulkhead fitting (2, figure 10) and union (5).

b. Install forward PS7 tube (4) fittings to bulkhead fitting and union. Do not tighten forward PS7 tube fittings.

c. Install clamps (12 and 16) securing forward PS7 tube to engine. Torque nuts 37 – 42 lb in. (QA)

d. Torque forward PS7 tube (4) fittings 65 – 100 lb in. (QA)

Lubricating Oil, MIL–PRF–6081, (Grade 1010) **7**

e. Apply light coating of MIL–PRF–6081, grade 1010 lubricating oil to threads of union and PS7 probe union (7).

f. Install aft PS7 tube (6) fittings to union and PS7 probe union. Do not tighten.

g. Install clamps (9, 12, and 16) securing aft PS7 tube to engine. Torque nuts 37 – 42 lb in. (QA)

h. Torque aft PS7 tube fittings 65 – 100 lb in. (QA)

36. PS7 Bulkhead Fitting and Unions Removal.

a. Remove bulkhead fitting–to–DETC hose (1, figure 10, sheet 1) fitting from bulkhead fitting (2).

b. Remove forward PS7 tube (4) fitting from bulkhead fitting.

c. Remove nut (3) attaching bulkhead fitting to engine.

d. Remove bulkhead fitting.

e. Remove forward PS7 tube (paragraph 34, this WP).

f. Remove union (5).

g. Remove aft PS7 tube (paragraph 34, this WP).

h. Remove PS7 probe union (7) and discard gasket (8).

37. PS7 Bulkhead Fitting and Unions Installation.

Support Equipment Required

Part No./Type Designation	Nomenclature
–––	Wrench, torque (0–150 lb in.)

Materials Required

Specification No./Part No.	Nomenclature
MIL–PRF–6081, Grade 1010	Oil, lubricating
23001146–3	Gasket

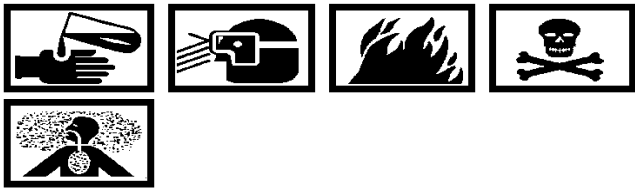

Lubricating Oil, MIL–PRF–6081, (Grade 1010) **7**

a. Apply light coating of MIL–PRF–6081, grade 1010 lubricating oil to threads of PS7 probe union (7, figure 10) and install gasket (8) on union.

b. Install PS7 probe union and gasket into probe housing. Torque PS7 probe union 65 – 100 lb in. (QA)

c. Apply light coating of MIL–PRF–6081, grade 1010 lubricating oil to threads of union (5).

d. Install aft PS7 tube (6) and forward PS7 tube (4) fittings to union. Torque tube fittings 65 – 100 lb in. (QA)

e. Install bulkhead fitting (2) in bulkhead and secure with nut (3). Torque nut 50 – 75 lb in. (QA)

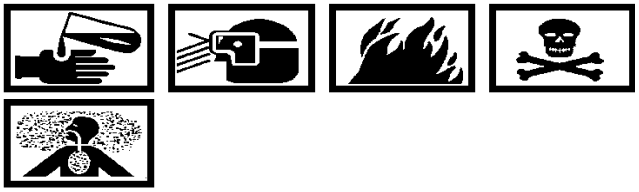

Lubricating Oil, MIL–PRF–6081, (Grade 1010) **7**

f. Apply light coating of MIL–PRF–6081, grade 1010 lubricating oil to threads of bulkhead fitting.

g. Install forward PS7 tube and bulkhead fitting–to–DETC hose (1) to bulkhead fitting. Torque tube and hose fittings 65 – 100 lb in. (QA)

38. COMPRESSOR DISCHARGE TEMPERATURE (CDT) COMPONENTS (figure 11). The temperature sensor portion of the combination total temperature–pressure sensor samples air temperature at the engine compressor diffuser. The resistive signal provided by the sensor is sent through the left–hand wiring harness to the EAU. The EAU uses the CDT signal in conjunction with the CTMT and TMT signals to determine flameout events (table 1). The EAU also uses the CDT signal in conjunction with the TMT signal to calculate and store turbine blade and turbine vane life–usage data. When calculating life–usage data, loss of valid CDT or TMT signals will cause the EAU to set a default CDT value of 371°C and a default TMT value of 865°C.

39. CDT Components Checkout.

Support Equipment Required

Part No./Type Designation	Nomenclature
–––	Multimeter, digital

NOTE

The following steps are performed when support equipment electrical power is applied (except when noted) and when the engine is not running.

		Yes	No
a.	Set EAU/HMT mounting rack EAU/DEC switch to the EAU position and go to step b.		
b.	Using HMT, display and record CDT value. Can CDT value be displayed?	c	i
c.	Remove TPETS electrical power and go to step d.		
d.	Remove electrical connector (17, figure 13) from bracket–mounted COMPRESSOR DISCHARGE TEMPERATURE TRANSDUCER connector (18), and go to step e.		
e.	Using a digital multimeter, measure and record resistance between pins B and C of electrical connector (removed in step d) and go to step f.		
f.	Using the resistance to HMT value (CDT °C) information listed in table 8, does recorded resistance value agree with recorded CDT value?	m	l
g.	Measure between pins A and B. Is resistance less than 2 ohms?	h	l
h.	Measure between pins C and D. Is resistance less than 2 ohms?	i	l
i.	Remove TPETS electrical power and go to step j.		
j.	Check left hand wiring harness continuity. Is continuity correct?	l	k
k.	Replace left hand wiring harness (WP 081 00) and repeat from step a.	–	–
l.	Replace combination total temperature–pressure sensor (paragraphs 44 and 45, this WP) and repeat from step a.	–	–
m.	Install electrical connector (17, figure 13) on bracket–mounted CDT transducer connector (18) (paragraph 45, this WP) and go to step n.		
n.	CDT components checkout complete. If integration of the CDT signal is to be checked, perform EAU checkout procedures (paragraph 70, this WP).	–	–

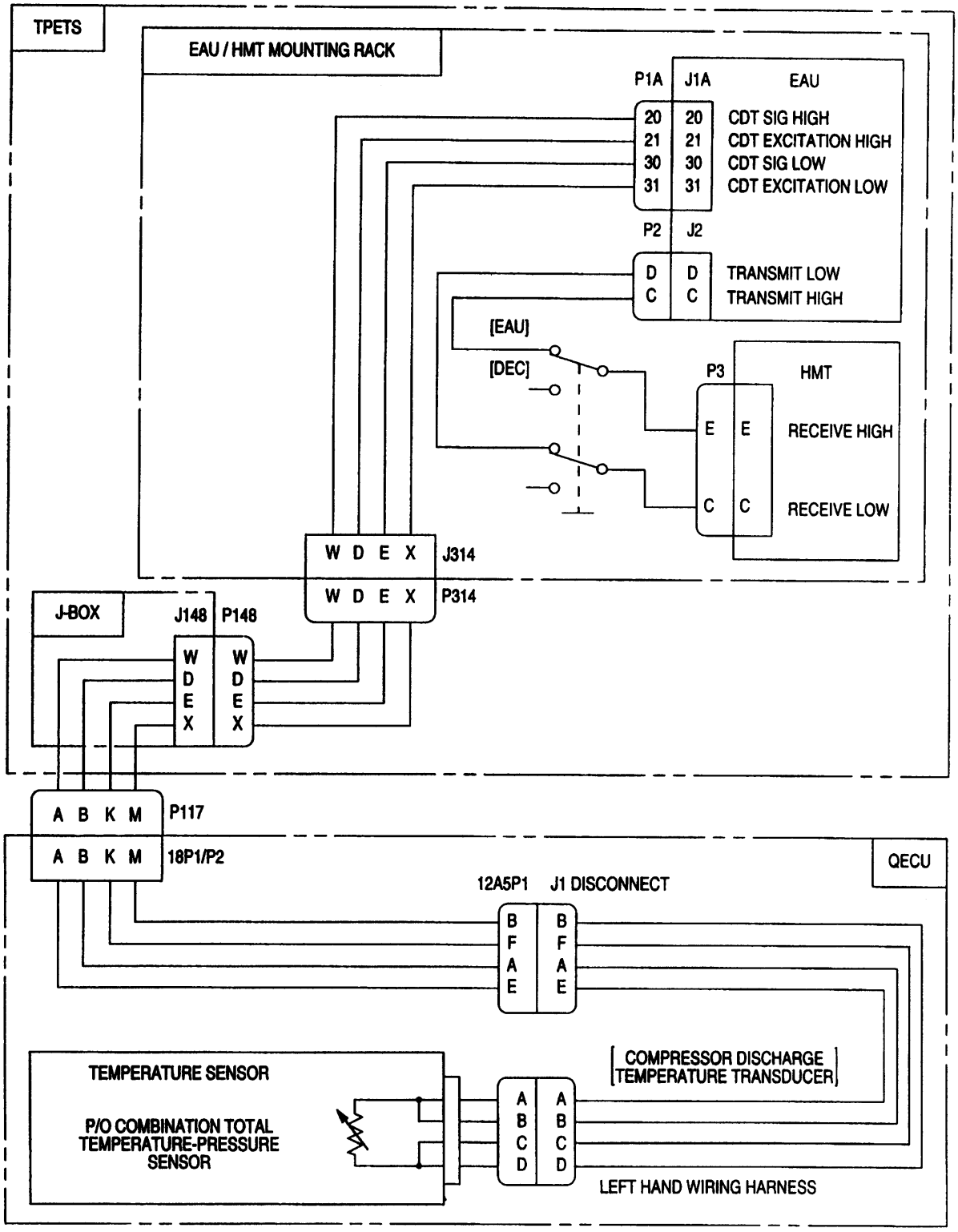

Figure 11. CDT Components Checkout

Table 8. Resistance to HMT Value (CDT °C)

Resistance (ohms)	HMT Value (CDT °C)	Resistance (ohms)	HMT Value (CDT °C)
100.0 to 138.54	–0.1 to 100.1	217.54 to 227.34	314.3 to 344.8
138.54 to 187.62	99.4 to 233.3	227.34 to 237.04	341.2 to 373.0
187.62 to 197.69	230.7 to 261.4	237.04 to 246.65	369.0 to 401.1
197.69 to 207.66	258.6 to 289.5	246.65 to 256.18	396.9 to 429.2
207.66 to 217.54	286.5 to 317.7		

40. COMPRESSOR DISCHARGE PRESSURE (CDP) COMPONENTS (figure 12). The pressure probe portion of the combination total temperature–pressure sensor samples air pressure at the engine compressor diffuser. Air pressure provided at the probe is sent to the CDP transducer. The CDP transducer converts the air pressure to an electronic CDP signal. The CDP signal is sent through the left–hand wiring harness to the EAU. The EAU uses the CDP signal in conjunction with the CIP and PS7 signals to establish the CDPO calculation. The CDPO calculation conditions the CDP signal by providing better resolution. Loss of a valid CDP signal (9 – 20 psia) causes the EAU to set the CDPO value to zero. Also, the EAU processes the CDP signal to form the PD3L signal. The PD3L signal is used to detect a surge event (table 1).

41. CDP Components Checkout.

Support Equipment Required

Part No./Type Designation	Nomenclature
–––	Multimeter, digital

NOTE

The following steps are performed when support equipment electrical power is applied.

		Yes	No
a.	Using TPETS selector valve, select OUTSIDE BARO PRESS to display outside air pressure (in. Hg) and go to step b.		
b.	Using table 3, note closest value (psia) and go to step c.		
c.	Set EAU/HMT mounting rack EAU/DEC switch to the EAU position and go to step d.		
d.	Using the HMT, display CDP value (psia) and compare with value noted in step b. Is CDP value within ±0.7 psia of outside air pressure?	e	g
e.	Start engine (WP 023 00) and run at ground idle speed. Is CDP value 120 – 180 psia?	m	f
f.	Shut engine down (WP 023 00), and got to step g.		
g.	Disconnect CDP probe air tube (5, figure 13) from CDP transducer (2). Is CDP value within ±0.7 psia of outside air pressure?	k	h
h.	Clear obstructed air tube and repeat from step a. If air tube is defective go to step l.		
i.	Check left–hand wiring harness continuity (figure 12). Is continuity correct?	k	j
j.	Replace left–hand wiring harness (WP 081 00) and repeat from step a.	–	–
k.	Replace CDP transducer (paragraphs 42 and 43, this WP) and repeat from step a.	–	–
l.	Replace combination total temperature–pressure sensor (paragraphs 44 and 45, this WP) and repeat from step a.	–	–
m.	CDP components checkout complete. If integration of the CDP signal is to be checked, perform EAU checkout procedures (paragraph 70, this WP).	–	–

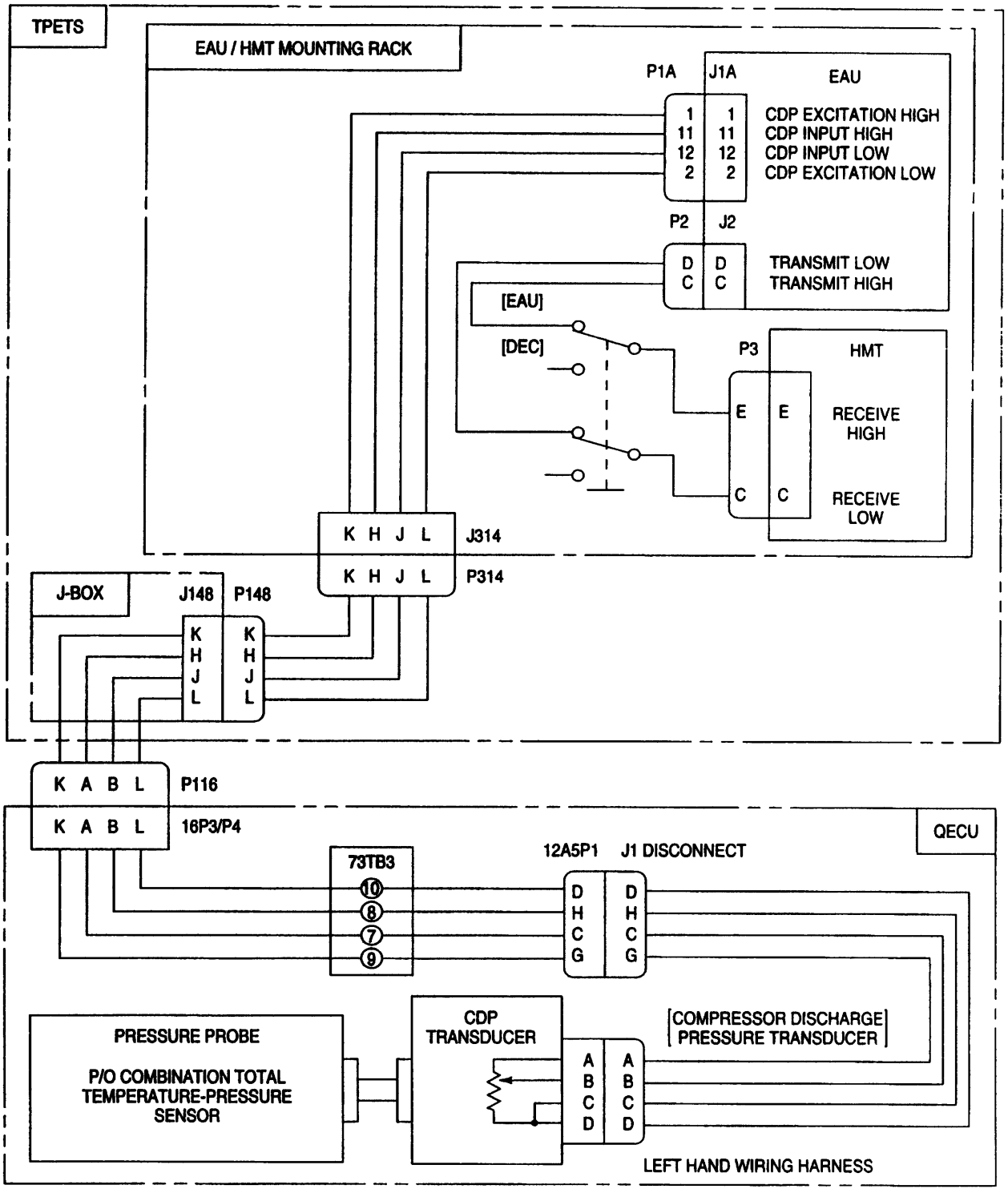

Figure 12. CDP Components Checkout

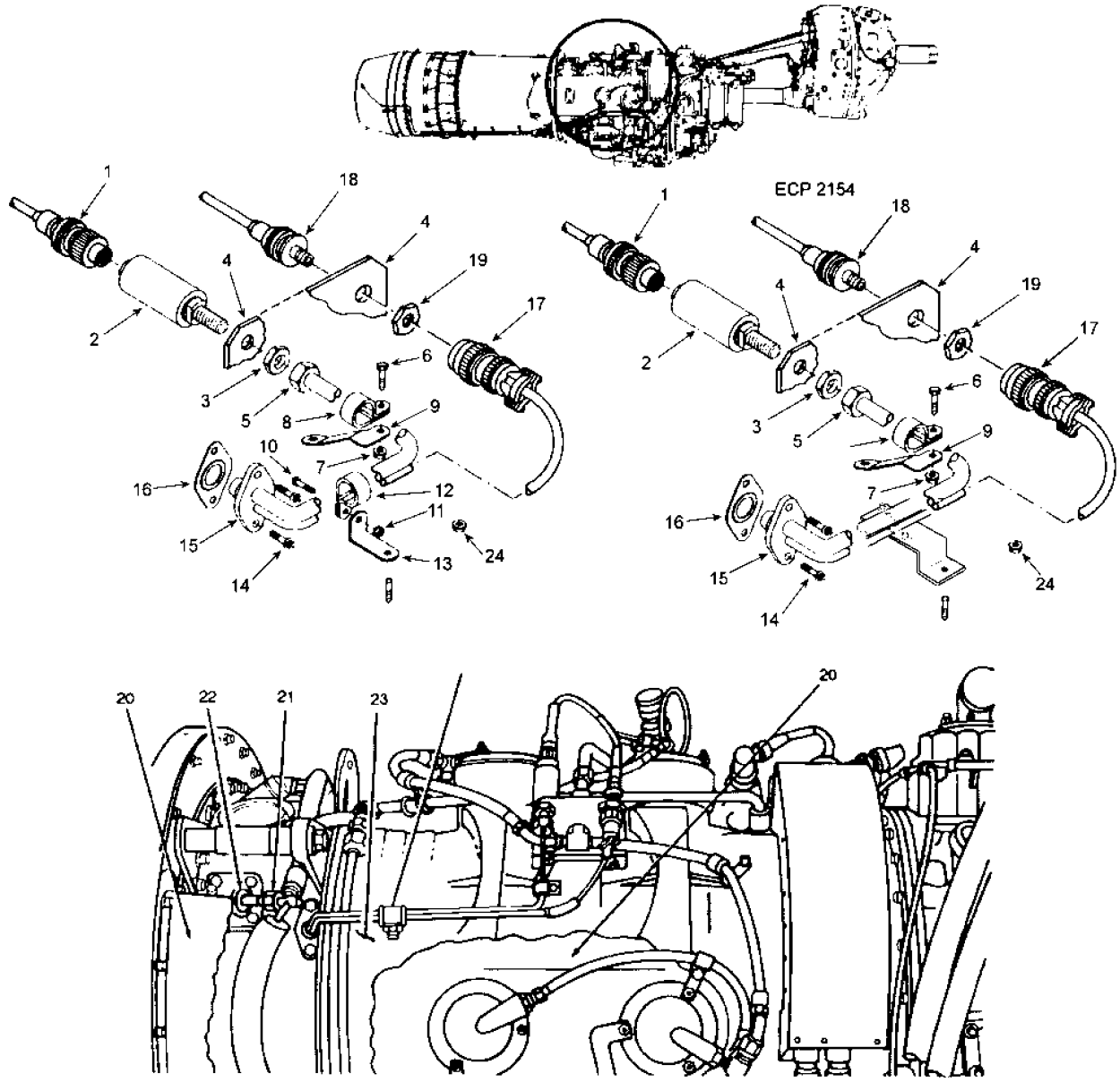

1. COMPRESSOR DISCHARGE PRESSURE TRANSDUCER CONNECTOR
2. CDP TRANSDUCER
3. NUT
4. MOUNTING BRACKET
5. AIR TUBE
6. BOLT
7. NUT
8. CLAMP
9. OFFSET ANGLE BRACKET
10. BOLT
11. NUT
12. CLAMP
13. BRACKET
14. BOLTS (2)
15. SENSOR ASSY, TEMP/PRESS FLANGE
16. FLANGE GASKET
17. ELECTRICAL CONNECTOR
18. COMPRESSOR DISCHARGE
19. NUT
20. BLEED AIR CONNECTOR
21. RIGHT-HAND FLEXIBLE FUEL MANIFOLD FITTING
22. FUEL NOZZLE
23. COMPRESSOR HOUSING
24. NUT

Figure 13. CDT and CDP Components Replacement

42. CDP Transducer Removal.

a. Remove left-hand wiring harness COMPRESSOR DISCHARGE PRESSURE TRANSDUCER connector (1, figure 13) from CDP transducer (2).

b. Remove bolt (6), nut (7), and clamp (8) attaching air tube to offset angle bracket (9).

c. Loosen nut (5) attaching air tube to CDP transducer fitting.

d. Remove nut (3) attaching CDP transducer to mounting bracket (4).

e. Remove CDP transducer.

43. CDP Transducer Installation.

Support Equipment Required

Part No./Type Designation	Nomenclature
---	Wrench, torque (0 - 150 lb in.)

Materials Required

Specification No./Part No.	Nomenclature
MS20995C20	Lockwire, 0.020 in.

a. Position CDP transducer (2, figure 13) in mounting bracket (4).

b. Install nut (3) securing CDP transducer to mounting bracket.

c. Position air tube on CDP transducer fitting and tighten nut (5). Torque nut 80 - 120 lb in. (QA)

d. Install clamp (8), bolt (6), and nut (7) securing air tube to offset angle bracket (9). Torque nut 37 - 42 lb in. (QA)

e. Install COMPRESSOR DISCHARGE PRESSURE TRANSDUCER connector (1) to CDP transducer. Finger tighten connector. Torque connector beyond fingertight (20° maximum) until connecting parts are in solid contact without damage and lockwire. (QA)

44. Combination Total Temperature-Pressure Sensor Removal.

Materials Required

Specification No./Part No.	Nomenclature
MIL-C-85043	Cloth, cleaning, low-lint
MIL-T-23397	Tape, pressure sensitive, masking

a. Remove lockwire, bolts (11, figure 14), and washers (12) attaching vent tube bracket (13) and vent tube (14) to bleed air collector (1).

CAUTION

After the vent tube is removed, tape must be placed over opening. This will prevent foreign objects from entering bleed air collector and damaging the compressor.

b. Remove vent tube bracket and vent tube and place tape over opening.

c. Remove distribution tee-to-tenth-stage bleed air valve hose (6) fitting from distribution tee (7).

d. Remove right fifth-stage-to-bottom fifth-stage bleed air valve hose (8) fitting from distribution tee.

e. Remove nuts (2) and washers (3) attaching bleed air valves (4) to bleed air collector.

f. Remove bleed air valves, including distribution tee and right fifth-stage-to-right tenth-stage bleed air valve hose (5).

CAUTION

After bleed air valves are removed, clean rags must be placed in openings. This will prevent foreign objects from entering and damaging the compressor.

g. Seal bleed air valve openings with clean rags.

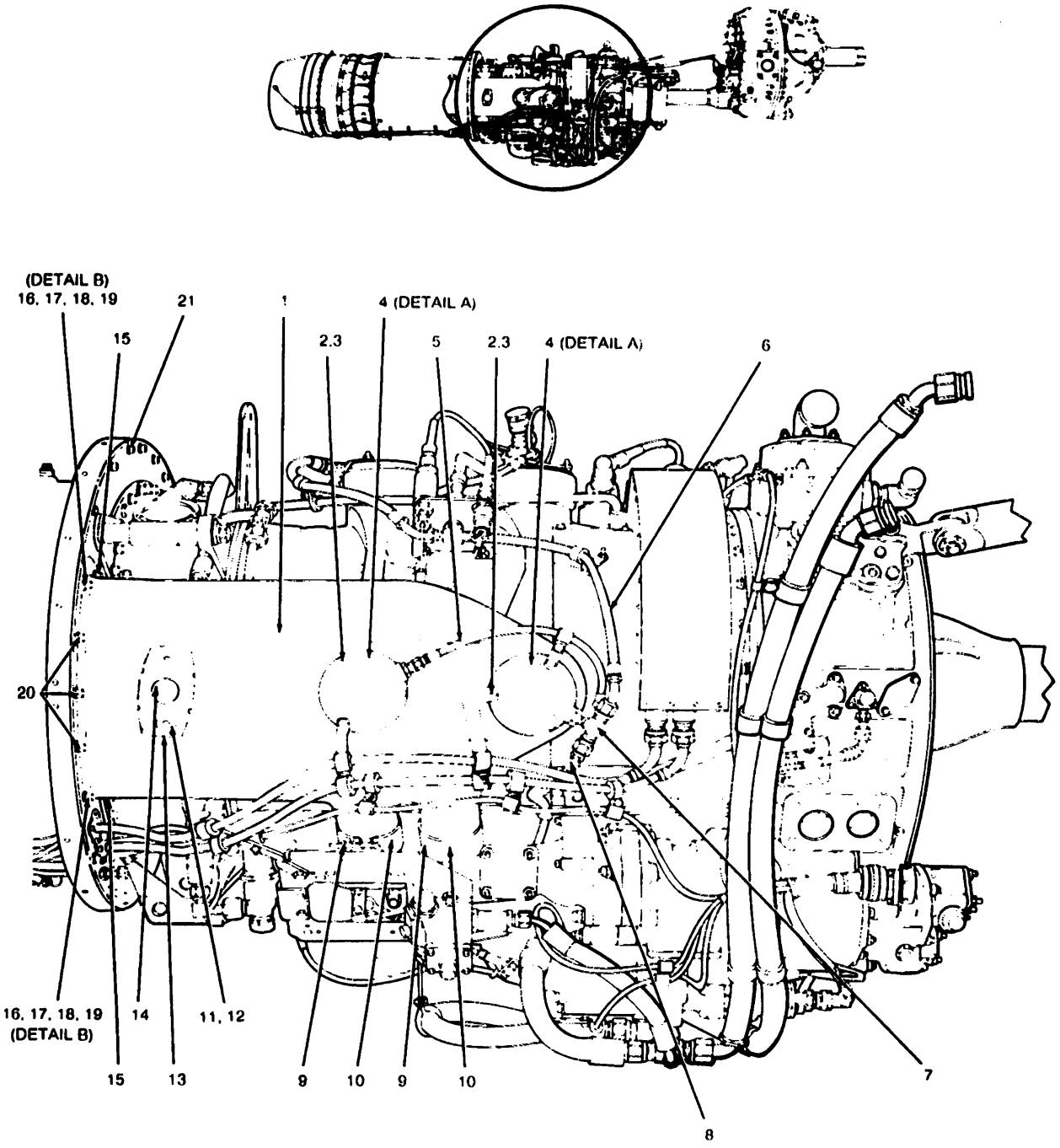

Figure 14. Combination Total Temperature-Pressure Sensor Access (Sheet 1 of 2)

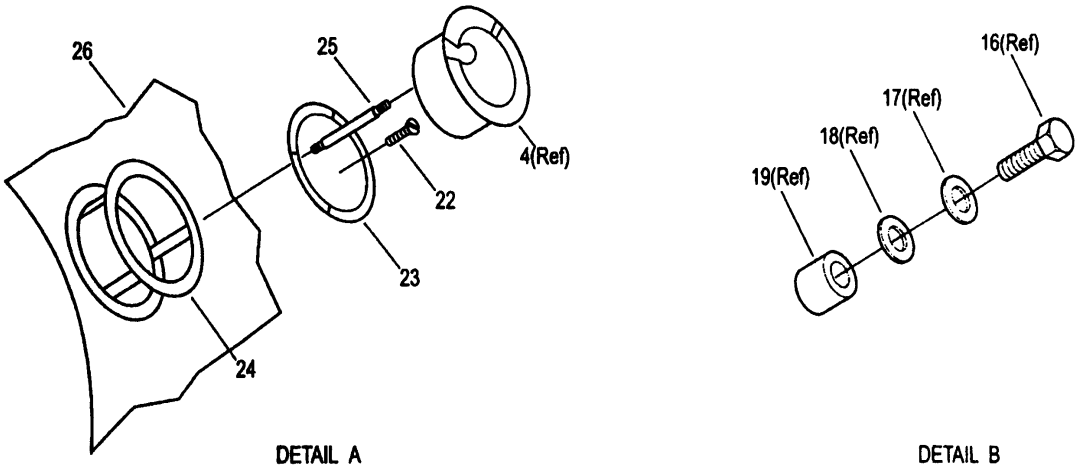

1. Bleed Air Collector
2. Nut
3. Washer
4. Bleed Air Valve
5. Right Fifth Stage–To–Right Tenth Stage Hose
6. Distribution Tee–To–Tenth Stage Bleed Air Valve Hose
7. Distribution Tee
8. Right Fifth Stage–To–Bottom Fifth Stage Bleed Air Valve Hose
9. Nut
10. Clamp Coupling
11. Bolt
12. Washer
13. Vent Tube Bracket
14. Vent Tube
15. Bolt
16. Bolt
17. Washer
18. Nonmetallic Washer
19. Bushing
20. Bolt
21. Spray Shield Baffle Ring
22. Screw
23. Bolt Lock Ring
24. Spacer
25. Shouldered Stud
26. Compressor Housing

Figure 14. Combination Total Temperature–Pressure Sensor Access (Sheet 2)

h. Remove screws (22, detail A, figure 14) attaching bolt lock rings (23) to spacers (24) at bleed air valve openings. Remove bolt lock rings (23).

i. Remove shouldered studs (25) from compressor housing (26).

j. Loosen nuts (9) at coupling clamps (10).

k. Remove bolts (16), washers (17), nonmetallic washers (18), and bushings (19).

l. Remove bolts (15 and 20) attaching bleed air collector (1) to spray shield baffle ring (21).

m. Move bleed air collector minimum distance to access and remove the total temperature-pressure sensor.

n. Remove bolt (6, figure 13), nut (7), and clamp (8) attaching air tube to offset angle bracket (9).

o. For ECP 2154 Total Temperature and Pressure Combination Sensor Assembly with an integral clamp bracket to secure the assembly to the compressor casing (Figure 13). proceed to step o.(2).

(1) (non-ECP 2154) Remove bolt (10), nut (11), and clamp (12) attaching pressure tube to bracket (13). Proceed to step p.

(2) (ECP 2154) Remove nut (24) and discard.

p. Remove right-hand flexible fuel manifold fittings (21) from fuel nozzle.

q. Remove bolts (14) attaching air tube flange (15) and flange gasket (16) to compressor housing. Discard flange gasket.

r. Loosen nut attaching air tube (5) to CDP transducer (2) fitting.

s. Remove electrical connector (17) from bracket-mounted COMPRESSOR DISCHARGE TEMPERATURE TRANSDUCER connector (18).

t. Remove combination total temperature-pressure sensor from compressor housing.

45. Combination Total Temperature-Pressure Sensor Installation.

Support Equipment Required

Part No./Type Designation	Nomenclature
---	Wrench, torque (0 - 150 lb in.)
---	Wrench, torque (150 - 300 lb in.)

Materials Required

Specification No./Part No.	Nomenclature
NS165	Compound, Anti-seize (Never-Seez)
MIL-PRF-6081, Grade 1010	Oil, lubricating
MS20995C20	Lockwire, 0.020 in.
MS20995C32	Lockwire, 0.032 in.

a. Install flange gasket (16, figure 13) on flange (15) and position combination total temperature-pressure sensor in hole at rear of compressor housing.

b. Install bolts (14) securing flange gasket and flange to compressor housing. Tighten bolts fingertight.

c. Position air tube (5) on CDP transducer (2) fitting and tighten nut. Torque nut 80 - 120 lb in. (QA)

d. Torque bolts (14) 70 - 85 lb in. (QA)

e. Install electrical connector (17) on bracket-mounted COMPRESSOR DISCHARGE TEMPERATURE TRANSDUCER connector (18). Finger tighten connector. Torque connector beyond fingertight (20° maximum) until connecting parts are in solid contact without damage. Secure connector with lockwire.

f. For ECP 2154 Total Temperature and Pressure Combination Sensor Assembly with an integral clamp bracket to secure the assembly to the compressor casing (Figure 13) proceed to step f.(2).

(1) (non-ECP 2154) Install clamp (12), bolt (10), and nut (11) securing air tube (5) and cable to bracket (13). Torque nut to 37 to 42 inch-pounds. (QA) Proceed to step g.

(2) (ECP 2154) If installed, remove bracket (13) and nut (24) and discard. Install integral clamp bracket over compressor case stud and secure with a new nut (24). The two fasteners on the integral clamp bracket shall be loosened and the integral clamp bracket repositioned to ensure proper alignment of the tube. Torque nut to 74 to 89 inch pounds. (QA)

g. Install clamp (8), bolt (6), and nut (7) securing air tube and cable to offset angle bracket (9). Adjust bracket, if necessary, to align with tube without forcing tube. Torque nut 37 - 42 lb. in. (QA)

h. Install right-hand flexible fuel manifold fitting (21) on fuel nozzle. Torque manifold fitting 80 - 120 lb in. (QA)

i. Position bleed air collector (1, figure 14) in clamp coupling (10) and at proper location on spray shield baffle ring (21).

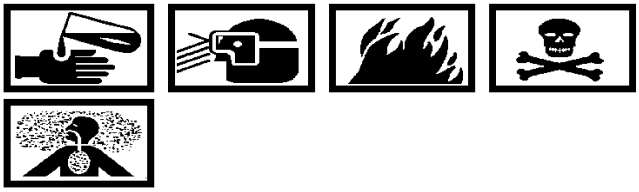

Anti-seize Compound (Never Seez) NS165 32

j. Apply NS165 to threads of bolts (15, 16, and 20).

k. Install bolts (15 and 20) securing bleed air collector to spray shield baffle ring. Tighten bolts for snug fit.

l. Install bolts (16), washers (17), nonmetallic washers (18), and bushings (19) (refer to Detail B, figure 14). Tighten bolts for snug fit.

m. Apply NS165 to threads of shouldered studs (25). Install shouldered studs in compressor housing (26) at each bleed air valve opening. Tighten shouldered studs for snug fit.

n. Place one bolt lock ring (23) over each set of shouldered studs. Back off shouldered stud 1/4 turn maximum until square flange lines up with slots in bolt lock rings.

o. Install screws (22) securing each bolt lock ring to spacers (24). Torque screws 12 - 15 lb in. (QA)

p. Torque bolts (15, 16, and 20) 74 - 89 lb in. (QA)

q. Tighten and torque nuts (9) 14 - 28 lb in. (QA)

r. Remove cloth from bleed air valve openings and install bleed air valves (4) in openings.

s. Position cable mounting brackets over stud threads and install nuts (2) and washers (3) securing each bleed air valve. Torque nuts 50 - 60 lb in. (QA)

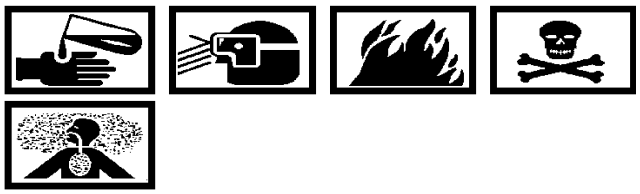

Lubricating Oil, MIL-PRF-6081, (Grade 1010) 7

t. Apply light coat of MIL-PRF-6081, grade 1010 lubricating oil to threads of distribution tee (7) and install right fifth-stage-to-bottom fifth-stage bleed air valve hose (8) and distribution tee-to-tenth stage bleed air valve hose (6) fittings to distribution tee. Torque hose fittings 200 - 250 lb in. (QA)

u. Remove tape covering vent tube opening and install vent tube (14) and vent tube bracket (13) at opening.

v. Install bolts (11) and washers (12) securing vent tube bracket to bleed air collector. Torque bolts 70 - 85 lb in. and lockwire. (QA)

46. VIBRATION COMPONENTS (figures 15 and 16). Accelerometers sample vibration frequency and velocity at three engine locations. One accelerometer, mounted on the reduction gear unit, provides the gearbox vibration (GVIB) signal. Another accelerometer, mounted on the compressor unit, provides the compressor vibration (CVIB) signal. The remaining accelerometer, mounted on the turbine unit, provides the turbine vibration (TVIB) signal. The GVIB signal is sent through the left-hand wiring harness to the EAU. The CVIB and TVIB signals are sent through the right-hand wiring harness to the EAU. The EAU detects vibration signal frequencies and velocities in ranges of 15 - 1600 Hz and 0 - 5 in. per second (IPS). Based on hardware characteristics, the 15 - 1600 Hz frequency range is broken down into 25 separate frequency ranges (WP 025 00). Each separate frequency range is assigned a frequency number (fn). The EAU stores fn vibration data in dedicated memory bins. Vibration exceedance at fn 02 (propeller rotational), fn 11 (engine rotational at high speed ground idle), and fn 12 (engine rotational at flight idle) will cause the EAU to illuminate the TPETS engine instrument panel EAU VIB lamp.

47. Vibration Components Checkout.

Support Equipment Required

Part No./Type Designation	Nomenclature
---	Multimeter, digital

NOTE

Steps a thru t are performed when support equipment electrical power is applied and the engine is not running.

		Yes	No
a.	Set EAU/HMT mounting rack EAU/DEC switch to the EAU position and go to step b.		
b.	Using the HMT, display GV_02, GV_11, GV_12, and GVIB values. Are values 0.0 for each code selected?	c	u

NOTE

Additional personnel must be located at the engine in order to perform steps d, j, and p.

c.	Using small plastic–tipped hammer, tap at reduction gear unit accelerometer location. Is GVIB value other than 0.0 during tapping?	e	u
d.	Visually inspect reduction gear unit accelerometer. Is accelerometer free of damage?	f	w
e.	Visually inspect wiring harness GEAR BOX ACCELEROMETER connector. Is connector backshell tight and secure?	h	g
f.	Tighten and secure connector backshell and go to step h.		
g.	Visually inspect GEAR BOX ACCELEROMETER connector–to–left–hand wiring harness transition. Is transition secure and undamaged?	i	v
h.	Display CV_02, CV_11, CV_12, and CVIB values. Are values 0.0 for each code selected?	j	x
i.	Tap at compressor unit accelerometer location. Is CVIB value other than 0.0 during tapping?	k	x
j.	Visually inspect compressor unit accelerometer. Is accelerometer free of damage?	l	z
k.	Visually inspect wiring harness COMPRESSOR ACCELEROMETER connector. Is connector backshell tight and secure?	n	m
l.	Tighten and secure connector backshell and go to step n.		
m.	Visually inspect COMPRESSOR ACCELEROMETER connector–to–right hand wiring harness transition. Is transition secure and undamaged?	o	y
n.	Display TV_02, TV_11, TV_12, and TVIB values. Are values 0.0 for each code selected?	p	aa
o.	Tap at turbine unit accelerometer location. Is TVIB value other than 0.0 during tapping?	q	aa
p.	Visually inspect turbine unit accelerometer. Is accelerometer free of damage?	r	ab
q.	Visually inspect wiring harness TURBINE ACCELEROMETER connector. Is connector backshell tight and secure?	t	s
r.	Tighten and secure connector backshell and go to step t.		
s.	Visually inspect TURBINE ACCELEROMETER connector–to–right hand wiring harness transition. Is transition secure and undamaged?	ac	y
t.	Remove power and check GEARBOX ACCELEROMETER portion of left–hand wiring harness. Is continuity correct?	w	v
u.	Replace left–hand wiring harness (WP 081 00) and repeat from step a.	–	–
v.	Replace reduction gear unit accelerometer (paragraphs 48 and 49, this WP) and repeat from step a.	–	–

47. Vibration Components Checkout. (cont)	Yes	No
w. Remove power and check COMPRESSOR ACCELEROMETER portion of right–hand wiring harness. Is continuity correct?	z	y
x. Replace right–hand wiring harness (WP 081 00) and repeat from step a.	–	–
y. Replace compressor unit accelerometer (paragraphs 50 and 51, this WP) and repeat from step a.	–	–
z. Remove power and check TURBINE ACCELEROMETER portion of right–hand wiring harness. Is continuity correct?	ab	y
aa. Replace turbine unit accelerometer (paragraphs 52 and 53, this WP) and repeat from step a.	–	–
ab. Start engine (WP 023 00), run at 100% flight idle, and go to step ad.		
ac. Check TPETS vibration meters (WP 023 00). Are vibrations within limits?	af	ae
ad. Troubleshoot engine vibration (WP 025 00) and repeat from step a.	–	–

NOTE

Excessive reduction gear unit vibration (GVIB signals) may be caused by propeller blade passage ground effect. This effect can be confirmed by high vibration values at GV_04 if values do not exceed GVIB value.

ae. Using the HMT, display values for codes listed in table 9. Do HMT values exceed values listed in table 9?	ag	al
af. Perform engine shutdown (WP 023 00) and check accelerometer hardware (figure 17). Is hardware loose?	ah	aj
ag. Secure loose hardware, torque to correct values, and go to step ai. (QA)		
ah. Start engine (WP 023 00) and repeat from step af. Do HMT values exceed limits?	aj	al
ai. Perform engine shutdown (WP 023 00) and go to step ak.	–	–
aj. Replace applicable accelerometer (paragraphs 48 thru 53, this WP) and repeat from step a.	–	–
ak. Vibration components checkout complete. If integration of vibration signals is to be checked, perform EAU checkout procedures (paragraph 70, this WP).	–	–

Table 9. HMT Display Codes and Values (EAU version 5.1 and earlier)

Propeller Rotation at 18.4 Hz	High Speed Ground Idle (97%) Engine Rotation at 230.0 Hz	Flight Idle (100%) Engine Rotation at 237.3 Hz
(GV_02) 1.0	(GV_11) 2.2	(GV_12) 2.2
(CV_02) 1.0	(CV_11) 1.7	(CV_12) 1.7
(TV_02) 1.0	(TV_11) 1.7	(TV_12) 1.7

HMT Display Codes and Values (EAU version 6.1 and later)

Propeller Rotation at 18.4 Hz	High Speed Ground Idle (97%) Engine Rotation at 230.0 Hz	Flight Idle (100%) Engine Rotation at 237.3 Hz
(GV_03) 1.0	(GV_15) 2.2	(GV_16) 2.2
(CV_03) 1.0	(CV_15) 1.7	(CV_16) 1.7
(TV_03) 1.0	(TV_15) 1.7	(TV_16) 1.7

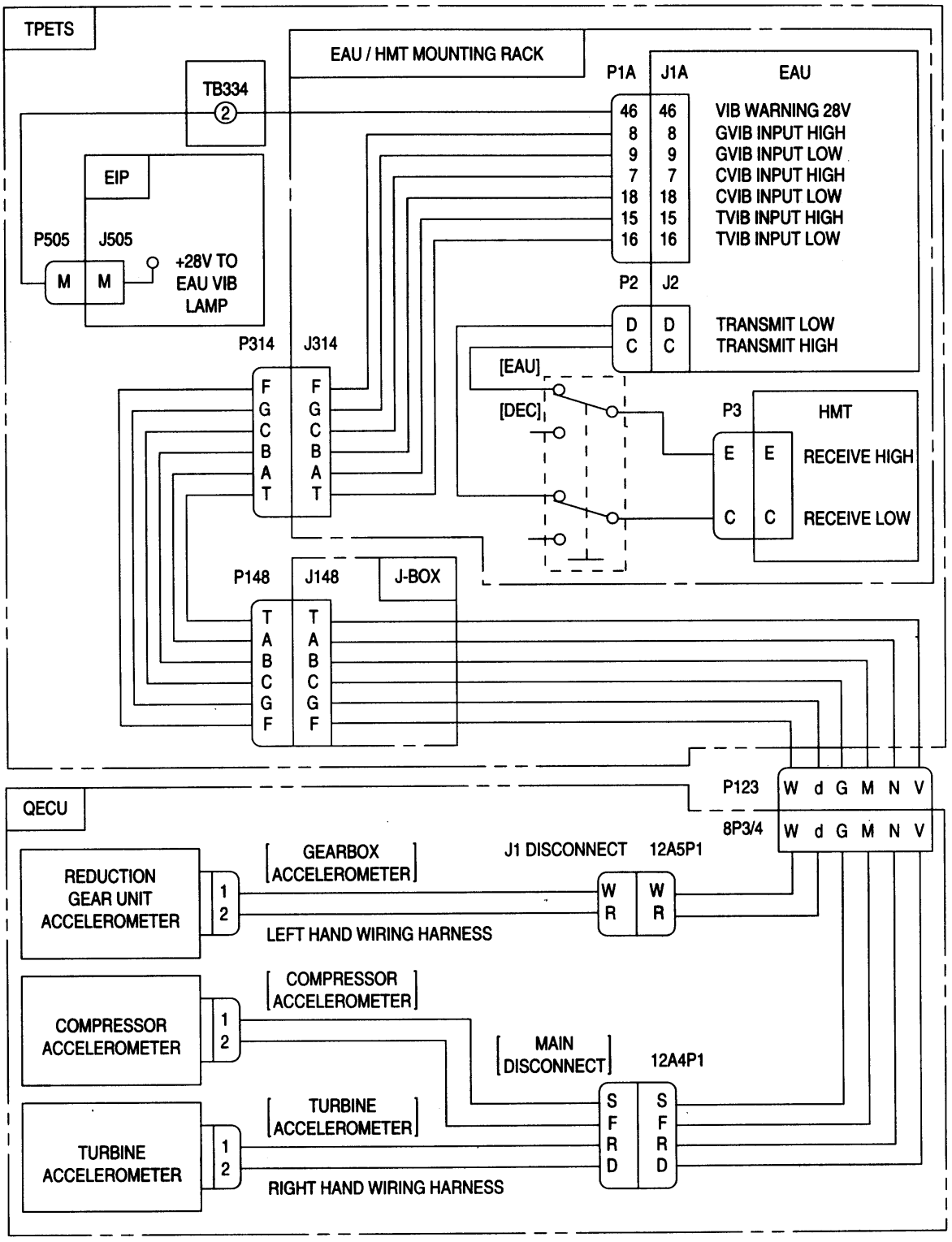

Figure 15. Vibration Components Checkout

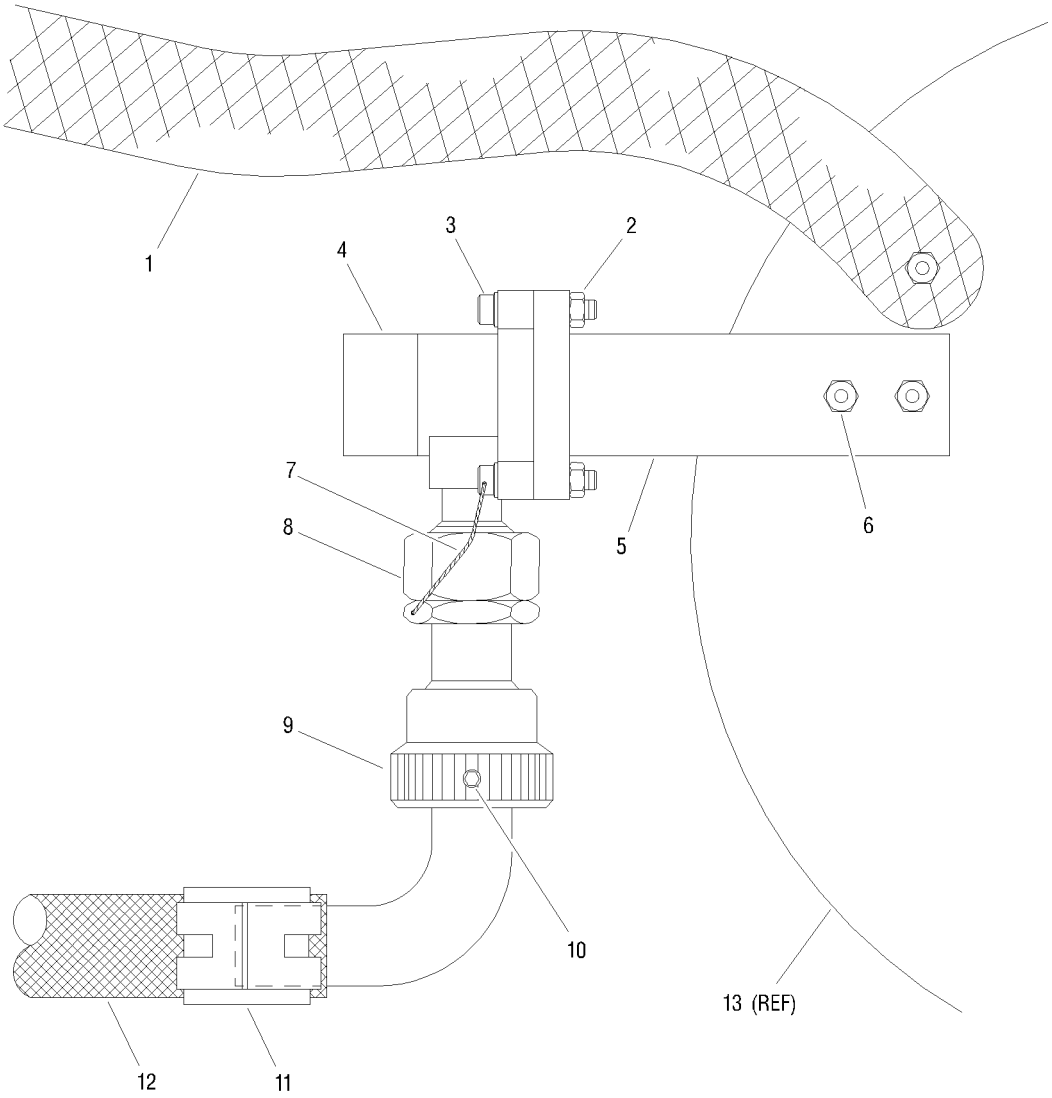

1. Ground Strap
2. Nut
3. Bolt
4. Accelerometer
5. Accelerometer Mounting Bracket
6. Nut
7. Lockwire
8. Electrical Connector
9. Connector Backshell
10. Set Screw
11. Shield Terminal Clip
12. Accelerometer Cable Branch
13. Reduction Gear Assembly, Compressor or Turbine

Figure 16. Typical Vibration Component Configuration

48. Reduction Gear Unit Accelerometer Removal.

a. Remove left–hand wiring harness GEARBOX ACCELEROMETER connector (1, figure 17) from reduction gear unit accelerometer (2).

b. Remove screws (3) and nuts (4) attaching accelerometer to reduction gear mounting bracket (5).

c. Remove accelerometer.

49. Reduction Gear Unit Accelerometer Installation.

Support Equipment Required

Part No./Type Designation	Nomenclature
–––	Wrench, torque (0 – 50 lb in.)

Materials Required

Specification No./Part No.	Nomenclature
NS165	Compound, Anti–seize (Never–Seez)
DOD–L–25681	Oil, Lubricating

a. Position reduction gear unit accelerometer (2) on reduction gear mounting bracket (5).

Dry Film Lubricant DOD–L–25681 30

b. Apply DOD–L–25681 lubricant to threads of screws (3).

c. Install screws and nuts (4) securing accelerometer to mounting bracket. Torque nuts 19 – 22 lb in. (QA)

d. Install left–hand wiring harness GEARBOX ACCELEROMETER connector (1) on reduction gear unit accelerometer (WP 081 00).

50. Compressor Unit Accelerometer Removal.

a. Remove right–hand wiring harness COMPRESSOR ACCELEROMETER connector (7, figure 17) from compressor unit accelerometer (8).

b. Remove screws (9) attaching accelerometer to compressor mounting pad.

c. Remove accelerometer.

51. Compressor Unit Accelerometer Installation.

Support Equipment Required

Part No./Type Designation	Nomenclature
–––	Wrench, torque (0 – 25 lb in.)

Materials Required

Specification No./Part No.	Nomenclature
NS165	Compound, Anti–seize (Never–Seez)

a. Position compressor unit accelerometer (8, figure 17) on compressor mounting pad.

Anti–seize Compound (Never Seez) NS165 32

b. Apply NS165 to threads of screws (9).

c. Install screws securing accelerometer to compressor mounting pad. Torque screws 13 – 17 lb in. (QA)

d. Install right hand wiring harness COMPRESSOR ACCELEROMETER connector on compressor unit accelerometer (WP 081 00).

52. Turbine Unit Accelerometer Removal.

a. Remove right–hand wiring harness TURBINE ACCELEROMETER connector (10, figure 17) from turbine unit accelerometer (11).

b. Remove screws (12) and nuts (13) attaching accelerometer to turbine mounting bracket (14).

c. Remove accelerometer.

53. Turbine Unit Accelerometer Installation.

Support Equipment Required

Part No./Type Designation	Nomenclature
–––	Wrench, torque (0 – 25 lb in.)

Materials Required

Specification No./Part No.	Nomenclature
NS165	Compound, Anti–seize (Never–Seez)

a. Position turbine unit accelerometer (11, figure 17) on turbine mounting bracket (14).

Anti–seize Compound (Never Seez) NS165 32

b. Apply NS165 to threads of screws.

c. Install screws (12) and nuts (13) securing accelerometer to turbine mounting bracket. Torque nuts 19 – 22 lb in. (QA)

d. Install right–hand wiring harness TURBINE ACCELEROMETER connector (10) on turbine accelerometer (WP 081 00).

54. **ENGINE FURNISHED EQUIPMENT**.

55. DIGITAL ELECTRONIC TRIM CONTROL (DETC) (figure 18). The DETC receives seven engine control signals (PLA, CIT, CIP, PS7, N1, N2, and TMT). The DETC processes N1 and N2 to provide the RPM and SHP signals. The DETC processes TMT to provide the CTMT signal. Using the RS–422 bus, the DETC sends eight control signals (PLA, CIT, CIP, PS7, RPM, SHP, TMT, and CTMT) to the EAU for EMS use. Status of this data can be displayed by a 12–bit word (table 10). The DETC operates in three selected modes (off, limiting, and controlling). In the off mode, DETC DC power is removed, eliminating control signal outputs to the EAU. In the limiting mode, the DETC sends outputs to the EAU while limiting SHP, TMT, and RPM to predetermined values. In the controlling mode, the DETC sends outputs to the EAU while providing a linear horsepower schedule based on CIT, CIP, and PS7. Advisory and caution lamp circuits provide an indication of limiting (LIMIT DEGRADE) or controlling (CONTROL DEGRADE) mode selection.

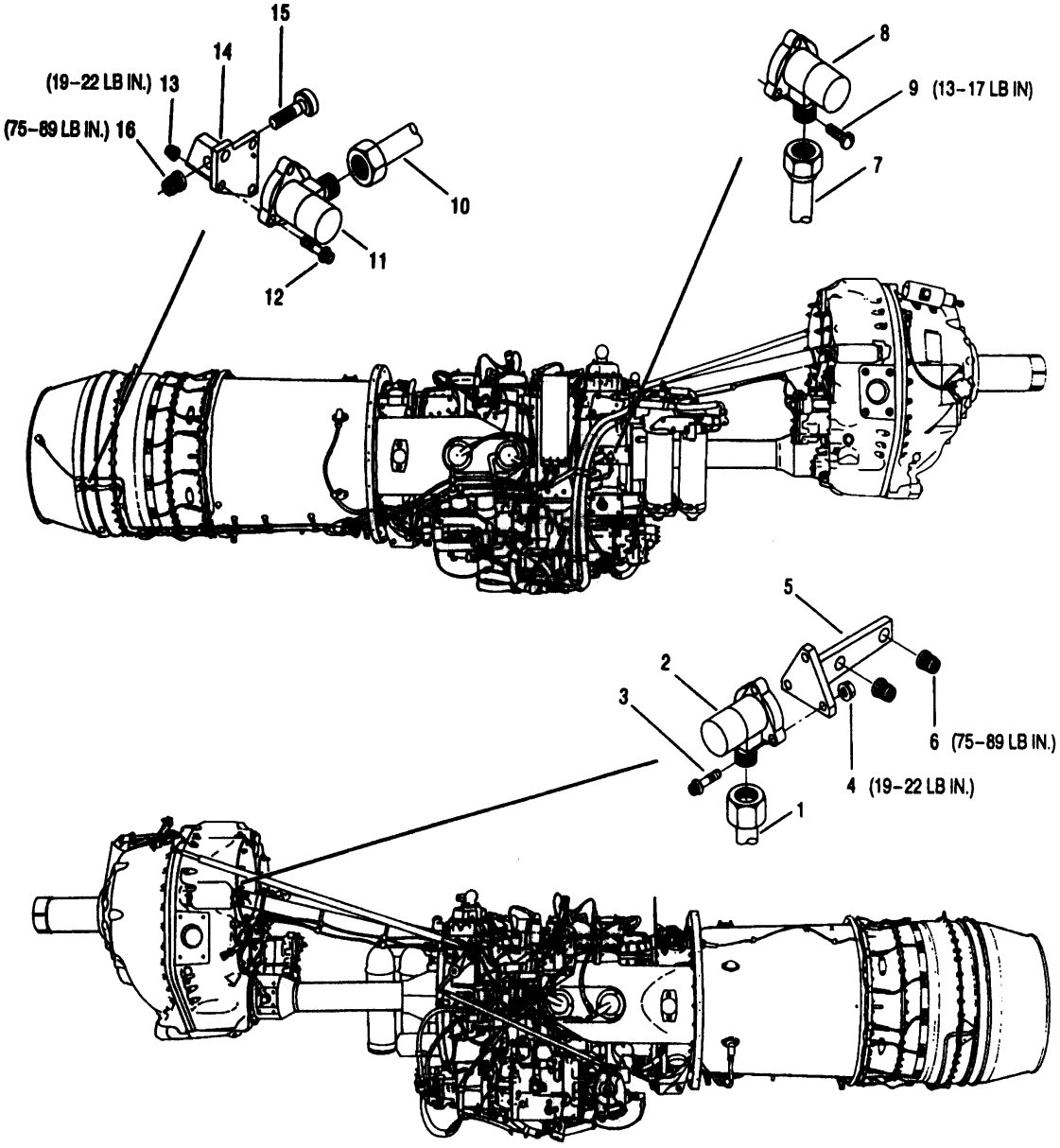

1. Gearbox Accelerometer Connector
2. Reduction Gear Unit Accelerometer
3. Screw
4. Nut
5. Reduction Gear Mounting Bracket
6. Nut
7. Compressor Accelerometer Connector
8. Compressor Unit Accelerometer
9. Screw
10. Turbine Accelerometer Connector
11. Turbine Unit Accelerometer
12. Screw
13. Nut
14. Turbine Mounting Bracket
15. Bolt
16. Nut

Figure 17. Vibration Components Replacement

Table 10. DETC Status Word Hexadecimal Format to 12–Bit Format Conversion

Step 1. Record hexadecimal (hex) status word displayed on HMT.

Example: 9000H (drop the H, it is used to indicate hex format only)

Step 2. Assign positions to each hex value.

Example:

9	0	0	0
1st Position	2nd Position	3rd Position	4th Position

Step 3. Assign decimal codes 8, 4, 2, and 1 to each position (drop the 4th position, it is not used for the 12–bit format).

Example:

8	4	2	1	8	4	2	1	8	4	2	1

Step 4. Assign the 12–bit format to cover all decimal codes.

Example:

Bit 11	Bit 10	Bit 9	Bit 8	Bit 7	Bit 6	Bit 5	Bit 4	Bit 3	Bit 2	Bit 1	Bit 0

Step 5. Using a 1, tag decimal–code bit locations to equal each hex value.

Example:

9				0				0			0H
1	0	0	1	0	0	0	0	0	0	0	0

NOTE: For hex format containing letters A thru F (A=10, B=11, C=12, D=13, E=14, and F=15)

Example: F030H =

F (15)				0				0			0H
8	4	2	1	8	4	2	1	8	4	2	1

Bit 11	Bit 10	Bit 9	Bit 8	Bit 7	Bit 6	Bit 5	Bit 4	Bit 3	Bit 2	Bit 1	Bit 0
1	1	1	1	0	0	0	0	0	0	1	1

= Status Word

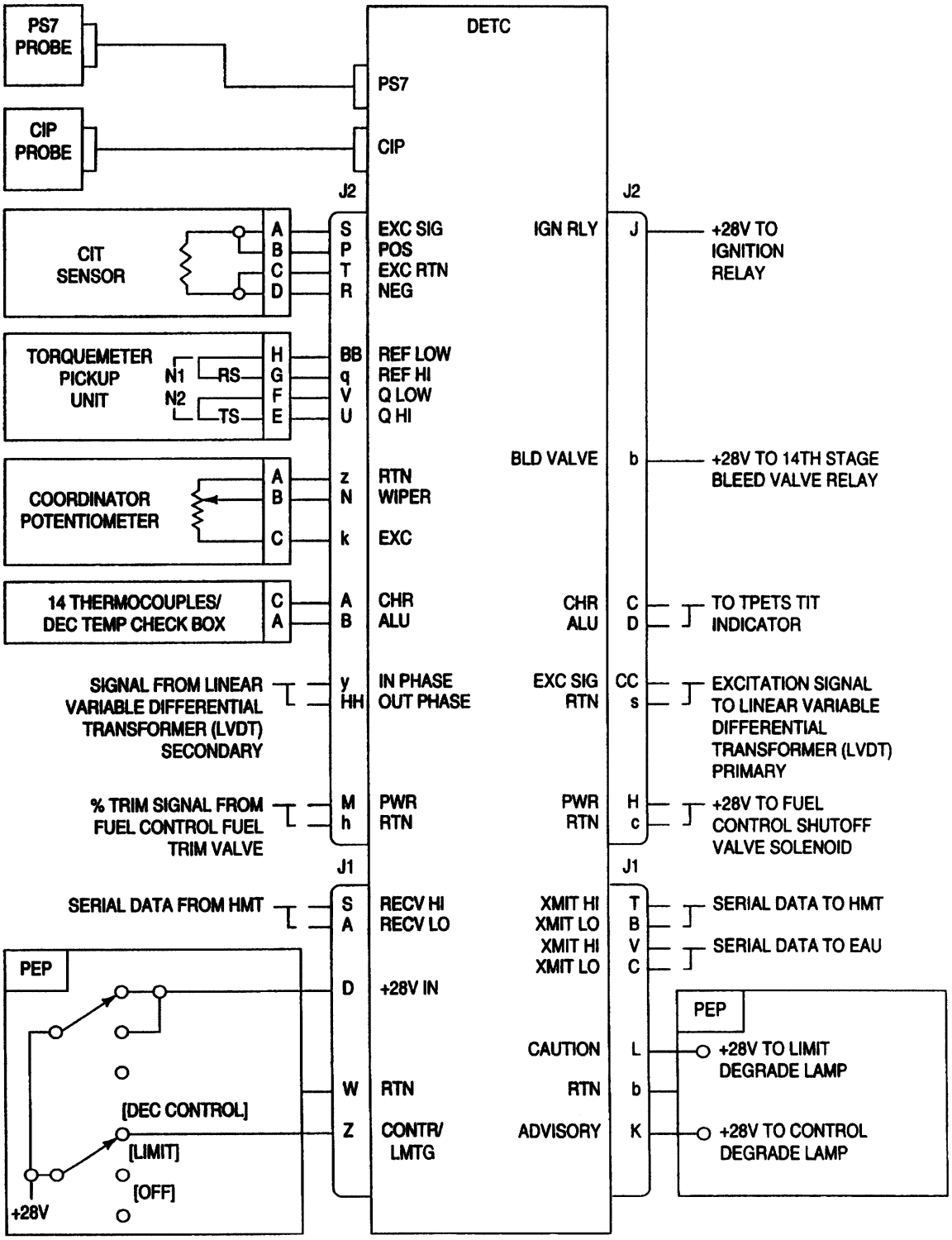

Figure 18. DETC Interface

56. DETC Checkout. (figure 19)

		Yes	No
	NOTE The following step will clear information stored in DETC fault registers.		
a.	Using the HMT, display and record DEC status words (steps g and h) and go to step b.		
b.	Perform DETC calibration (WP 022 00). Can calibration be performed?	c	q
c.	Perform DETC torque calibration (WP 023 00). Can calibration be performed?	d	q
d.	Perform DETC check (WP 023 00). Can check be performed?	e	q
e.	Set peculiar engine panel DEC mode select switch to the LIMIT position. Is LIMIT DEGRADE lamp illuminated?	f	q
f.	Set DEC CONTROL switch to the OFF position. Is CONTROL DEGRADE lamp illuminated?	g	q
g.	Using the HMT, display DEC Status Word 2 (DEC2) and convert to 12–bit format (table 10). Is Bit 11 zero?	h	q
h.	Display DEC Status Word 1 (DEC1) and convert to 12–bit format. Is Bit 11 zero?	i	r
i.	Is Bit 10 zero?	j	r
j.	Is Bit 9 zero?	k	r
k.	Is Bit 8 zero?	l	s
l.	Is Bit 7 zero?	m	t
m.	Is Bit 6 zero?	n	u
n.	Is Bit 5 zero?	o	v
o.	Is Bit 4 zero?	p	w
p.	Is Bit 3 zero?	y	x
	NOTE Contaminated DETC connectors J1 and J2 may cause signal failures. Cleaning of these connectors may produce correct test results.		
q.	Replace DETC (paragraphs 57 and 58, this WP) and repeat from step a.	–	–
r.	Perform RPM components checkout (paragraph 22, this WP) and repeat from step a.	–	–
s.	Perform CIP components checkout (paragraph 13, this WP) and repeat from step a.	–	–
t.	Perform PS7 components checkout (paragraph 30, this WP) and repeat from step a.	–	–
u.	Perform CTMT components checkout (paragraph 28, this WP) and repeat from step a.	–	–
v.	Perform CIT components checkout (paragraph 9, this WP) and repeat from step a.	–	–
w.	Perform PLA components checkout (paragraph 26, this WP) and repeat from step a.	–	–
x.	Perform SHP components checkout (paragraph 24, this WP) and repeat from step a.	–	–
y.	DETC checkout complete. If integration of control signals is to be checked, perform EAU checkout procedures (paragraph 70, this WP).	–	–

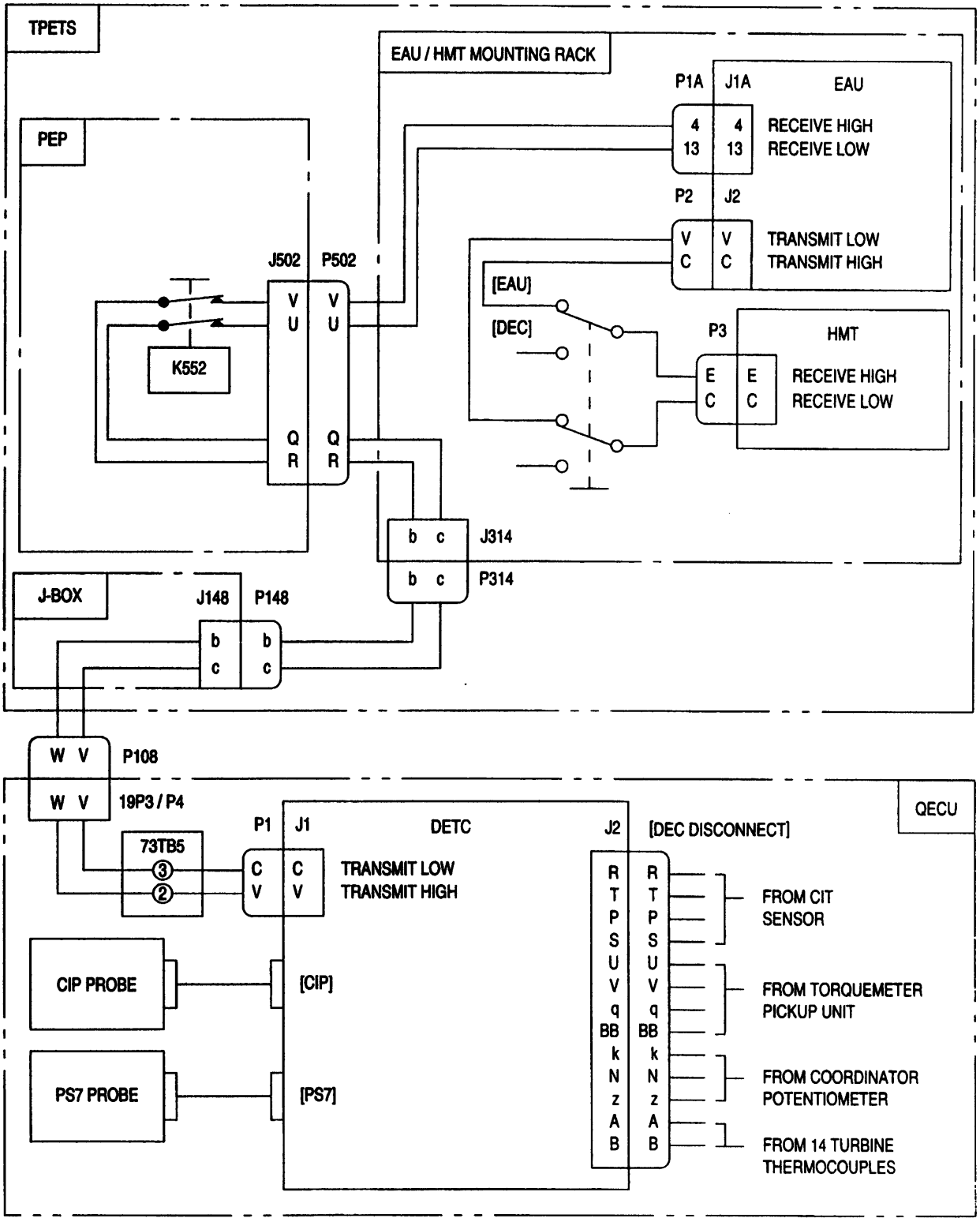

Figure 19. DETC Checkout

57. DETC Removal.

a. Remove screw (5, figure 20) and washer (4) attaching ground jumper (6) terminal to lower cowl (7).

b. Remove interconnecting wiring harness (2) connector from DETC (1).

c. Remove airframe wiring harness (9) connector P1 from DETC.

d. Remove fuel control tee–to–DETC hose (8) from DETC.

e. Remove bulkhead fitting–to–DETC hose (3) from DETC.

f. Remove bolts (11) and washers (10) attaching DETC to lower cowl.

g. Remove DETC.

58. DETC Installation.

Support Equipment Required

Part No./Type Designation	Nomenclature
–––	Wrench, torque (0 – 200 lb in.)

Materials Required

Specification No./Part No.	Nomenclature
MS20995N32	Lockwire, 0.032 in.

a. Position DETC (1, figure 20) on lower cowl (7) with connectors facing rear.

b. Install bolts (11) and washers (10) fingertight.

CAUTION

DETC structural damage may occur if movement on bolt pattern can not be attained.

c. Assure DETC can move 0.200 in. in each of three mutually perpendicular directions.

d. Torque bolts 70 – 85 lb in. and lockwire. (QA)

e. Install bulkhead fitting–to–DETC hose (3) on DETC PS7 fitting (paragraph 33, this WP).

f. Install fuel control tee–to–DETC hose (8) on DETC CIP fitting (paragraph 33, this WP).

g. Install wiring harness (9) connector P1 to DETC connector J1 (WP 081 00).

h. Install wiring harness (2) connector to DETC connector J2 (WP 081 00).

i. Install screw (5) and washer (4) securing ground jumper (6) terminal to lower cowl.

59. ENGINE ANALYZER UNIT (EAU) (figure 21). The EAU is a microprocessor–based computer pre–programmed to monitor engine functions; detect and indicate engine malfunctions; and process, store, and record engine data. The EAU operates on +28 volt aircraft power (+16 to +29 volts). When +28 volt power is interrupted, an internal battery provides continued power (+3.67 volts) to the EAU real–time clock and nonvolatile memory. Life–cycle battery operation is approximately 700 hours. The EAU incorporates built–in–test (BIT) to evaluate internal functions and external sensor conditions. In order to function properly, the EAU must receive valid control signals. The DETC provides eight control signals (CIT, CIP, RPM, SHP, PLA, PS7, TMT, and CTMT) for EAU and EMS use. The EAU also receives seven EMS signals (CDT, CDP, GVIB, CVIB, TVIB, WOW, and PRS) from dedicated sensors. A combination of control signals and EMS signals enables progressive modes of EAU operation. Critical EAU and engine functions are monitored for immediate warning. On 5.1 and earlier version EAU's, there are three warning flags (EMS FAULT, MAINT ADVISORY, and TAPE FULL) which provide electro–mechanical indications when tripped (white displayed). When the data has been analyzed, faults are cleared and conditions are correct, the flags can be manually reset. On 6.1 and later version EAU's, there are two LED indicators (MEMORY FULL and BUSY) which provide optical indications during the power up post– or pre–flight inspection when tripped. When the data has been analyzed, faults are cleared and conditions are correct, the indicators will automatically reset. The 5.1 and earlier version EAU's use a magnetic tape to record detailed event and engine data. The 6.1 and later EAU's use a PCMCIA Flash Memory Card to record detailed event and engine data. Regardless of which version of EAU is being used, the data is downloaded daily and analyzed. Warning lamps provide remote indication of high vibration levels.

60. EAU Modes of Operation. Refer to table 4. In addition to the internal real–time–clock signal, the EAU must receive valid RPM and PLA control signals from the DETC and a valid WOW signal from the TPETS in order to establish EAU modes of operation. When modes of operation are progressively detected, the EAU is capable of performing EMS functions.

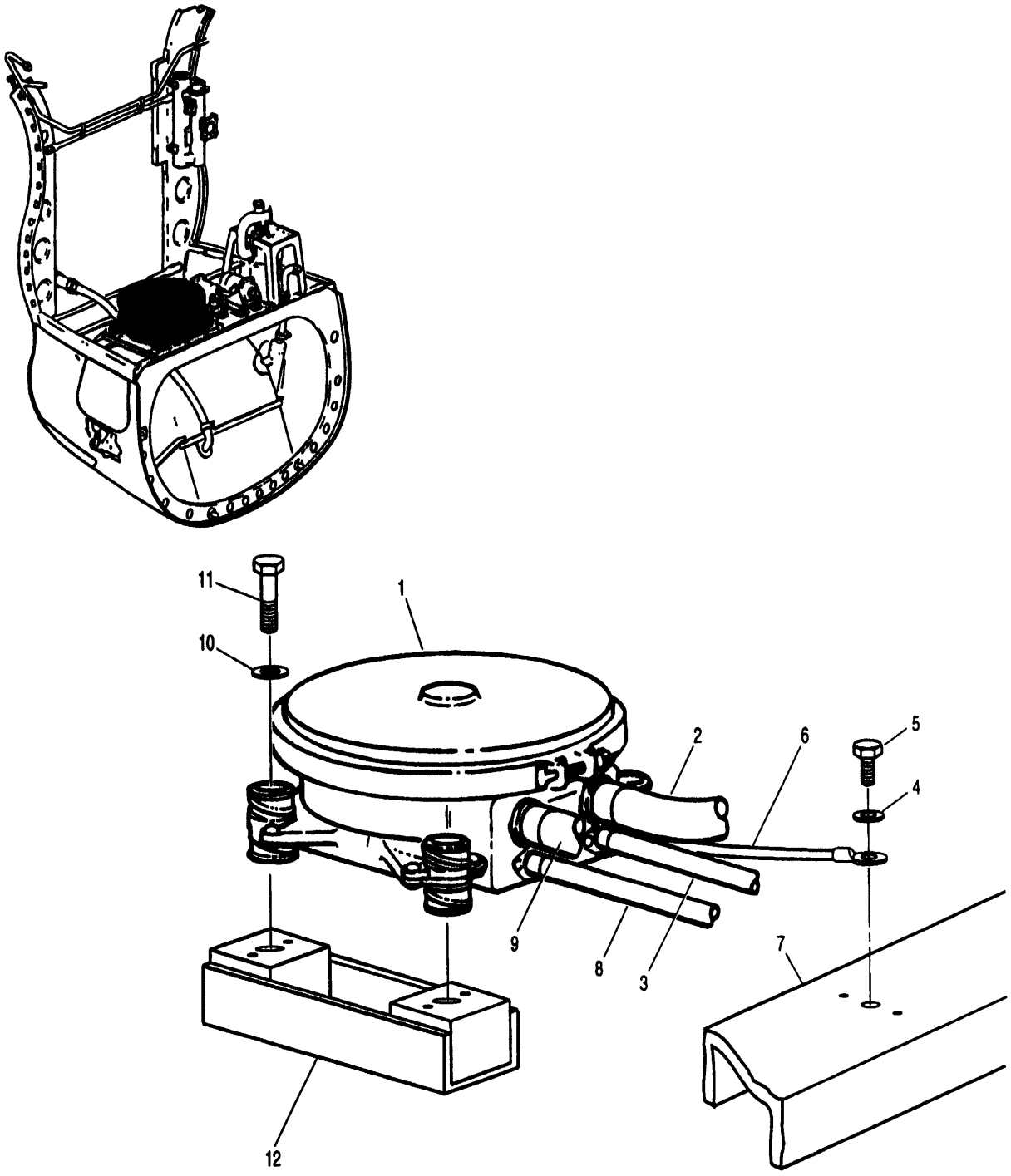

1. DETC
2. Interconnecting Wiring Harness
3. Bulkhead Fitting–To–DETC Hose
4. Washer
5. Screw
6. Ground Jumper
7. Lower Cowl Aft Bulkhead
8. Fuel Control Tee–To–DETC Hose
9. Airframe Wiring Harness
10. Washer
11. Bolt
12. Lower Cowl Mounting Base

Figure 20. DETC Replacement

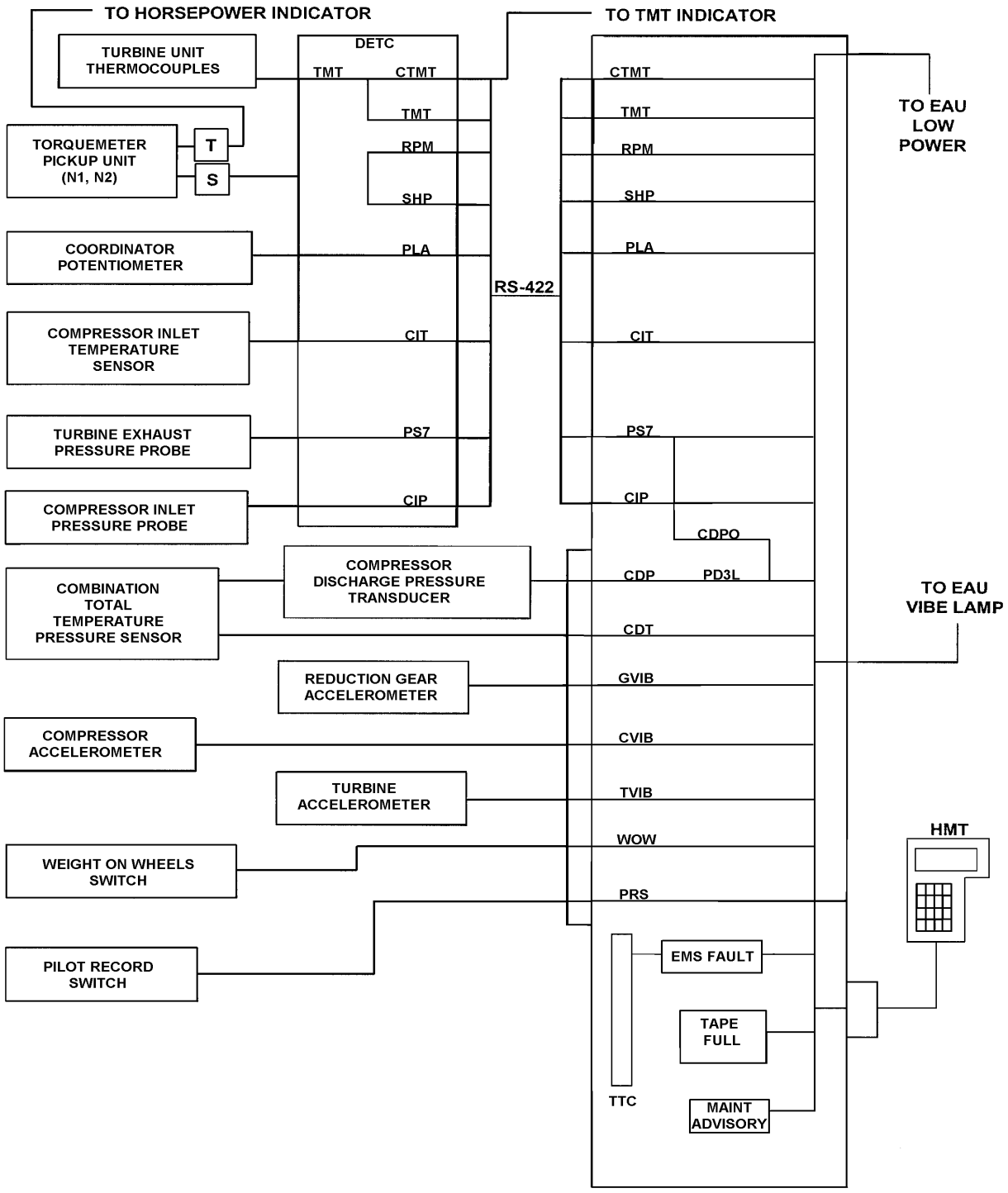

Figure 21. Elements of EMS Sensing, Indicating, and Recording (Sheet 1 of 2)

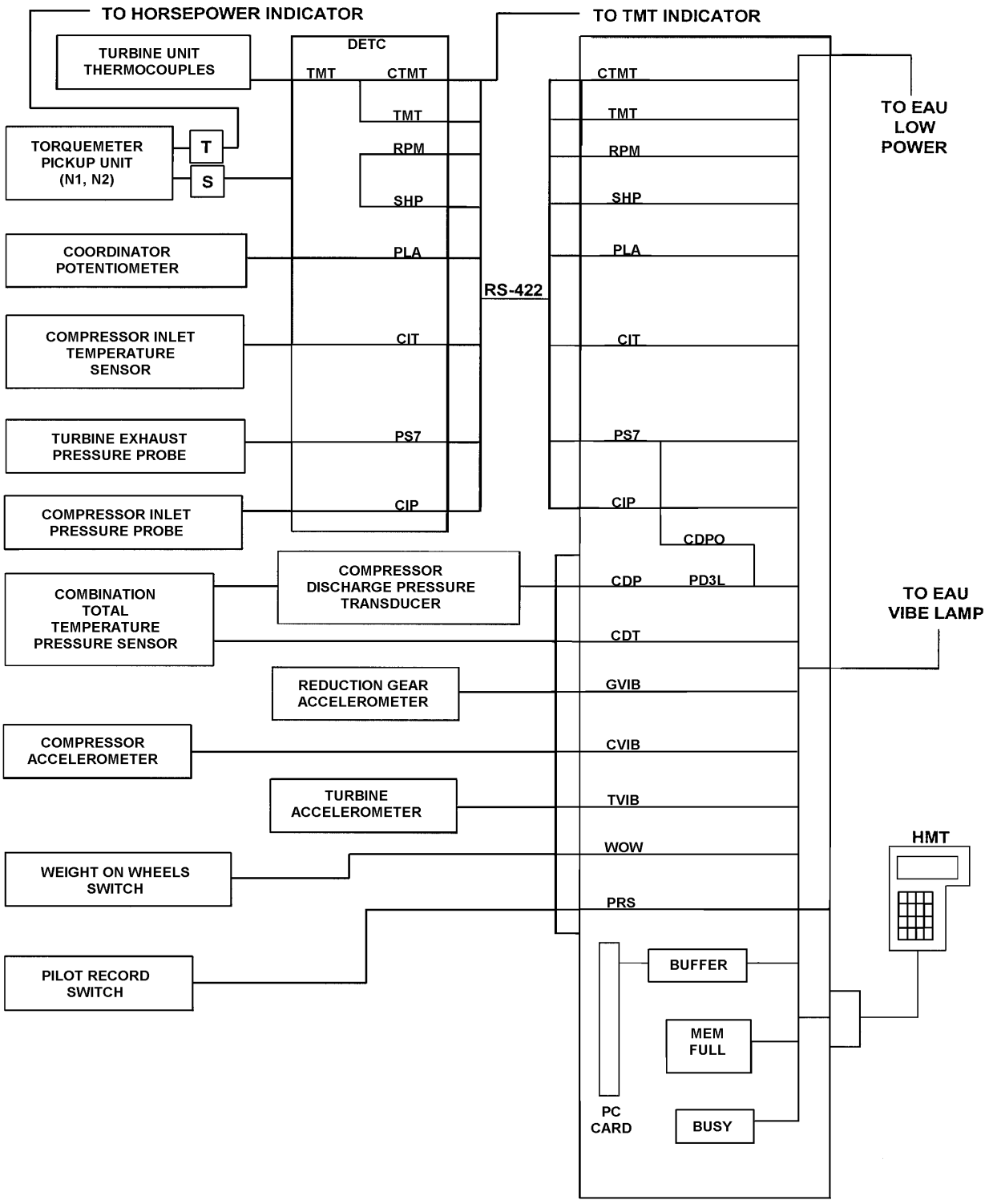

Figure 21. Elements of EMS Sensing, Indicating, and Recording (Sheet 2 of 2)

61. Parameter Exceedance. Refer to tables 1, 5,11,12, and 13. During engine operation, the EAU continuously monitors various groups of signals to assure pre–determined limits are not exceeded. Valid signal values (four seconds of pre–exceedance data) is temporarily stored into volatile memory. When an exceedance is detected, the four seconds of pre–exceedance data, the exceedance data, and eight seconds of post–exceedance data is sent to nonvolatile memory for storage. The EAU is capable of storing 21 exceedances in nonvolatile memory. Logic within the EAU determines when to store data and when to issue warning lamp signals. The HMT can be used to display the last 10 exceedances. Refer to HMT exceedance mode (WP 010 00).

62. EAU BIT. The EAU incorporates three BITs. The HMT can be used to display EAU BIT status. Refer to HMT display mode commands (table 14).

63. Power–On BIT. The EAU performs power–on BIT when +28 volt power has been absent for more than 30 minutes. Absences of +28 volts for less than 30 minute periods is considered, by the EAU, to be normal power interruptions. Power–on BIT checks RAM, watchdog timer, RS–232C port, CPU, memory I/O, and EPROM.

64. Periodic BIT. Periodic BIT is performed automatically. Periodic BIT checks ROM, RAM, CPU, EPROM, A/D converters, recording media interface, recording media status, battery life, CDT sensor and CDP transducer.

65. Initiated BIT. Initiated BIT contains tests that are not performed by the other BITs. Initiated BIT is started by the HMT command IBIT. Initiated BIT checks data recording media writing and reading status, EAU memory and EAU vibration conditioning circuits.

66. EMS FAULT Flag. Based on events and events duration (intermittent failures and hard failures), periodic BIT monitors EMS–dedicated input signal parameters. Accumulated and persistent faults trip the fault flag. When tripped, the flag cannot be reset until the end of flight mode is detected or EAU +28 volt power is removed.

67. MAINT ADVISORY Flag. Using pre–determined values, the EAU monitors and compares integrated signal parameters. An out–of–parameter event trips the advisory flag. When tripped, the flag cannot be reset until the tape is fully used (bottom–of–tape indication is detected), or until the HMT erase tape command (ERASE) is received, or until the EAU nonvolatile memory is corrupted (internal battery is removed).

68. DATA MEDIA INDICATIONS. There are two types of data media in use with the EAU's. Version 5.1 and earlier EAU's use a magnetic tape system. Version 6.1 and later EAU's use a PCMCIA Flash Memory Card. The status of the version 6.1 EAU indicators must be checked during the portion of the pre– or post–flight when power is on the aircraft.

a. TAPE FULL Flag. When three of the four tape tracks are used, the tape full flag is tripped. When tripped, the flag cannot be reset until the tape is fully used (end–of–tape indicator detected), until the HMT erase command (ERASE) is received, or until the EAU non–volatile memory is erased (battery removed). However, to capture the most recent data in the event of a serious mishap, the data recording will continue even if it means that previous data is overwritten.

b. MEMORY FULL INDICATOR. The yellow LED will illuminate when there is 4MB or less memory left on the PC Card. The yellow LED will flash when the PC Card is completely full, when the PC Card is missing, or when the drive door has been left open. Like the tape, the PC Card data will be overwritten by newer data if the card is not replaced before completely full.

c. BUSY INDICATOR. The green LED will illuminate when data is being written to the PC Card.

69. DATA MEDIA. There are two types of data media in use with the EAU's. Version 5.1 and earlier EAU's use a magnetic tape system. Version 6.1 and later EAU's use a PCMCIA Flash Memory Card.

a. TAPE TRANSPORT CARTRIDGE (TTC). The TTC is a hermetically sealed unit that contains 154 feet of reel–to–reel magnetic tape. The TTC also contains a tape transport motor, a read/write head, and an end–of–tape sensor. Approximately 45 minutes of continuously recorded data can be stored on the 4–track tape. Information stored on TTC tape includes engine exceedances (up to 21 exceedances), life usage data, time, Julian date, engine serial number, and aircraft serial number (or engine test number). After each engine test, the TTC is removed from the EAU and sent to the ground station for data analysis.

b. PCMCIA FLASH MEMORY CARD (PC Card). The PC Card is a credit card–sized flash memory data storage device. It interfaces with the EAU and ground station in exactly the same manner as a diskette. Sizes in use range from 10MB size and up to 40MB and higher.

Table 11. Reduction Gear Unit Vibration Exceedance Events

	GVIB (18.4 Hz)	GVIB (230.0 Hz)	GVIB (237.3 Hz)
Limit	>1.2 IPS	>2.6 IPS	>2.6 IPS
Events	>2 Seconds	>2 Seconds	>2 Seconds
L EAU Reason	Word 2 Bit 4	Word 2 Bit 3	Word 2 Bit 3
R EAU Reason	Word 4 Bit 4	Word 4 Bit 3	Word 4 Bit 3

Table 12. Compressor Unit Vibration Exceedance Events

	CVIB (18.4 Hz)	CVIB (230.0 Hz)	CVIB (237.3 Hz)
Limit	>1.2 IPS	>1.9 IPS	>1.9 IPS
Events	>2 Seconds	>2 Seconds	>2 Seconds
L EAU Reason	Word 2 Bit 4	Word 2 Bit 3	Word 2 Bit 3
R EAU Reason	Word 4 Bit 4	Word 4 Bit 3	Word 4 Bit 3

Table 13. Turbine Unit Vibration Exceedance Events

	TVIB (18.4 Hz)	TVIB (230.0 Hz)	TVIB (237.3 Hz)
Limit	>3.5 IPS	>1.9 IPS	>1.9 IPS
Events	>5 Seconds	>2 Seconds	>2 Seconds
L EAU Reason	Word 2 Bit 4	Word 2 Bit 3	Word 2 Bit 3
R EAU Reason	Word 4 Bit 4	Word 4 Bit 3	Word 4 Bit 3

Table 14. HMT Display/Change Command Matrix – B

DEC Status 1 – DEC1 Left or Right

C2 =	0	1	2	3	4	5	6	7	8	9	A	B	C	D	E	F		
									X	X	X	X	X	X	X	X	N1 Fault	b3
					X	X	X	X					X	X	X	X	N2 Fault	b2
			X	X			X	X			X	X			X	X	CIP Fault	b1
		X		X		X		X		X		X		X		X	PS7 Fault	b0
C1 =	0	1	2	3	4	5	6	7	8	9	A	B	C	D	E	F		
									X	X	X	X	X	X	X	X	TMT/WFREQ Fault	b3
					X	X	X	X					X	X	X	X	ATMT Fault	b2
			X	X			X	X			X	X			X	X	CIT Fault	b1
		X		X		X		X		X		X		X		X	PLA Fault	b0
C0 =	0	1	2	3	4	5	6	7	8	9	A	B	C	D	E	F		
									X	X	X	X	X	X	X	X	Horse Power Fault	b3
					X	X	X	X					X	X	X	X	LVDT Fault	b2
			X	X			X	X			X	X			X	X	Torque Motor Current Fault	b1
		X		X		X		X		X		X		X		X	Speed Delta Fault	b0

DEC Status 2 – DEC2 Left or Right

C3 =	0	1	2	3	4	5	6	7	8	9	A	B	C	D	E	F	
									X	X	X	X	X	X	X	X	Control (8–F)/Limiting Mode (0–7)
					X	X	X	X					X	X	X	X	WF Current Required Check Failed
			X	X			X	X			X	X			X	X	WF LVDT Tracking Fault Status Failed
		X		X		X		X		X		X		X		X	Real–Time Task Timeout Failed
C2 =	0	1	2	3	4	5	6	7	8	9	A	B	C	D	E	F	
									X	X	X	X	X	X	X	X	RAM Status Failed
					X	X	X	X					X	X	X	X	Fatal FBFA1 Status Failed
			X	X			X	X			X	X			X	X	DEC CPU Status Failed
		X		X		X		X		X		X		X		X	Background Iteration Status Failed
C1 =	0	1	2	3	4	5	6	7	8	9	A	B	C	D	E	F	
									X	X	X	X	X	X	X	X	DEC EEPROM Write Status Failed
					X	X	X	X					X	X	X	X	Initialization Status Failed
			X	X			X	X			X	X			X	X	Watchdog Initialization Status Failed
		X		X		X		X		X		X		X		X	Watchdog Fault Status Failed
C0 =	0	1	2	3	4	5	6	7	8	9	A	B	C	D	E	F	
									X	X	X	X	X	X	X	X	Foreground Iteration Status Failed
					X	X	X	X					X	X	X	X	Program Checksum Failed
			X	X			X	X			X	X			X	X	CIP PROM Checksum Failed
		X		X		X		X		X		X		X		X	PS7 PROM Checksum Failed

16 BIT Format																
BIT =	1	2	3	4	5	6	7	8	9	10	11	12	13	14	15	16
C=	X	X	X		11	10	9	8	7	6	5	4	3	2	1	0

Discrete Word 1 – DW1

C11	=	0 – Good	1 – Failed	EMS Status
C10	=	0 – False	1 – True	Right DEC Detected Fault
C9	=	0 – False	1 – True	Left DEC Detected Fault
C8	=	0 – False	1 – True	EAU Detected Fault
C7	=	0 – Off	1 – On	Take–Off Low Power Lamp
C6	=	0 – Off	1 – On	Vibration Right Lamp
C5	=	0 – Off	1 – On	Vibration Left Lamp
C4	=	0 – Off	1 – ON	Maintenance Advisory Flag
C3	=	0 – Not–Reached	1 – Reached	EOT Flag/Card Memory Full Flag
C2	=	0 – False	1 – True	EMS Fault Flag
C1	=	0 – Inactive	1 – Active	Pilot Record Switch
C0	=	0 – Inactive	1 – Active	WOW Switch State

EAU Status Word 1 – E1 Where a description is shown as x/y the x applies to 5.1 and the y applies to 6.1

C11	=	0 – Not Active	1 – Active	EAU External Failure
C10	=	0 – Not Active	1 – Active	EAU Internal Failure
C9	=	0 – Not Active	1 – Active	EAU Serial COM Failure
C8	=	0 – Not Active	1 – Active	DP/SP System Failure/CPU Board Failure
C7	=	0 – Not Active	1 – Active	DP Hardware Failure/Power Supply Board Failure
C6	=	0 – Not Active	1 – Active	DP Software Failure/Acquisition Board Failure
C5	=	0 – Not Active	1 – Active	SP Hardware Failure/Mother Board Failure
C4	=	0 – Not Active	1 – Active	SP Software Failure/Capacitor Block Failure
C3	=	0 – Not Active	1 – Active	Right DEC/EAU COM Failure
C2	=	0 – Not Active	1 – Active	Left DEC/EAU COM Failure
C1	=	0 – Not Active	1 – Active	Right DEC Range Failure
C0	=	0 – Not Active	1 – Active	Left DEC Range Failure

EAU Status Word 2 – E2 Where a description is shown as x/y the x applies to 5.1 and the y applies to 6.1

C11	=	0 – Not Active	1 – Active	PRS Discrete Failure
C10	=	0 – Not Active	1 – Active	WOW Discrete Failure
C9	=	0 – Not Active	1 – Active	RTVIB Sensor Failure
C8	=	0 – Not Active	1 – Active	LTVIB Sensor Failure
C7	=	0 – Not Active	1 – Active	RGVIB Sensor Failure
C6	=	0 – Not Active	1 – Active	LGVIB Sensor Failure
C5	=	0 – Not Active	1 – Active	RCVIB Sensor Failure
C4	=	0 – Not Active	1 – Active	LCVIB Sensor Failure
C3	=	0 – Not Active	1 – Active	RCDP Sensor Failure
C2	=	0 – Not Active	1 – Active	LCDP Sensor Failure
C1	=	0 – Not Active	1 – Active	RCDT Sensor Failure
C0	=	0 – Not Active	1 – Active	LCDT Sensor Failure

16 BIT Format																
BIT =	1	2	3	4	5	6	7	8	9	10	11	12	13	14	15	16
C=	X	X	X		11	10	9	8	7	6	5	4	3	2	1	0

EAU Status Word 3 – E3 Where a description is shown as x/y the x applies to 5.1 and the y applies to 6.1

C11	=	0 – Not Active	1 – Active	Tape Failure/PCMCIA Card not inserted
C10	=	0 – Not Active	1 – Active	CPU Board Failure/Battery Low Warning
C9	=	0 – Not Active	1 – Active	RTC Board Failure/Right N1 Sensor Failure
C8	=	0 – Not Active	1 – Active	DSP #2 Board Failure/Left N1 Sensor Failure
C7	=	0 – Not Active	1 – Active	ICA #2 Board Failure/PCMCIA Card Open
C6	=	0 – Not Active	1 – Active	DSP #1 Board Failure/PCMCIA Card Failure
C5	=	0 – Not Active	1 – Active	ICA #1 Board Failure/PCMCIA Card 4meg Remaining
C4	=	0 – Not Active	1 – Active	Mother Board Failure/Spare
C3	=	0 – Not Active	1 – Active	Battery Low Failure/Spare
C2	=	0 – Not Active	1 – Active	EAU System Bus Failure/Spare
C1	=	0 – Not Active	1 – Active	HMT COM Failure/Spare
C0	=	0 – Not Active	1 – Active	TTC Not Present Failure/Spare

EAU Status Word 4 – E4 Where a description is shown as x/y the x applies to 5.1 and the y applies to 6.1

C11	=	0 – Not Active	1 – Active	Z8002 Processor Failure/TMS320C31 microprocessor Failure
C10	=	0 – Not Active	1 – Active	CPU ROM Failure/CPU–EPLD Interrupt Failure
C9	=	0 – Not Active	1 – Active	CPU RAM Failure/CPU ROM Checksum Failure
C8	=	0 – Not Active	1 – Active	CPU Timer Failure/CPU RAM–NVRAM Error Failure
C7	=	0 – Not Active	1 – Active	CPU Interrupt Controller Failure/CPU DUART#1 Failure
C6	=	0 – Not Active	1 – Active	CPU Watchdog Failure/CPU DUART#2 Failure
C5	=	0 – Not Active	1 – Active	CPU RS–422A Failure/CPU Real time Clock Failure
C4	=	0 – Not Active	1 – Active	CPU RS–232C Failure/CPU Watchdog Failure
C3	=	0 – Not Active	1 – Active	ATE COM Failure/CPU EEPROM Failure
C2	=	0 – N/A	1 – N/A	Spare Always Zero/CPU Bus Failure
C1	=	0 – N/A	1 – N/A	Spare Always Zero
C0	=	0 – N/A	1 – N/A	Spare Always Zero

EAU Status Word 5 – E5 Where a description is shown as x/y the x applies to 5.1 and the y applies to 6.1

C11	=	0 – Not Active	1 – Active	NVRAM Failure/+5 V DC Power Failure
C10	=	0 – Not Active	1 – Active	A/D Failure/–5 V DC Power Failure
C9	=	0 – Not Active	1 – Active	RTC Failure/+15 V DC Power Failure
C8	=	0 – Not Active	1 – Active	Maintenance Flag Failure/–15 V DC Power Failure
C7	=	0 – Not Active	1 – Active	Tape Full Flag Failure/Right VIBE Lamp Failure
C6	=	0 – Not Active	1 – Active	EMS Fault Failure/Left VIBE Lamp Failure
C5	=	0 – Not Active	1 – Active	Spare #3 Flag Failure/Takeoff Low Power Failure
C4	=	0 – Not Active	1 – Active	Spare #2 Flag Failure/CDP Excitation Failure
C3	=	0 – Not Active	1 – Active	Spare #1 Flag Failure/Spare
C2	=	0 – N/A	1 – N/A	Spare Always Zero
C1	=	0 – N/A	1 – N/A	Spare Always Zero
C0	=	0 – N/A	1 – N/A	Spare Always Zero

16 BIT Format																
BIT =	1	2	3	4	5	6	7	8	9	10	11	12	13	14	15	16
C=	X	X	X		11	10	9	8	7	6	5	4	3	2	1	0

EAU Status Word 6 – E6 Where a description is shown as x/y the x applies to 5.1 and the y applies to 6.1

C11	=	0 – Not Active	1 – Active	SP RAM Failure/Charge AMP RTVIB Failure
C10	=	0 – Not Active	1 – Active	SP CPU #2 Failure/Charge AMP LTVIB Failure
C9	=	0 – Not Active	1 – Active	SP CPU #1 Failure/Charge AMP RGVIB Failure
C8	=	0 – Not Active	1 – Active	Tape Interface Hardware Failure/Charge AMP LGVIB Failure
C7	=	0 – Not Active	1 – Active	DPS High Accuracy A/D Failure/Charge AMP RCVIB Failure
C6	=	0 – Not Active	1 – Active	DPS Low Accuracy A/D Failure/Charge AMP LCVIB Failure
C5	=	0 – Not Active	1 – Active	RVIB Lamp Driver Failure/PCMCIA Card Voltage Failure
C4	=	0 – Not Active	1 – Active	LVIB Lamp Driver Failure/Mother Board Bus Failure
C3	=	0 – Not Active	1 – Active	CDP Driver Failure/Spare
C2	=	0 – Not Active	1 – Active	TOLP Lamp Driver Failure/Spare
C1	=	0 – N/A	1 – N/A	Spare Always Zero
C0	=	0 – Not Active	1 – Active	Tape Buffer Overflow Failure/Spare

EAU Status Word 7 – E7 Where a description is shown as x/y the x applies to 5.1 and the y applies to 6.1

C11	=	0 – N/A	1 – N/A	Spare Always Zero/Analog FIFO Sequence Error
C10	=	0 – N/A	1 – N/A	Spare Always Zero/VIB FIFO Sequence Error
C9	=	0 – Not Active	1 – Active	RTVIB Channel Failure/Analog A–D Sampling Error
C8	=	0 – Not Active	1 – Active	LTVIB Channel Failure/VIB A–D Sampling Error
C7	=	0 – Not Active	1 – Active	RGVIB Channel Failure/Right N1 Sampling Error
C6	=	0 – Not Active	1 – Active	LGVIB Channel Failure/Left N1 Sampling Error
C5	=	0 – Not Active	1 – Active	RCVIB Channel Failure/RTVIB Channel Error
C4	=	0 – Not Active	1 – Active	LCVIB Channel Failure/RTVIB Channel Error
C3	=	0 – N/A	1 – N/A	Spare Always Zero/RGVIB Channel Error
C2	=	0 – N/A	1 – N/A	Spare Always Zero/LGVIB Channel Error
C1	=	0 – Not Active	1 – Active	RCDT Channel Failure/RCVIB Channel Error
C0	=	0 – Not Active	1 – Active	LCDT Channel Failure/LCVIB Channel Error

EAU Status Word 8 – E8 Where a description is shown as x/y the x applies to 5.1 and the y applies to 6.1

C11	=	0 – N/A	1 – N/A	Analog MUX Failure
C10	=	0 – N/A	1 – N/A	Vibration MUX Failure
C9	=	0 – Not Active	1 – Active	Busy LED Failure
C8	=	0 – Not Active	1 – Active	Memory Full LED Failure
C7	=	0 – Not Active	1 – Active	Space#1 LED Failure
C6	=	0 – Not Active	1 – Active	Space#2 LED Failure
C5	=	0 – Not Active	1 – Active	Acquisition Bus Failure
C4	=	0 – Not Active	1 – Active	Acquisition Timer1 Failure
C3	=	0 – N/A	1 – N/A	Acquisition Timer2 Failure
C2	=	0 – N/A	1 – N/A	CDT – BIT Excitation Failure
C1	=	0 – Not Active	1 – Active	EAU Temperature Warning
C0	=	0 – Not Active	1 – Active	Spare
Status word 8 is new with V6.1				

Reason Word 1 – RW1 Where a description is shown as x/y the x applies to 5.1 and the y applies to 6.1

C11	=	0 – Not Active	1 – Active	Pilot Record Request
C10	=	0 – Not Active	1 – Active	EAU Error Log
C9	=	0 – Not Active	1 – Active	End–of–Flight/Last Engine Shutdown
C8	=	0 – Not Active	1 – Active	Right Trend Request
C7	=	0 – Not Active	1 – Active	Left Trend Request
C6	=	0 – Not Active	1 – Active	Lift Off
C5	=	0 – Not Active	1 – Active	Take Off Right Engine
C4	=	0 – Not Active	1 – Active	Take Off Left Engine
C3	=	0 – Not Active	1 – Active	Ground Idle Right Engine
C2	=	0 – Not Active	1 – Active	Ground Idle Left Engine
C1	=	0 – Not Active	1 – Active	Start Mode Right Engine
C0	=	0 – Not Active	1 – Active	Start Mode Left Engine

16 BIT Format																
BIT =	1	2	3	4	5	6	7	8	9	10	11	12	13	14	15	16
C=	X	X	X		11	10	9	8	7	6	5	4	3	2	1	0

Reason Word 2 – RW2 Where a description is shown as x/y the x applies to 5.1 and the y applies to 6.1

C11	=	0 – Not Active	1 – Active	LTMT above 1639 for 1 second
C10	=	0 – Not Active	1 – Active	LTMT above 1589 for 3 seconds
C9	=	0 – N/A	1 – N/A	Spare Always Zero/LTMTC passed thru 805 C
C8	=	0 – Not Active	1 – Active	Left Error Continuous Record
C7	=	0 – Not Active	1 – Active	LSHP above 6000 for 1 second
C6	=	0 – Not Active	1 – Active	LSHP above 5125 for 4 seconds
C5	=	0 – Not Active	1 – Active	Left Vibration Continuous Record
C4	=	0 – Not Active	1 – Active	LPROP High Vibration
C3	=	0 – Not Active	1 – Active	Left High Vibration
C2	=	0 – Not Active	1 – Active	LRPM above 108% for 1 second
C1	=	0 – Not Active	1 – Active	LRPM above 102% for 2 minutes
C0	=	0 – Not Active	1 – Active	Left Engine Hot Start

Reason Word 3 – RW3 Where a description is shown as x/y the x applies to 5.1 and the y applies to 6.1

C11	=	0 – Not Active	1 – Active	Left CDP Compensated
C10	=	0 – Not Active	1 – Active	Left Engine Sensor Recovery
C9	=	0 – Not Active	1 – Active	Left Engine Data Validity
C8	=	0 – Not Active	1 – Active	Left Engine Long Start
C7	=	0 – Not Active	1 – Active	Left Engines HSGI Shutdowns > 20
C6	=	0 – Not Active	1 – Active	Left Engine DEC Log
C5	=	0 – Not Active	1 – Active	Left Engine DEC Failure
C4	=	0 – Not Active	1 – Active	Left Engine Flameout
C3	=	0 – Not Active	1 – Active	Left Engine DEC Recovery
C2	=	0 – Not Active	1 – Active	Left Engine Low RPM
C1	=	0 – Not Active	1 – Active	Left Engine Surge Detected
C0	=	0 – Not Active	1 – Active	Left Engine Low Power

Reason Word 4 – RW4 Where a description is shown as x/y the x applies to 5.1 and the y applies to 6.1

C11	=	0 – Not Active	1 – Active	RTMT above 1639 for 1 second
C10	=	0 – Not Active	1 – Active	RTMT above 1589 for 3 seconds
C9	=	0 – N/A	1 – N/A	Spare Always Zero/RTMTC passed thru 805 C
C8	=	0 – Not Active	1 – Active	Right Error Continuous Record
C7	=	0 – Not Active	1 – Active	RSHP above 6000 for 1 second
C6	=	0 – Not Active	1 – Active	RSHP above 5125 for 4 seconds
C5	=	0 – Not Active	1 – Active	Right Vibration Continuous Record
C4	=	0 – Not Active	1 – Active	RPROP High Vibration
C3	=	0 – Not Active	1 – Active	Right High Vibration
C2	=	0 – Not Active	1 – Active	RRPM above 108% for 1 second
C1	=	0 – Not Active	1 – Active	RRPM above 102% for 2 minutes
C0	=	0 – Not Active	1 – Active	Right Engine Hot Start

16 BIT Format																
BIT =	1	2	3	4	5	6	7	8	9	10	11	12	13	14	15	16
C=	X	X	X		11	10	9	8	7	6	5	4	3	2	1	0

Reason Word 5 – RW5 Where a description is shown as x/y the x applies to 5.1 and the y applies to 6.1

C11	=	0 – Not Active	1 – Active	Right CDP Compensated
C10	=	0 – Not Active	1 – Active	Right Engine Sensor Recovery
C9	=	0 – Not Active	1 – Active	Right Engine Data Validity
C8	=	0 – Not Active	1 – Active	Right Engine Long Start
C7	=	0 – Not Active	1 – Active	Right Engines HSGI Shutdowns > 20
C6	=	0 – Not Active	1 – Active	Right Engine DEC Log
C5	=	0 – Not Active	1 – Active	Right Engine DEC Failure
C4	=	0 – Not Active	1 – Active	Right Engine Flameout
C3	=	0 – Not Active	1 – Active	Right Engine DEC Recovery
C2	=	0 – Not Active	1 – Active	Right Engine Low RPM
C1	=	0 – Not Active	1 – Active	Right Engine Surge Detected
C0	=	0 – Not Active	1 – Active	Right Engine Low Power

Reason Word 6 – RW6 Where a description is shown as x/y the x applies to 5.1 and the y applies to 6.1

C11	=	0 – N/A	1 – N/A	Spare Always Zero
C10	=	0 – N/A	1 – N/A	RPM drop 99% thru 96%
C9	=	0 – Not Active	1 – Active	One Hour
C8	=	0 – Not Active	1 – Active	PLA Change
C7	=	0 – Not Active	1 – Active	PS7 Change
C6	=	0 – Not Active	1 – Active	Touch Down
C5	=	0 – Not Active	1 – Active	Record One Block (HMT REC)
C4	=	0 – Not Active	1 – Active	Record Continuous (HMT RECC)
C3	=	0 – Not Active	1 – Active	System Error Continuous Record
C2	=	0 – Not Active	1 – Active	Doc. Data Continuous Record
C1	=	0 – Not Active	1 – Active	Documentary Record
C0	=	0 – Not Active	1 – Active	Continuous Record Normal Frame

Reason Word 7 – RW7 **Reason words 7 thru 10 are new as of V6.1**

C11	=	0 – Not Active	1 – Active	Left GV03 reaches 1.0 ips
C10	=	0 – Not Active	1 – Active	Left GV04 reaches 1.0 ips
C9	=	0 – Not Active	1 – Active	Left GV10 reaches 1.0 ips
C8	=	0 – Not Active	1 – Active	Left GV12 reaches 1.0 ips
C7	=	0 – Not Active	1 – Active	Left GV13 reaches 1.0 ips
C6	=	0 – Not Active	1 – Active	Left GV15 reaches 1.0 ips
C5	=	0 – Not Active	1 – Active	Left GV16 reaches 1.0 ips
C4	=	0 – Not Active	1 – Active	Left CV03 reaches 1.0 ips
C3	=	0 – Not Active	1 – Active	Left CV04 reaches 1.0 ips
C2	=	0 – Not Active	1 – Active	Left CV10 reaches 1.0 ips
C1	=	0 – Not Active	1 – Active	Left CV12 reaches 1.0 ips
C0	=	0 – Not Active	1 – Active	Left CV13 reaches 1.0 ips

Reason Word 8 – RW8

C11	=	0 – N/A	1 – N/A	Left CV15 reaches 1.0 ips
C10	=	0 – N/A	1 – N/A	Left CV16 reaches 1.0 ips
C9	=	0 – Not Active	1 – Active	Left TV03 reaches 1.0 ips
C8	=	0 – Not Active	1 – Active	Left TV04 reaches 1.0 ips
C7	=	0 – Not Active	1 – Active	Left TV10 reaches 1.0 ips
C6	=	0 – Not Active	1 – Active	Left TV12 reaches 1.0 ips
C5	=	0 – Not Active	1 – Active	Left TV13 reaches 1.0 ips
C4	=	0 – Not Active	1 – Active	Left TV15 reaches 1.0 ips
C3	=	0 – Not Active	1 – Active	Left TV16 reaches 1.0 ips
C2	=	0 – Not Active	1 – Active	Left/Right PS7 differential greater than .5 psi for more than 5 sec.
C1	=	0 – Not Active	1 – Active	Left/Right RPM differential greater than 3% for more than 5 sec.
C0	=	0 – Not Active	1 – Active	Left/Right CIT differential greater than 3 deg F for more than 5 sec.

Reason Word 9 – RW9

C11	=	0 – N/A	1 – N/A	Right GV03 reaches 1.0 ips
C10	=	0 – N/A	1 – N/A	Right GV04 reaches 1.0 ips
C9	=	0 – Not Active	1 – Active	Right GV10 reaches 1.0 ips
C8	=	0 – Not Active	1 – Active	Right GV12 reaches 1.0 ips
C7	=	0 – Not Active	1 – Active	Right GV13 reaches 1.0 ips
C6	=	0 – Not Active	1 – Active	Right GV15 reaches 1.0 ips
C5	=	0 – Not Active	1 – Active	Right GV16 reaches 1.0 ips
C4	=	0 – Not Active	1 – Active	Right CV03 reaches 1.0 ips
C3	=	0 – Not Active	1 – Active	Right CV04 reaches 1.0 ips
C2	=	0 – Not Active	1 – Active	Right CV10 reaches 1.0 ips
C1	=	0 – Not Active	1 – Active	Right CV12 reaches 1.0 ips
C0	=	0 – Not Active	1 – Active	Right CV13 reaches 1.0 ips

Reason Word 10 – RW10

C11	=	0 – N/A	1 – N/A	Left CV15 reaches 1.0 ips
C10	=	0 – N/A	1 – N/A	Left CV16 reaches 1.0 ips
C9	=	0 – Not Active	1 – Active	Left TV03 reaches 1.0 ips
C8	=	0 – Not Active	1 – Active	Left TV04 reaches 1.0 ips
C7	=	0 – Not Active	1 – Active	Left TV10 reaches 1.0 ips
C6	=	0 – Not Active	1 – Active	Left TV12 reaches 1.0 ips
C5	=	0 – Not Active	1 – Active	Left TV13 reaches 1.0 ips
C4	=	0 – Not Active	1 – Active	Left TV15 reaches 1.0 ips
C3	=	0 – Not Active	1 – Active	Left TV16 reaches 1.0 ips
C2	=	0 – Not Active	1 – Active	Left/Right PS7 differential greater than .5 psi for more than 5 sec.
C1	=	0 – Not Active	1 – Active	Left/Right RPM differential greater than 3% for more than 5 sec.
C0	=	0 – Not Active	1 – Active	Left/Right CIT differential greater than 3 deg F for more than 5 sec.

Record Subframe – RCS

C11	=	0 – Not Active	1 – Active	Documentary Header Subframe Log
C10	=	0 – Not Active	1 – Active	System Error Subframe Log
C9	=	0 – Not Active	1 – Active	Engine #2 (LI) Subframe Log
C8	=	0 – Not Active	1 – Active	Engine #3 (RI) Subframe Log
C7	=	0 – Not Active	1 – Active	Engine #1 (LO) Subframe Log
C6	=	0 – Not Active	1 – Active	Engine #4 (RO) Subframe Log
C5	=	0 – Not Active	1 – Active	Normal Inside VIB Subframe Log
C4	=	0 – Not Active	1 – Active	Left Inside VIB Subframe Log
C3	=	0 – Not Active	1 – Active	Right Inside VIB Subframe Log
C2	=	0 – Not Active	1 – Active	Normal Outside VIB Subframe Log
C1	=	0 – Not Active	1 – Active	Left Outside VIB Subframe Log
C0	=	0 – Not Active	1 – Active	Right Outside VIB Subframe Log

16 BIT Format																
BIT =	1	2	3	4	5	6	7	8	9	10	11	12	13	14	15	16
C=	X	X	X		11	10	9	8	7	6	5	4	3	2	1	0

Tape Status 1 – TP1

C11	=	0 – Active	1 – Not Active	Tape in BOTW Zone
C10	=	0 – Active	1 – Not Active	Tape in BOT Zone
C9	=	0 – Active	1 – Not Active	Tape in EOTW Zone
C8	=	0 – Active	1 – Not Active	Tape in EOT Zone
C7	=	0 – Active	1 – Not Active	Tape Transport Cartridge Present
C6	=	0 – Active	1 – Not Active	Write Enable (WEN)
C5	=	0 – Active	1 – Not Active	Tape in Motion (STRT)
C4	=	0 – Not Active	1 – Active	Tape Speed slow (SPD)
C3	=	0 – Not Active	1 – Active	Tape Direction (DIR)
C2	=	0 – Active	1 – Not Active	Tape Track Code BIT 1 (TS2)
C1	=	0 – Active	1 – Not Active	Tape Track Code BIT 0 (TS1)
C0	=	0 – Not Active	1 – Active	Tape Power On (ENBL)

70. EAU Checkout. (figure 22)

		Yes	No
	NOTE This section includes the procedure for checking out all versions of the EAU. Steps u through bd apply to the 5.1 or earlier version EAU. Steps be through cx apply to the 6.1 and later version EAU.		
a.	Before going to the TPETS, review the Flight Summary Report, BIT Summary Report, Engine Dump Report and/or the Vibration Dump Report from the EMS for the most recent flight available. Also for a 6.1 or later EAU, review the EAU Status Report. It is likely that by applying EMS data to the following procedure a diagnosis can be reached without going to the aircraft and thus save time and reduce exposure to safety hazards. Does the data indicate a problem?	b	cy
b.	Does the data indicate a problem with the TTC?	do	c
c.	Does the data indicate a problem with the PC Card?	dp	d
d.	Does the data indicate a problem with the EAU internal circuit boards?	dt	e
e.	Does the data indicate a problem with the EAU communications with the left DETC?	dc	f
f.	Does the data indicate a problem with the EAU communications with the right DETC?	dd	g
g.	Does the data indicate a problem with the EAU communications with the HMT?	du	h
h.	Does the data indicate a problem inside the left DETC?	cz	i
i.	Does the data indicate a problem inside the right DETC?	da	j
j.	Does the data indicate a problem with the signals feeding into the left DETC?	cz	k
k.	Does the data indicate a problem with the signals feeding into the right DETC?	da	l
l.	Does the data indicate a problem with the WOW switch?	dl	m
m.	Does the data indicate a problem with the EAU Battery?	dn	n
n.	Does the data indicate a problem with the ENG MON switch?	dm	o
o.	Does the data indicate a problem with the CDT system?	df, dg	p
p.	Does the data indicate a problem with the CDP system?	dh, di	q
q.	Does the data indicate a problem with the Vibration system on the left engine?	dj	r
r.	Does the data indicate a problem with the Vibration system on the right engine?	dk	s
	NOTE The following steps are performed when support equipment electrical power is applied and when engines are not running.		
s.	Assure a blank RFI tape transport cartridge (TTC) or a PC Card is installed in the EAU and a printout of the BIT Summary Report from a recent flight is available for comparison with HMT output.		
t.	Connect HMT to the EAU connector J2.		
u.	Is the HMT communicating with the EAU?	v	du
v.	Is the EAU being tested a version 6.1 or later?	v	du

70. EAU Checkout (cont)

	Yes	No
NOTE	bj	w

EAU status should not be determined by initiated BIT results displayed on the HMT at the time of connection. EAU status should be determined only by using the following steps.

w.	Using the HMT, examine the initialization data.		
x.	Is the initialization data correct?	y	dv
y.	Using the HMT, perform a BOT and an initiated BIT (IBIT). Did a BIT PASSED message display in the HMT window when complete?	z	dt
z.	Display EAU Discrete Word 1 (DW1) and compare HMT display with bit location format as follows:		

Discrete Word 1	Bit 11	Bit 10	Bit 9	Bit 8	Bit 7	Bit 6	Bit 5	Bit 4	Bit 3	Bit 2	Bit 1	Bit 0

aa.	Does the HMT display match the BIT Summary Report printout?	aj	dw
ab.	Is Bit 2 or 11 active?	ac	aj
ac.	Is Bit 9 active?	cz	ad
ad.	Is Bit 10 active?	da	ae
ae.	Is Bit 8 active?	af	aj
af.	Is Bit 3 active?	dq	ag
ag.	Is Bit 0 inactive (zero)?	ah	dl
ah.	Operate the ENG MON switch in the cockpit. Does Bit 1 change states from 0 to 1 and then back to 0?	ai	dm
ai.	Is Bit 4, 5, 6 or 7 active?	dt	aj
aj.	Display EAU Status Word 1 (EAU1) and compare HMT display with bit location format as follows:		

EAU Status Word 1	Bit 11	Bit 10	Bit 9	Bit 8	Bit 7	Bit 6	Bit 5	Bit 4	Bit 3	Bit 2	Bit 1	Bit 0

ak.	Does the HMT display match the BIT Summary Report printout?	at	dx
al.	Is Bit 10 active?	ar	am
am.	Is Bit 11 active?	at	an
an.	Is Bit 0 active (reads other than zero)?	cz	ao
ao.	Is Bit 1 active (reads other than zero)?	da	ap
ap.	Is Bit 2 active?	dc	aq
aq.	Is Bit 3 active?	dd	as
ar.	Is Bit 9 active?	du	at
as.	Is Bit 4, 5, 6, 7 or 8 active?	dt	ds
at.	Display EAU Status Word 2 (EAU2) and compare HMT display with bit location format as follows:		

EAU Status Word 2	Bit 11	Bit 10	Bit 9	Bit 8	Bit 7	Bit 6	Bit 5	Bit 4	Bit 3	Bit 2	Bit 1	Bit 0

70. EAU Checkout (cont)	Yes	No
au. Does the HMT display match the BIT Summary Report printout?	bv	dy
av. Is Bit 0 active?	df	aw
aw. Is Bit 1 active?	dg	ax
ax. Is Bit 2 active?	dh	ay
ay Is Bit 3 active?	di	az
az. Is Bit 4, 6 or 8 active?	dj	ba
ba. Is Bit 5, 7 or 9 active?	dk	bb
bb. Is Bit 10 active?	dl	bc
bc. Is Bit 11 active?	dm	bd
bd. Display EAU Status Word 3 (EAU3) and compare HMT display with bit location format as follows:		

EAU Status Word 3	Bit 11	Bit 10	Bit 9	Bit 8	Bit 7	Bit 6	Bit 5	Bit 4	Bit 3	Bit 2	Bit 1	Bit 0

be. Does the HMT display match the BIT Summary Report printout?	ee	dz
bf. Is Bit 1 active?	du	bg
bg. Is Bit 11 active?	dq	bh
bh. Is Bit 3 active?	dn	bi
bi Is Bit 2, 4, 5, 6, 7, 8, 9 or 10 active?	dt	bj

NOTE

The results of the following process for the v6.1 EAU can be viewed in graphical format with the EAU Status Report.

NOTE

The following steps are performed when aircraft equipment electrical power is applied and when engines are not running.

bj. Using the HMT, examine the initialization data.		
bk. Is the initialization data correct?	bl	dv
bl. Using the HMT, perform a BOT and an initiated BIT (IBIT). Did a BIT PASSED message display in the HMT window when complete?	bm	dt
bm. Display EAU Discrete Word 1 (DW1) and compare HMT display with bit location format as follows:		

Discrete Word 1	Bit 11	Bit 10	Bit 9	Bit 8	Bit 7	Bit 6	Bit 5	Bit 4	Bit 3	Bit 2	Bit 1	Bit 0

bn. Does the HMT display match the BIT Summary Report printout?	bw	ea
bo. Is Bit 2 or 11 active?	bp	bw
bp. Is Bit 9 active?	cz	bq
bq. Is Bit 10 active?	da	br
br. Is Bit 8 active?	bs	bw
bs. Is Bit 3 active?	dr	bt
bt. Is Bit 0 inactive (zero)?	bu	dl

70. EAU Checkout (cont)	Yes	No
bu. Operate the ENG MON switch in the cockpit. Does Bit 1 change states from 0 to 1 and then back to 0?	bv	dm
bv. Is Bit 4, 5, 6 or 7 active?	dt	bw
bw. Display EAU Status Word 1 (EAU1) and compare HMT display with bit location format as follows:		

EAU Status Word 1	Bit 11	Bit 10	Bit 9	Bit 8	Bit 7	Bit 6	Bit 5	Bit 4	Bit 3	Bit 2	Bit 1	Bit 0

bx. Does the HMT display match the BIT Summary Report printout?	cg	eb
by. Is Bit 10 active?	cf	bz
bz. Is Bit 11 active?	cg	ca
ca. Is Bit 0 active (reads other than zero)?	cz	cb
cb. Is Bit 1 active (reads other than zero)?	da	cc
cc. Is Bit 2 active?	dc	cd
cd. Is Bit 3 active?	dd	ce
ce. Is Bit 9 active?	du	cg
cf. Is Bit 4, 5, 6, 7 or 8 active?	dt	ds
cg. Display EAU Status Word 2 (EAU2) and compare HMT display with bit location format as follows:		

EAU Status Word 2	Bit 11	Bit 10	Bit 9	Bit 8	Bit 7	Bit 6	Bit 5	Bit 4	Bit 3	Bit 2	Bit 1	Bit 0

ch. Does the HMT display match the BIT Summary Report printout?	cq	ec
ci. Is Bit 0 active?	df	cj
cj. Is Bit 1 active?	dg	ck
ck. Is Bit 2 active?	dh	cl
cl Is Bit 3 active?	di	cm
cm. Is Bit 4, 6 or 8 active?	dj	cn
cn. Is Bit 5, 7 or 9 active?	dl	co
co. Is Bit 10 active?	dk	cp
cp. Is Bit 11 active?	dm	cq
cq. Display EAU Status Word 3 (EAU3) and compare HMT display with bit location format as follows:		

EAU Status Word 3	Bit 11	Bit 10	Bit 9	Bit 8	Bit 7	Bit 6	Bit 5	Bit 4	Bit 3	Bit 2	Bit 1	Bit 0

cr. Does the HMT display match the BIT Summary Report printout?	ee	ed
cs. Is Bit 4 or 10 active?	dn	ct
ct. Is Bit 8 active?	el	cu
cu. Is Bit 9 active?	em	cv
cv. Is Bit 5 or 6 active?	dr	cw
cw. Is Bit 7 active?	ej	cw

70. EAU Checkout (cont)	Yes	No
cx. Is Bit 11 active?	ek	eg
cy. Review the reasons for doing the EAU checkout. Could the symptoms be caused by another component?	em	s
cz. Perform DETC checkout (this WP) on left DETC. Is checkout completed without failure?	l, ac, ap, br, cc	db
da. Perform DETC checkout (this WP) on right DETC. Is checkout completed without failure?	l, ac, ap, br, cc	dd
db. Replace DETC (NAVAIR 01–EAAA–2–10.1 WP). Does the problem remain?	l, dc, dd	en
dc. Check wiring and connectors (especially the upper shelf connectors) between the DETC and EAU on the left side. Are wiring and connectors clean and satisfactory?	h, as, br, cc	eo
dd. Check wiring and connectors (especially the upper shelf connectors) between the DETC and EAU on the right side. Are wiring and connectors clean and satisfactory?	i, as, br, cc	eo
de. Repair, replace or clean connectors and wiring as required. Does the problem remain?	s	en
df. Perform CDT components checkout (this WP) on the left engine. Is checkout completed without failure?	p, ax ck	en
dg. Perform CDT components checkout (this WP) on the left engine. Is checkout completed without failure?	p, ay cl	en
dh. Perform CDP components checkout (this WP) on the left engine. Is checkout completed without failure?	s, bb co	en
di. Perform CDP components checkout (this WP) on the left engine. Is checkout completed without failure?	s, bb co	en
dj. Perform vibration components checkout (this WP) on left engine system. Is checkout completed without failure?	s	en
dk. Perform vibration components checkout (this WP) on right engine system. Is checkout completed without failure?	s	en
dl. Check weight–on–wheels switch and wiring between switch and EAU. Is checkout completed without failure?	m, bc, cp	de
dm. Check PILOT RECORD (ENG MON) switch and wiring between switch and EAU. Is checkout completed without failure?	s, ba, bu, cq	en
dn. Replace EAU battery (NAVAIR 01–EAAA–2–10.1, WP 194 00) and repeat from step s. Does the problem remain?	n, dt, ct	en
do. Replace TTC and at next aircraft power up activate the PILOT RECORD (ENG MON) switch at 3 times approximately 1 minute apart. Does the problem remain?	s	en
dp. Replace PC Card and at next aircraft power up activate the PILOT RECORD (ENG MON) switch at 3 times approximately 1 minute apart. Does the problem remain?	s	en
dq. Replace TTC and repeat from step w. Does the status word remain active?	ag, bh	en
dr. Replace PC card and repeat from step bj. Does the status word remain active?	bt	en
ds. Repeat from step v. If any of the Bits remain active after the second time through go to step ds instead of v	–	–

70. EAU Checkout (cont)	Yes	No
dt. Probable EAU failure. Replace EAU (NAVAIR 01–EAAA–2–10.1 WP 194 00). Does the problem remain?	s	en
du. Perform an HMT checkout (this WP). Is checkout completed without failure?	ef, v, bg	eo
dv. Reinitialize EAU and repeat from step s. Does the EAU battery hold any initialization data the second time through?	y, bl	dn
dw. Record difference in HMT display and continue at step y.	–	–
dx. Record difference in HMT display and continue at step al.	–	–
dy. Record difference in HMT display and continue at step av.	–	–
dz. Record difference in HMT display and continue at step bf.	–	–
ea. Record difference in HMT display and continue at step bo.	–	–
eb. Record difference in HMT display and continue at step by.	–	–
ec. Record difference in HMT display and continue at step ci.	–	–
ed. Record difference in HMT display and continue at step cs.	–	–
ee. Do all the HMT displays match the BIT Summary Report printout?	eh	ei
ef. Are there any indications of an aircraft power supply problem?	eg	s
eg. Perform checkout of aircraft power supply to EAU. Is checkout completed without failure?	dt	eo
eh. Implement corrective action to defined by data analysis. Proceed to step en.	–	–
ei. Revise corrective action plan with updated data and Implement. Proceed to step en.	–	–
ej. Close PC Card door. Does the status word remain active?	dt	cw
ek. Install a PC Card or if one is already installed, remove and replace with a known RFI PC Card. Does the status word remain active?	dt	co
el. Perform RPM components checkout on left engine. Is checkout completed without failure?	dt	eo
em. Perform RPM components checkout on right engine. Is checkout completed without failure?	dt	eo
en. EAU checkout complete. If EMS operation is to be checked, perform system checkout (this WP). If EMS data is to be checked, perform EMS data check (WP 007 00) and (SUM–000).	–	–
eo. Repair/replace component/item as required. Go to step en.	–	–

Table 15. Bit Location Format

EAU Status Word 1	Bit 11	Bit 10	Bit 9	Bit 8	Bit 7	Bit 6	Bit 5	Bit 4	Bit 3	Bit 2	Bit 1	Bit 0

EAU Status Word 2	Bit 11	Bit 10	Bit 9	Bit 8	Bit 7	Bit 6	Bit 5	Bit 4	Bit 3	Bit 2	Bit 1	Bit 0

EAU Status Word 3	Bit 11	Bit 10	Bit 9	Bit 8	Bit 7	Bit 6	Bit 5	Bit 4	Bit 3	Bit 2	Bit 1	Bit 0

EAU Discrete Word 1	Bit 11	Bit 10	Bit 9	Bit 8	Bit 7	Bit 6	Bit 5	Bit 4	Bit 3	Bit 2	Bit 1	Bit 0

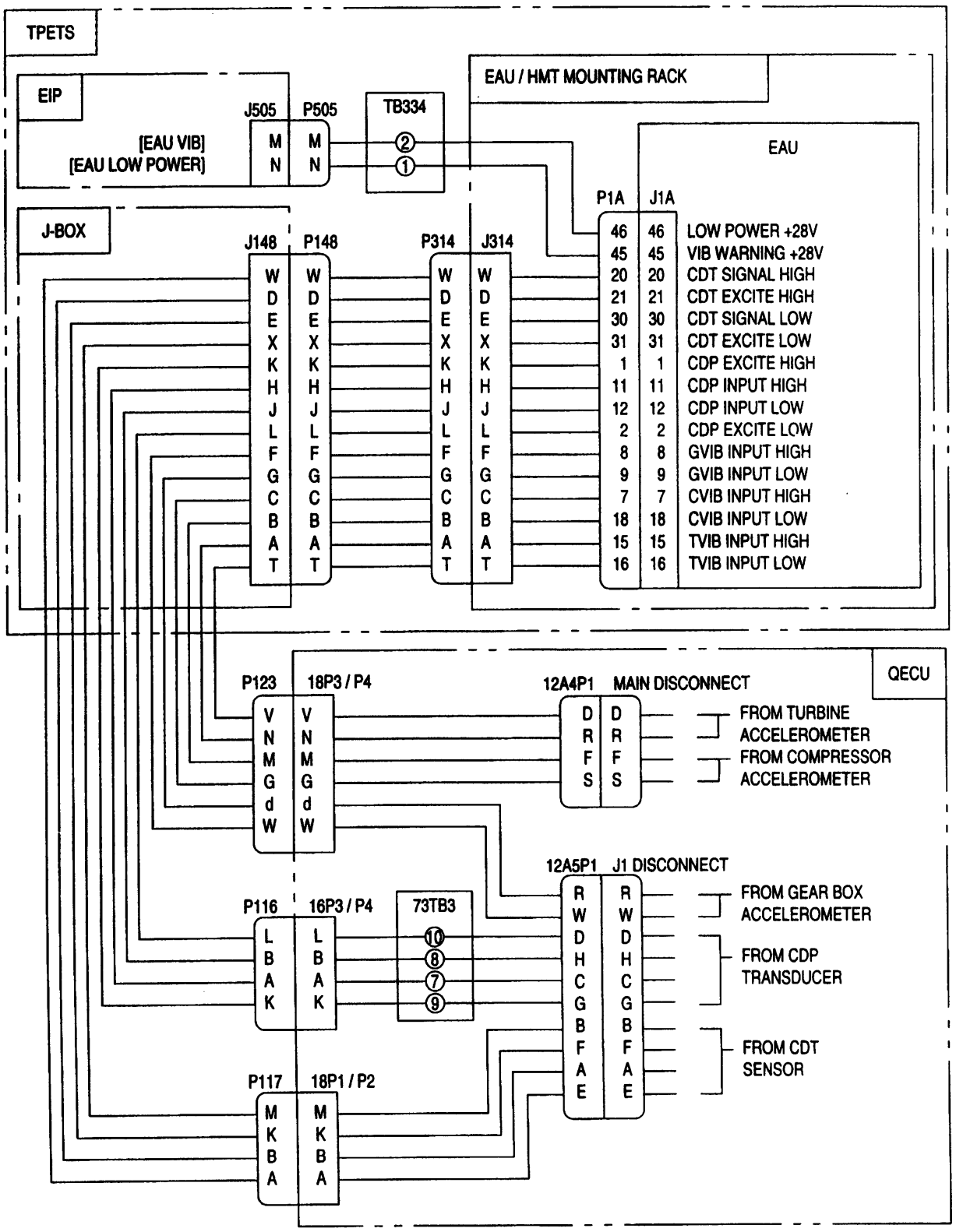

Figure 22. EAU Checkout

71. EAU Removal.

a. Remove power from EAU (1, figure 23).

b. Remove connector P2 (4) from EAU connector J2 and install protective cover (5) on J2.

c. Loosen and disengage two fasteners (3) attaching EAU to EAU/HMT mounting rack (2).

d. Pull EAU from mounting rack.

Battery may explode if recharged or disposed of in fire. The battery contains corrosives and flammable solids which may cause severe burns. Do not attempt to disassemble the battery container.

CAUTION

Use care when handling a lithium battery.

e. Remove battery when storing or shipping the EAU. Refer to EAU Battery Removal, this work package.

72. EAU Installation.

Do not install a lithium battery which has past its expiration date, or if the date is missing.

CAUTION

Use care when handling a lithium battery.

a. Install lithium battery when EAU has been removed from storage or received from shipping. See EAU Battery Installation, this work package.

b. Position EAU (1, figure 23) in EAU/HMT mounting rack (2) opening.

c. Push EAU into mounting rack, engaging rear–mounted connectors.

d. Engage and tighten two fasteners (3) securing EAU to mounting rack.

e. Remove EAU connector J2 protective cover (5).

f. Install connector P2 (4) on EAU connector J2.

73. EAU Battery Removal.

Materials Required

Specification No./Part No.	Nomenclature
1383W15P003	Battery, Lithium

a. If a version 5.1 or earlier EAU (Figure 24) is being used, remove the EAU (paragraphs 71 and 72, this WP). If a version 6.1 or later EAU (Figure 24) is being used, removal is not necessary. Go to step b.

b. Locate battery access cover (2).

c. Loosen captive screws (3) attaching battery access cover to EAU and remove cover.

d. Loosen screws attaching battery connector to battery.

CAUTION

Use care when handling a lithium battery.

e. Remove battery.

74. EAU Battery Installation.

CAUTION

Use care when handling a lithium battery.

a. Position battery in EAU battery compartment.

b. Mate battery to battery connector.

c. Tighten screws securing battery to connector.

d. Position battery access cover (2, figure 24) over battery compartment and tighten captive screws (3) securing access cover to EAU (1).

e. Install EAU (paragraph 72, this WP) if removed per paragraph 73, this WP.

f. Apply power to EAU.

g. Initialize EAU (WP 022 00).

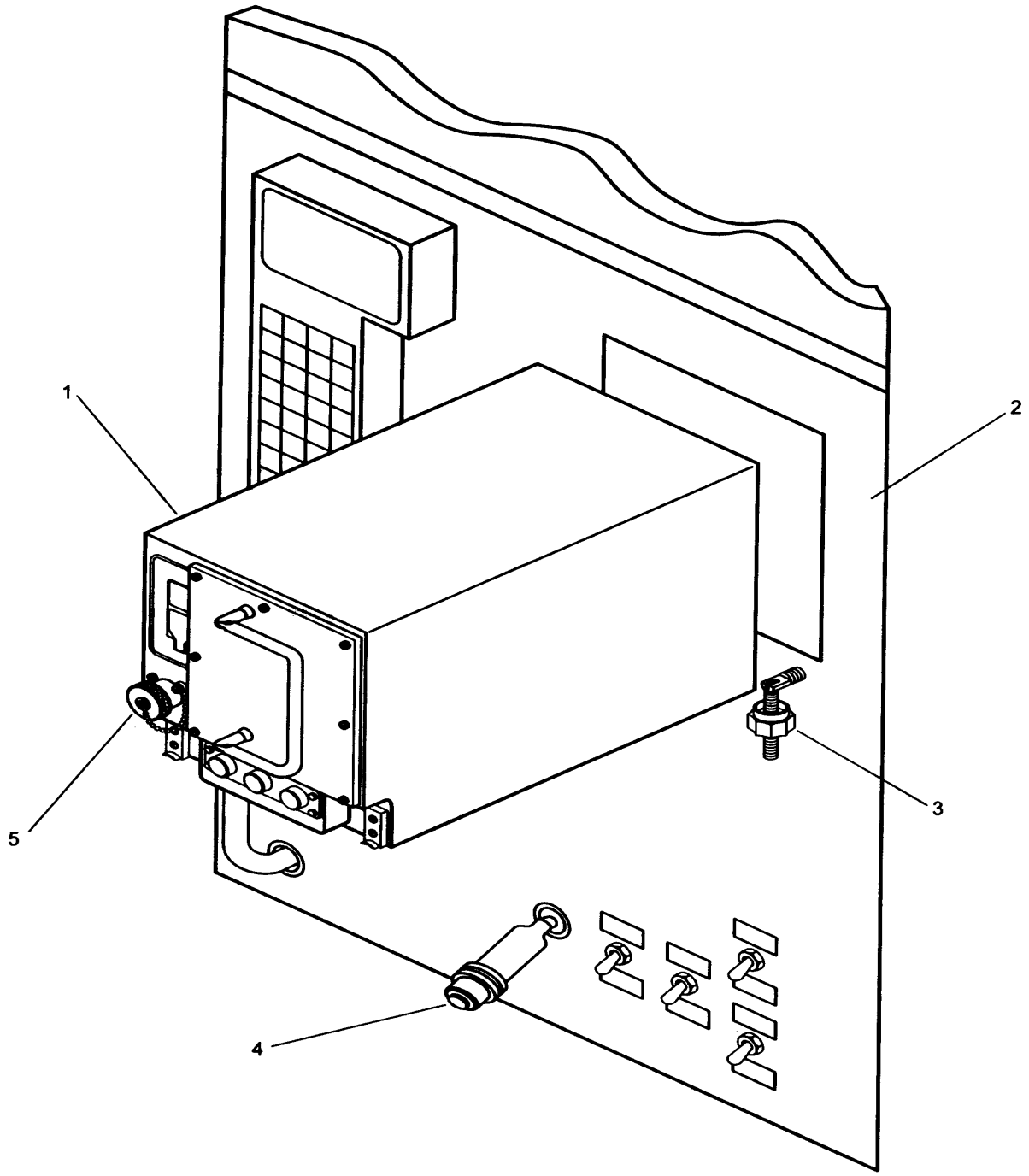

1. EAU
2. EAU/HMT Mounting Rack
3. Fasteners
4. Connector P2
5. Protective Cover, J2

Figure 23. EAU Replacement

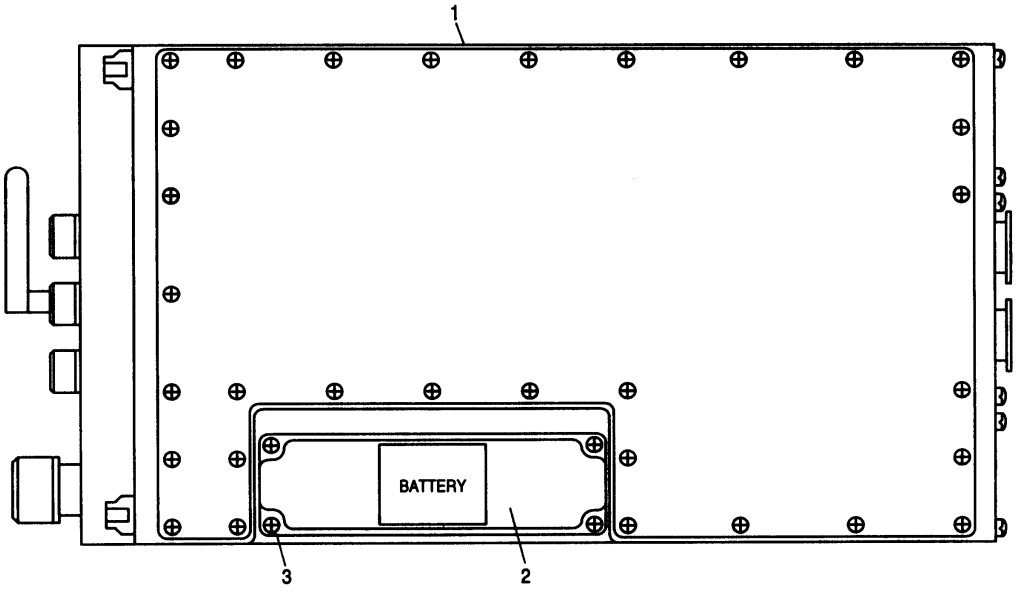

1. EAU
2. Battery Access Cover
3. Captive Screws

Figure 24. EAU Battery Replacement

75. WEIGHT ON WHEELS SWITCH. The WEIGHT ON WHEELS switch, located on the EAU/HMT rack, simulates aircraft take-off and landing. When placed in the OFF (down) position, +28 volts is applied to the EAU discrete WOW input, simulating a grounded aircraft condition. When placed in the AIRBORNE position, +28 volts is removed, simulating a lift-off condition.

76. WARNING LAMPS. Two warning lamps (EAU LOW POWER and EAU VIB) located on the engine instrument panel illuminate when exceedances are detected. The EAU LOW POWER lamp indicates a take-off low power event has occurred. The EAU VIB lamp indicates an excessive vibration event (from rotational components at 18.4 Hz, 230 Hz and 237 Hz) has occurred.

77. PILOT RECORD SWITCH (PRS). The PILOT RECORD switch, located on the EAU/HMT rack, simulates a pilot request for data recording. When placed in the OFF (up) position, EAU logic provides automatic recording of engine event data. When the switch is momentarily placed to the ON position, a snapshot of current data is recorded. Trend data can be recorded when the switch is momentarily placed in the ON position three times within a 10-second period.

78. HANDHELD MAINTENANCE TERMINAL (HMT). Refer to WP 010 00 for HMT description and general operating procedures. Refer to table 14 for display mode commands.

79. HMT Checkout. (figure 25)

		Yes	No
	NOTE When delivered, the HMT may include an extension cable having red and yellow connector markings. This cable is not intended for intermediate–level use. The following steps are performed when support equipment electrical power is applied and the engine is not running.		
a.	Set EAU/HMT mounting rack circuit breaker to the EAU POWER OFF position and go to step b.		
	NOTE The HMT receives operating voltage from circuit breaker is set to the ON position, the HMT self–test will start. Any HMT key pressed during self–test will cause the self–test to fail.		
b.	Set the circuit breaker to the ON position. After the self–test is complete, does HMT display SELF TEST OK?	d	c
c.	Repeat steps a and b. Does HMT display SELF TEST OK?	d	r
d.	Press BK LIGHT ON key. Is HMT display lighted?	e	r
e.	Ensure peculiar engine panel DEC mode select switch is in CONTROL or LIMIT position and go to step f.		
f.	Set EAU/HMT mounting rack EAU/DEC switch to the DEC position and go to step g.		
g.	Using HMT, display CIT and CIP. Are different values displayed?	i	h
h.	Perform steps k and l. Are different values displayed?	q	s
i.	Perform DETC calibration (WP 022 00). Can calibration be performed?	t	j
j.	Perform steps k and m thru p. Can year be entered?	q	s
k.	Set EAU/HMT mounting rack EAU/DEC switch to the EAU position and go to step l.		
l.	Using HMT, display CDT and CDP.	–	–
m.	Press change key. Is WHAT PARAMETER displayed?	n	s
n.	Display YEAR. Are four numbers displayed?	o	s
o.	Press CLEAR key. Is 0 displayed?	p	s
p.	Using key pad, press current year numbers and press ENTER.	–	–
q.	Perform DETC checkout (paragraph 56, this WP) and repeat from step a.	–	–
r.	Replace HMT and repeat from step a.	–	–
s.	Replace HMT and repeat from step k. If checkout continues to fail, replace EAU (paragraphs 71 and 72, this WP) and repeat from step a.	–	–
t.	HMT checkout complete.	–	–

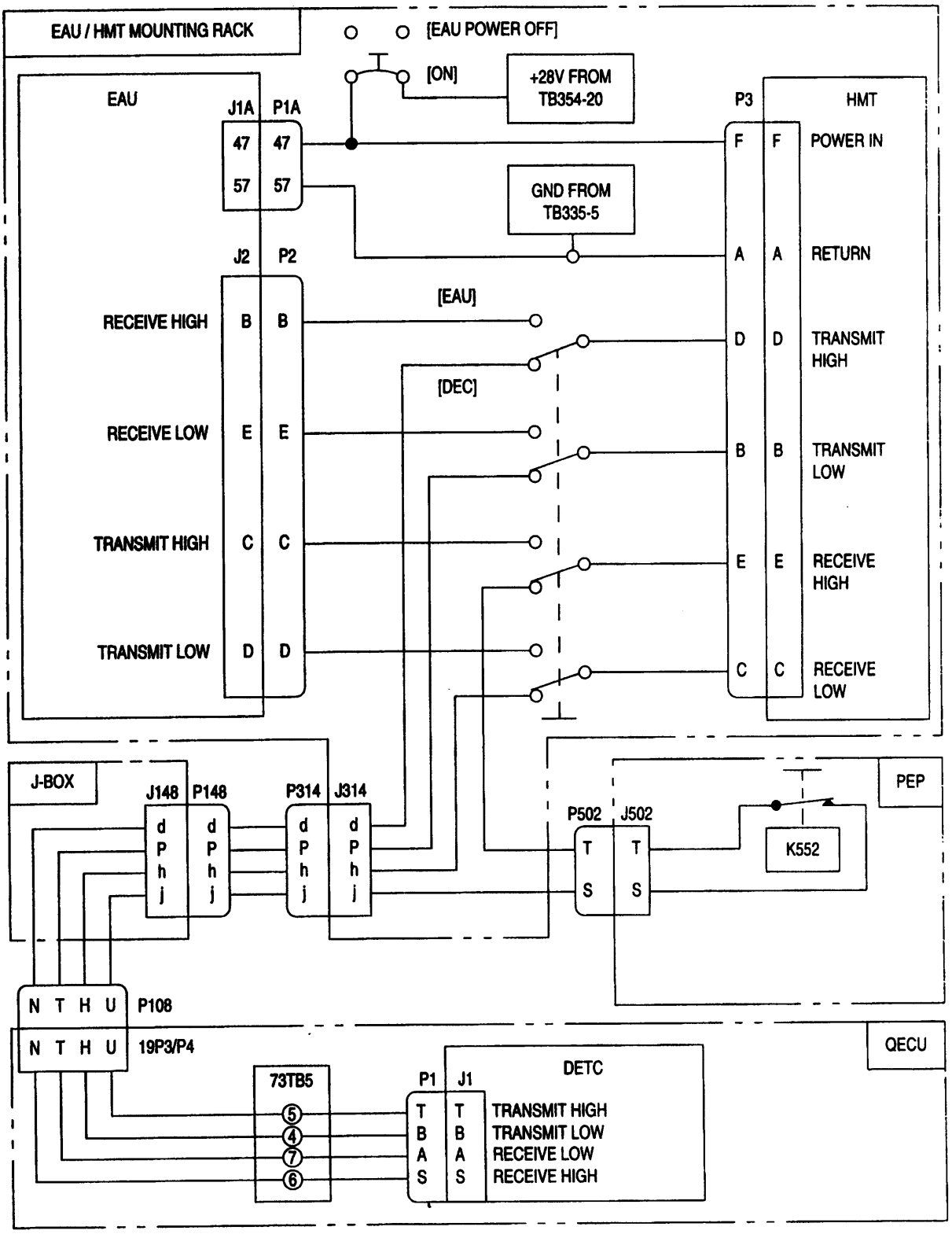

Figure 25. HMT Checkout

80. **EMS CHECKOUT**.

81. EMS REAL–TIME SUBSYSTEM CHECKOUT.

a. Perform engine test preparation (WP 022 00).

b. Using the HMT, erase EAU data media tape.

c. Make photocopy of TTC Logsheet (figure 26).

d. Enter data on TTC Logsheet (blocks 1 thru 10). Use conversion tables (this WP) for outside air temperature and pressure.

NOTE

Important information may not be recorded if step e.(1) and e.(2) are not performed prior to starting engine. Also, step e.(4) thru e.(7) must be performed prior to engine shutdown.

e. Perform engine test (WP 023 00).

(1) Set TPETS EAU/HMT mounting rack PILOT RECORD switch to the ON (down) position.

(2) Set WEIGHT ON WHEELS switch to the OFF position.

(3) Start engine.

(4) When advancing power lever (between 70 and 90°), set WEIGHT ON WHEELS switch to the AIRBORNE position.

(5) While engine is running at 100% rpm, display and enter data on TTC Logsheet (blocks 11 thru 18).

(6) Set WEIGHT ON WHEELS switch to the OFF position.

(7) Set PILOT RECORD switch to the OFF (up) position.

(8) Shutdown engine.

f. Display and enter data in blocks 19 thru 23. Use table 10 to convert the DEC status word to 12–bit format.

g. Check blocks 27 and 28.

h. Remove data media tape from TPETS EAU.

i. Take TTC and TTC Logsheet to EMS ground station. Refer to AE–AGT56–SUM–000 for TTC installation and ground station use.

j. Obtain ground station Bit Summary and Flight Summary reports.

k. Obtain data media tape and TTC Logsheet (signed in block 29).

l. Install data media tape in TPETS EAU.

m. Using the Bit Summary report, enter data in blocks 24 thru 26.

n. Sign TTC Logsheet (block 30).

o. Analyze data (paragraph 82, this WP) or file TTC Logsheet.

This logsheet provides a method of recording and comparing T56-A-427 data. The logsheet is used to record engine control system data and engine monitoring system data displayed by the handheld maintenance terminal (HMT). Data recorded on this logsheet can also be compared with configured data contained in T56-A-427 Ground Station reports.

Engine and Test Identification

1. Engine Serial #	2. DETC Serial #	3. Test #	4. Date / /

Outside Ambient Conditions at Test Time

5. Air Temp F C	6. Air Pressure Hg psia	7. Wind Direction	8. Wind Speed mph	9. Wind Gust mph

Static Parameters

10. CIT C	11. CDT C	12. CTMT C	13. CIP psia	14. CDP psia	15. PD3 psia	16. PS7 psia	17. PLA

Hexadecimal Format to 12-Bit Format Conversion (Table 4)

18. L DEC Status Word 1 HMT Display					19. R DEC Status Word 1 0000H

DETC and EAU Fault Register Data	Bit 11	Bit 10	Bit 9	Bit 8	Bit 7	Bit 6	Bit 5	Bit 4	Bit 3	Bit 2	Bit 1	Bit 0
20. L DEC Status Word 1												
21. EAU Status Word 1											▒	
22. EAU Status Word 2												
23. EAU Status Word 3												
24. EAU Discrete Word 1						▒						
25. EAU Reason Word 1				▒			▒		▒		▒	
26. EAU Reason Word 2			■	■								
27. EAU Reason Word 3					■							

Ground Station Report Request

28. Request Bit Summary Report for Word-Bit Review. ☐	29. Request Flight Summary Report for diagnostic review. ☐

30. Request additional reports (specify).

■ Data not assigned ▒ Data not applicable

Figure 26. TTC Log Sheet

82. DATA ANALYSIS.	Yes	No
NOTE The TTC Logsheet and ground station Flight Summary Report are used to confirm EMS data.		
a. Compare logsheet block 19 with Bit Summary Report Left DEC Word 1. Are Bit Count zeros at same locations?	b	n
b. Review logsheet block 19. Are L DEC Status Word 1, Bits 3 thru 11 zero?	c	p
c. Compare logsheet blocks 20 thru 23 with Bit Summary Report. Are Bit Count zeros at same locations?	d	o
d. Review logsheet block 20. Are EAU Status Word 1, Bits 5, 7, 9, 10, and 11 zero?	e	q
e. Review logsheet block 23. Are EAU Discrete Word 1, Bits 4, 5, and 7 zero?	f	q
f. Review logsheet block 24. Is Reason Word 1, Bit 0 active?	g	r
g. Is Reason Word 1, Bit 2 active?	h	s
h. Is Reason Word 1, Bit 4 active?	i	t
i. Is Reason Word 1, Bit 6 active?	j	u
j. Is Reason Word 1, Bit 9 active?	k	v
k. Is Reason Word 1, Bit 11 active?	l	w
l. Review ground station Flight Summary Report. Are diagnostics listed on the report?	–	ad
m. DELETED	–	–
n. Fault isolate to defective DETC, EAU, or HMT.	–	–
o. Fault isolate to defective EAU or HMT.	–	–
p. Perform DETC checkout procedures (paragraph 56, this WP).	–	–
q. Perform EAU checkout procedures (paragraph 70, this WP).	–	–
r. EAU start mode was not detected. Go to step x.		
s. EAU ground–idle mode was not detected. Go to step x.		
t. EAU take–off mode was not detected. Go to step x.		
u. EAU lift–off mode was not detected. Go to step x.		
v. EAU end–of–flight mode was not detected. Go to step z.		
w. EAU pilot–record request not detected. Go to step aa.		
x. Perform RPM components checkout procedures (paragraph 22, this WP). Is RPM signal correct?	y	ab
y. Perform PLA components checkout procedures (paragraph 26, this WP). Is PLA signal correct?	z	ab
z. Check TPETS weight on wheels switch and associated wiring (NAVAIR 17–15AH–28). Is equipment defective?	ab	ac
aa. Check TPETS pilot record switch and associated wiring (NAVAIR 17–15AH–28). Is equipment defective?	ab	ac
ab. Perform required maintenance and repeat from step a.	–	–
ac. Replace EAU (paragraphs 71 and 72, this WP) and repeat from step a.	–	–
ad. EMS checkout complete.	–	–