REVISIONS			
REV	DESCRIPTION	DATE	APPROVED

NOTES:

1. WEIGHT, 3.6 POUNDS MAXIMUM, LESS CABLE, CLOSURE RING AND SHIPPING PLUG.

2. ARMING WIRE IS RESTRAINED BY SPRING LOADED END OF GAG ROD WHEN SAFING PIN IS REMOVED.

3. ARMING WIRE HOUSING IS FREE TO ROTATE TO PERMIT ALIGNMENT WITH ARMING WIRE.

4. THIS DIMENSION INCLUDES THE THICKNESS OF THE IDENTIFICATION PLATE.

5. MARK LINES INDICATED TO DIMENSIONS SHOWN USING INK IN ACCORDANCE WITH CIDA–A–56032.

6. FUZE HOUSING SHALL BE FORMED TO DIMENSIONS INDICATED AFTER ASSEMBLY.

7. MATERIAL, CORROSION RESISTANT STEEL SPRING WIRE IN ACCORDANCE WITH ASTM A313, TYPE 302 CLASS I, FINISH BRIGHT.

8. LEGS SHALL RETURN TO 215° AFTER 60° MINIMUM RELATIVE DEFLECTION IN DIRECTION SHOWN BY ARROWS.

9. THIS PIN SHALL MEET THE REQUIREMENTS OF MS 35678–1 EXCEPT AS SHOWN.

10. THIS DIAGRAM COMPLIES WITH THE SAFE POSITION AND CONDITION REQUIREMENTS OF PMA201–03–003.

11. MATERIAL: CHROMIUM–NICKEL STAINLESS STEEL SPRING WIRE IN ACCORDANCE WITH ASTM A313, TYPE 302 CLASS 1, OR TYPE 304, FINISH BRIGHT.

12. SURFACE FINISHES AND CONVERSION COATINGS TO BE SUITABLE FOR THE ENVIRONMENTS IDENTIFIED IN PMA201–03–003.

13 THIS ITEM SHALL CONFORM TO THE REQUIREMENTS OF PMA201–03–003.

14. THE LEFT HAND SIDE IS THE REFERENCE SEATING PLANE THAT ALL DIMENSIONS ARE REFERENCED FROM.

15. BACKGROUND SHALL BE BLACK COLOR NUMBER 37038 IN ACCORDANCE WITH FED–STD–595. EXCEPT AS INDICATED IN NOTE 16.

16. BACKGROUND IN AREA INDICATED SHALL BE RED COLOR NUMBER 38905 IN ACCORDANCE WITH FED–STD–595.

17. HEAT TREAT IN ACCORDANCE WITH MIL–H–6875, CLASS A TO 180,000 PSI MINIMUM ULTIMATE TENSILE STRENGTH..

18. MATERIAL: STEEL 4130 COLD ROLLED IN ACCORDANCE WITH MIL–S–18729, PHYSICAL CONDITION (A).

19. SPRING SHALL RESTORE TO .160 MINIMUM HEIGHT IMMEDIATELY AFTER COMPRESSING TO A SOLID HEIGHT WITHIN .025.

20. CONTACT SHALL RESTORE TO .090±.007 WHEN DEFLECTED TO HEIGHT OF .050.

DESIGN CONTROL DRAWING

Distribution Statement D. Distribution authorized to the DOD and DOD Contractors only because export of the data is restricted (determination 29 SEP 92). Other requests shall be referred to Naval Air Warfare Center Weapons Division (332200E), Point Mugu, CA 93042.

WARNING – This document contains technical data whose export is restricted by the Arms Export Control Act (Title 22, U.S.C., Sec 2751 et seq) or the export Administration Act of 1979, as amended (Title 50, U.S.C., APP 2401 et seq). Violations of these export laws are subject to severe criminal penalties. Disseminate in accordance with provisions of DOD Directive 5230.25.

DESTRUCTION NOTICE – When this data is no longer needed, destroy it by any means which will prevent disclosure of contents or reconstruction of the document.

NEXT ASSY	LISTED ON	USED ON
1379AS972		
1379AS970		

APPLICATION

UNLESS OTHERWISE SPECIFIED
DIMENSIONS ARE IN INCHES
TOLERANCES
ANGLE ± 1°
.XX DECIMAL ± .03
.XXX DECIMAL ± .005
PART SHALL BE FREE OF BURRS
BROKEN EDGES .02 MAX
FILLETS — R MAX
SURFACE ROUGHNESS 250√
INTERPRET DRAWING IN ACCORDANCE WITH MIL–STD–100 AND ANSI Y14.5M–1982
DO NOT SCALE THIS DRAWING

NAVAL AIR WARFARE CENTER
WEAPONS DIVISION
POINT MUGU, CALIF. 93042

PE		04/02/23
CM		04/02/23
CHECKED		
CHECKED		040217
DRAWN		040217

APPROVED FOR NAVAIRSYSCOM
ORIGINAL SIGNED BY
BY DIRECTION

DEPARTMENT OF THE NAVY
NAVAL AIR SYSTEMS COMMAND
WASHINGTON, D.C. 20360

FUZE, BOMB, ELECTRONIC–
FMU–139C/B

SIZE	CAGE CODE NO.	NAVAIRSYSCOM DWG NO.	REV
D	30003	1379AS971	–
SCALE 1/1	FILE NO. 1379AS971S1	SHEET 1 OF 6	

REVISIONS			
REV	DESCRIPTION	DATE	APPROVED

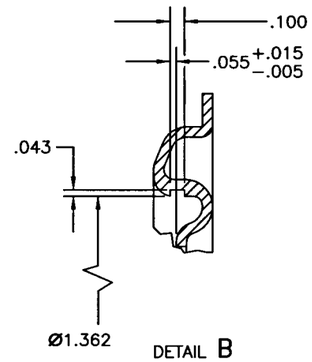

DETAIL B
SCALE 2/1
3X
120° APART
SHIPPING PLUG
REMOVED FOR CLARITY

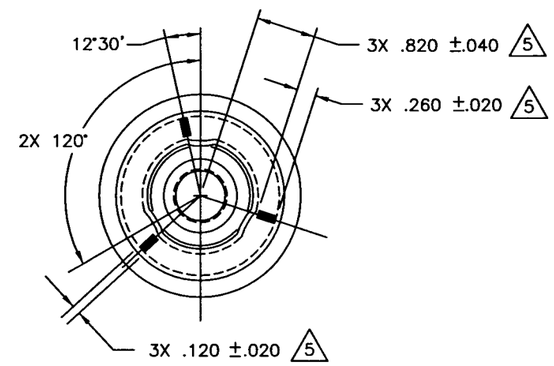

VIEW A–A
SCALE 1/1
SHIPPING PLUG
REMOVED FOR CLARITY

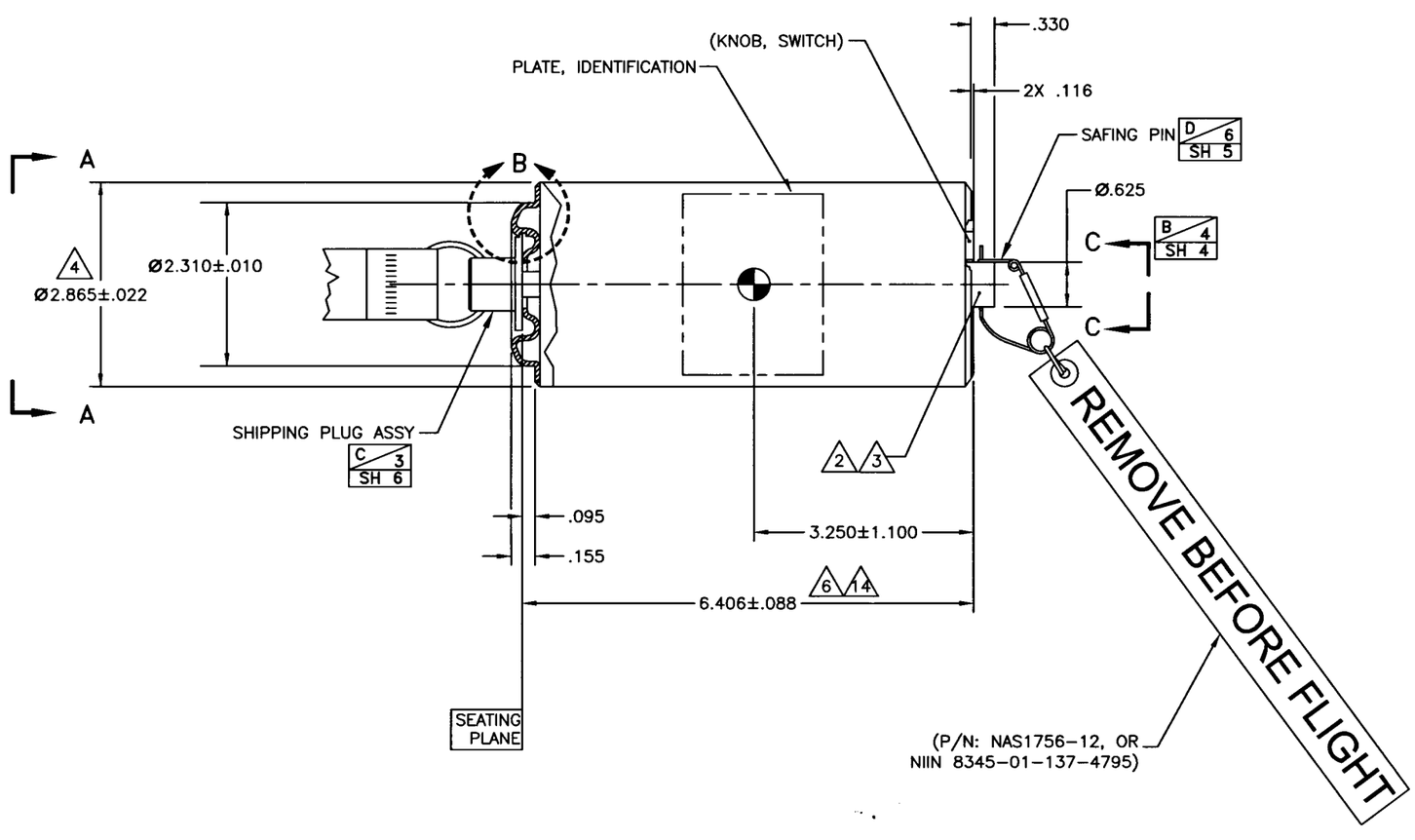

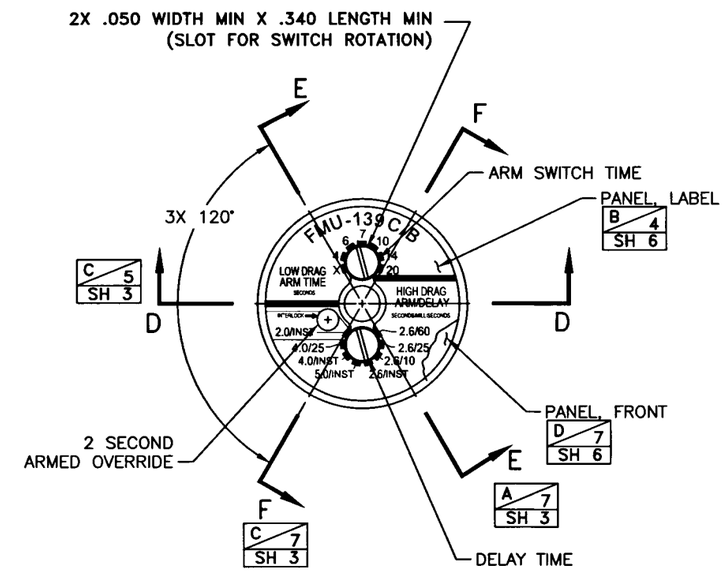

SAFING PIN AND
SAFING PIN TAG
REMOVED FOR CLARITY

SIZE	CAGE CODE NO.	NAVAIRSYSCOM DWG NO.	REV
D	30003	1379AS971	–
SCALE 1/1	ACAD# 1379AS971S2	SHEET 2	

REVISIONS			
REV	DESCRIPTION	DATE	APPROVED

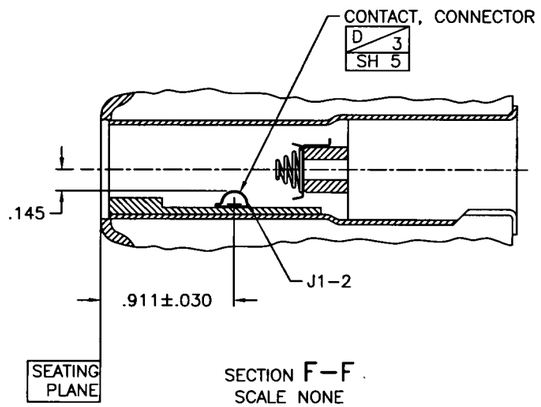

SECTION F–F
SCALE NONE
B 2
SH 2

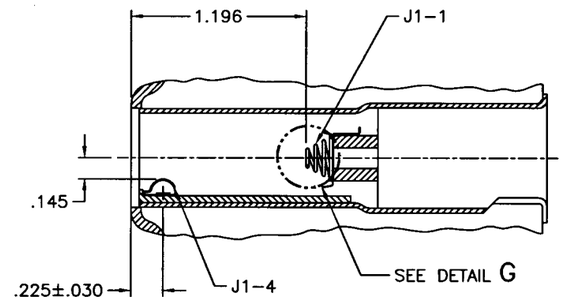

SECTION D–D
SCALE NONE
B 2
SH 2

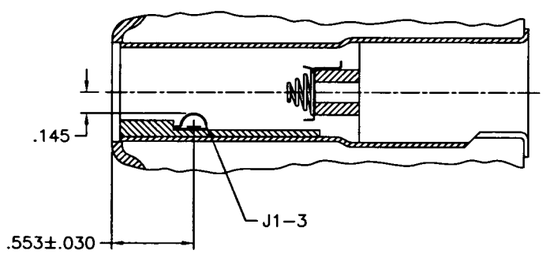

SECTION E–E
SCALE NONE
B 2
SH 2

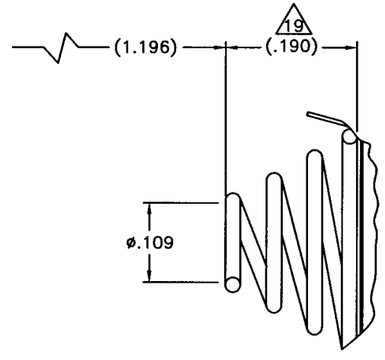

DETAIL G
SCALE: 10/1
(POINT OF CONTINUITY
FOR CONTACT J1–1)

FMU–139C/B ELECTRICAL INTERFACE

CABLE CONNECTOR PIN REQUIREMENT DEFINITION (SEE FMU–139C/B SPECIFICATIONS)		
CONTACT NO.	NAME	INTERFACE INPUT REQUIREMENT
J1–1	FUZE POWER	PULSED POWER
		CONTINUOUS POWER
J1–2	PROXIMITY SENSOR FIRE	
J1–3	RELEASE SIGNAL	
J1–4	BOMB GROUND	POWER RETURN SIGNAL

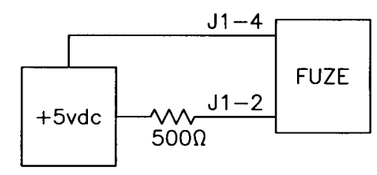

SAFE = .9V
ARM = .7V

10 FUZE STATUS

SIZE	CAGE CODE NO.	NAVAIRSYSCOM DWG NO.	REV
D	30003	1379AS971	–
SCALE 1/1	ACAD# 1379AS971S3	SHEET 3	

REVISIONS			
REV	DESCRIPTION	DATE	APPROVED

ARMING HOUSE
SCALE: 2/1
A 4 / SH 4

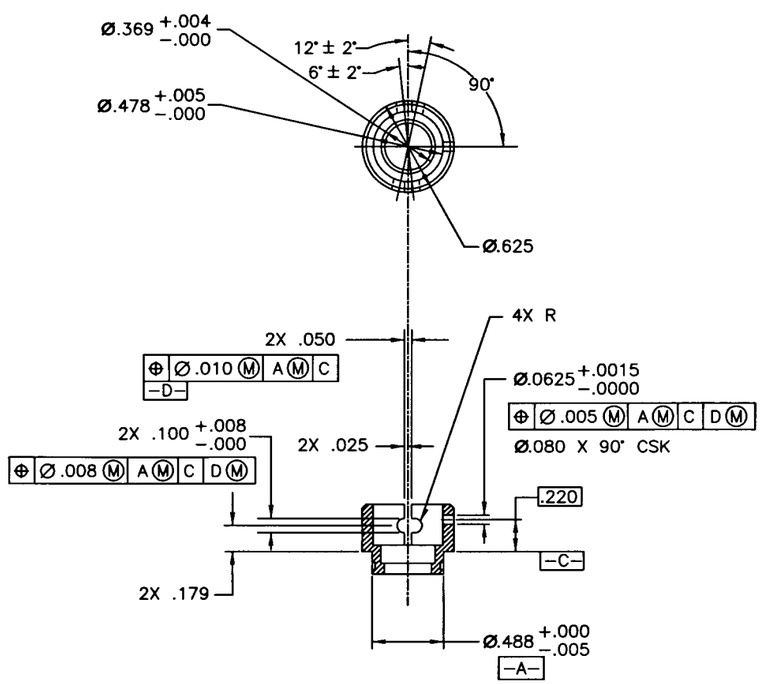

RING, LOCK
SCALE: 2/1
A 4 / SH 4

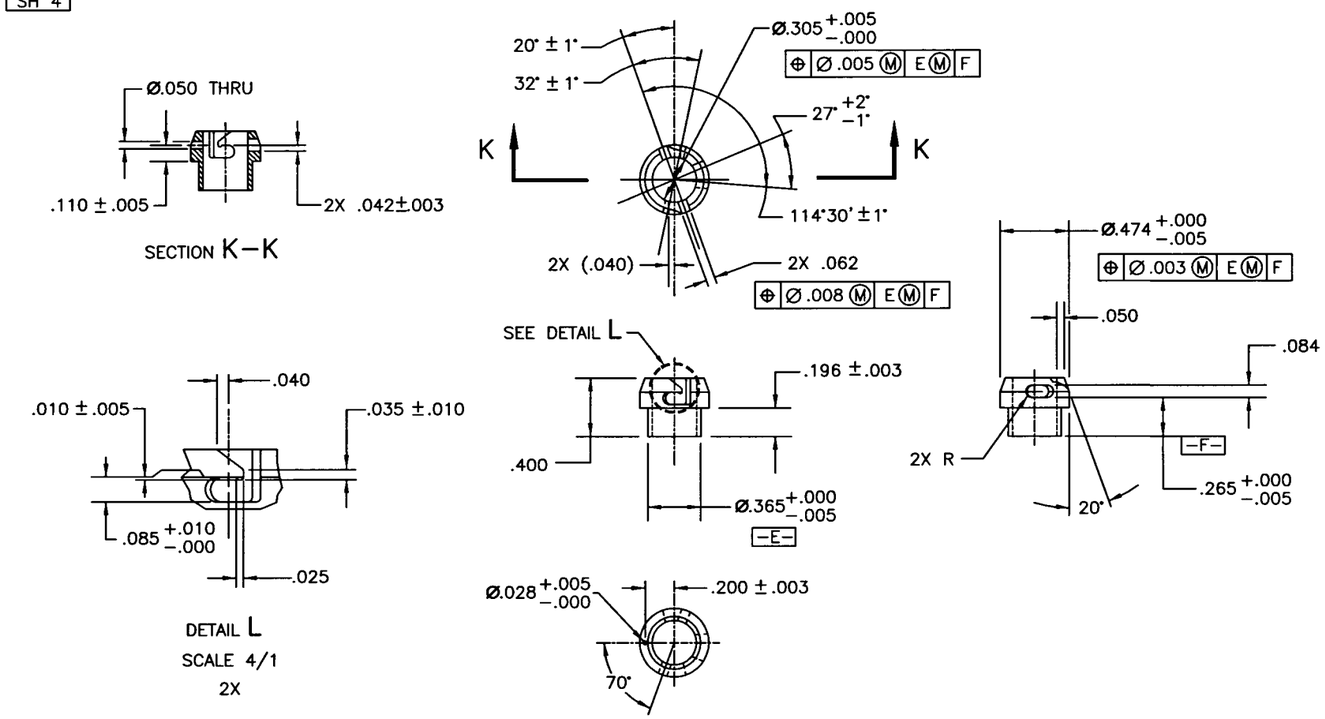

GROOVE PIN
SCALE: 10/1
A 4 / SH 4

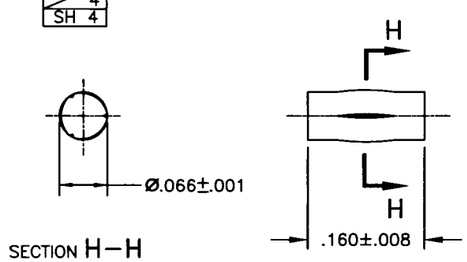

ARMING ASSY
SCALE: 4/1
B 4 / SH 2

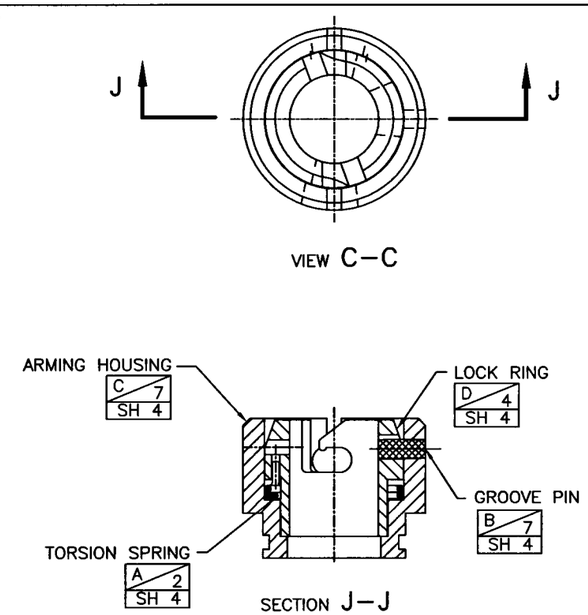

TORSION SPRING
SCALE: 2/1
A 4 / SH 4

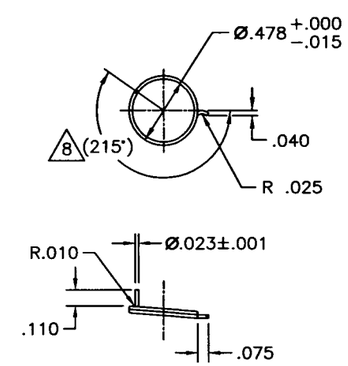

SIZE	CAGE CODE NO.	NAVAIRSYSCOM DWG NO.	REV
D	30003	1379AS971	−
SCALE 1/1	ACAD# 1379AS971S4	SHEET 4	

REVISIONS			
REV	DESCRIPTION	DATE	APPROVED

PIN, SAFING FUZE (11)

SCALE: 2/1

B/5 SH 2

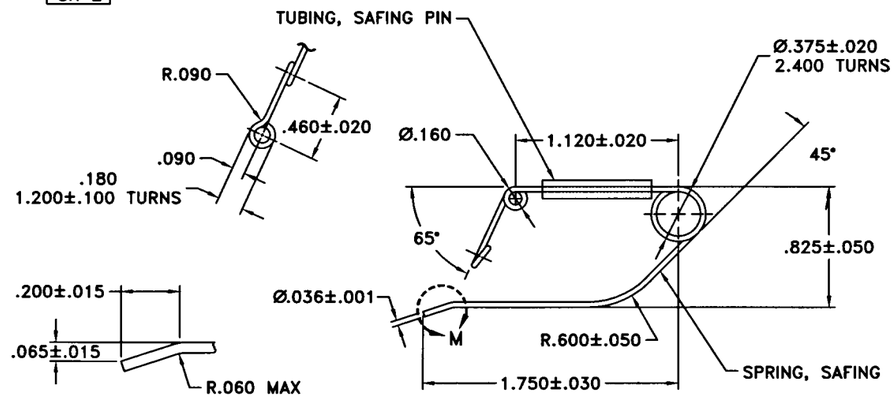

DETAIL M
SCALE: 4/1

CONTACT, CONNECTOR (20)

SCALE: 4/1

C/7 SH 3

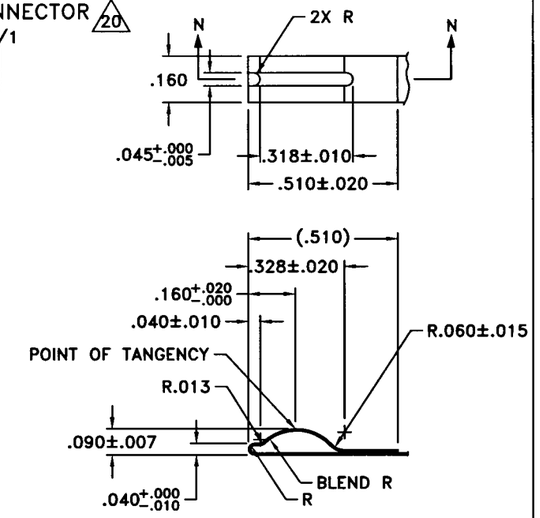

SECTION N–N
SCALE: 4/1

SPRING, SLEEVE (11)

SCALE: 4/1

B/7 SH 5

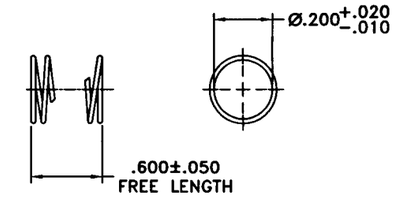

SPRING DATA	
WIRE DIA	.015 REF
DIR OF HELIX	OPTIONAL
ACTIVE COILS	6
SPRING RATE	14 OZ /INCH

GAG ROD ASSEMBLY

SCALE: 4/1

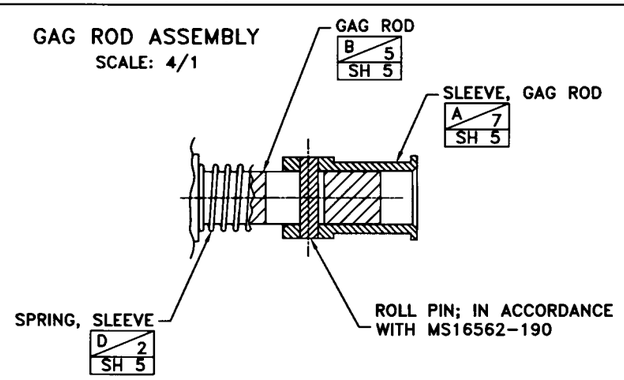

GAG ROD

SCALE: 2/1

B/7 SH 5

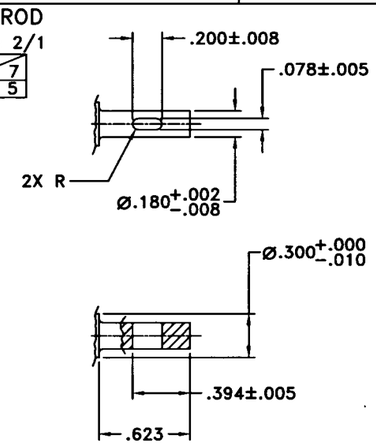

PLUG, SHIPPING

SCALE: 2/1

C/4 SH 6

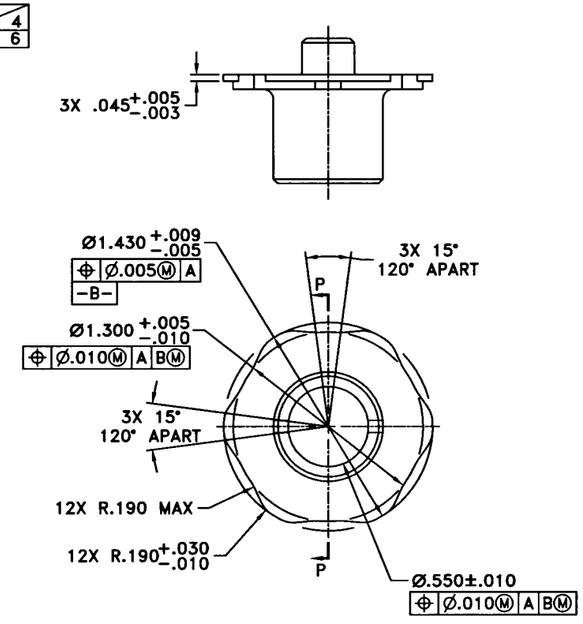

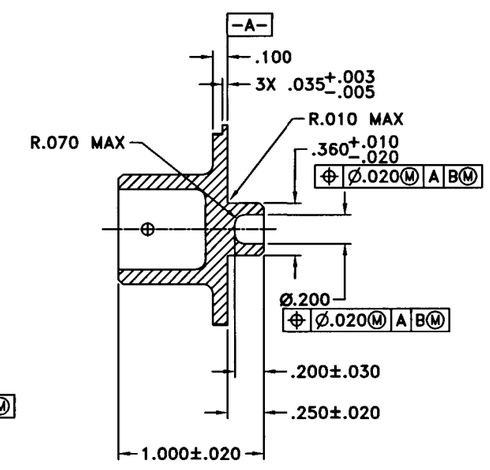

SECTION P–P

SLEEVE, GAG ROD

SCALE: 2/1

B/7 SH 5

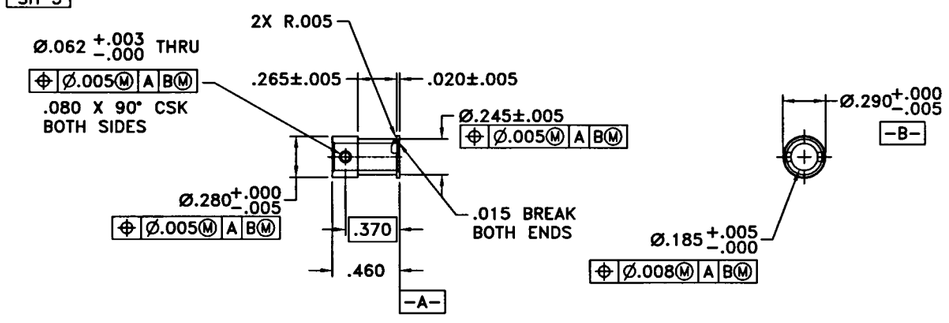

SIZE	CAGE CODE NO.	NAVAIRSYSCOM DWG NO.	REV
D	30003	1379AS971	–
SCALE 1/1	ACAD# 1379AS71S5	SHEET 5	

REVISIONS			
REV	DESCRIPTION	DATE	APPROVED

PANEL, FRONT 17 18
SCALE: 2/1
B 2 / SH 2

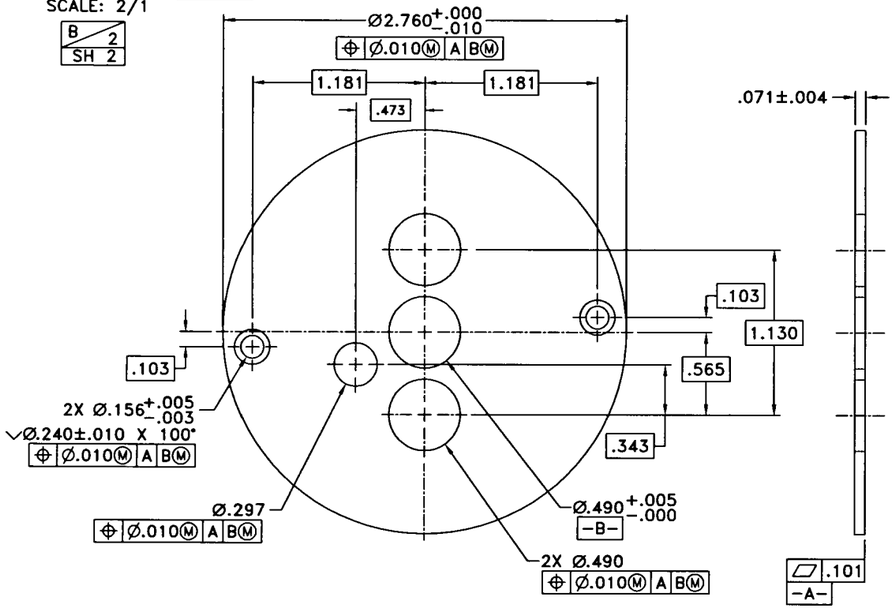

SHIPPING PLUG ASSEMBLY
SCALE: 1/1
B 7 / SH 2

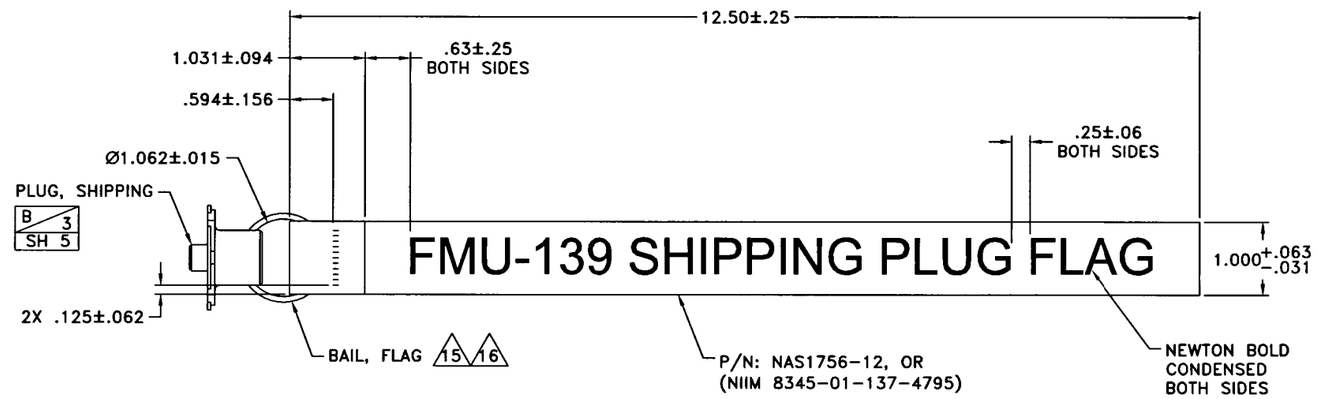

LABEL, PANEL 15
SCALE: 2/1
B 2 / SH 2

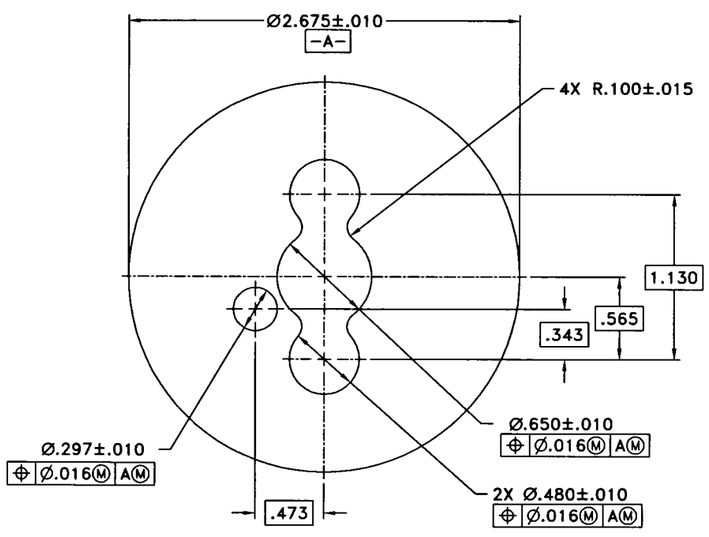

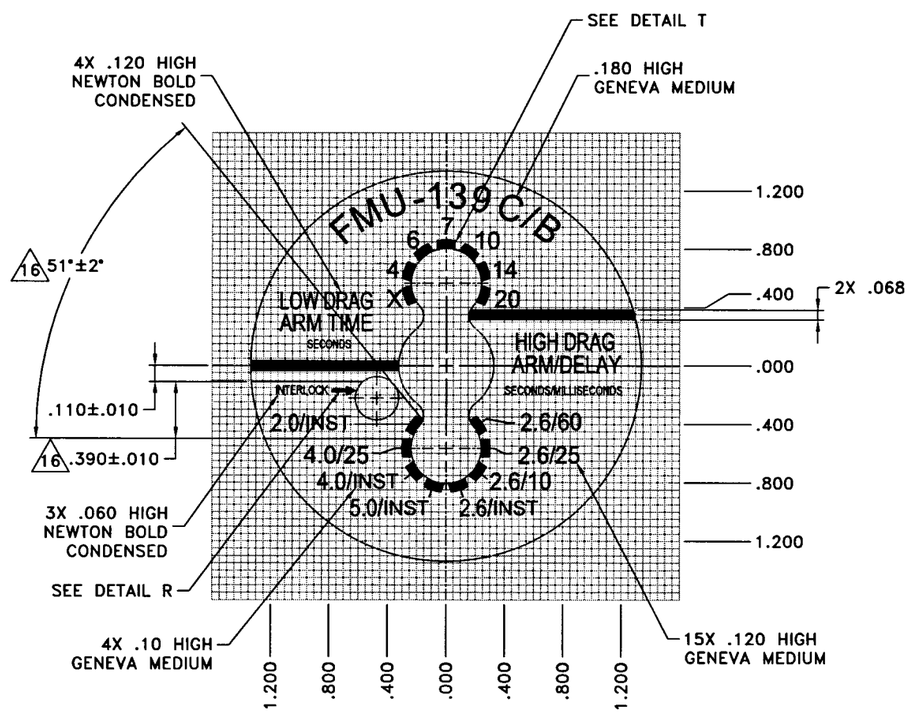

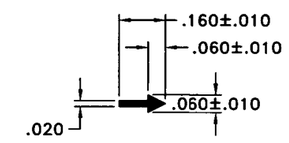

DETAIL R
SCALE: 4/1

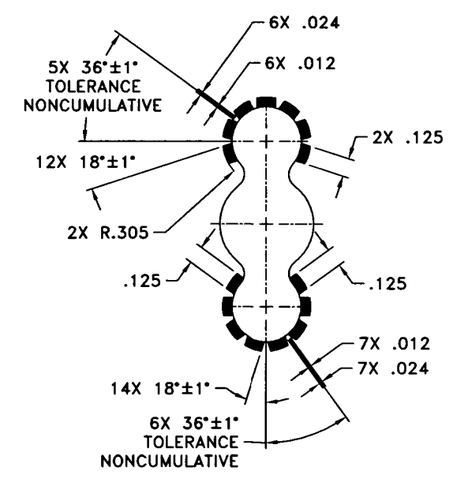

DETAIL T

SIZE	CAGE CODE NO.	NAVAIRSYSCOM DWG NO.	REV
D	30003	1379AS971	–
SCALE 1/1	ACAD# 1379AS971S6	SHEET 6	