NOTE:

2.1 USE CAMERA MOUNT AS TEMPLATE TO LOCATE THE OTHER TWO HOLES.

D2

REVISION HISTORY			
REV	DESCRIPTION	DATE	APPROVAL
D	REVISED AND PARTIALLY REDRAWN BY P. VICENCIO. (1) ITEM ADDED. (2) NOTE ADDED.	03-05-14	R VOTAW
E	REVISED AND PARTIALLY REDRAWN BY T H NGUYEN. SECTIONS H-H AND D-D DELETED. (2) ITEM DELETED. (3) QUANTITY CHANGED. (4) DIMENSION CHANGED.	03-06-13	R VOTAW

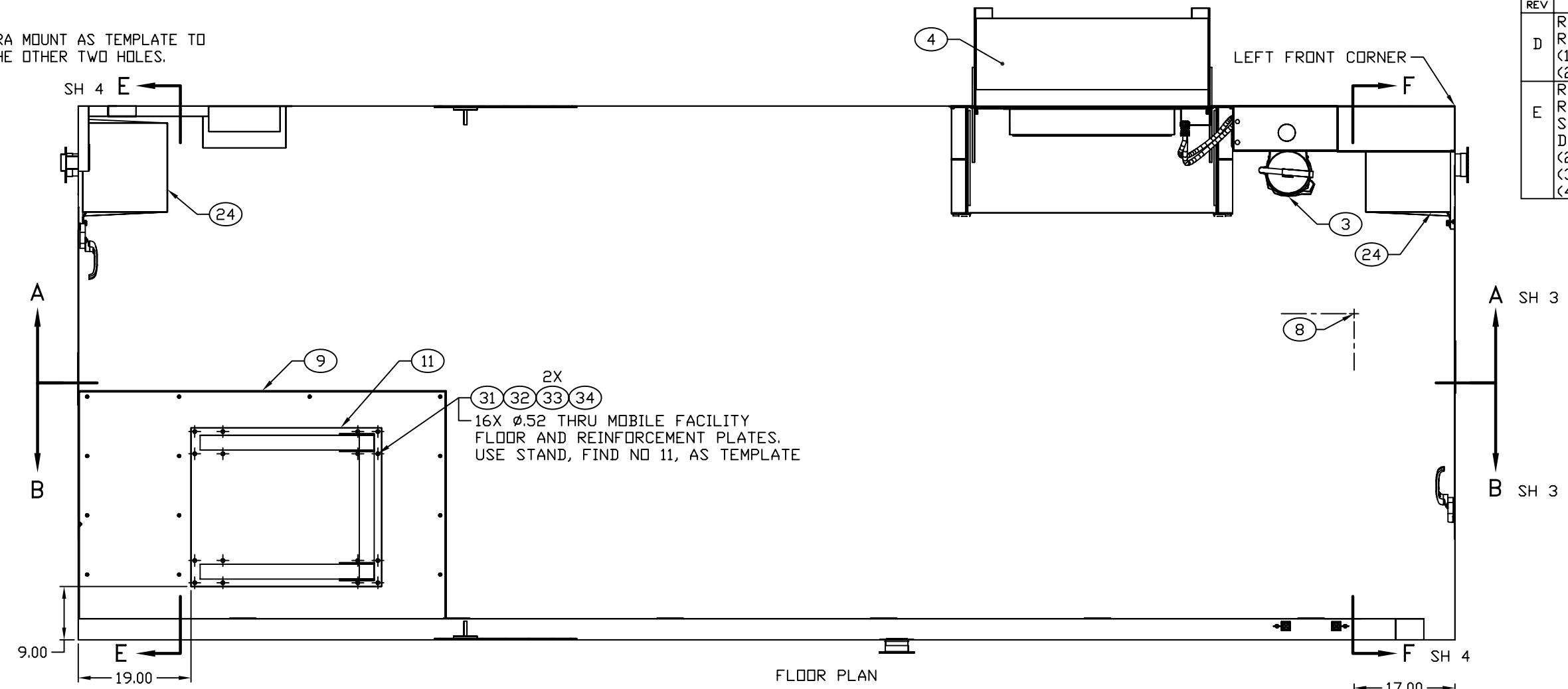

FLOOR PLAN

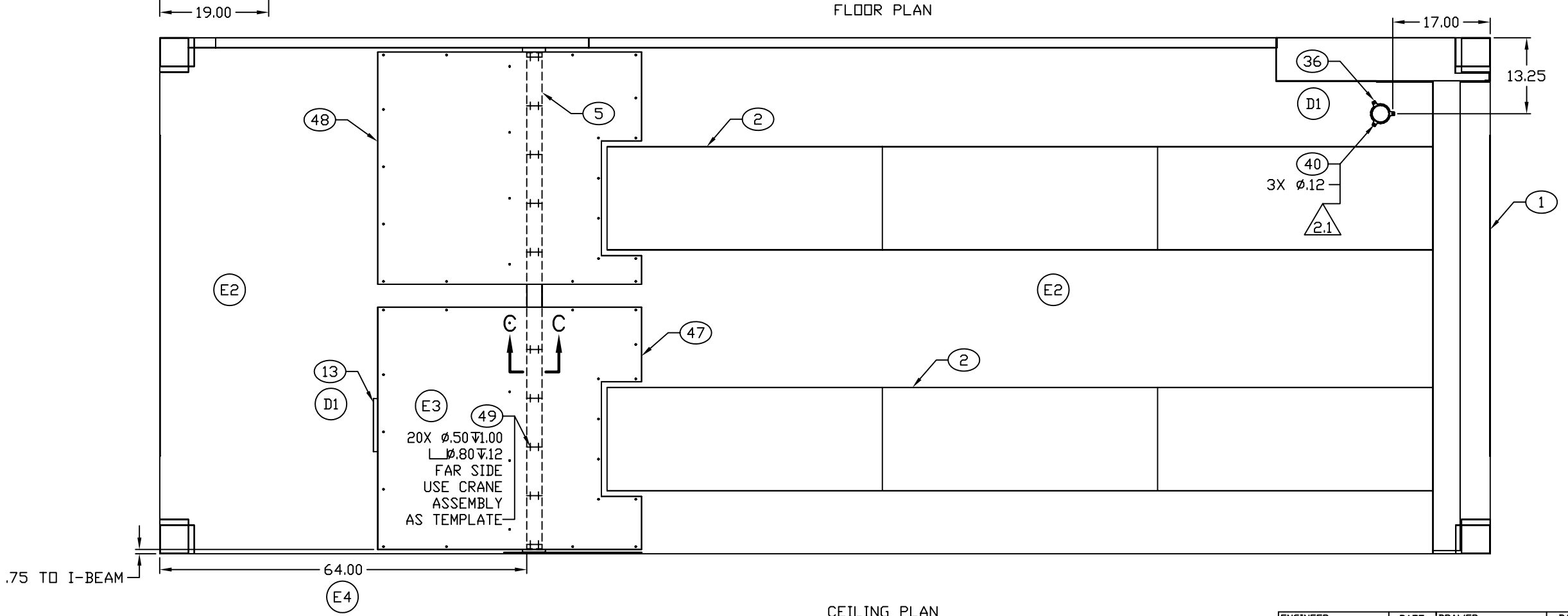

CEILING PLAN
HOIST AND TROLLEY NOT SHOWN

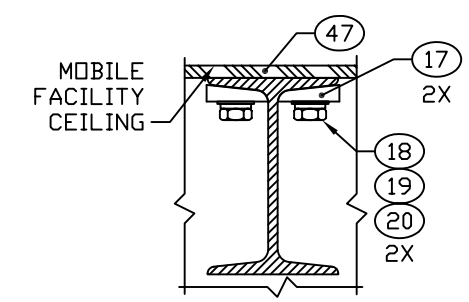

10X SECTION C–C
SCALE 1/2

E3

ENGINEER	DATE	DRAWER	DATE	SIZE	CAGE CODE	DRAWING NUMBER	REV
T NGUYEN	02-07-03	TN	02-07-03	D	91145	MFSP010101	E
NEXT ASSEMBLY FINAL		CHECKER MAB	02-07-03	SCALE 1/11		SHEET 2	

REVISION HISTORY			
REV	DESCRIPTION	DATE	APPROVAL
D	REVISED AND PARTIALLY REDRAWN BY P. VICENCIO. (1) ITEM ADDED. (2) NOTE ADDED.	03-05-14	R VOTAW
E	REVISED AND PARTIALLY REDRAWN BY T H NGUYEN. (1) ITEM ADDED.	03-06-13	R VOTAW

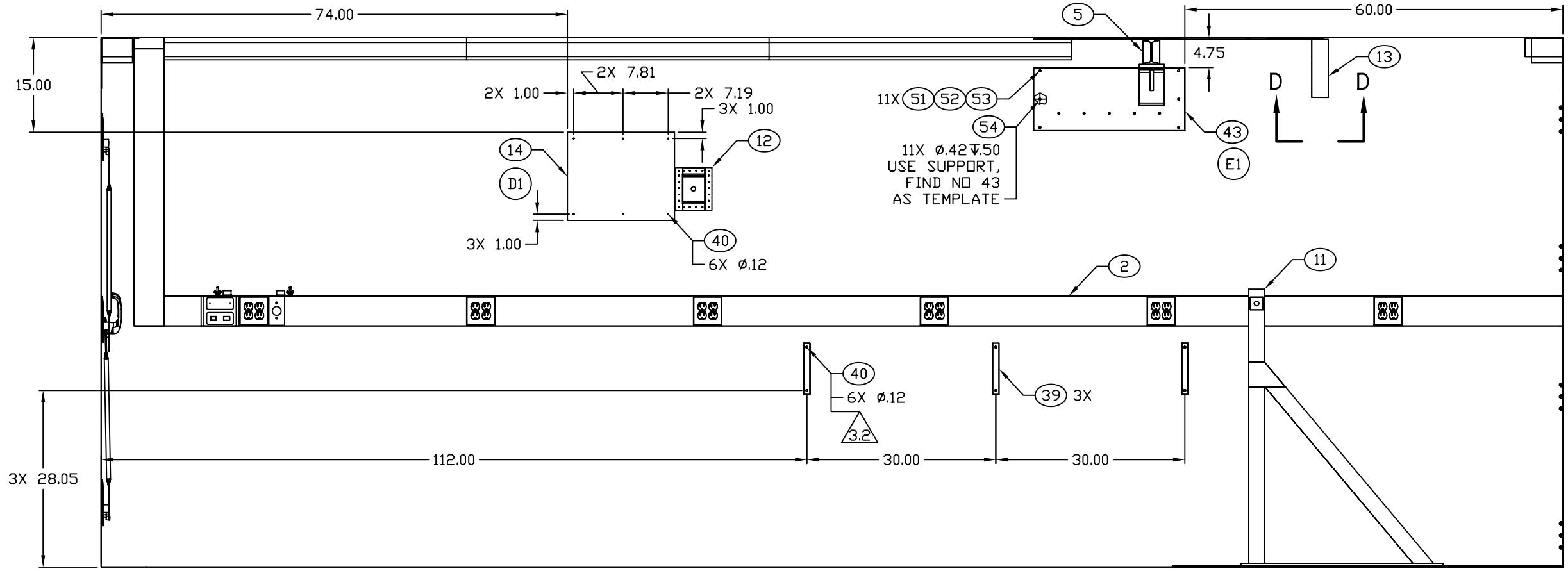

D2

NOTES:

3.1 USE GROUND REEL AS TEMPLATE TO LOCATE HOLES.

3.2 USE CABLE HANGER AS TEMPLATE TO LOCATE HOLES.

SECTION B–B SH 2
ROTATED 180°

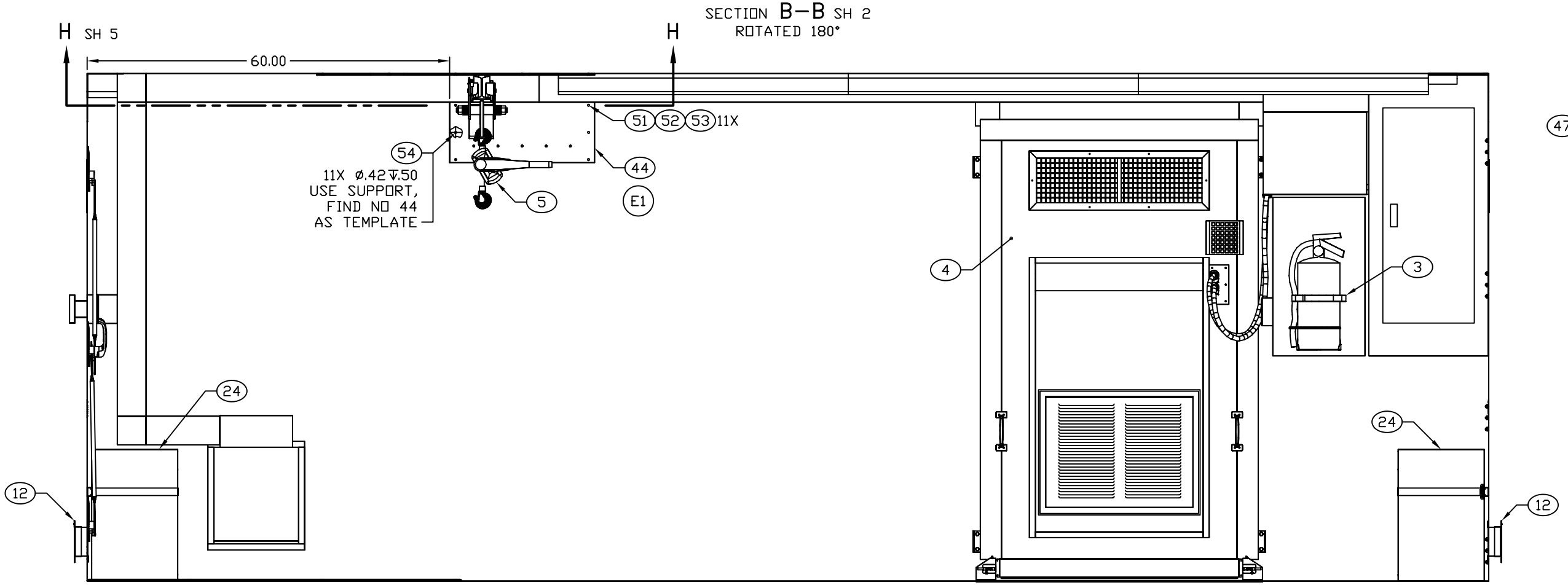

SECTION A–A SH 2

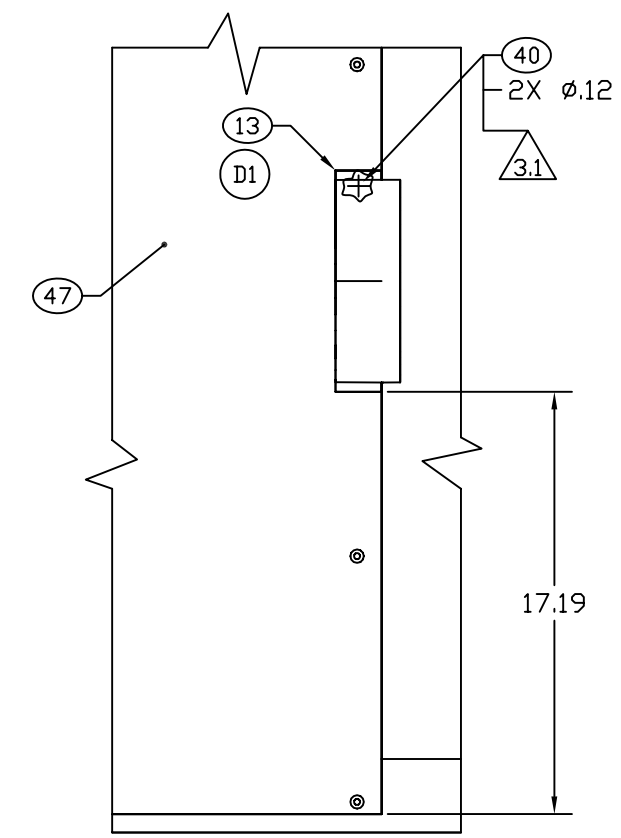

VIEW D–D
SCALE: 1/4

ENGINEER	DATE	DRAWER	DATE	SIZE	CAGE CODE	DRAWING NUMBER	REV
T NGUYEN	02-07-03	TN	02-07-03	D	91145	MF SP010101	E
NEXT ASSEMBLY		CHECKER		SCALE		SHEET	
FINAL		MAB	02-07-03	1/10		3	