REVISION HISTORY			
REV	DESCRIPTION	DATE	APPROVAL
A	REVISED AND PARTIALLY REDRAWN BY P. VICENCIO. POWER SOURCE OF CONFIGURATION NS06 RELOCATED FROM CONFIGURATION JU35 TO MINI SUBSTATION.	06-08-25	R. A. VOTAW

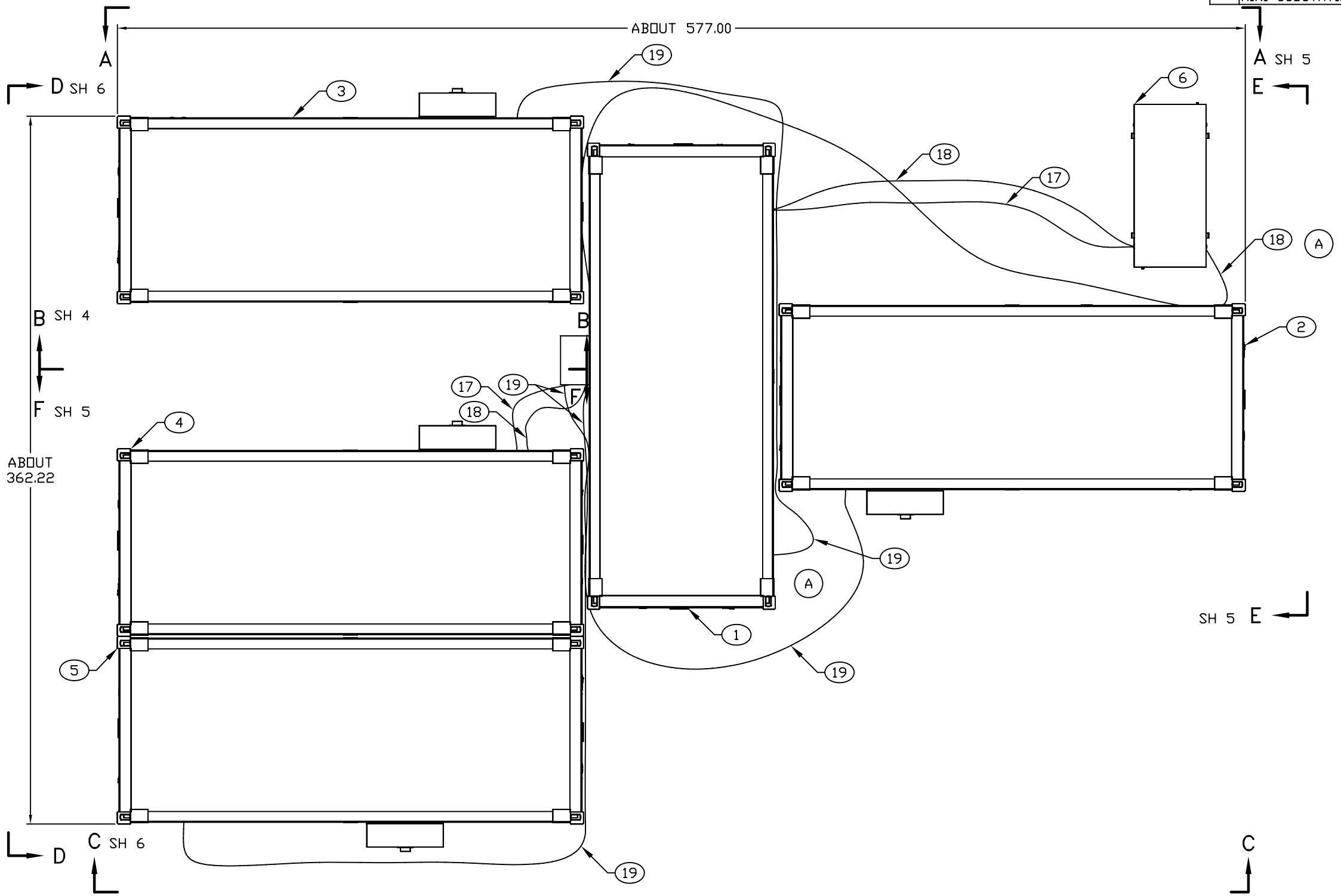

ELECTRICAL PLAN

ENGINEER	DATE	DRAWER	DATE	SIZE	CAGE CODE	DRAWING NUMBER	REV
M A BEUSTER	2005-12-07	MAB	2005-12-07	D	91145	MFNS080101	A
NEXT ASSEMBLY		CHECKER		SCALE		SHEET	
FINAL		PRV	2005-12-12	1/30		2	

REVISION HISTORY			
REV	DESCRIPTION	DATE	APPROVAL
A	REVISED AND PARTIALLY REDRAWN BY P. VICENCIO. POWER SOURCE OF CONFIGURATION NS06 RELOCATED FROM CONFIGURATION JU35 TO MINI SUBSTATION.	06-08-25	R. A. VOTAW

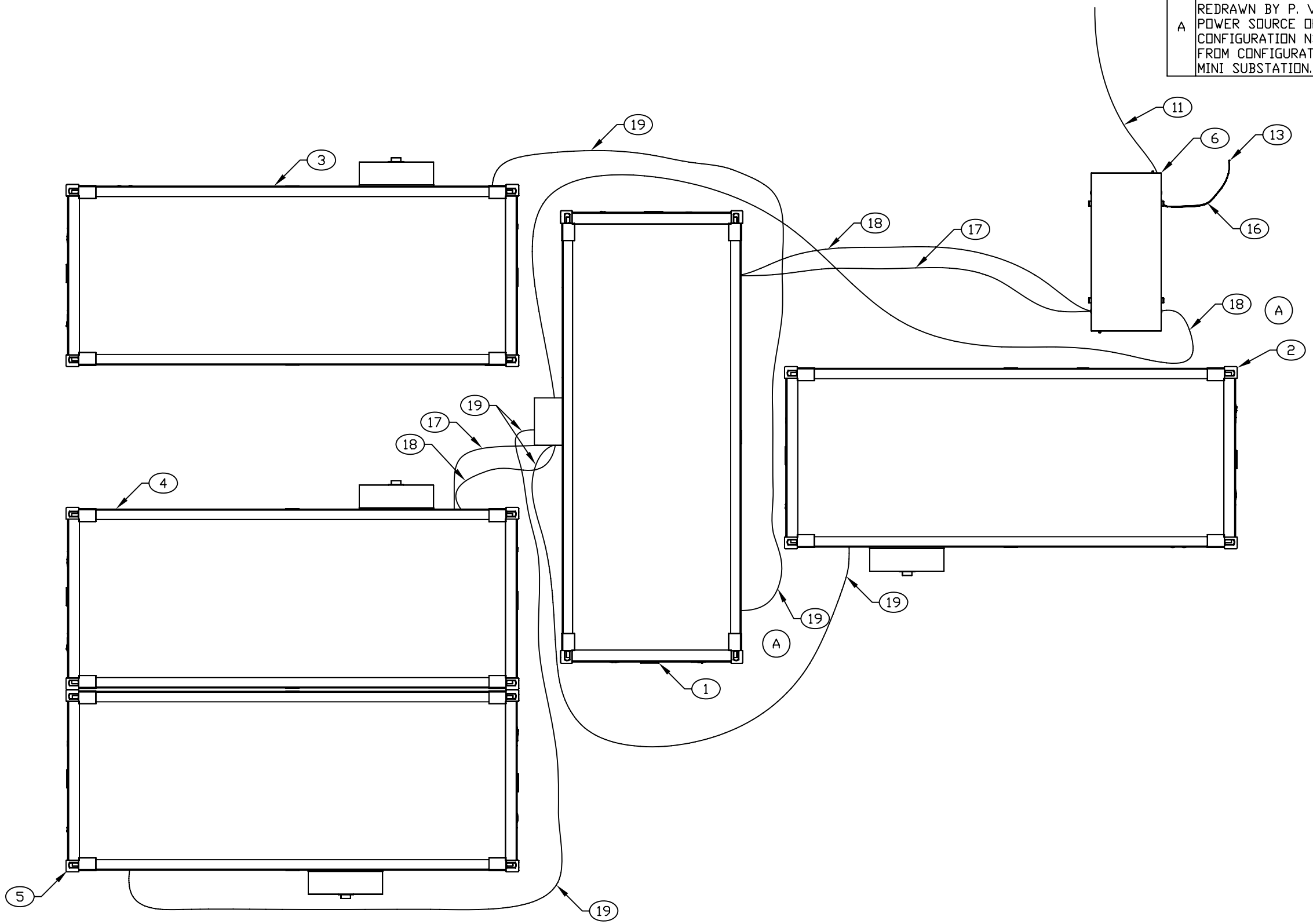

ELECTRICAL PLAN
EXPLODED VIEW
440 VAC, 3-PH, 60 HZ
POWER INPUT TO MINI SUBSTATION

ENGINEER	DATE	DRAWER	DATE	SIZE	CAGE CODE	DRAWING NUMBER	REV
M A BEUSTER	2005-12-07	MAB	2005-12-07	D	91145	MFNS080101	A
NEXT ASSEMBLY		CHECKER		SCALE	1/30	SHEET	3
FINAL		PRV	2005-12-12				

REVISION HISTORY			
REV	DESCRIPTION	DATE	APPROVAL
A	REVISED AND PARTIALLY REDRAWN BY P. VICENCIO. POWER SOURCE OF CONFIGURATION NS06 RELOCATED FROM CONFIGURATION JU35 TO MINI SUBSTATION. (1) QUANTITY OF FIND NO 12 CHANGED FROM 3 TO 2.	06-08-25	R. A. VOTAW

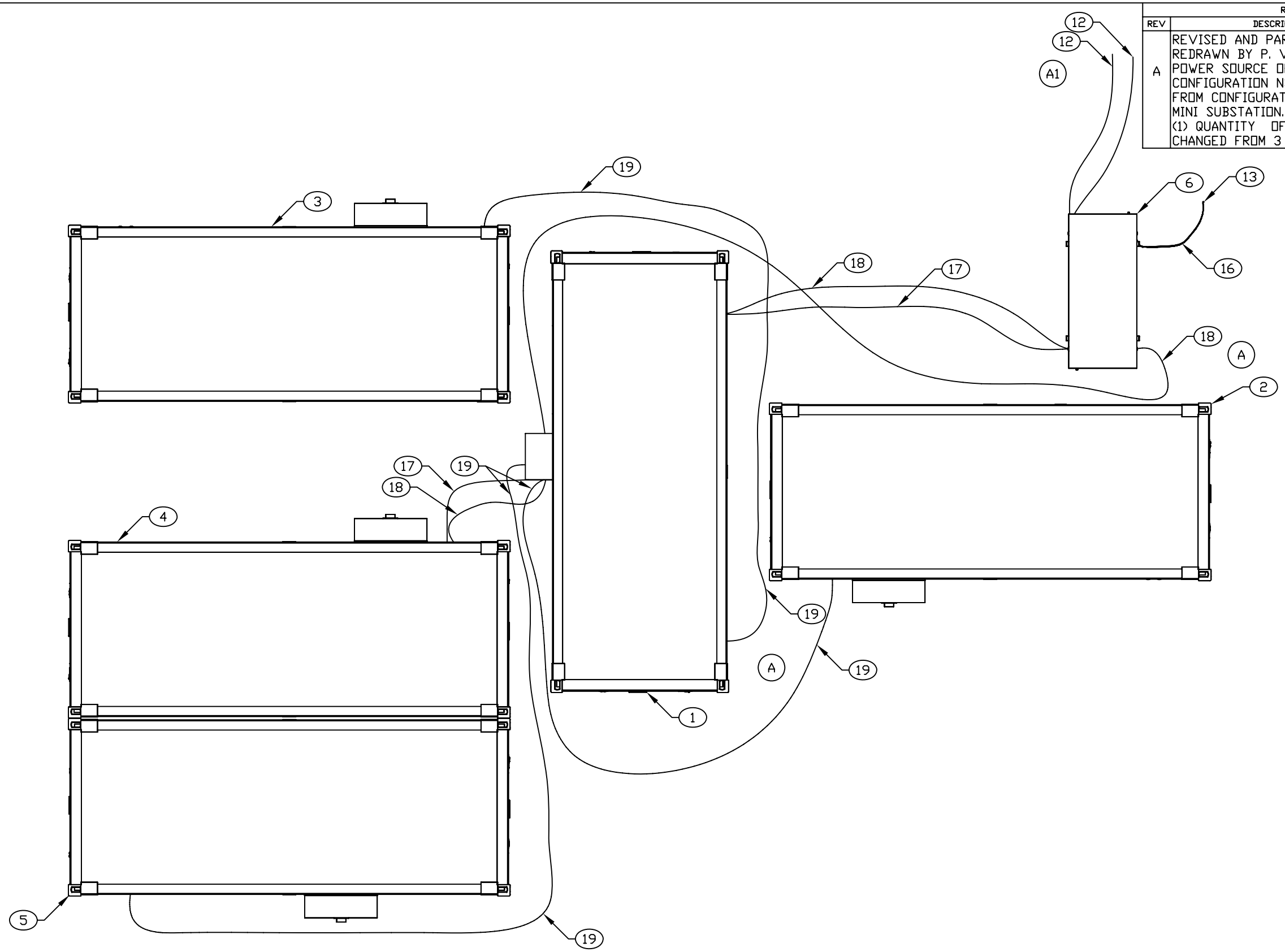

ELECTRICAL PLAN
EXPLODED VIEW
230 VAC, 3-PH, 60 HZ
POWER INPUT TO MINI SUBSTATION

ENGINEER	DATE	DRAWER	DATE	SIZE	CAGE CODE	DRAWING NUMBER	REV
M A BEUSTER	2005-12-07	MAB	2005-12-07	D	91145	MFNS080101	A
NEXT ASSEMBLY		CHECKER		SCALE		SHEET	
FINAL		PRV	2005-12-12	1/30		4	

REVISION HISTORY			
REV	DESCRIPTION	DATE	APPROVAL
A	REVISED AND PARTIALLY REDRAWN BY P. VICENCIO. POWER SOURCE OF CONFIGURATION NS06 RELOCATED FROM CONFIGURATION JU35 TO MINI SUBSTATION.	06-08-25	R. A. VOTAW

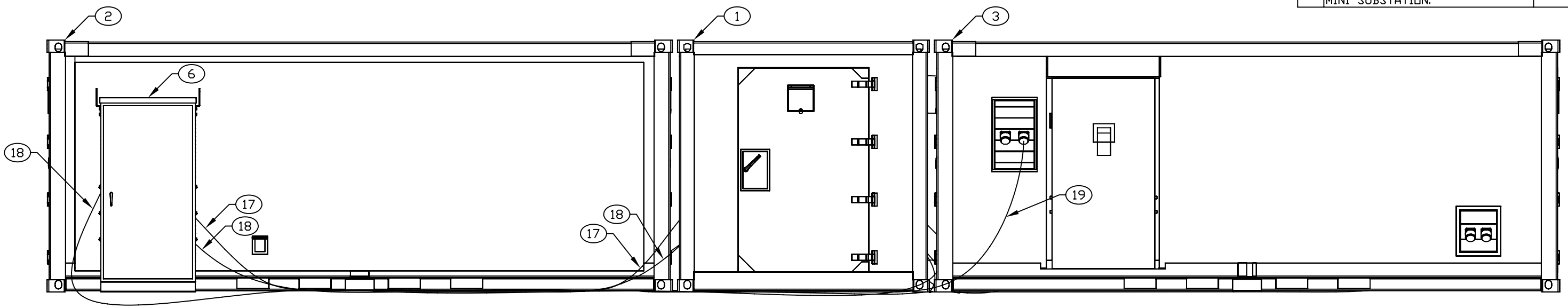

VIEW A–A SH 2
ROTATED 180°

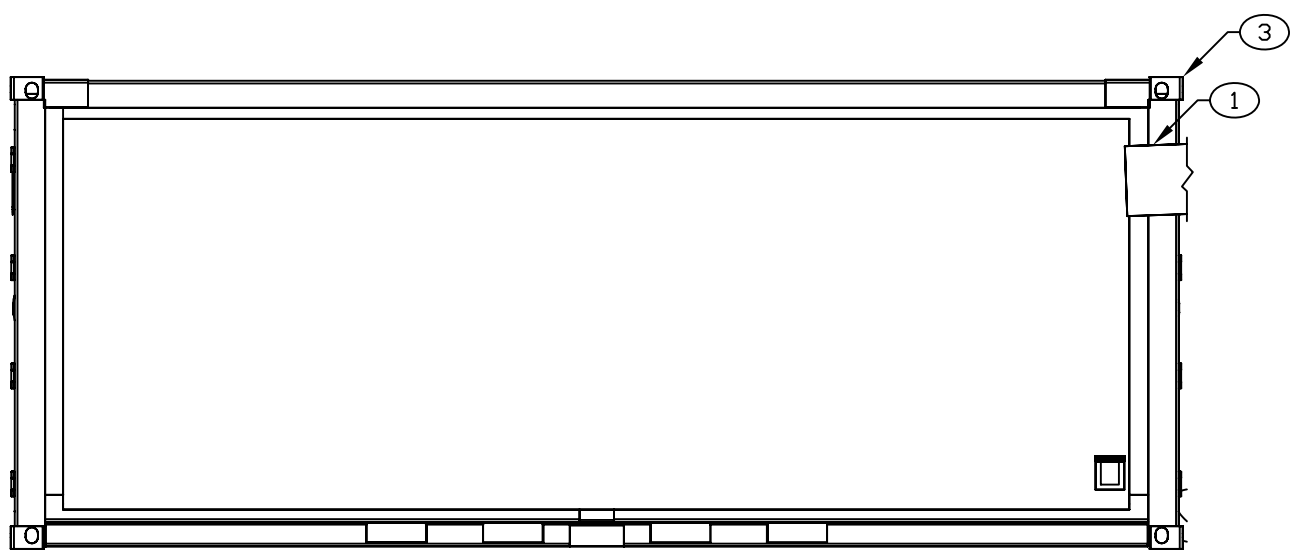

SECTION B–B SH 2

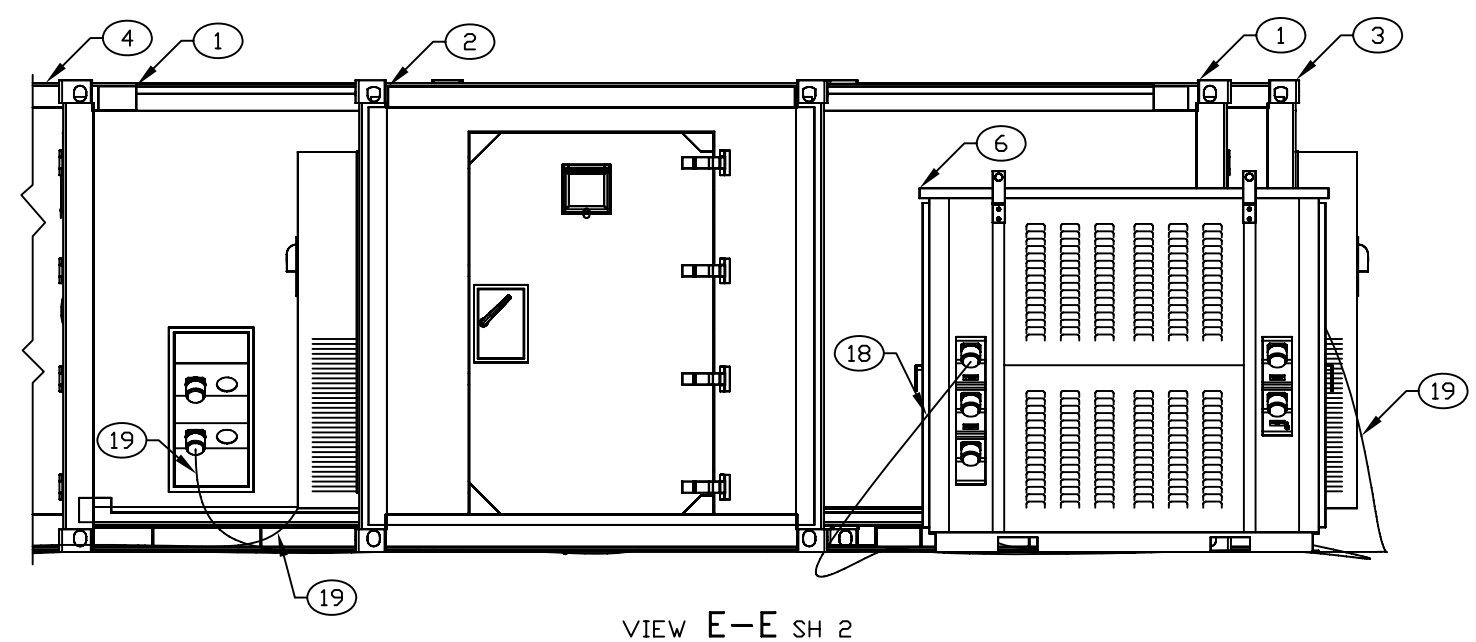

VIEW E–E SH 2
ROTATED 90° CW

ENGINEER	DATE	DRAWER	DATE	SIZE	CAGE CODE	DRAWING NUMBER	REV
M A BEUSTER	2005-12-07	MAB	2005-12-07	D	91145	MFNS080101	A
NEXT ASSEMBLY		CHECKER		SCALE		SHEET	
FINAL		PRV	2005-12-12	1/20		5	

REVISION HISTORY			
REV	DESCRIPTION	DATE	APPROVAL
A	REVISED AND PARTIALLY REDRAWN BY P. VICENCIO. POWER SOURCE OF CONFIGURATION NS06 RELOCATED FROM CONFIGURATION JU35 TO MINI SUBSTATION.	06-08-25	R. A. VOTAW

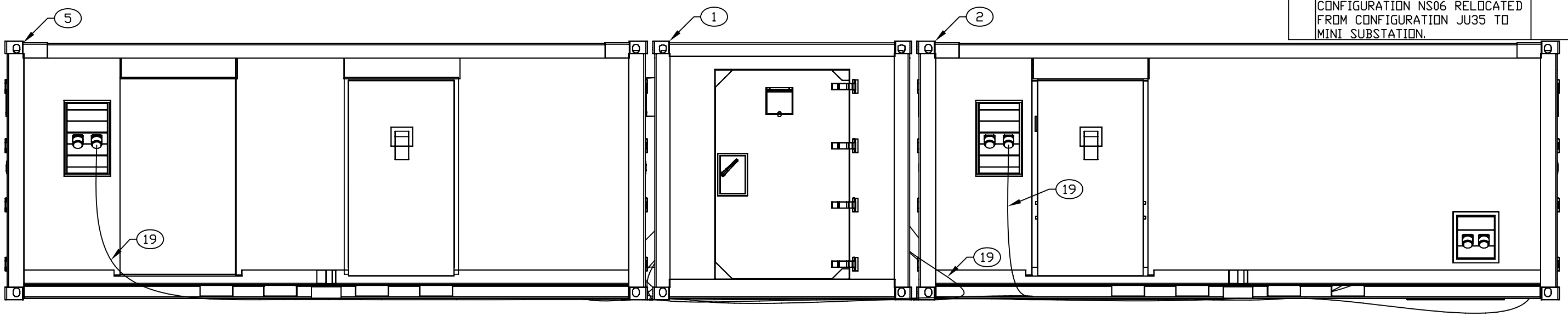

VIEW C–C SH 2

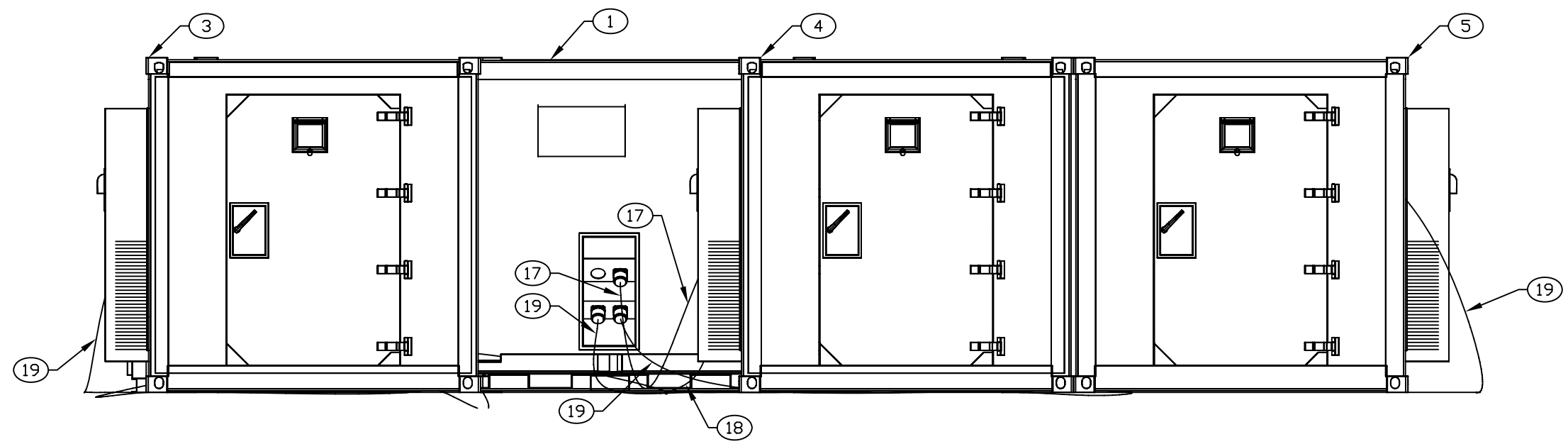

VIEW D–D SH 2
ROTATED 90° CCW

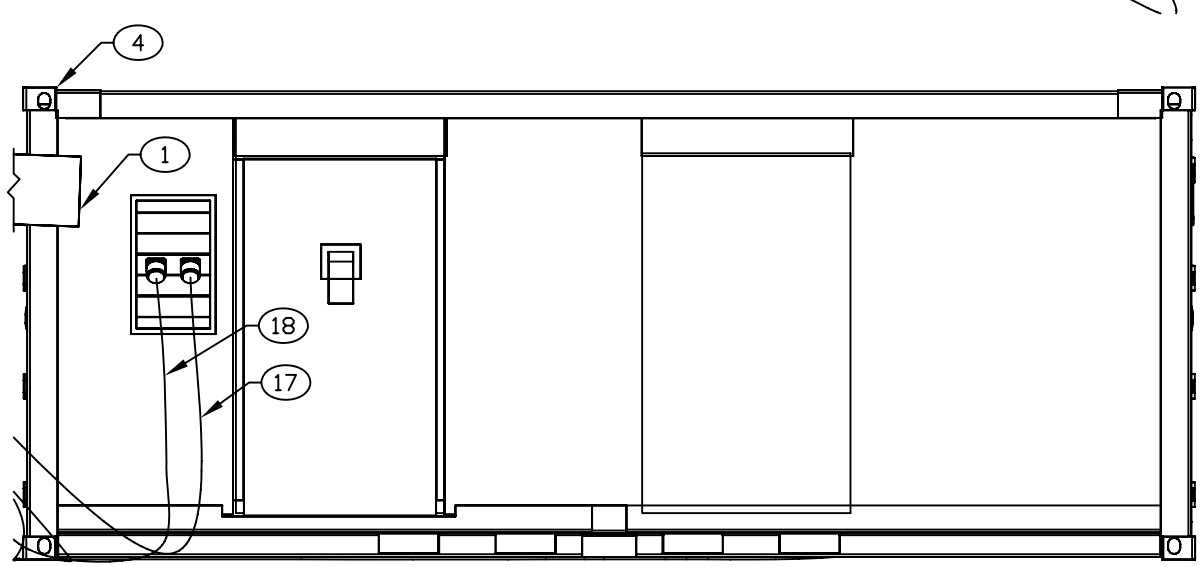

SECTION F–F SH 2
ROTATED 180°

ENGINEER	DATE	DRAWER	DATE	SIZE	CAGE CODE	DRAWING NUMBER	REV
M A BEUSTER	2005-12-07	MAB	2005-12-07	D	91145	MFNS080101	A
NEXT ASSEMBLY		CHECKER		SCALE		SHEET	
FINAL		PRV	2005-12-12	1/20		6	

REVISION HISTORY			
REV	DESCRIPTION	DATE	APPROVAL
B	REVISED AND PARTIALLY REDRAWN BY M. BEUSTER. (1) AIR HOSE MOVED.	2006-09-11	R A VOTAW

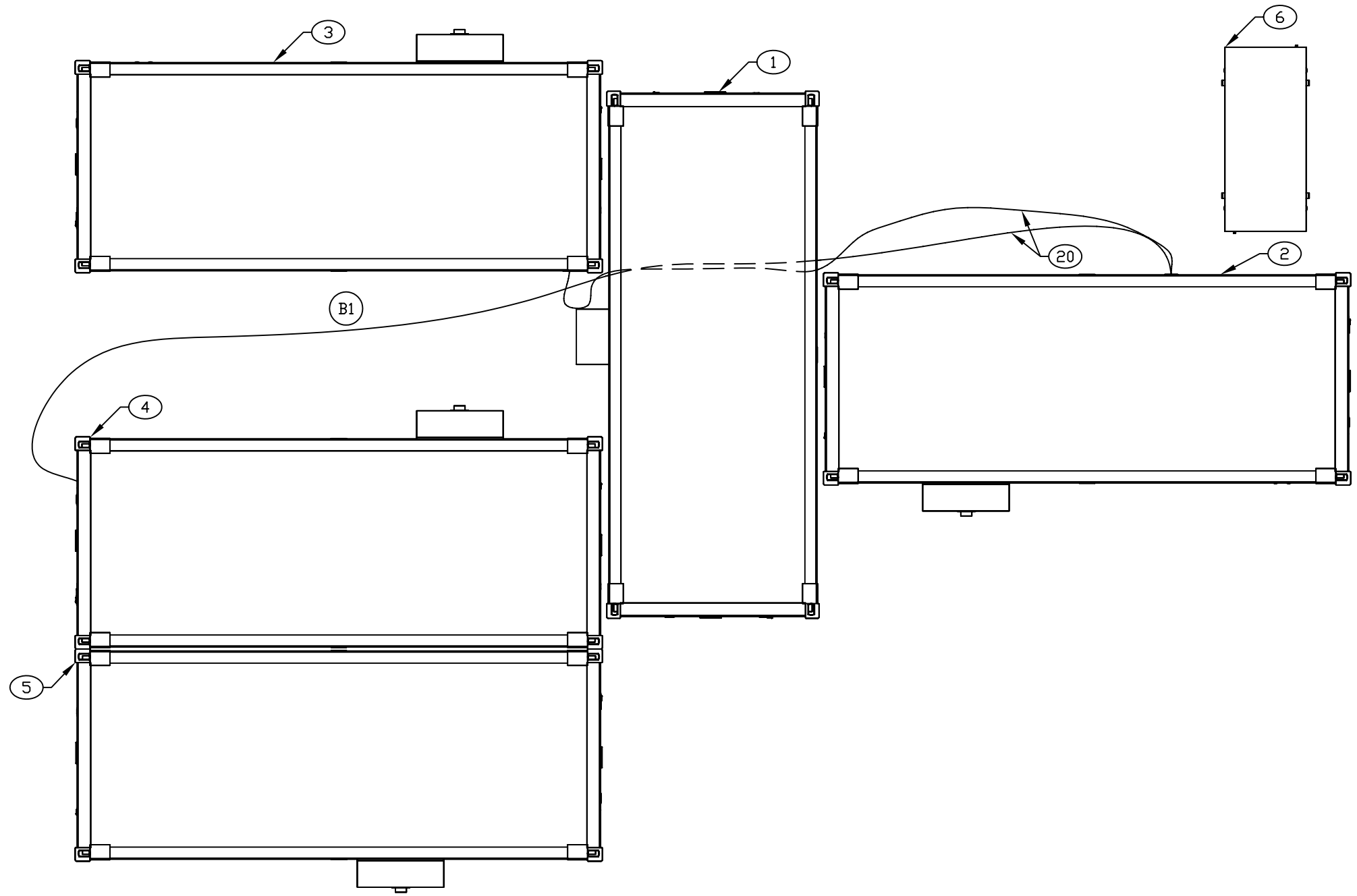

MECHANICAL PLAN

ENGINEER	DATE	DRAWER	DATE	SIZE	CAGE CODE	DRAWING NUMBER	REV
M A BEUSTER	2005-12-07	MAB	2005-12-07	D	91145	MFNS080101	B
NEXT ASSEMBLY		CHECKER		SCALE 1/30		SHEET 7	
FINAL		PRV	2005-12-12				