REVISION HISTORY			
REV	DESCRIPTION	DATE	APPROVAL
B	REVISED AND PARTIALLY REDRAWN BY M. BEUSTER. (2) ITEM PARTIALLY MOVED..	2006-08-28	R A VOTAW

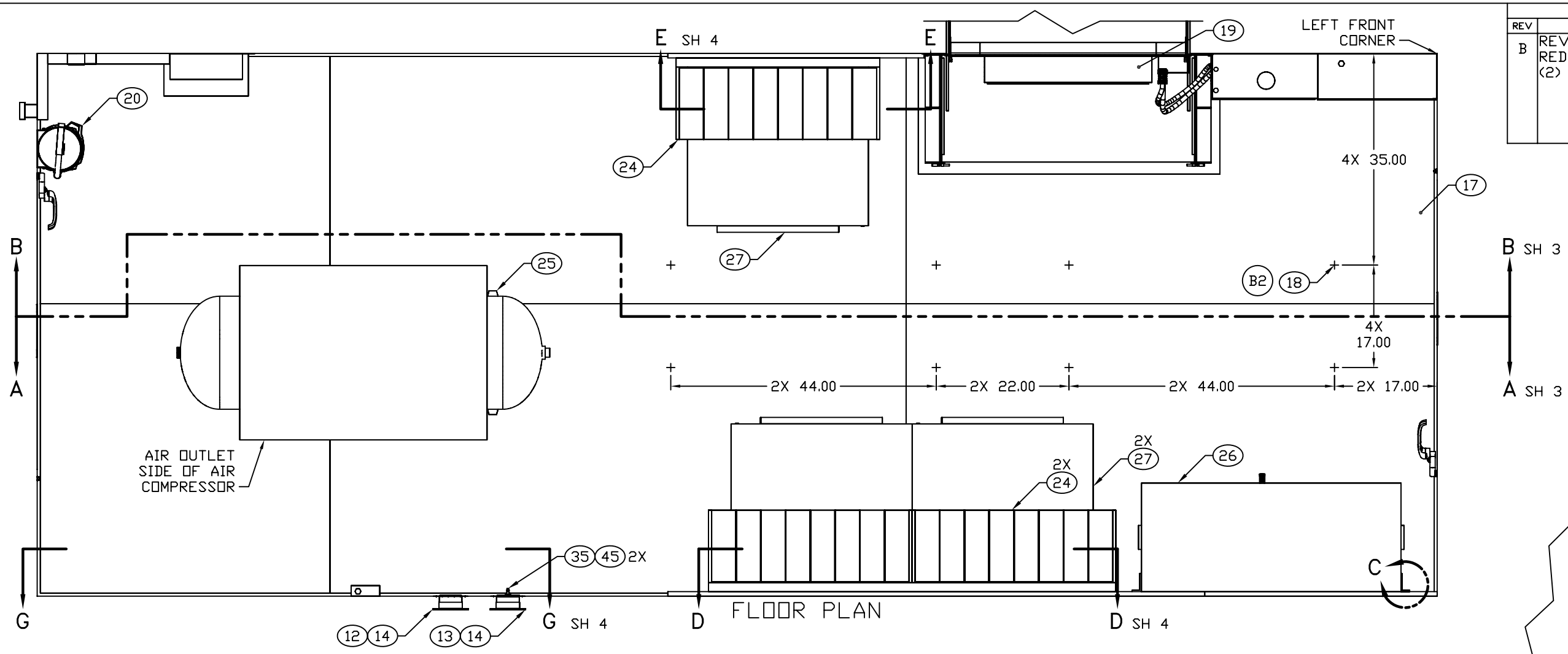

FLOOR PLAN

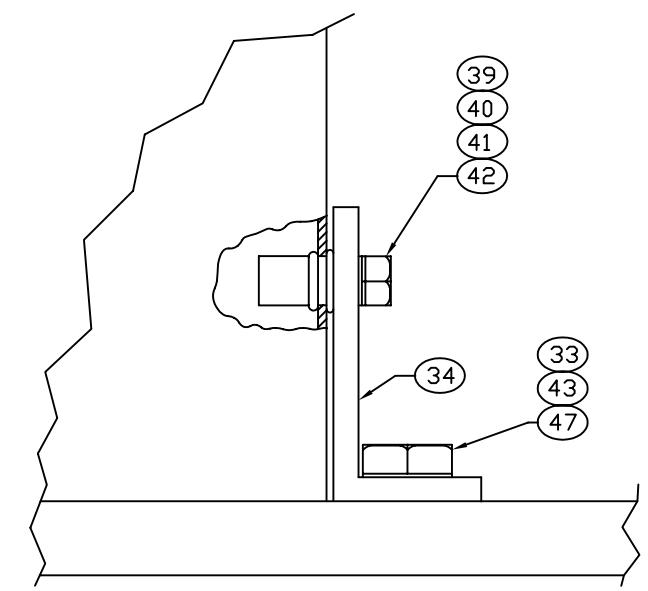

VIEW C
2X SHOWN
2X OPPOSITE
SCALE 1/1

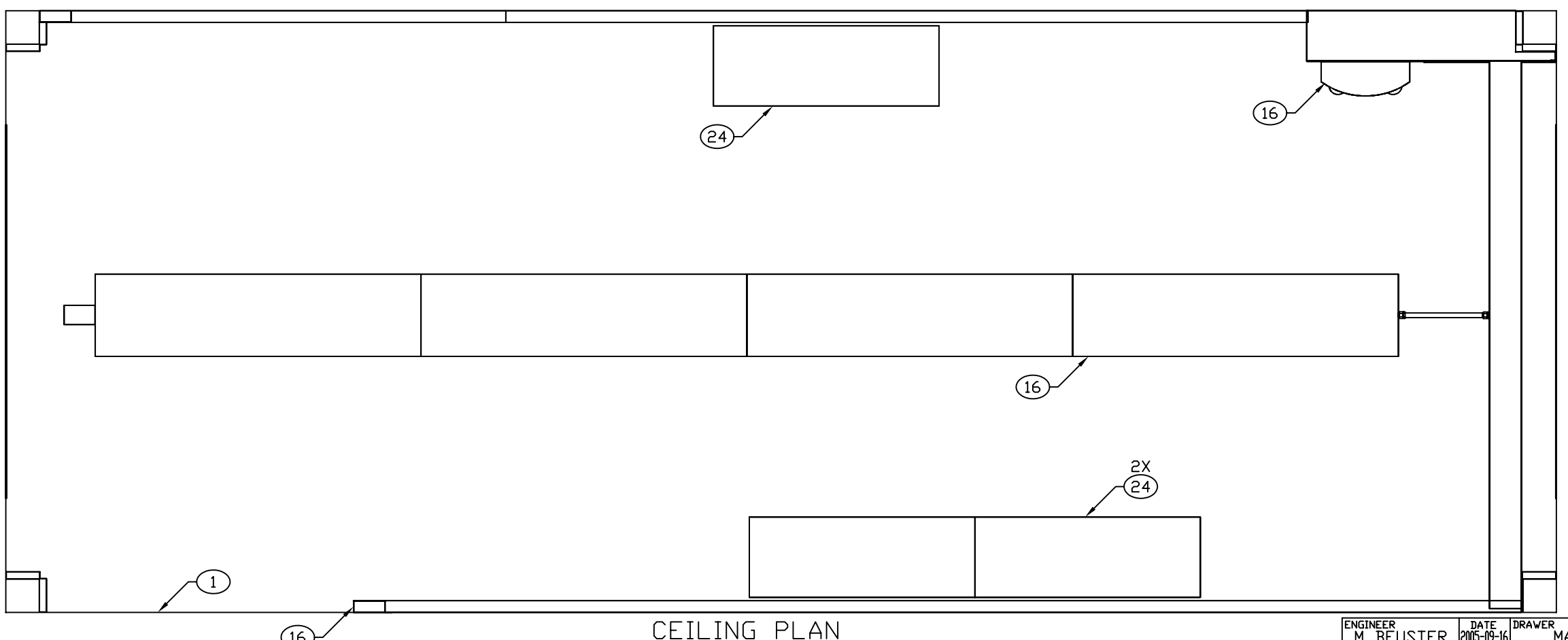

CEILING PLAN

ENGINEER	DATE	DRAWER	DATE	SIZE	CAGE CODE	DRAWING NUMBER	REV
M BEUSTER	2005-09-16	MAB	2005-09-16	D	91145	MFNS040101	B
NEXT ASSEMBLY		CHECKER		SCALE 1/10		SHEET 2	
MFNS080101		TN	2005-09-16				

REVISION HISTORY			
REV	DESCRIPTION	DATE	APPROVAL
C	REVISED AND PARTIALLY REDRAWN BY M. BEUSTER. ELECTRICAL CHANGED.	2006-09-14	R A VOTAW

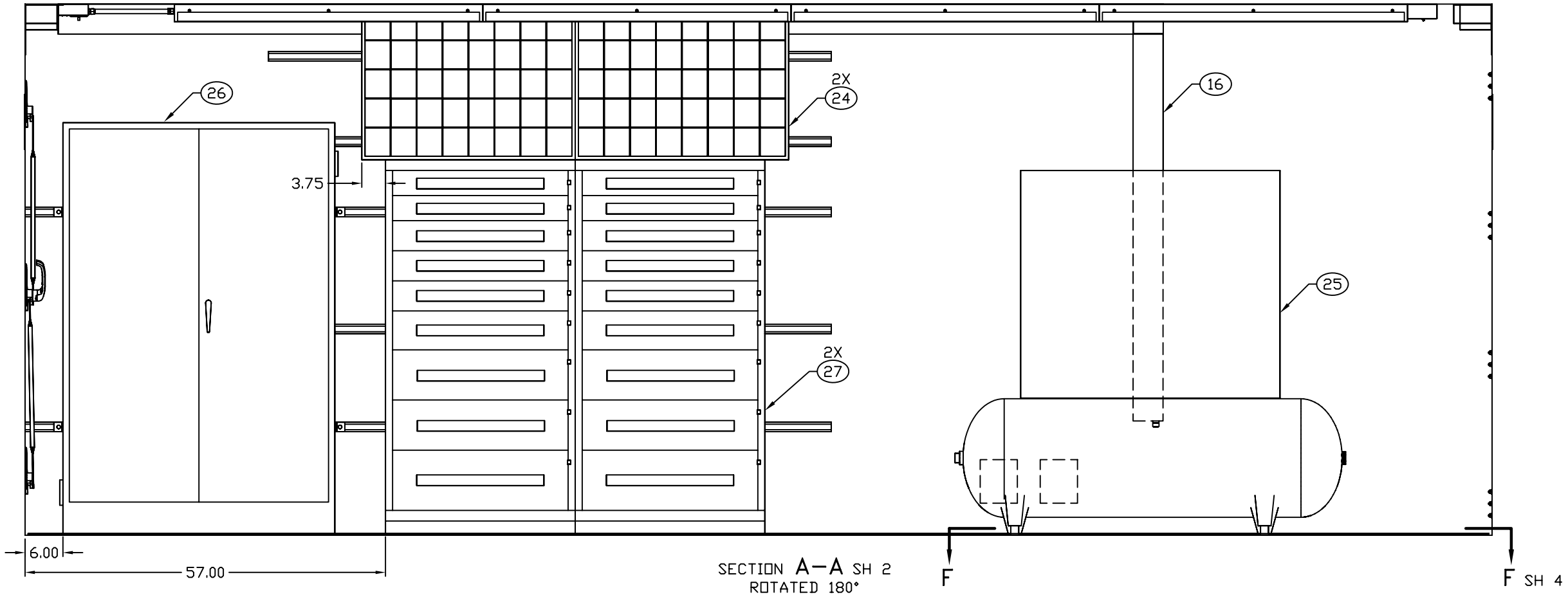

SECTION A–A SH 2
ROTATED 180°

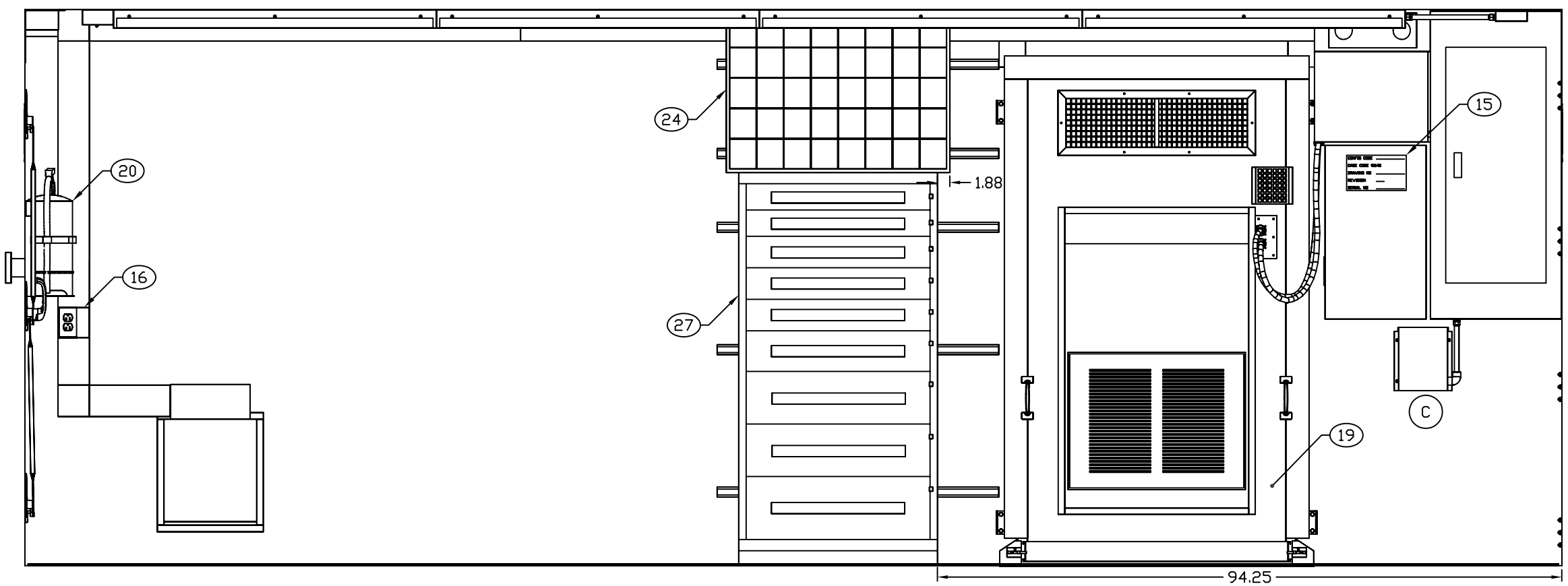

SECTION B–B SH 2

ENGINEER	DATE	DRAWER	DATE	SIZE	CAGE CODE	DRAWING NUMBER	REV
M BEUSTER	2005-09-16	MAB	2005-09-16	D	91145	MFNS040101	C
NEXT ASSEMBLY		CHECKER		SCALE		SHEET	
MFNS080101		TN	2005-09-16	1/10		3	