REVISION HISTORY			
REV	DESCRIPTION	DATE	APPROVAL
A	REVISED AND REDRAWN BY M. BEUSTER.	2006-10-23	R A VOTAW

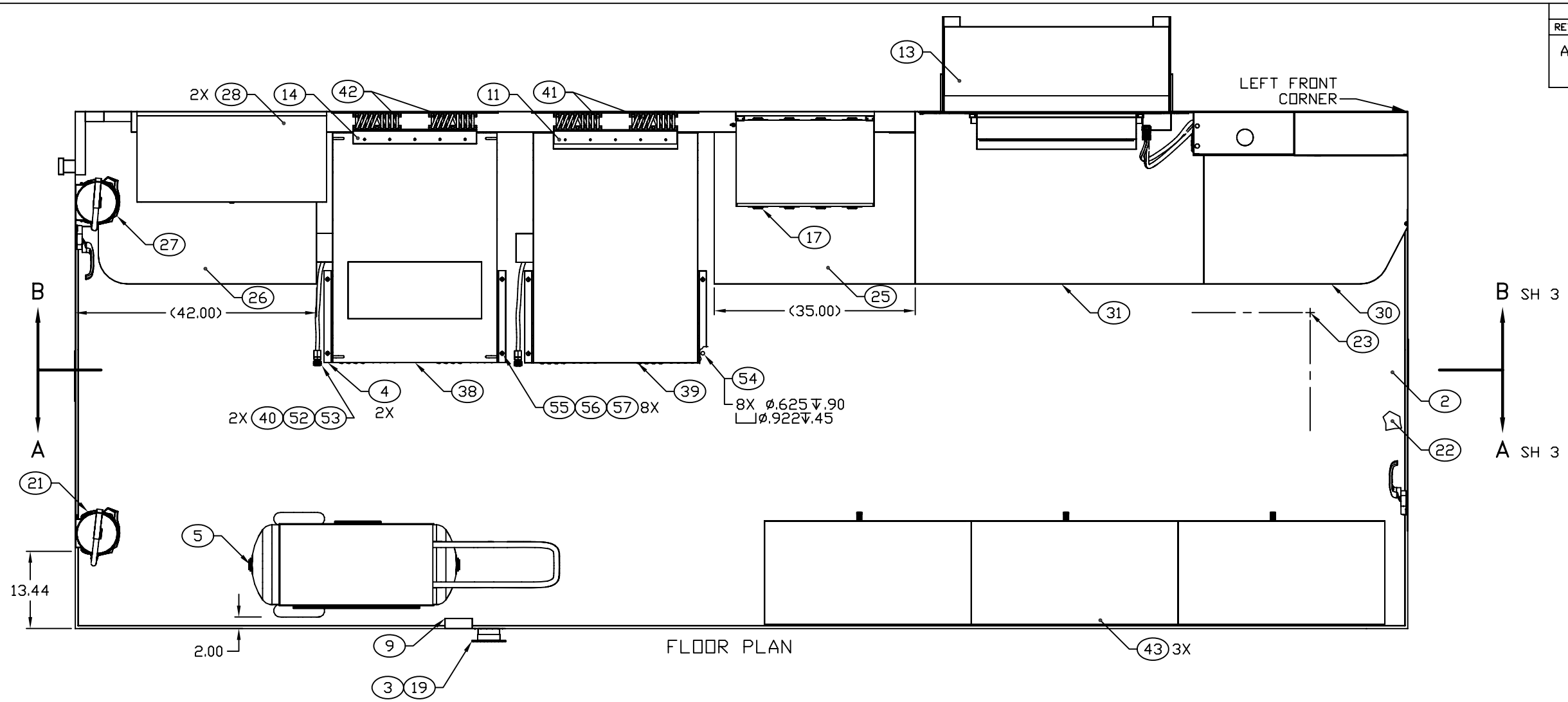

FLOOR PLAN

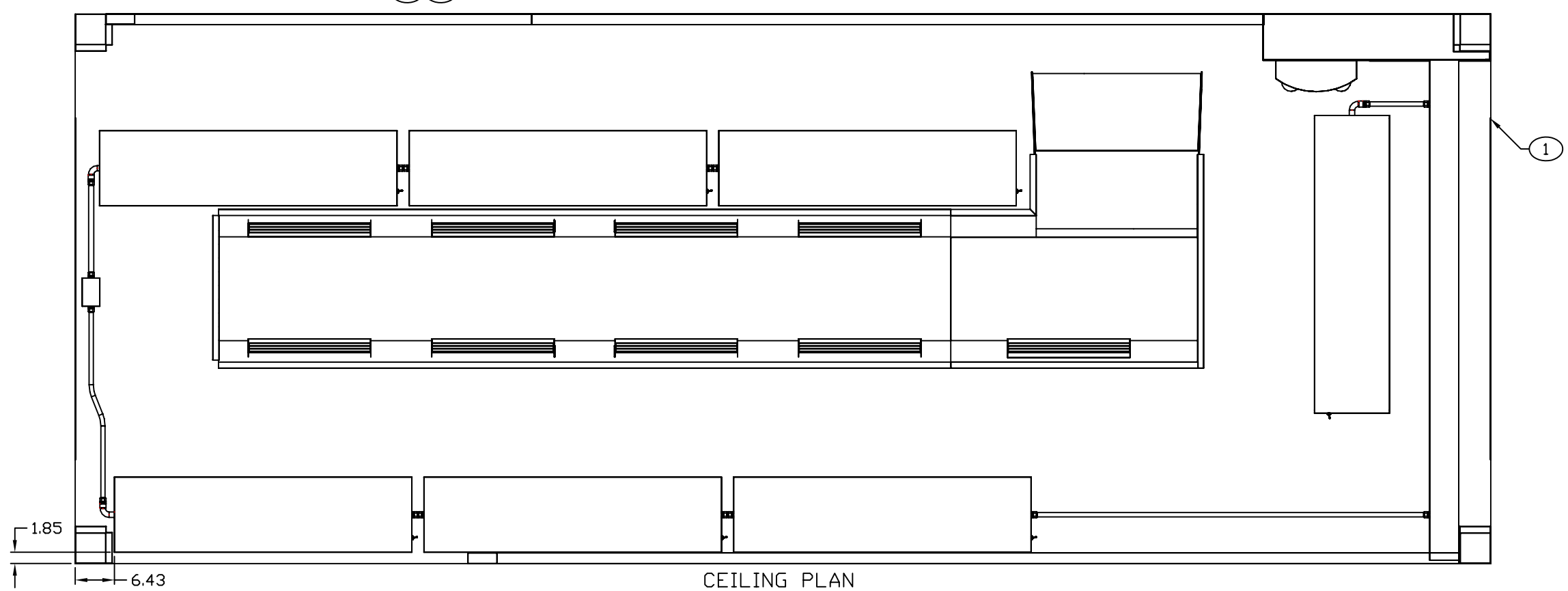

CEILING PLAN

ENGINEER	DATE	DRAWER	DATE	SIZE	CAGE CODE	DRAWING NUMBER	REV
M BEUSTER	1990-08-30	PRV	1992-08-08	D	91145	MFNA010101	A
NEXT ASSEMBLY	FINAL	CHECKER	TN	2006-10-19	SCALE 1/11	SHEET 2	

REVISION HISTORY			
REV	DESCRIPTION	DATE	APPROVAL
A	REVISED AND REDRAWN BY M. BEUSTER.	2006-10-23	R A VOTAW

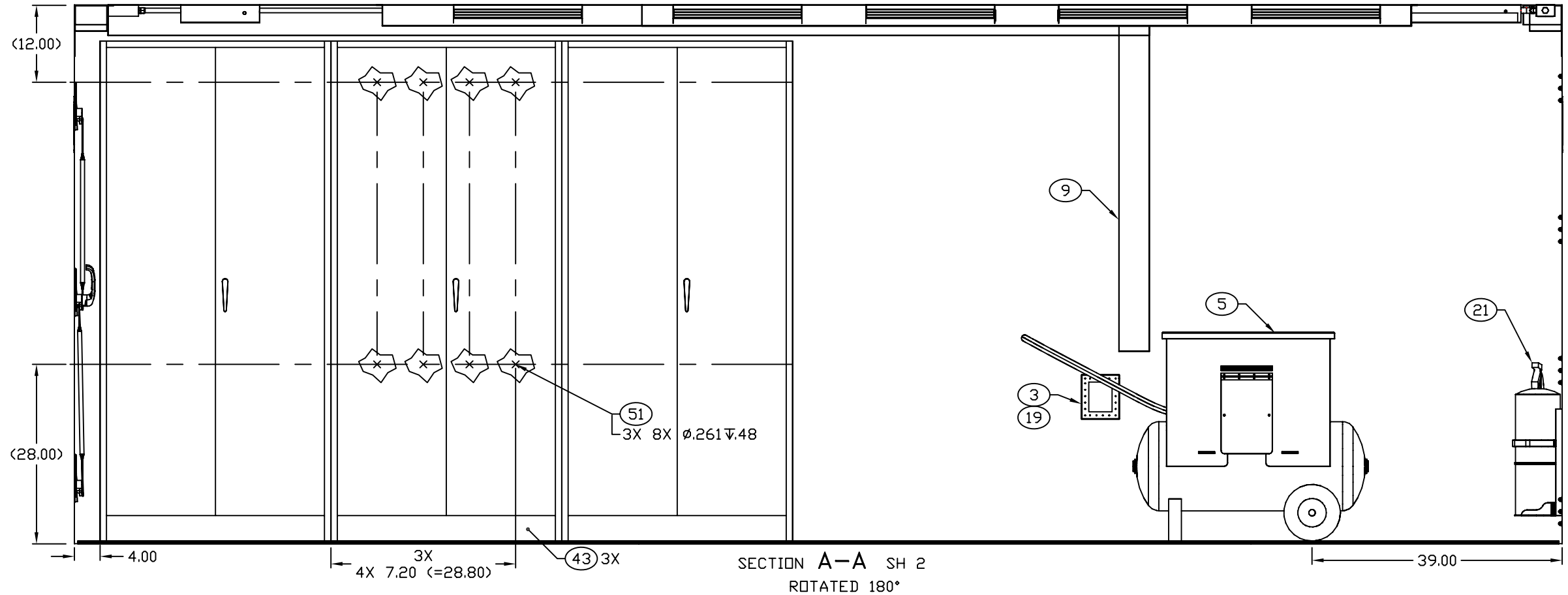

SECTION A–A SH 2
ROTATED 180°

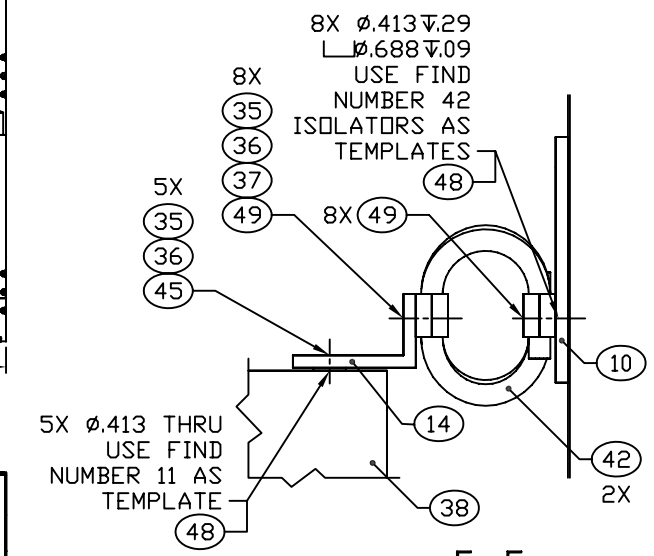

SECTION F–F
SCALE 1/2

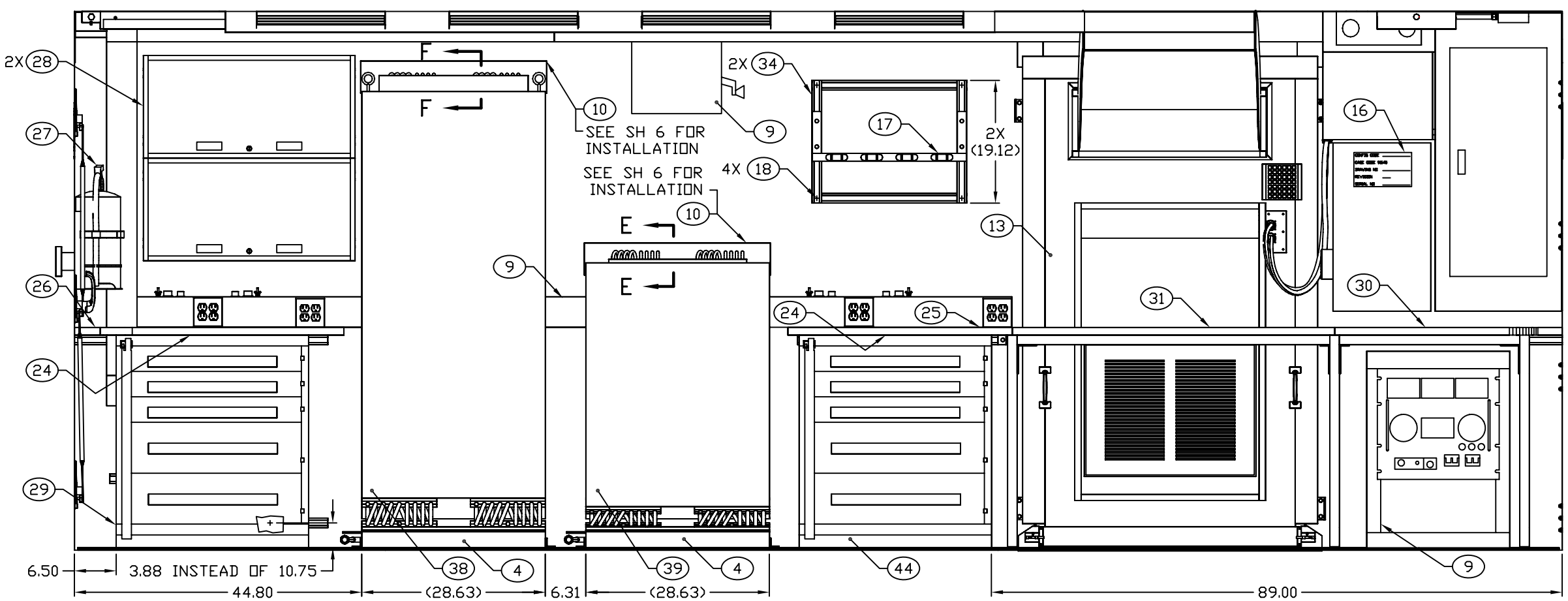

SECTION B–B SH 2

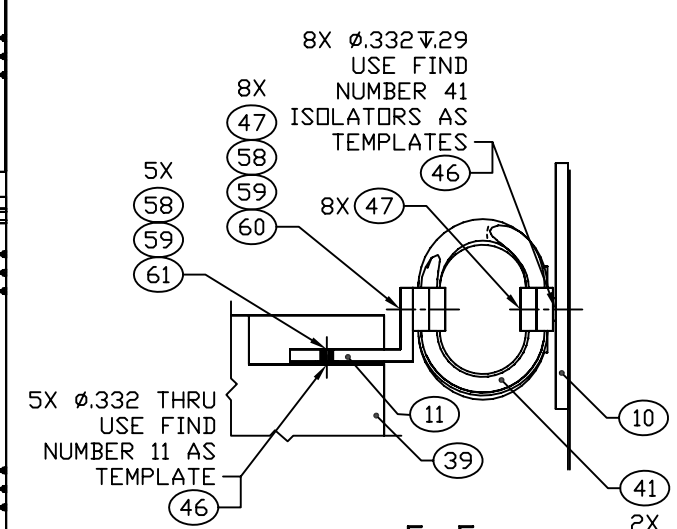

SECTION E–E
SCALE 1/2

ENGINEER	DATE	DRAWER	DATE	SIZE	CAGE CODE	DRAWING NUMBER	REV
M BEUSTER	1990-08-30	PRV	1992-08-08	D	91145	MFNA010101	A
NEXT ASSEMBLY	FINAL	CHECKER	TN	2006-10-19	SCALE 1/10		SHEET 3