REVISION HISTORY			
REV	DESCRIPTION	DATE	APPROVAL

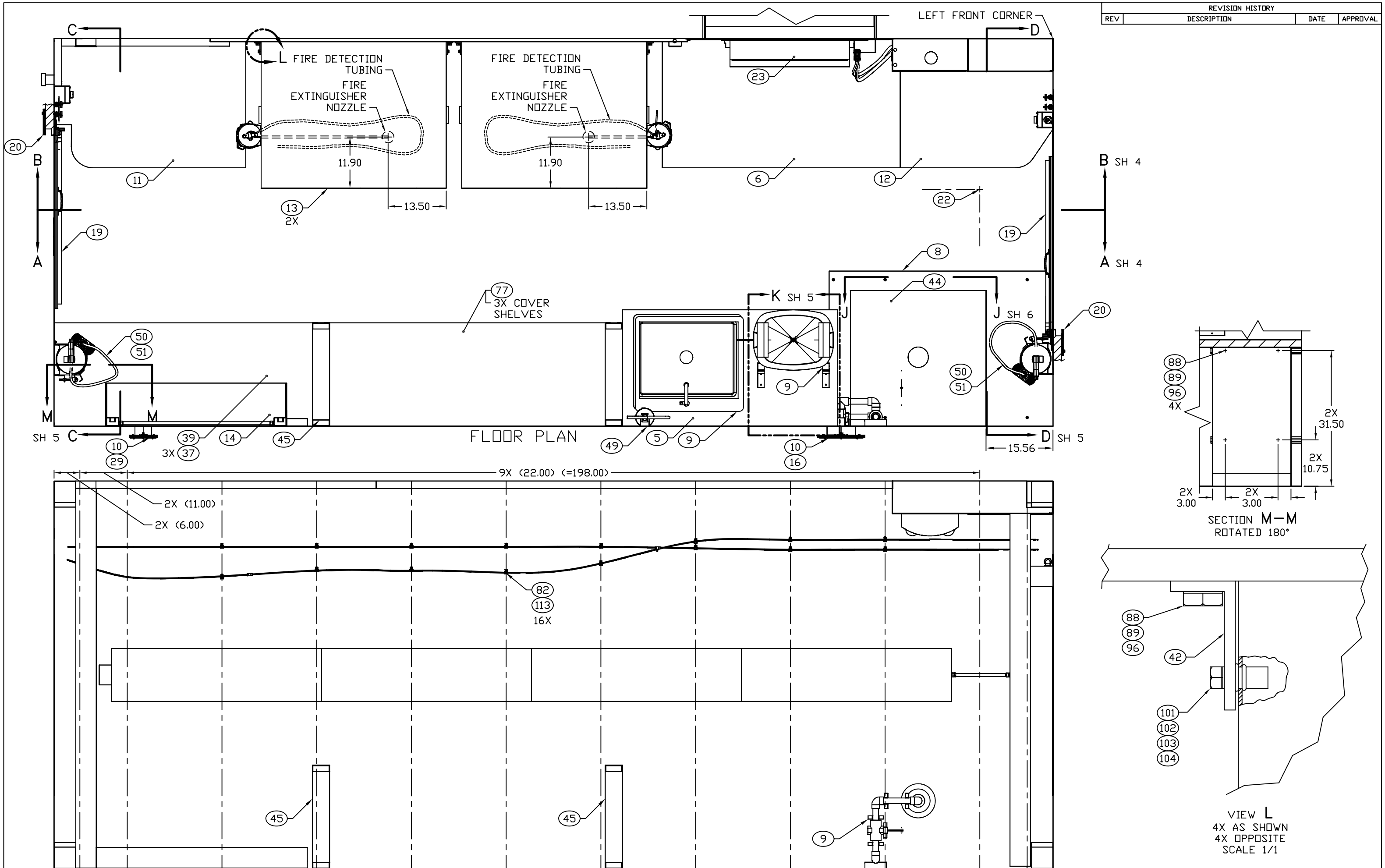

ENGINEER	DATE	DRAWER	DATE	SIZE	CAGE CODE	DRAWING NUMBER	REV
M BEUSTER	2007-02-12	MAB	2007-02-12	D	91145	MFLN010101	–
NEXT ASSEMBLY		CHECKER					
FINAL		TN	2007-02-12	SCALE 1/10		SHEET 3	

REVISION HISTORY			
REV	DESCRIPTION	DATE	APPROVAL

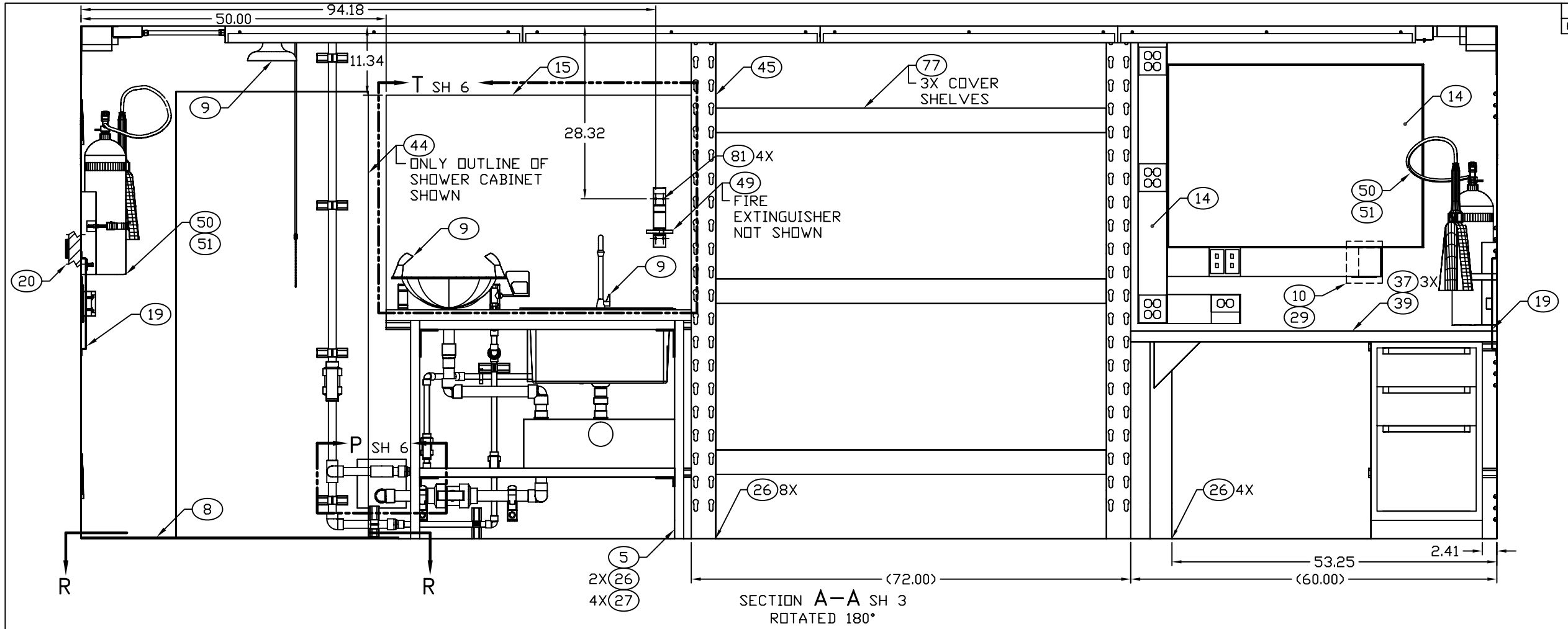

SECTION A–A SH 3
ROTATED 180°

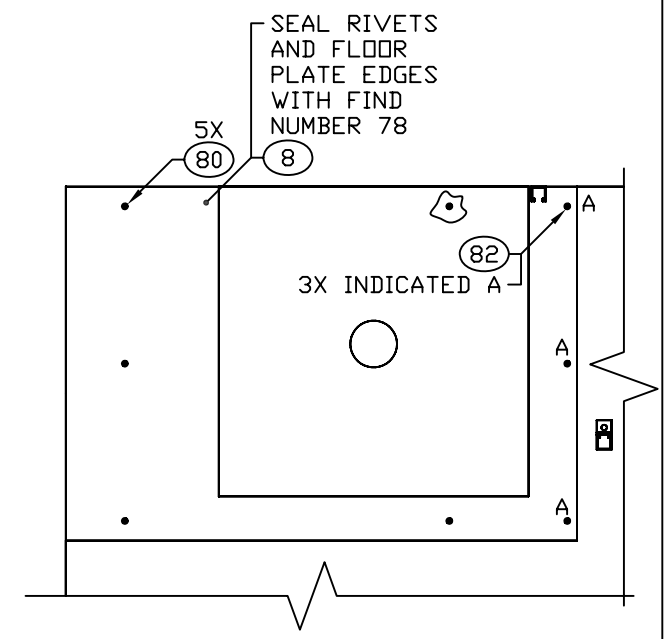

SECTION R–R

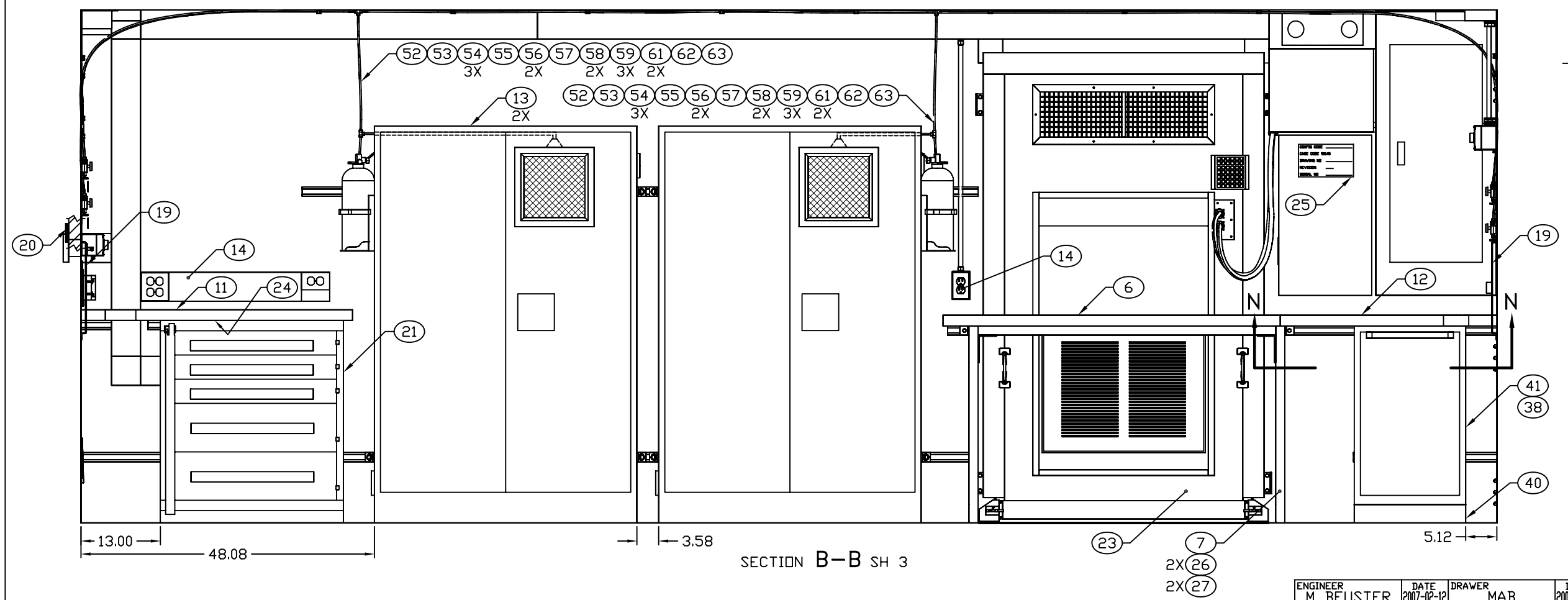

SECTION B–B SH 3

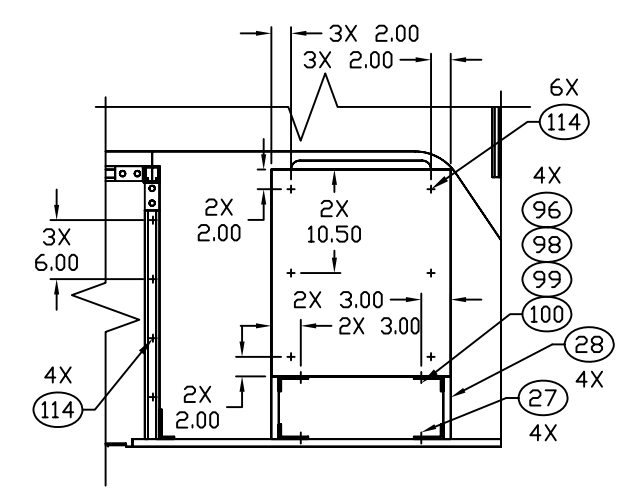

SECTION N–N

ENGINEER	DATE	DRAWER	DATE	SIZE	CAGE CODE	DRAWING NUMBER	REV
M BEUSTER	2007-02-12	MAB	2007-02-12	D	91145	MFLN010101	–
NEXT ASSEMBLY		CHECKER		SCALE 1/10		SHEET 4	
FINAL		TN	2007-02-12				