REVISION HISTORY			
REV	DESCRIPTION	DATE	APPROVAL

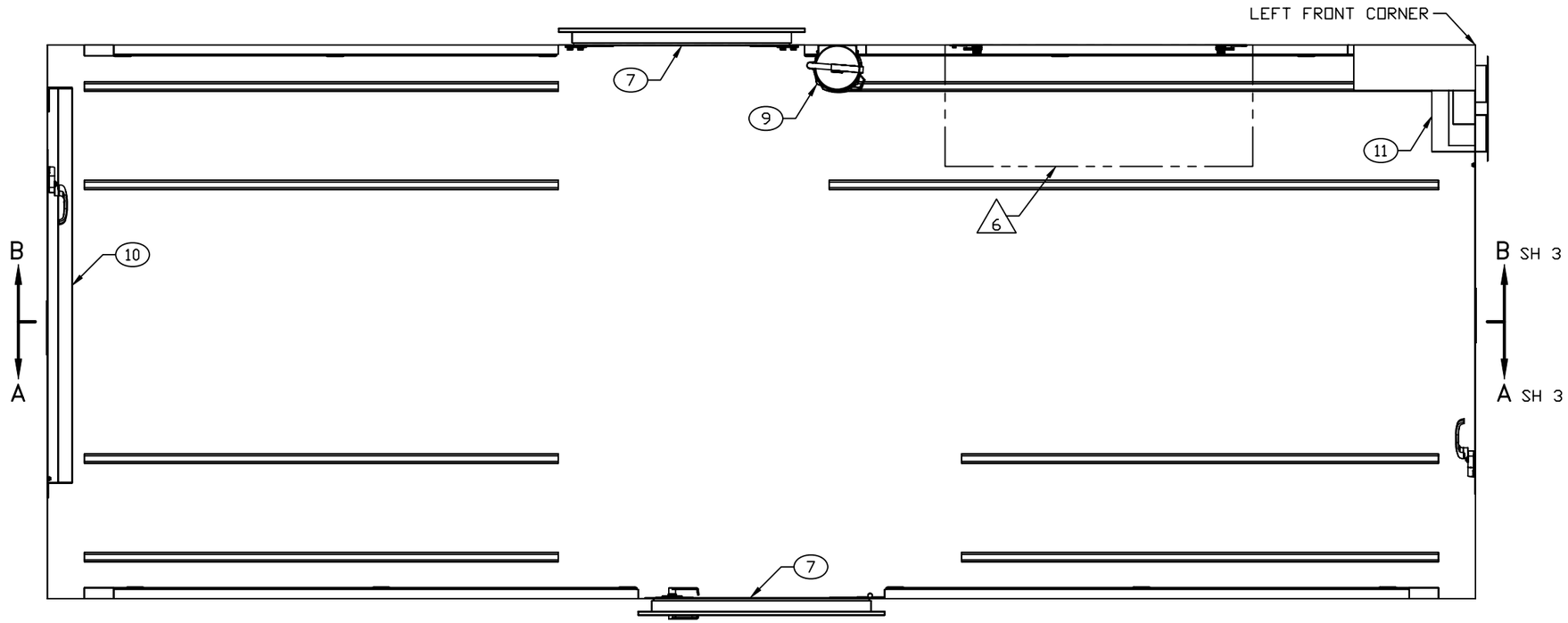

FLOOR PLAN

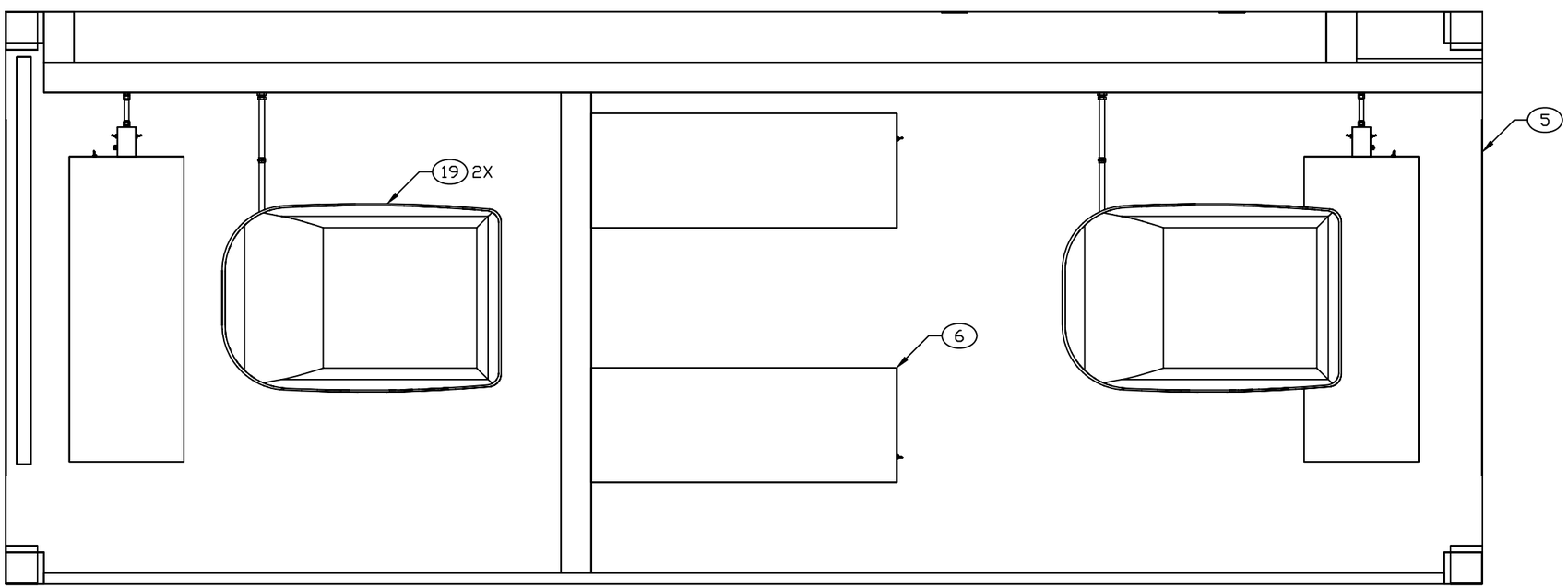

CEILING PLAN AND ROOF-MOUNTED AIR CONDITIONERS

ENGINEER	DATE	DRAWER	DATE	SIZE	CAGE CODE	DRAWING NUMBER	REV
T NGUYEN	XX-XX-XX	TN	XX-XX-XX	D	91145	MFLM080101	–
NEXT ASSEMBLY		CHECKER					
FINAL		MAB	XX-XX-XX	SCALE 1/11		SHEET 2	

REVISION HISTORY			
REV	DESCRIPTION	DATE	APPROVAL

NOTE:

3.1 SWITCH LATCH LOCATIONS AS SHOWN.

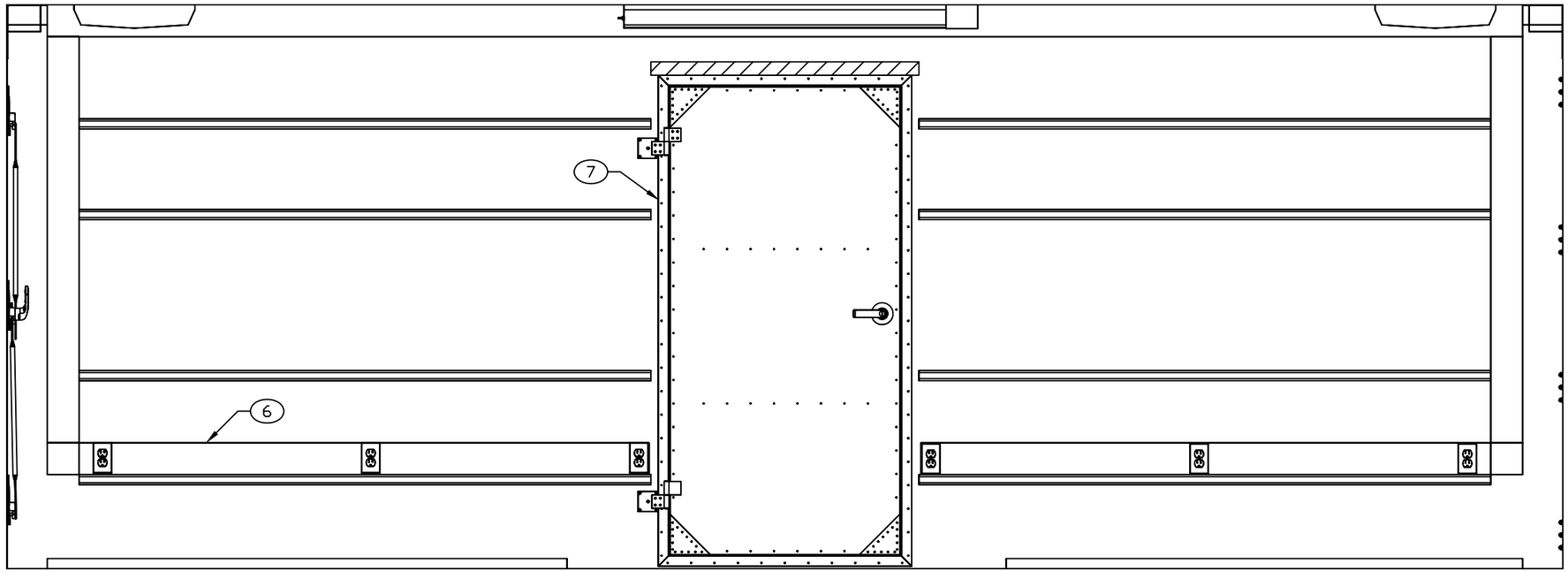

SECTION A–A SHEET 2
ROTATED 180°

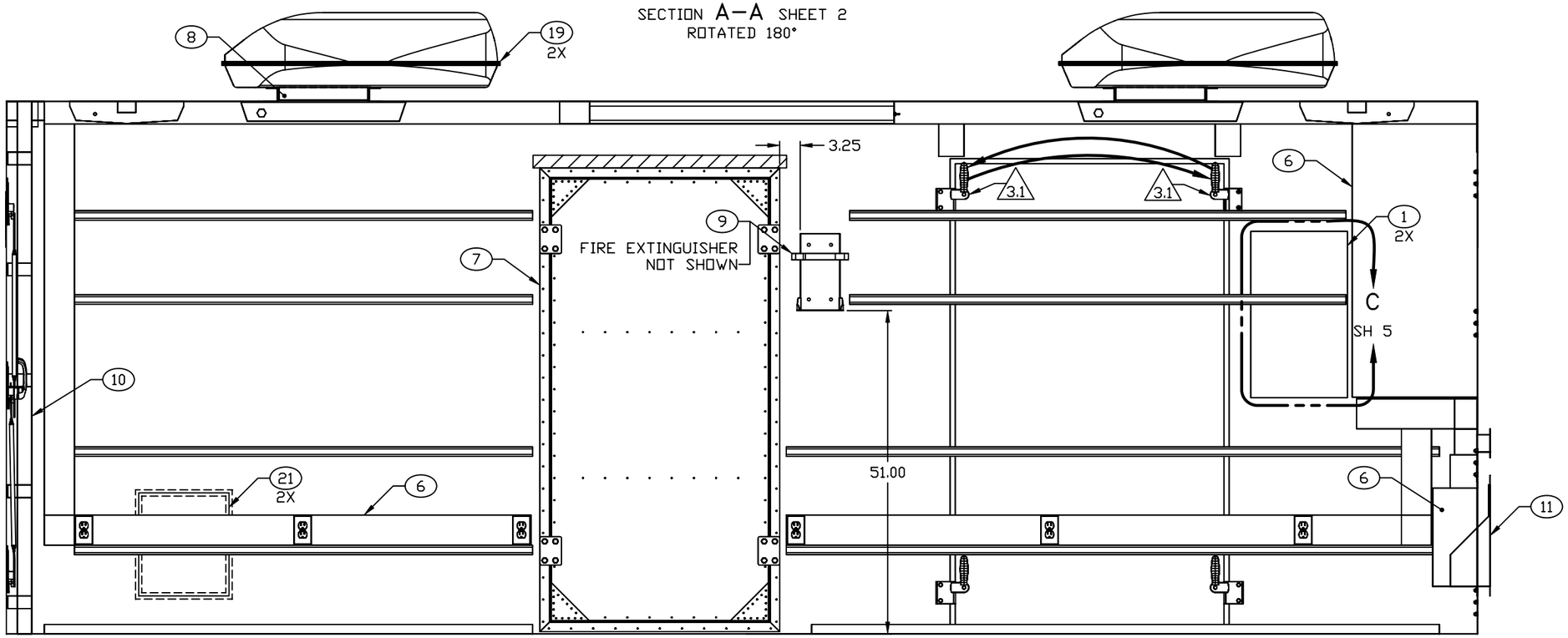

SECTION B–B SHEET 2

ENGINEER	DATE	DRAWER	DATE	SIZE	CAGE CODE	DRAWING NUMBER	REV
T NGUYEN	XX-XX-XX	TN	XX-XX-XX	D	91145	MFLM080101	–
NEXT ASSEMBLY		CHECKER					
FINAL		MAB	XX-XX-XX	SCALE 1/10		SHEET 3	