REVISION HISTORY			
REV	DESCRIPTION	DATE	APPROVAL
A	REVISED AND PARTIALLY REDRAWN BY M. BEUSTER. (1) ITEM ADDED.	2006-01-31	R A VOTAW

NOTE(S):

3.1 USE MOTOR STAND BASE PLATE AS PATTERN FOR HOLE LAYOUT

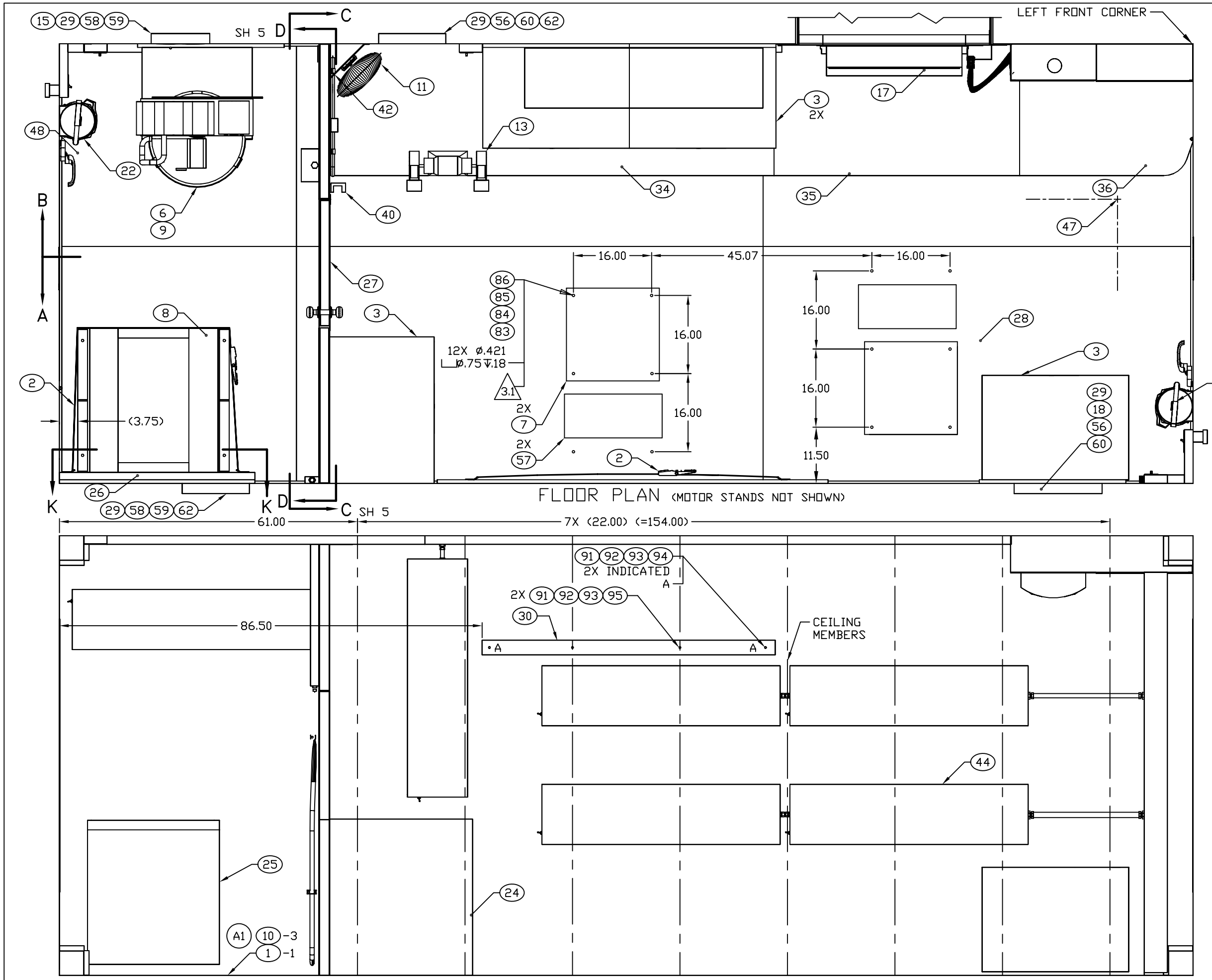

FLOOR PLAN (MOTOR STANDS NOT SHOWN)

CEILING PLAN

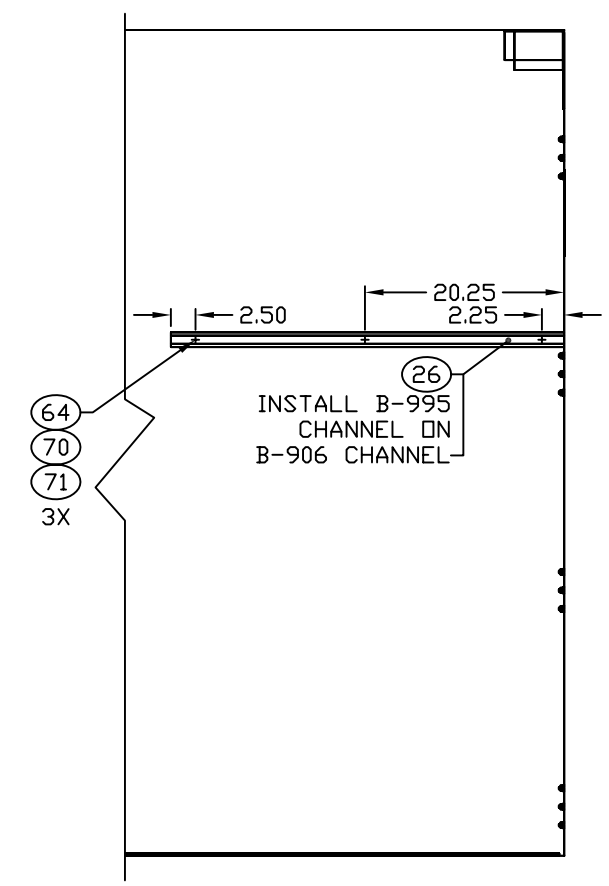

SECTION K–K
ROTATED 180°
REFRIGERATOR AND STRAP NOT SHOWN

ENGINEER	DATE	DRAWER	DATE	SIZE	CAGE CODE	DRAWING NUMBER	REV
M BEUSTER	2005-12-06	MAB	2005-12-06	D	91145	MFLM040201	A
NEXT ASSEMBLY		CHECKER		SCALE 1/10		SHEET 3	
FINAL		TN	2005-12-13				

REVISION HISTORY			
REV	DESCRIPTION	DATE	APPROVAL

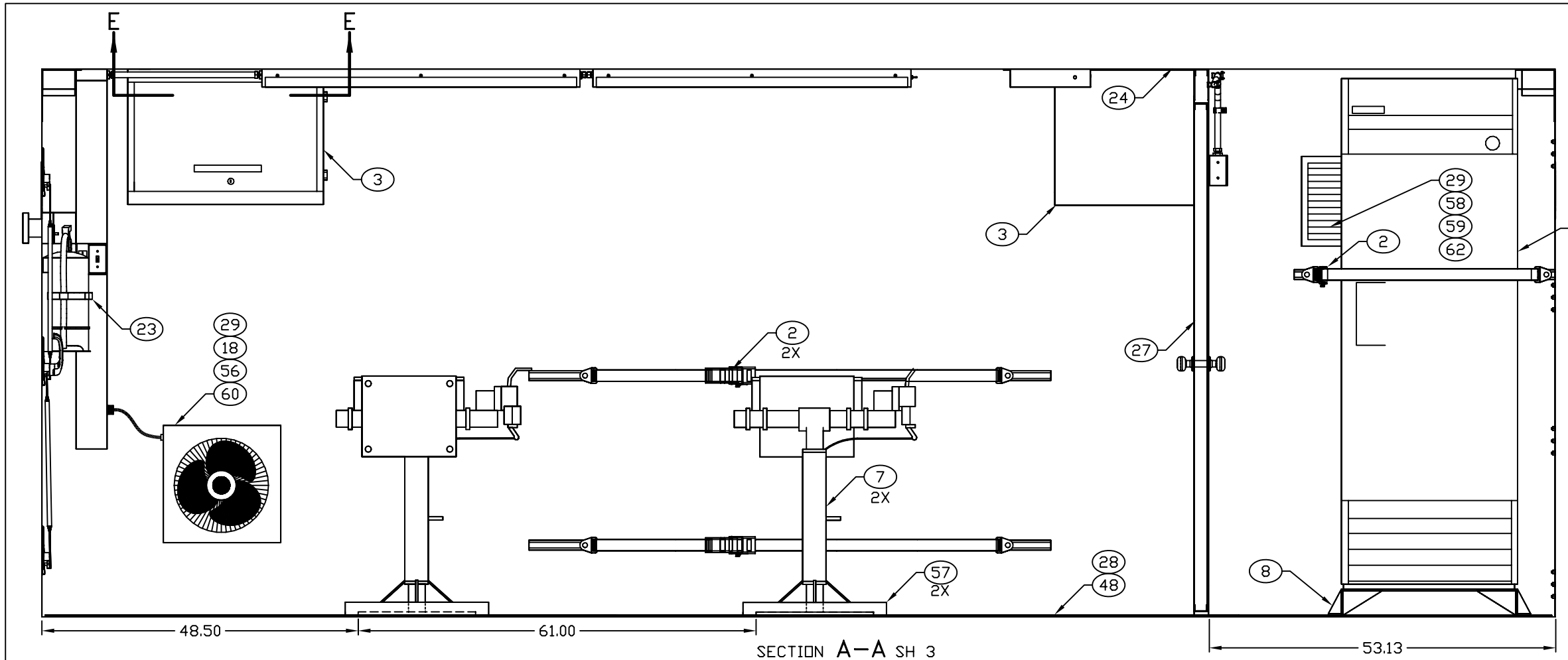

SECTION A–A SH 3
ROTATED 180°

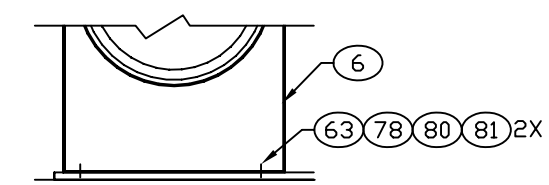

SECTION G–G

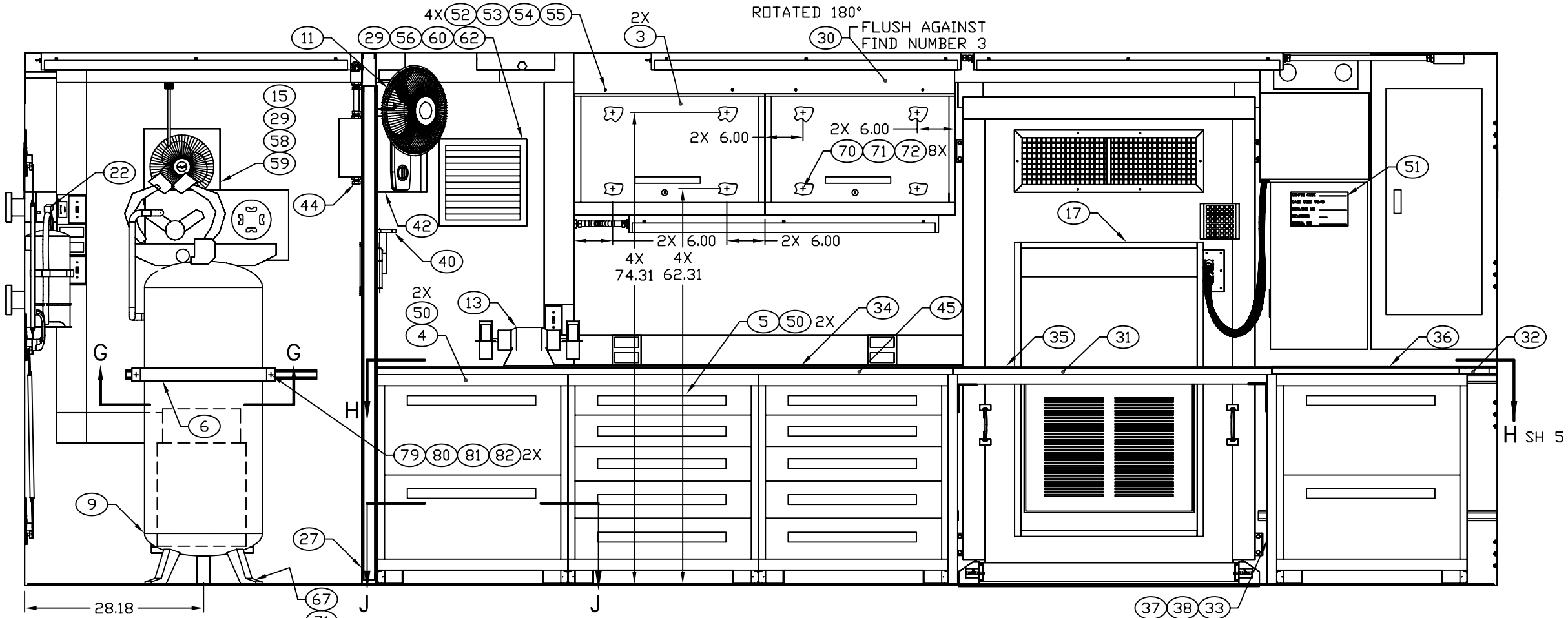

SECTION B–B SH 3

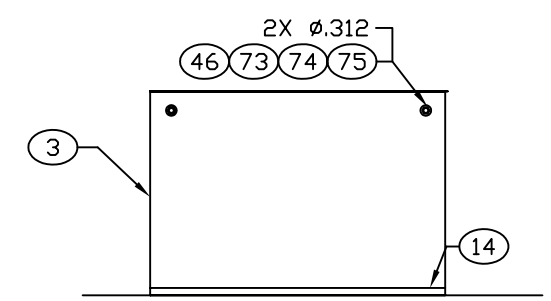

SECTION E–E

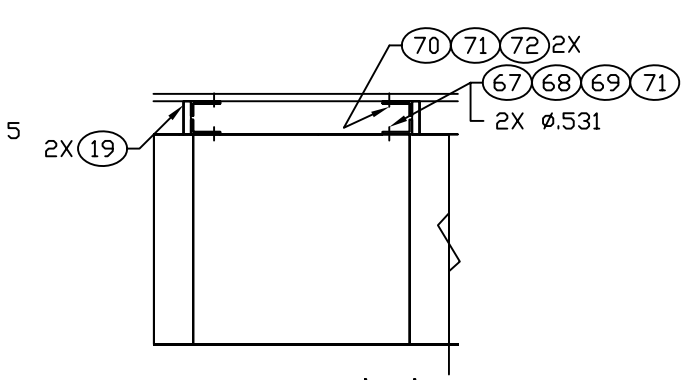

8X SECTION J–J

ENGINEER	DATE	DRAWER	DATE	SIZE	CAGE CODE	DRAWING NUMBER	REV
M BEUSTER	2005-12-06	MAB	2005-12-06	D	91145	MFLM040201	–
NEXT ASSEMBLY		CHECKER		SCALE		SHEET	
FINAL		TN	2005-12-13	1/10		4	