REVISION HISTORY			
REV	DESCRIPTION	DATE	APPROVAL
A	(2) ITEM DELETED.	99-08-20	R. A. VOTAW
B	(5) FIND NO ADDED.		

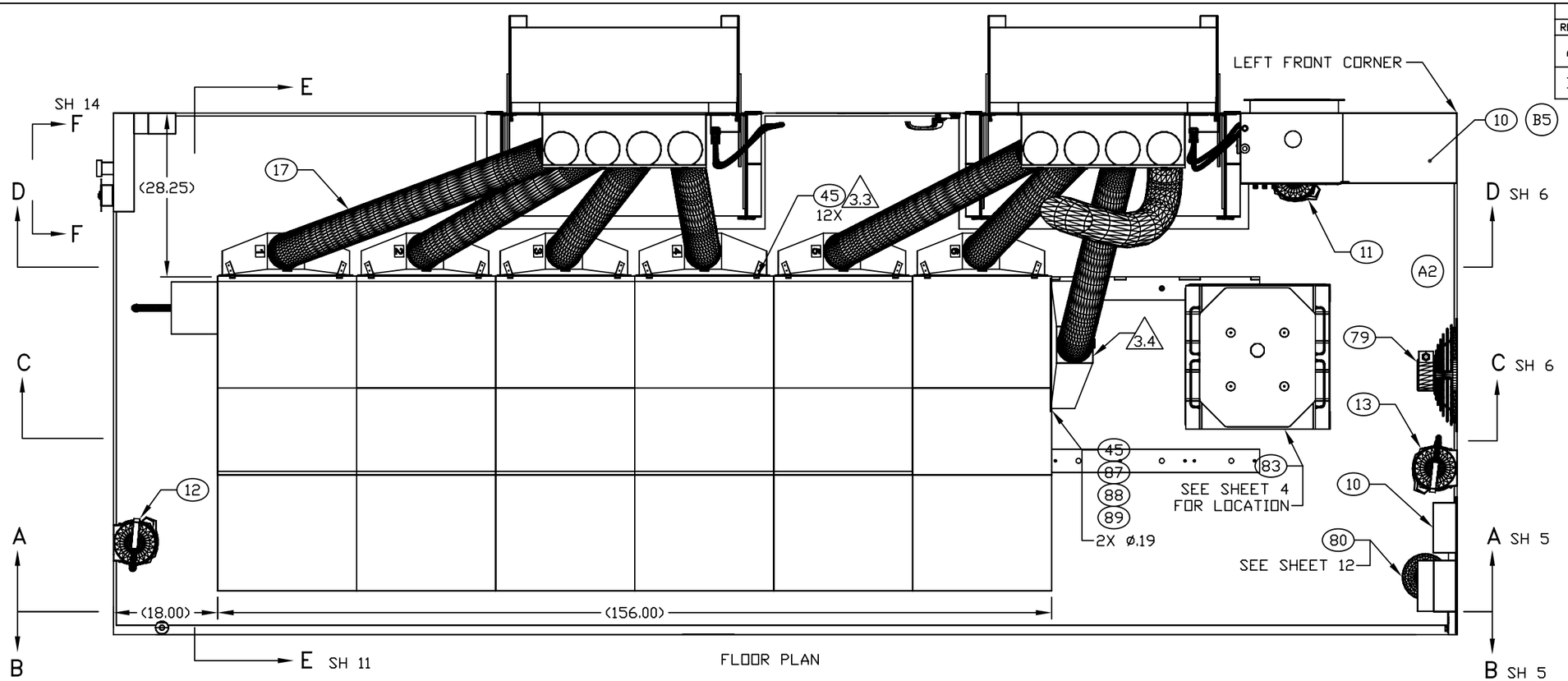

FLOOR PLAN

NOTES:

3.1 USE FIND NO 22 AS TEMPLATE TO LOCATE HOLES.

3.2 USE FIND NO 23 AS TEMPLATE TO LOCATE HOLES.

3.3 USE FIND NO 45, SCREW, TO SECURE LOWER TRANSITION COOLING DUCT TO THE BASE OF THE CASS TEST STATION.

3.4 TEMPORARILY INSTALL PLENUM PORT AS SHOWN WHEN RF TEST SET IS IN USE. WHEN HPDTS IS DELIVERED, REMOVE AND REINSTALL PLENUM PORT AS SHOWN ON SHEET 7.

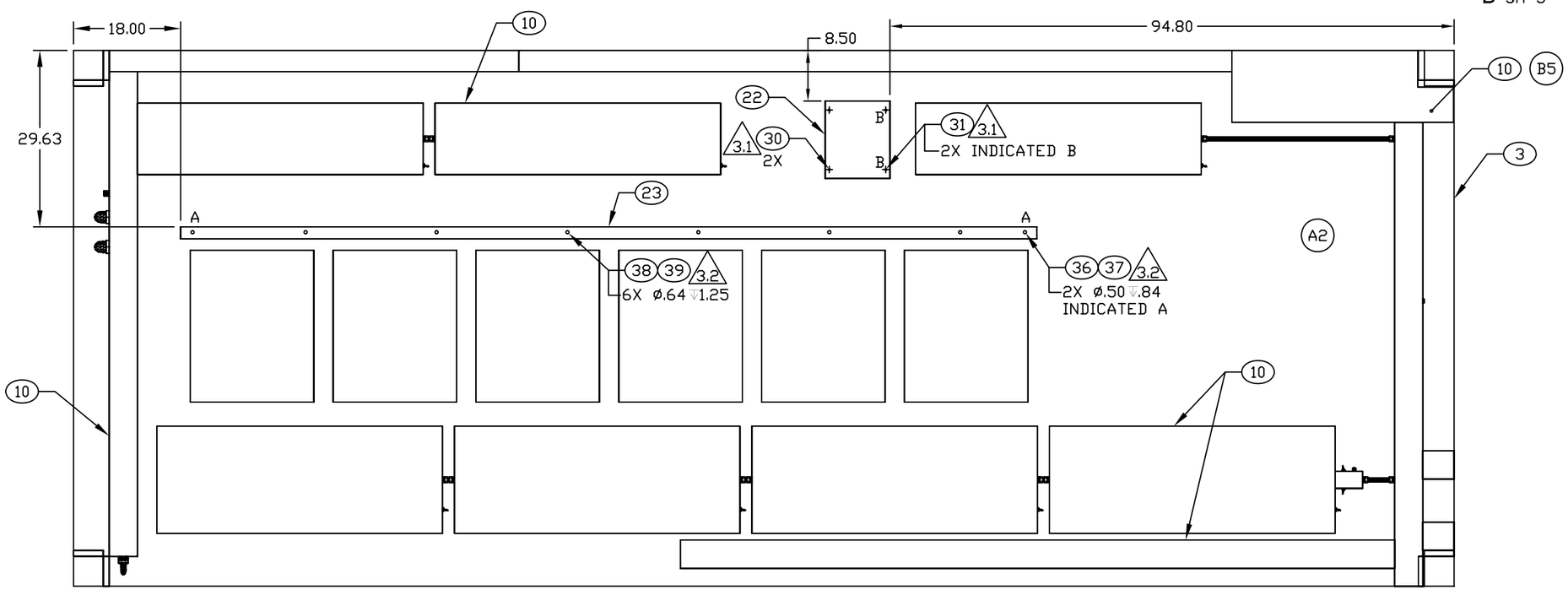

CEILING PLAN

MOBILE FACILITY EQUIPPED WITH RF TEST SET
AND ANTENNA MOUNT

ENGINEER	DATE	DRAWER	DATE	SIZE	CAGE CODE	DRAWING NUMBER	REV
T NGUYEN	99-04	PRV	99-12-09	D	91145	MFKA300101	B
NEXT ASSEMBLY		CHECKER		SCALE		SHEET	
FINAL		MAB	99-05-20	1/11		3	

REV	DESCRIPTION	DATE	APPROVAL
A	(2) ITEM DELETED. (3) ITEM ADDED. (4) NOTED DELETED. (5) DIMENSION CHANGED. (6) PLUMBING CONFIGURATION CHANGED. (7) FIRE EXTINGUISHER RELOCATED.	99-08-20	R. A. VOTAW
B	(2) NOTE DELETED. (4) ITEM DELETED. (6) FIND NUMBER CHANGED.		

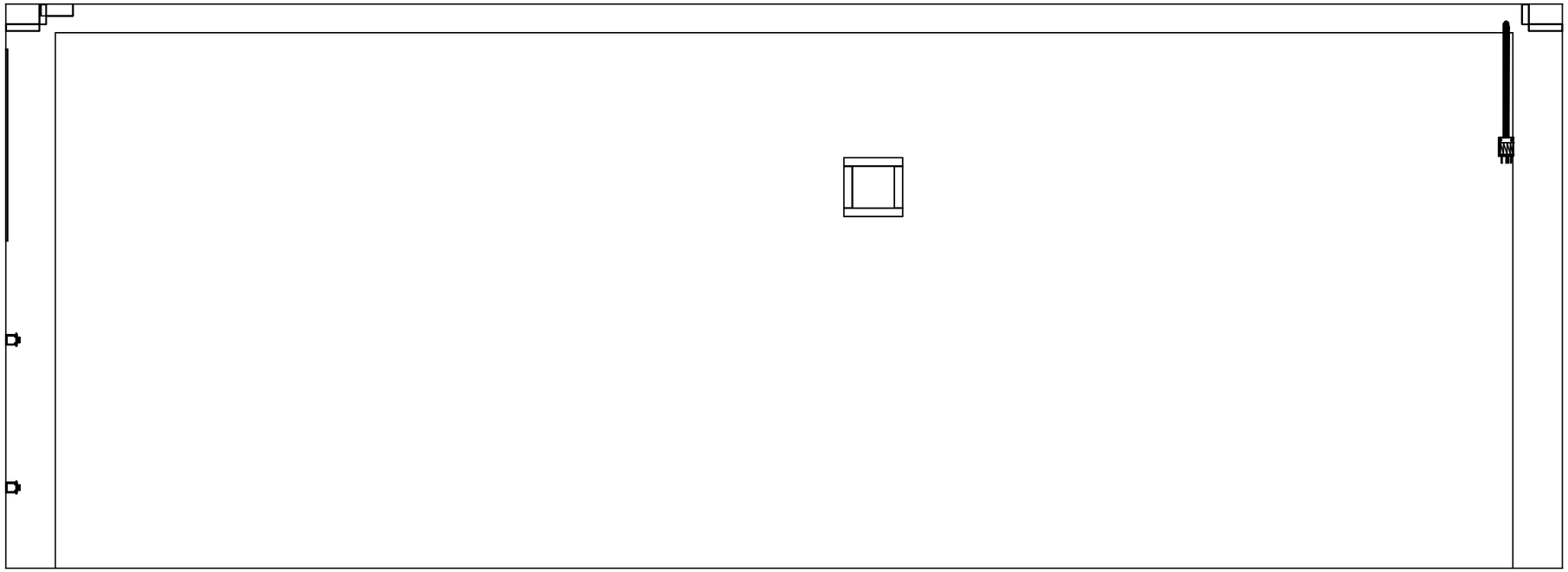

SECTION B–B SH 3
ROTATED 180°

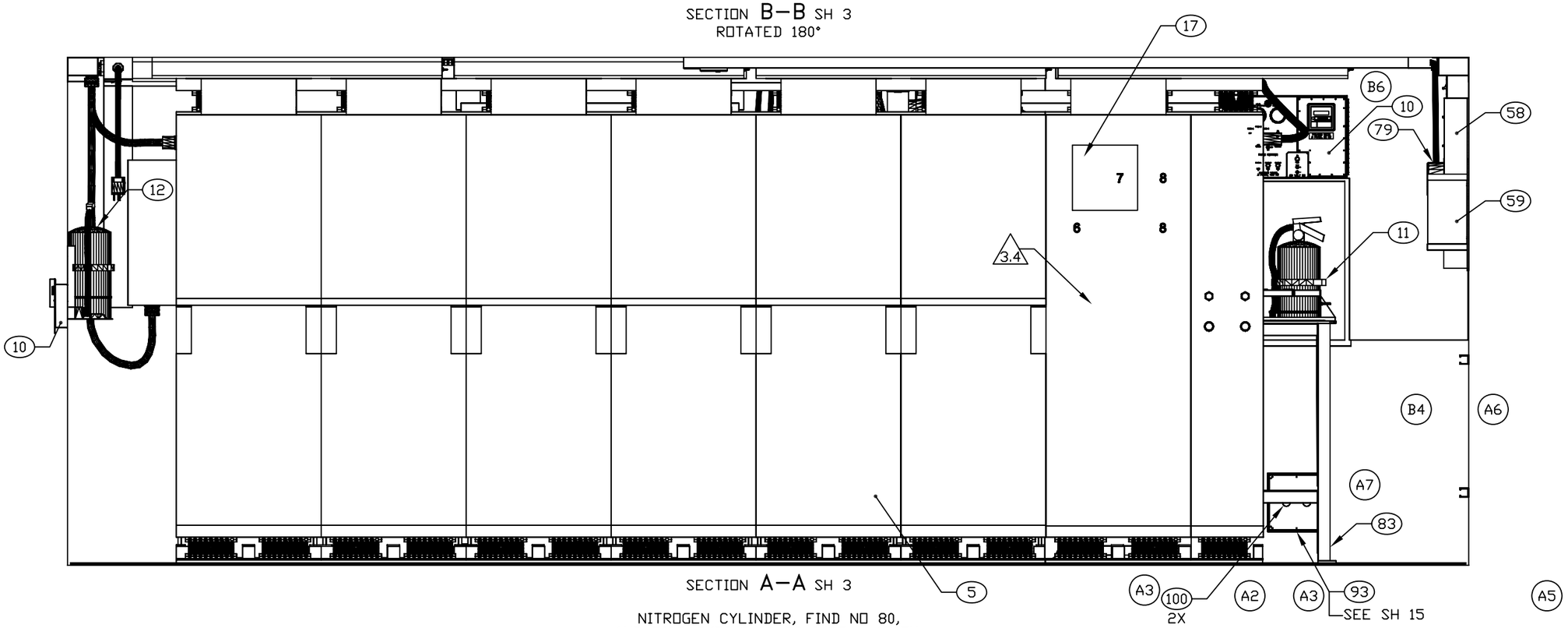

SECTION A–A SH 3

NITROGEN CYLINDER, FIND NO 80,
AND FIRE EXTINGUISHER INSTALLATION,
FIND NO 13 NOT SHOWN

A4

B2

ENGINEER	DATE	DRAWER	DATE	SIZE	CAGE CODE	DRAWING NUMBER	REV
T NGUYEN	99-04	PRV	99-12-09	D	91145	MFKA300101	B
NEXT ASSEMBLY		CHECKER		SCALE		SHEET	
FINAL		MAB	99-05-20	1/10		5	

REV	DESCRIPTION	DATE	APPROVAL
A	(3) ITEM ADDED. (6) PLUMBING CONFIGURATION CHANGED.	99-08-20	R. A. VOTAW
B	(4) ITEM DELETED. (6) FIND NUMBER CHANGED.		

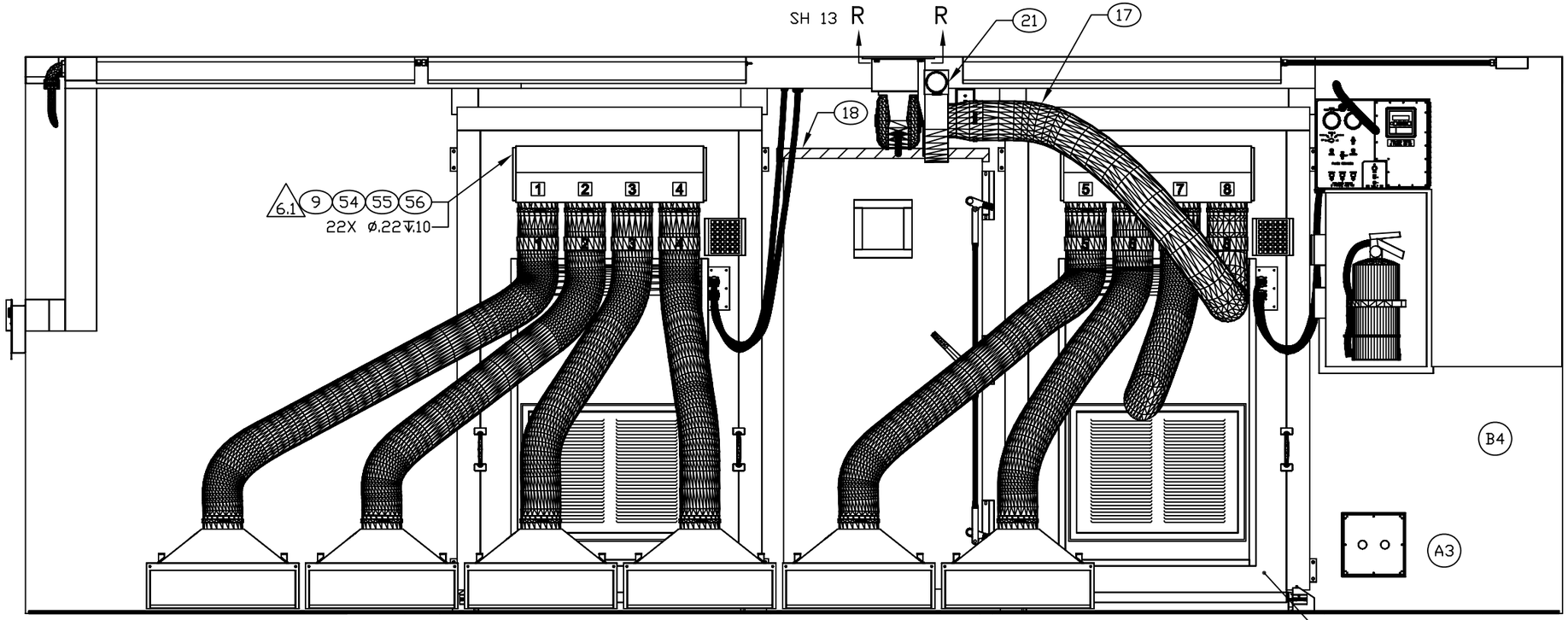

SECTION D–D SH 3

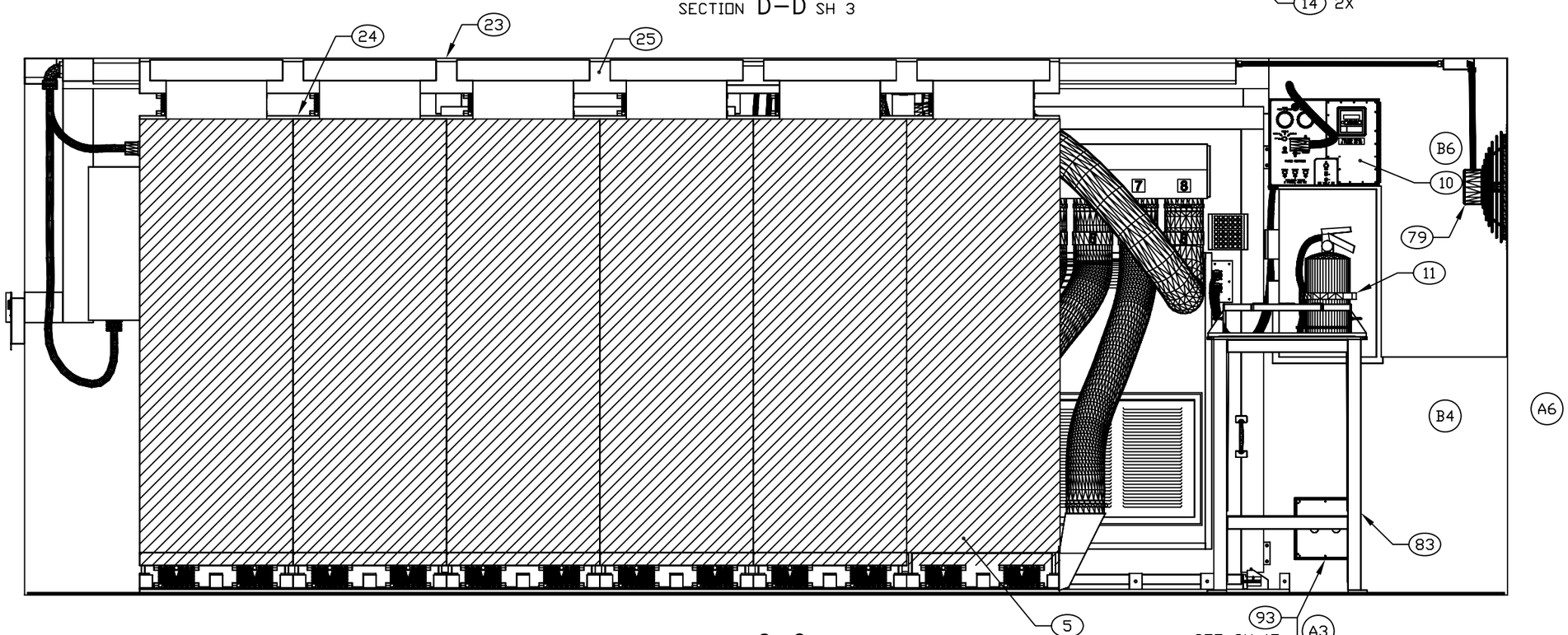

SECTION C–C SH 3

NOTE:

6.1 CENTER UPPER TRANSITION COOLING DUCT OVER CUTOUT. USE UPPER TRANSITION COOLING DUCT AS TEMPLATE TO LOCATE HOLES.

ENGINEER	DATE	DRAWER	DATE	SIZE	CAGE CODE	DRAWING NUMBER	REV
T NGUYEN	99-04	PRV	99-12-09	D	91145	MFKA300101	B
NEXT ASSEMBLY		CHECKER		SCALE		SHEET	
FINAL		MAB	99-05-20	1/10		6	