REVISION HISTORY			
REV	DESCRIPTION	DATE	APPROVAL
A	(3) LIGHTING CONFIGURATION CHANGED.	99-08-12	R. A. VOTAW
B	(2) ITEM DELETED. (4) ITEM ADDED.	99-12-09	R. A. VOTAW

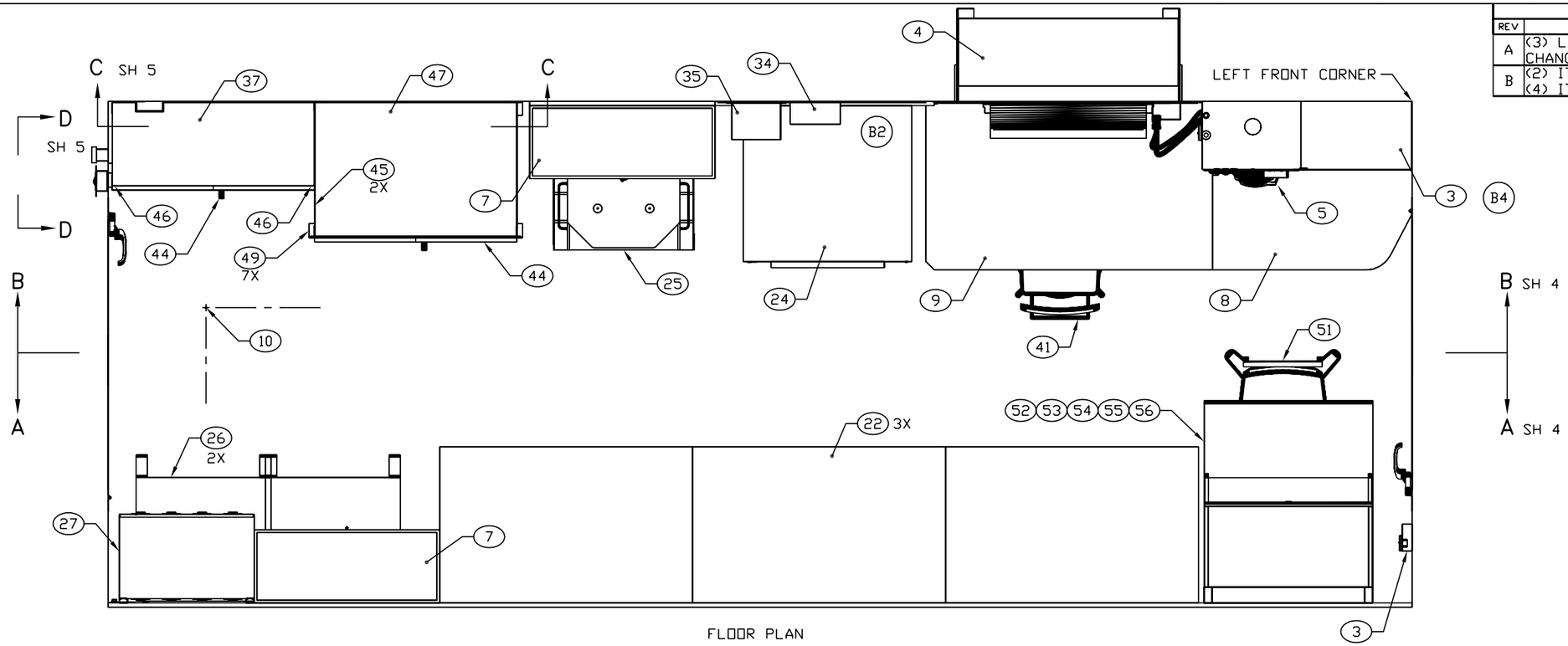

FLOOR PLAN

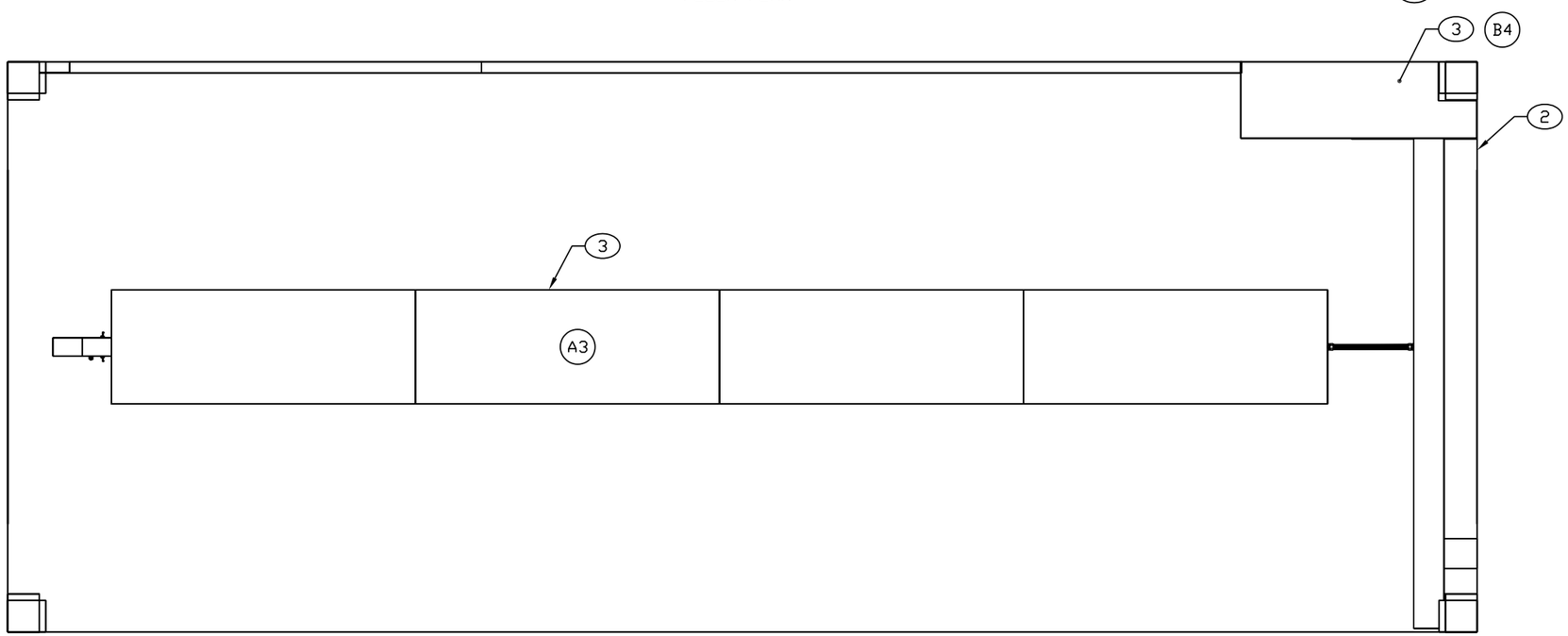

CEILING PLAN

ENGINEER	DATE	DRAWER	DATE	SIZE	CAGE CODE	DRAWING NUMBER	REV
T NGUYEN	99-05	PRV	99-12-07	D	91145	MFKA260101	B
NEXT ASSEMBLY		CHECKER		SCALE		SHEET	
FINAL		MAB	99-06-07	1/11		3	

REVISION HISTORY			
REV	DESCRIPTION	DATE	APPROVAL
A	(4) FIND NO ADDED.	99-08-12	R. A. VOTAW
B	(2) ITEM DELETED. (5) FIND NO CHANGED. (6) NOTE CHANGED.	99-12-09	R. A. VOTAW

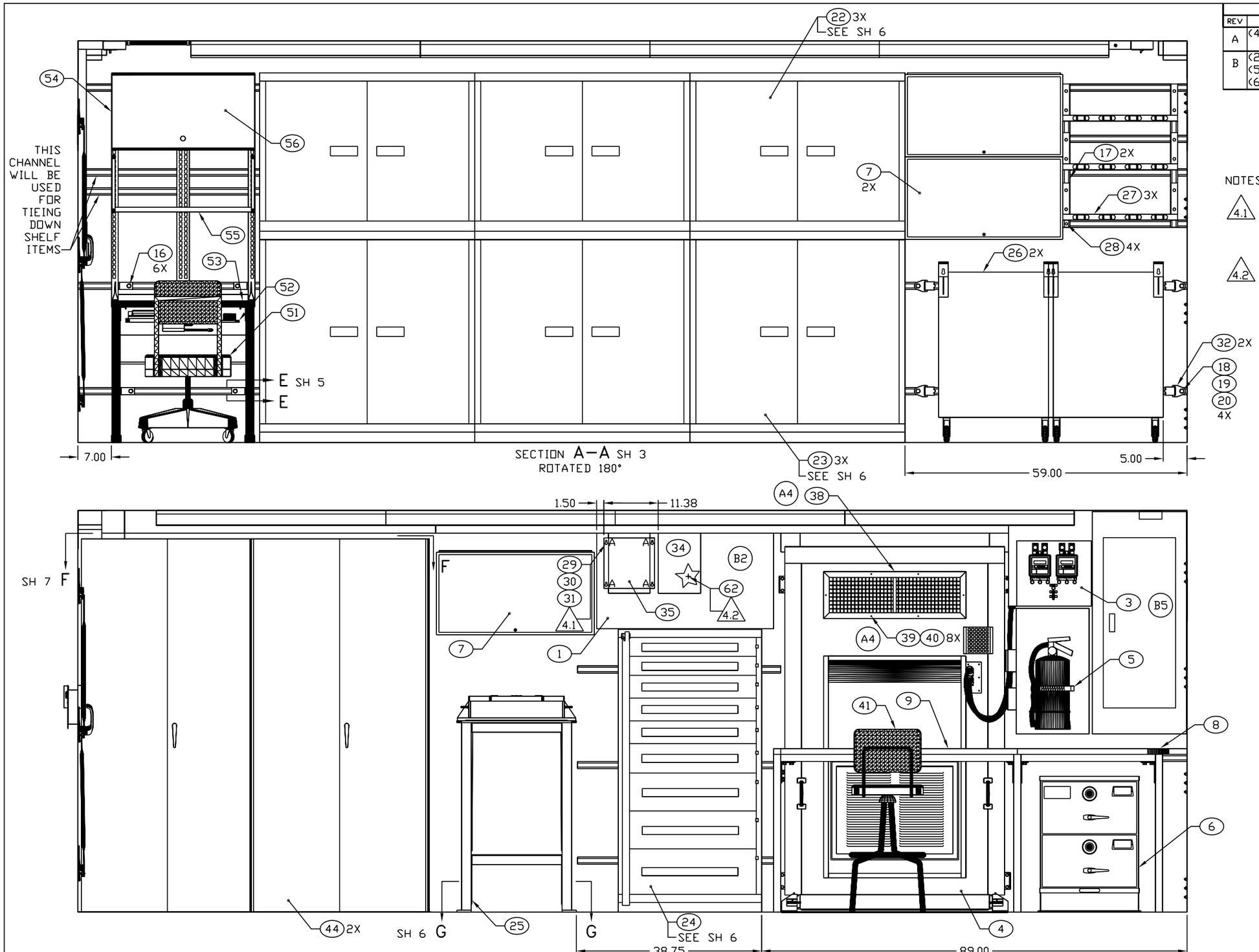

NOTES:

4.1 4X Ø.42, ⌴ Ø.68 ↧ .08 INDICATED A. USE TRANSFORMER, FIND NO 35, AS TEMPLATE. B6

4.2 4X Ø.261 ↧ .40. USE LOAD CENTER PANEL AS TEMPLATE.

ENGINEER	DATE	DRAWER	DATE	SIZE	CAGE CODE	DRAWING NUMBER	REV
T NGUYEN	99-05	PRV	99-12-07	D	91145	MFKA260101	B
NEXT ASSEMBLY		CHECKER		SCALE		SHEET	
FINAL		MAB	99-06-07	1/10		4	