REVISION HISTORY			
REV	DESCRIPTION	DATE	APPROVAL
D	FIND NUMBER DELETED. FIND NUMBER CHANGED.	96-12-19	R. VOTAW
E	(2) ITEM DELETED. (3) ITEM ADDED.	97-08-27	L. BJURMAN
F	(1) ITEM DELETED. (5) ITEM ADDED.	98-04-24	R. VOTAW

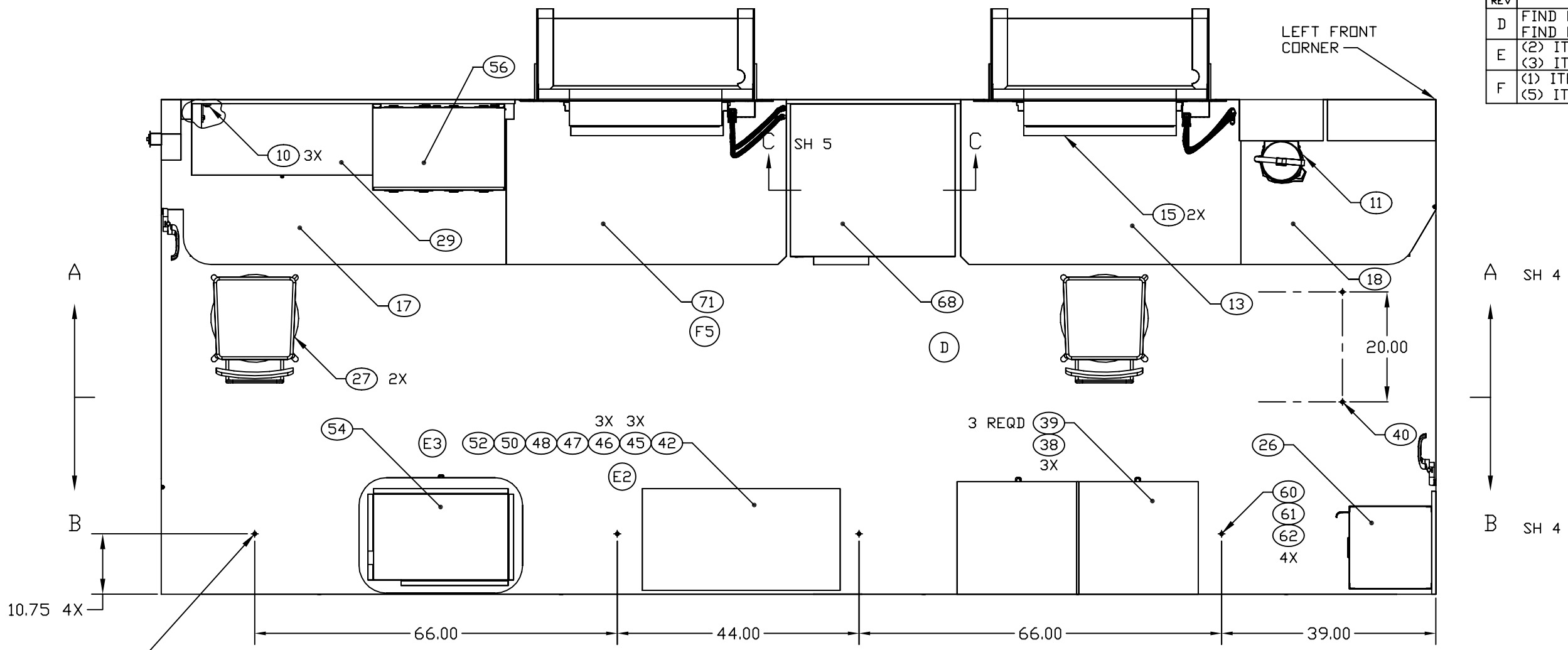

FLOOR PLAN

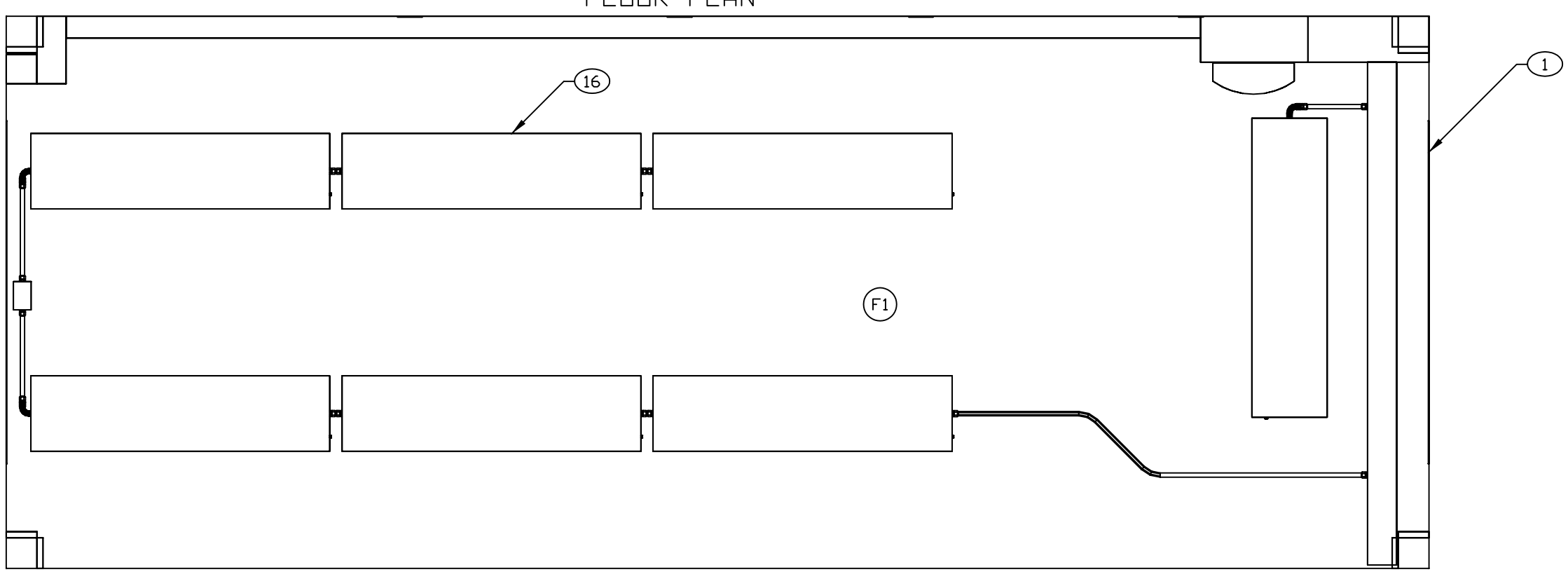

CEILING PLAN

ENGINEER	DATE	DRAWER	DATE	SIZE	CAGE CODE	DRAWING NUMBER	REV
P. VICENCIO	95-11-07	PRV	98-04-18	D	91145	MFKA050201	F
NEXT ASSEMBLY		CHECKER		SCALE		SHEET	
FINAL		MAB	95-12-14	1/11		3	

REVISION HISTORY			
REV	DESCRIPTION	DATE	APPROVAL
D	FIND NUMBER DELETED. FIND NUMBER CHANGED.	96-12-19	R. VOTAW
E	(2) ITEM DELETED. (3) ITEM ADDED.	97-08-27	L. BJURMAN
F	(5) ITEM ADDED. (7) DIMENSION ADDED.	98-04-24	R. VOTAW
G	REVISED AND PARTIALLY REDRAWN BY P. VICENCIO. (1) ITEM DELETED.	06-03-01	R. VOTAW

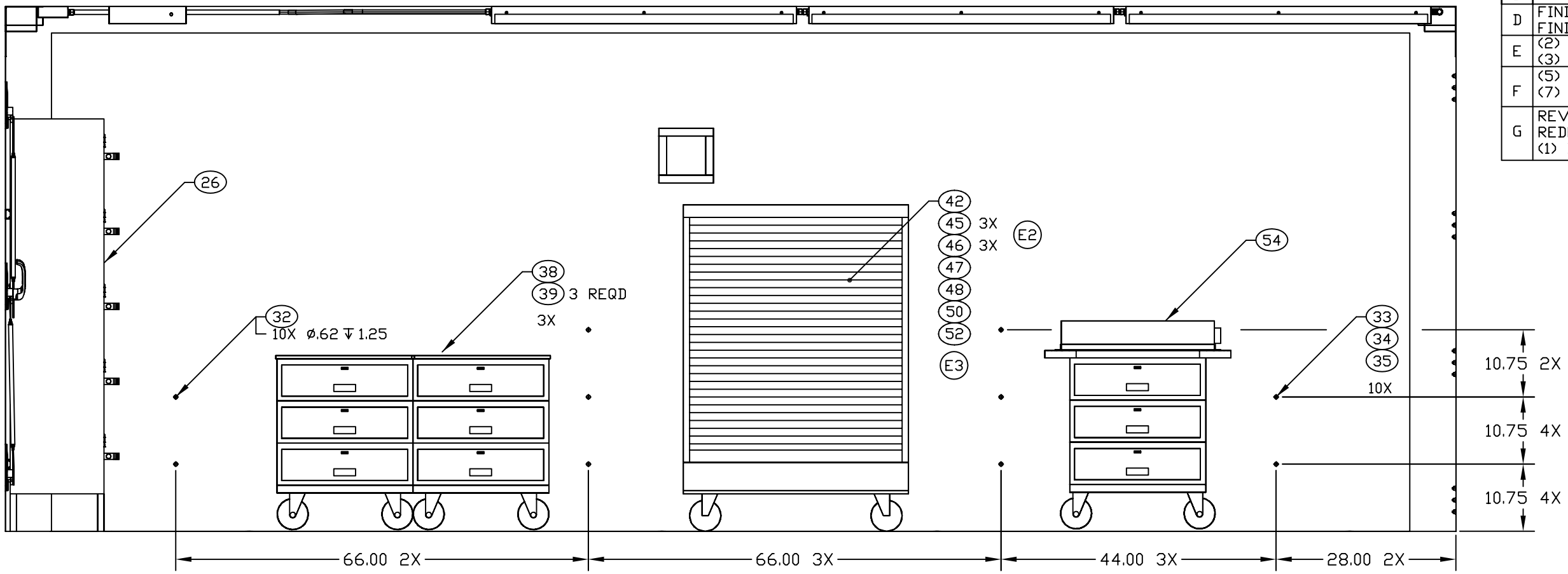

SECTION B-B SH 3

ROTATED 180°

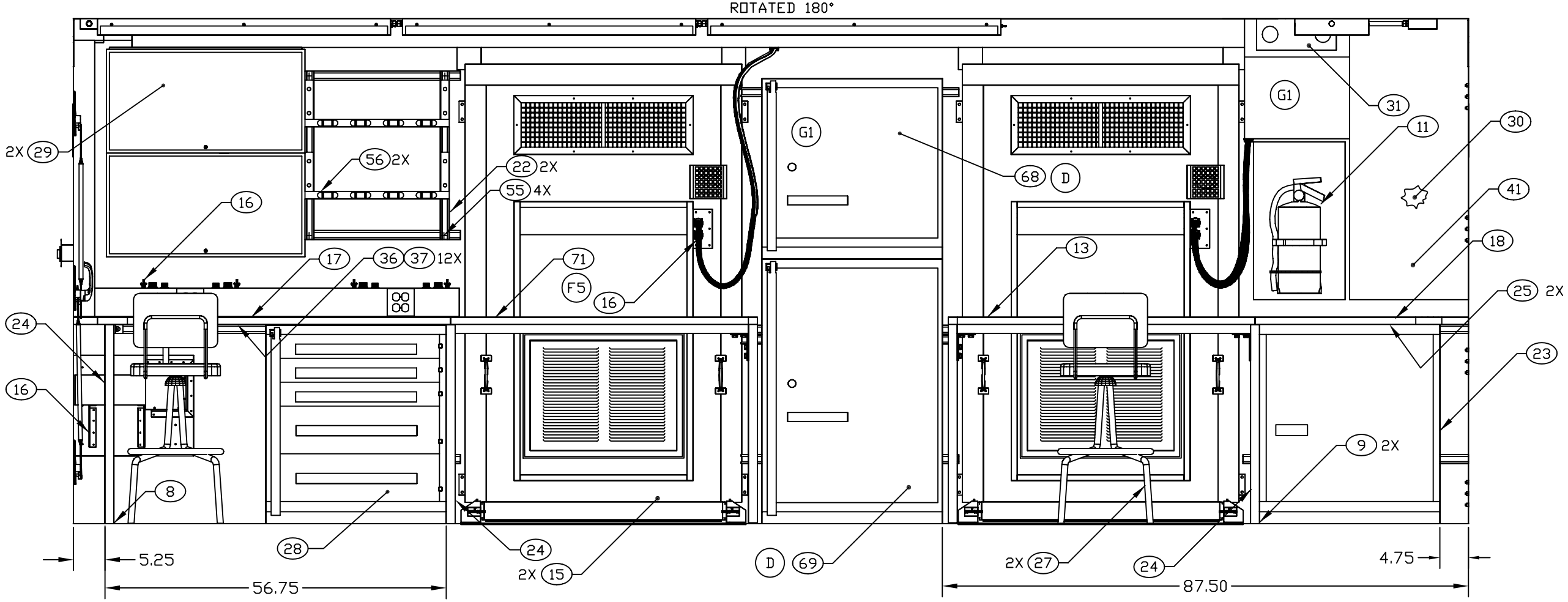

SECTION A-A SH 3

ENGINEER	DATE	DRAWER	DATE	SIZE	CAGE CODE	DRAWING NUMBER	REV
P. VICENCIO	95-11-05	PRV	98-04-18	D	91145	MFKA050201	G
NEXT ASSEMBLY		CHECKER		SCALE		SHEET	
FINAL		MAB	95-12-14	1/10		4	