REVISION HISTORY			
REV	DESCRIPTION	DATE	APPROVAL

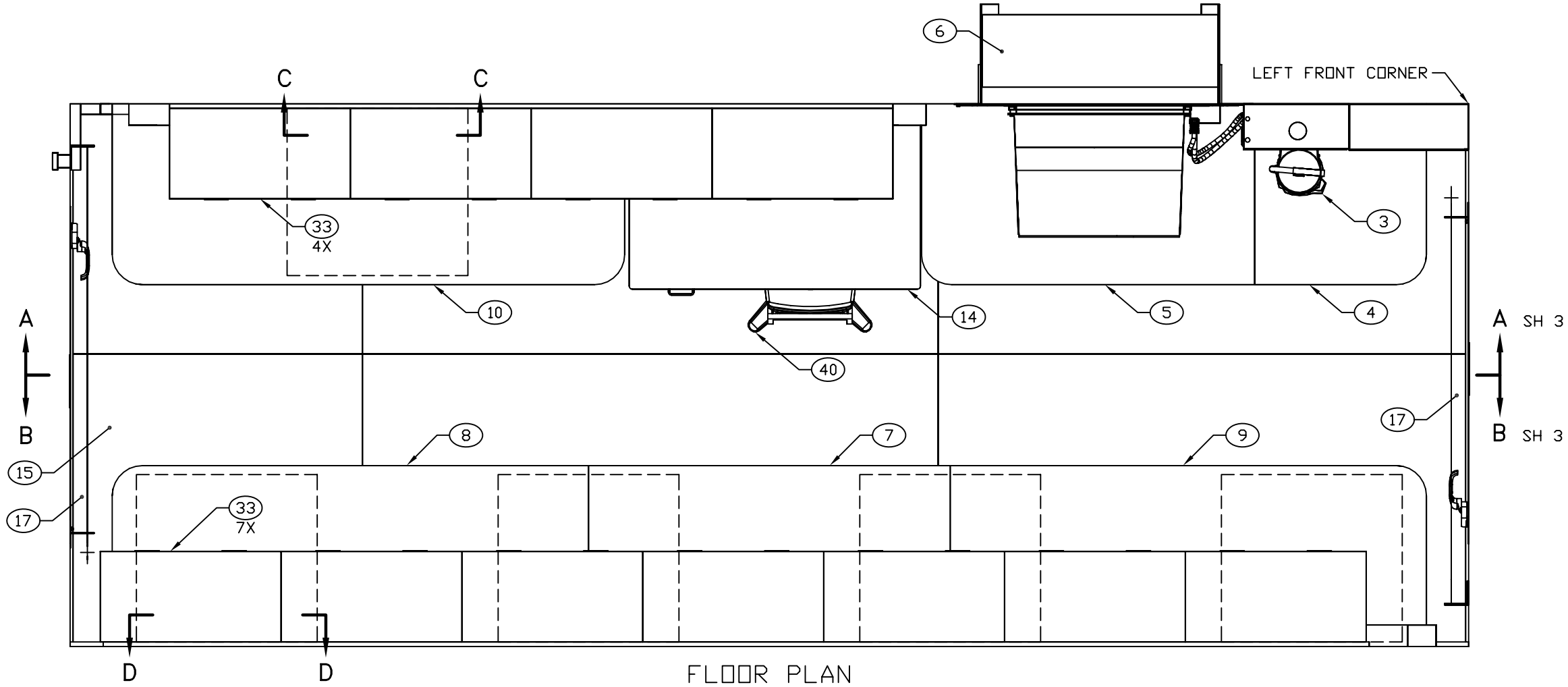

FLOOR PLAN

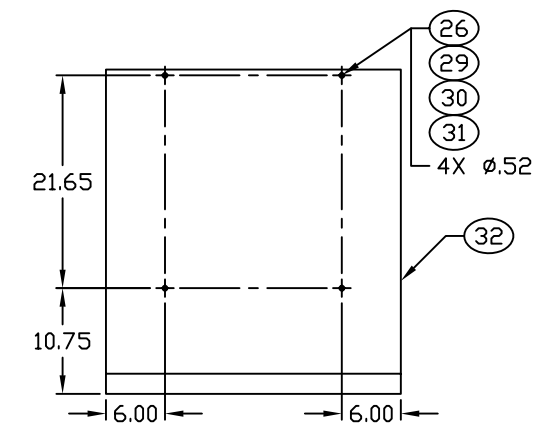

4X SECTION D–D
ROTATED 180°
SECTION C–C
SCALE 1/10
FLOOR CABINET
INSTALLATION

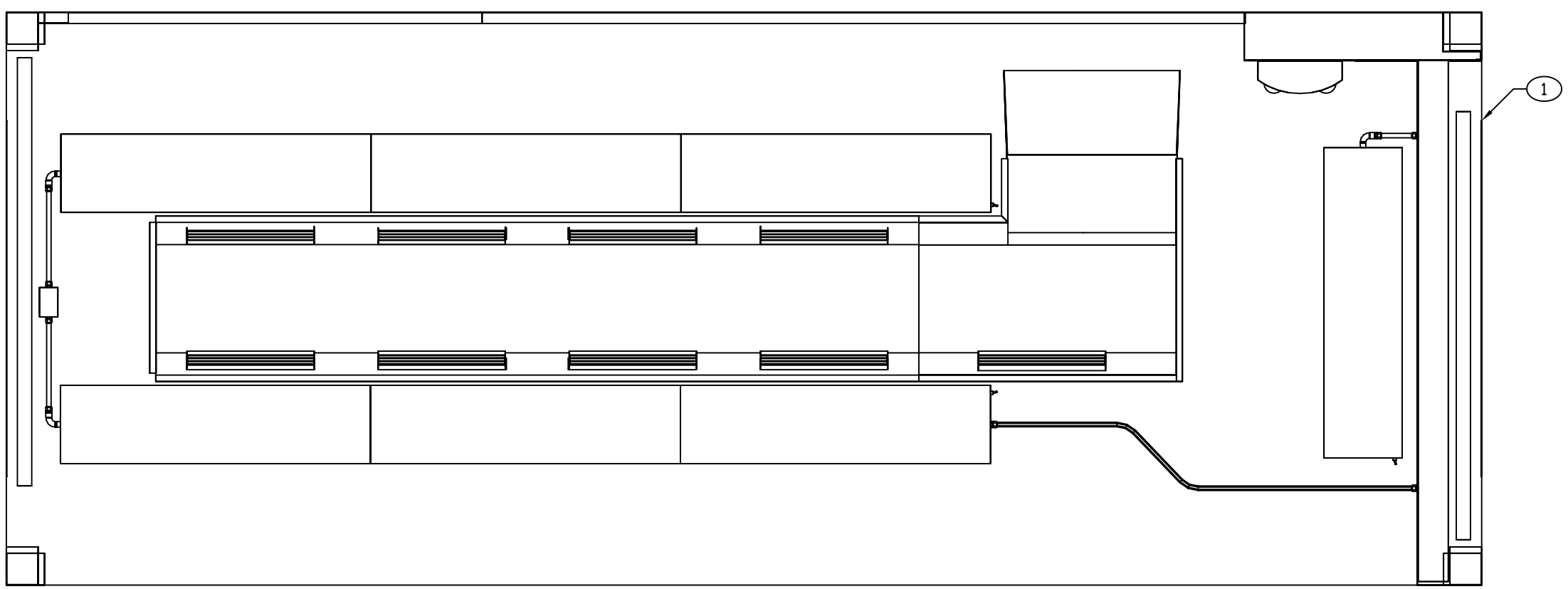

CEILING PLAN

ENGINEER	DATE	DRAWER	DATE	SIZE	CAGE CODE	DRAWING NUMBER	REV
M BEUSTER	2005-07-19	MAB	2005-07-19	D	91145	MFEE020101	–
NEXT ASSEMBLY		CHECKER		SCALE		SHEET	
FINAL		TN	2005-07-20	1/11		2	

REVISION HISTORY			
REV	DESCRIPTION	DATE	APPROVAL

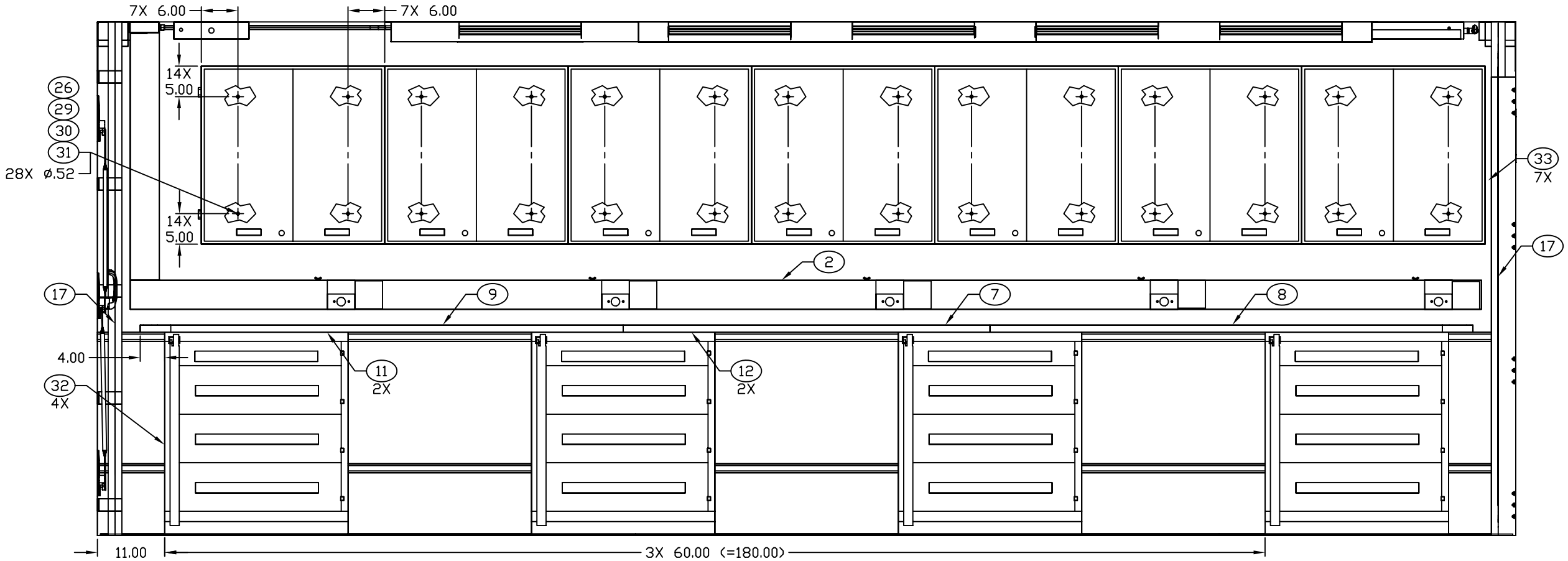

SECTION B–B SH 2
ROTATED 180°

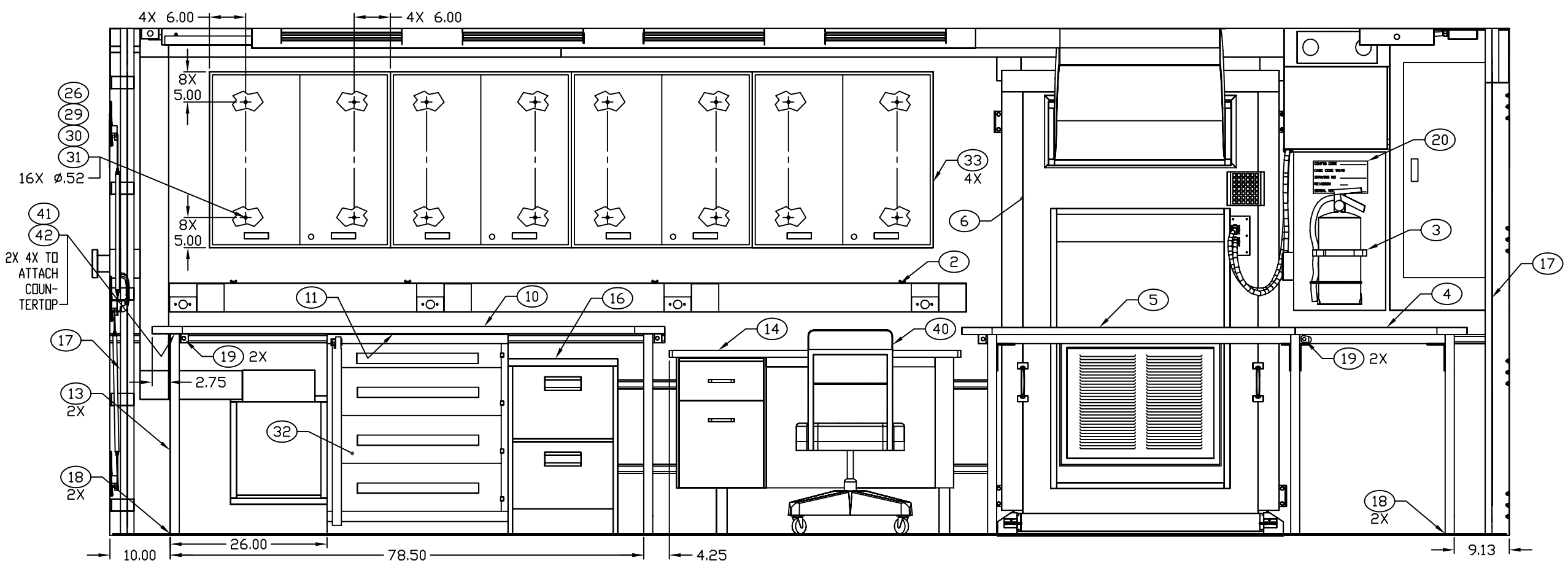

SECTION A–A SH 2

ENGINEER	DATE	DRAWER	DATE	SIZE	CAGE CODE	DRAWING NUMBER	REV
M BEUSTER	2005-07-19	MAB	2005-07-19	D	91145	MFEE020101	–
NEXT ASSEMBLY		CHECKER		SCALE		SHEET	
FINAL		TN	2005-07-20	1/10		3	