REVISIONS			
REV	DESCRIPTION	DATE	APPROVAL

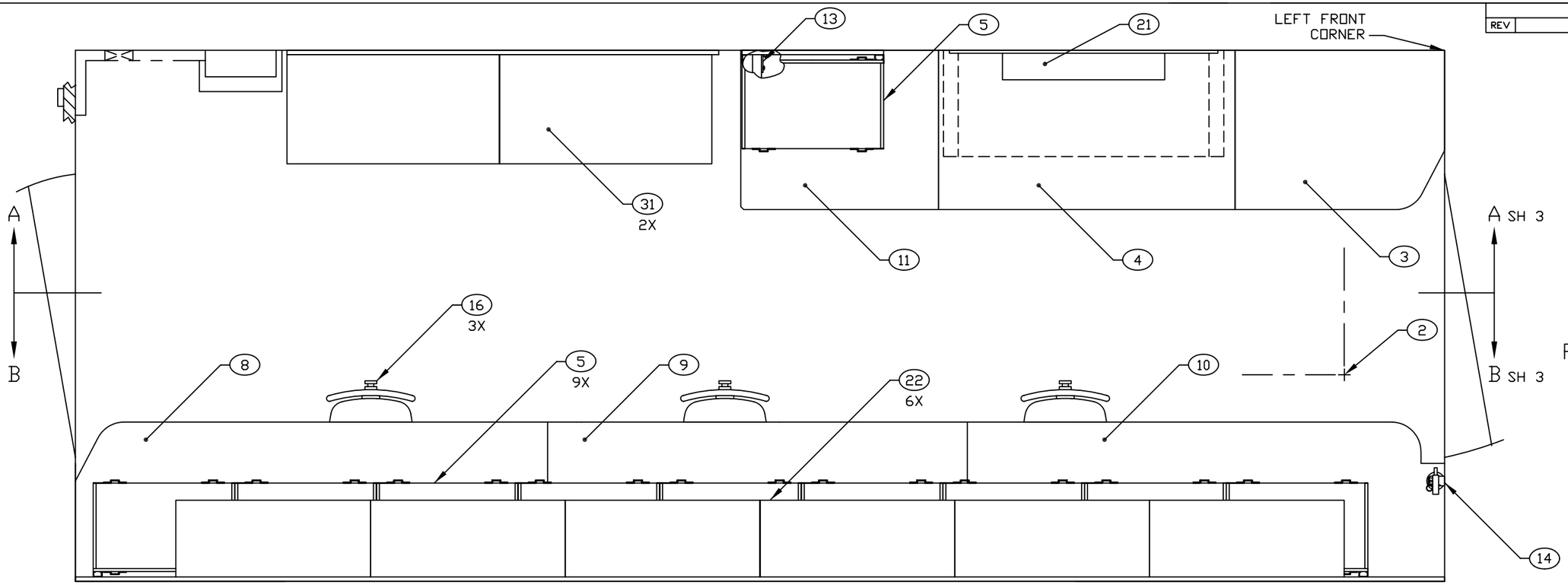

FLOOR PLAN

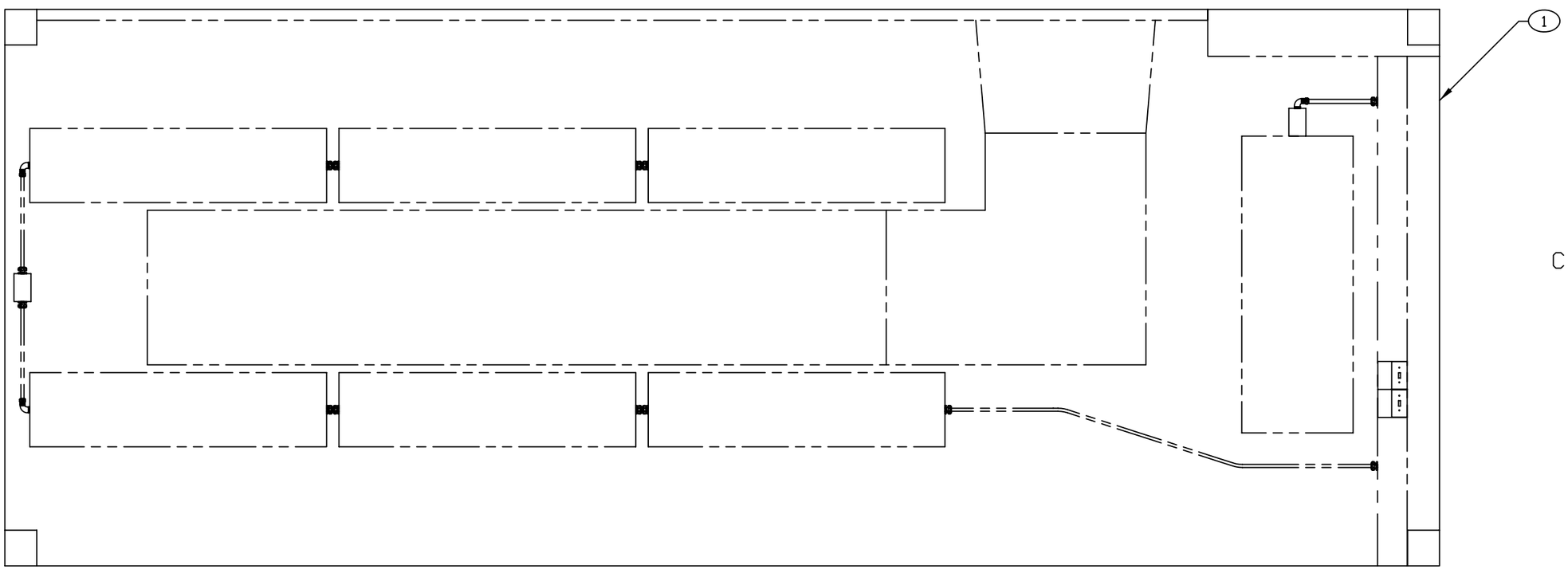

CEILING PLAN

ENGINEER	DATE	DRAWN BY	DATE	SIZE	CAGE CODE	DWG NO	REV
P. VICENCIO	93-09-24	P. VICENCIO	93-09-24	D	91145	MFEB250101	–
NEXT ASSEMBLY FINAL		CHECKER		SCALE 1/10		SH 2	

MFEB250101C.DWG

REVISIONS			
REV	DESCRIPTION	DATE	APPROVAL
C	FIND NUMBER CHANGED.		

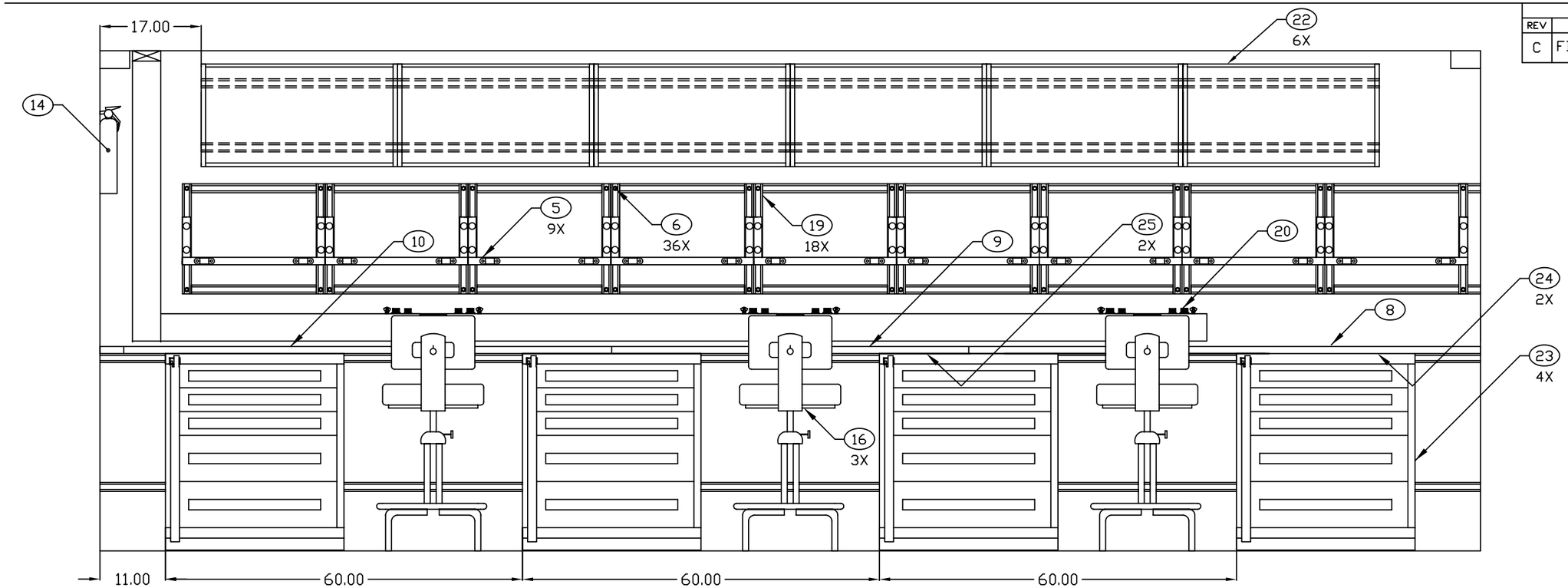

SECTION B-B SH 2
ROTATED 180°

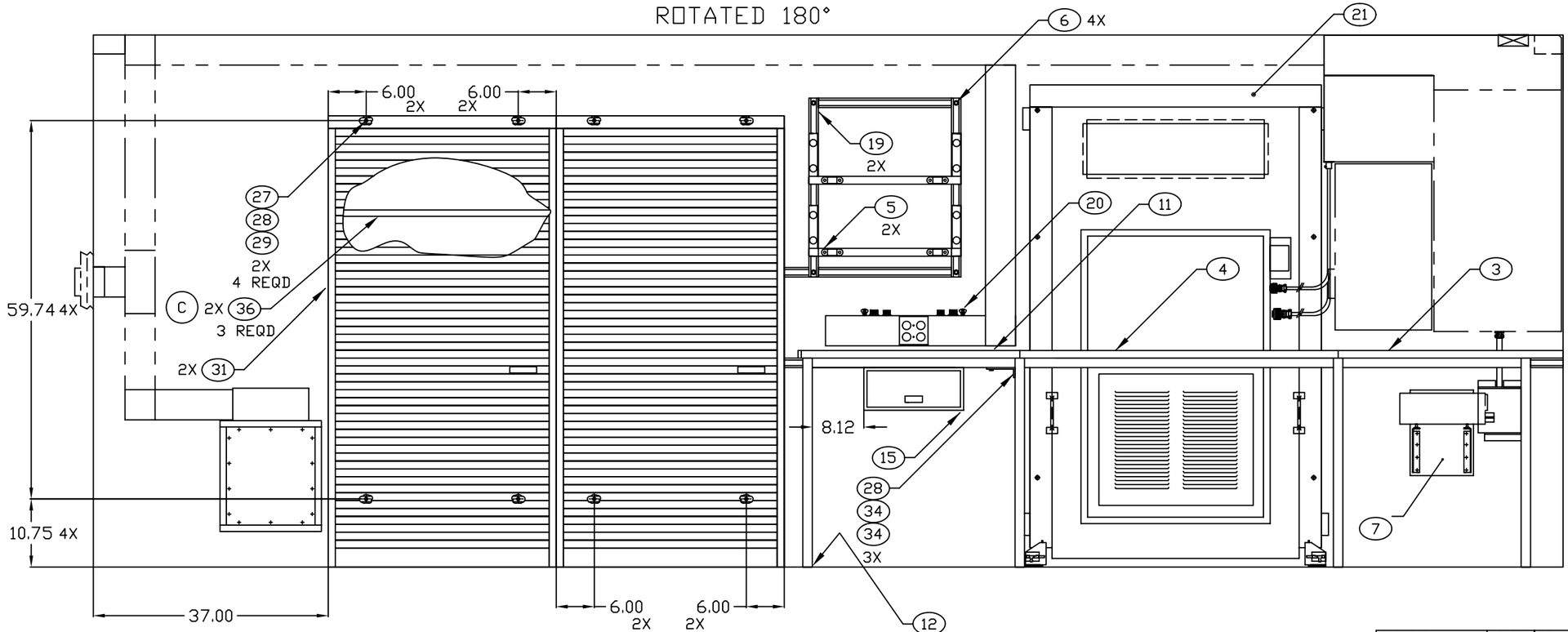

SECTION A-A SH 2

MFEB250101C.DWG

ENGINEER	DATE	DRAWN BY	DATE	SIZE	CAGE CODE	DWG NO	REV
P. VICENCIO	93-09-22	EEM	99-03-05	D	91145	MFEB250101	C
NEXT ASSEMBLY		CHECKER		SCALE	1/10	SH 3	
FINAL		MAB	93-10				