REVISIONS			
REV	DESCRIPTION	DATE	APPROVAL
B	REDRAWN WITH CHANGES.	95-04-05	A. TUNGCAB
C	FIRE EXTINGUISHER MOVED.		

NOTE:

2.1 DETERMINE DIMENSION DURING INSTALLATION.

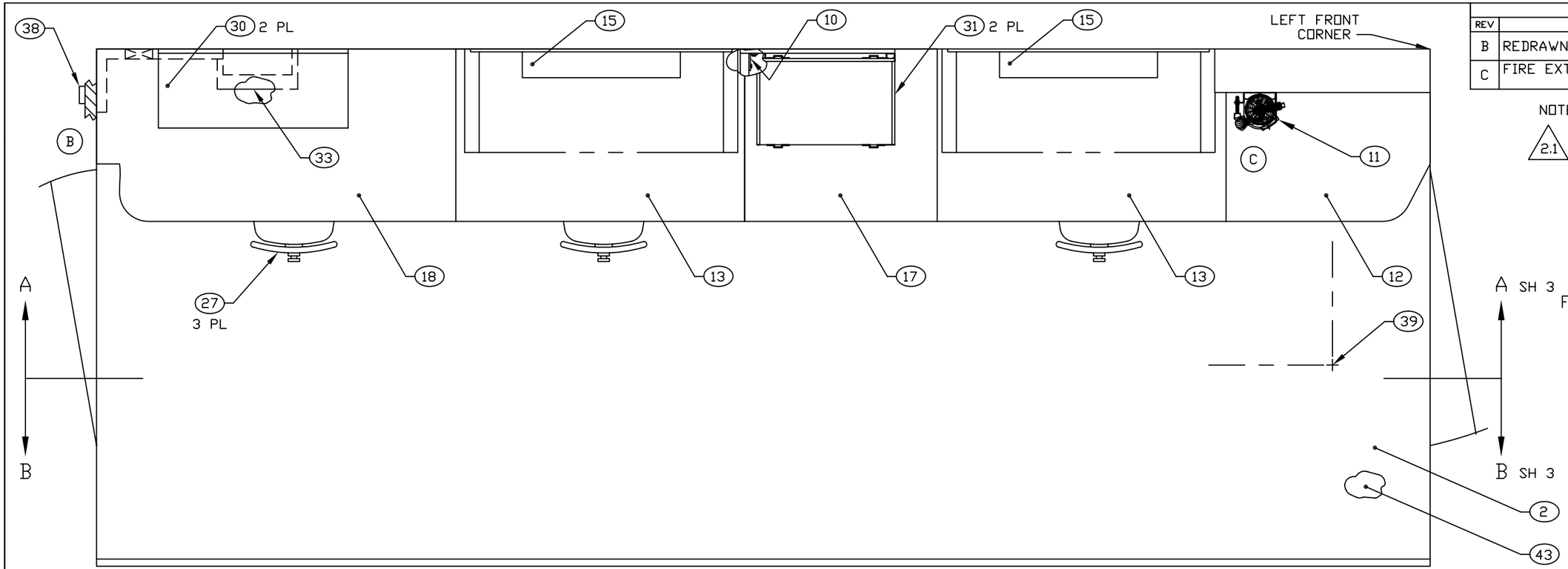

FLOOR PLAN

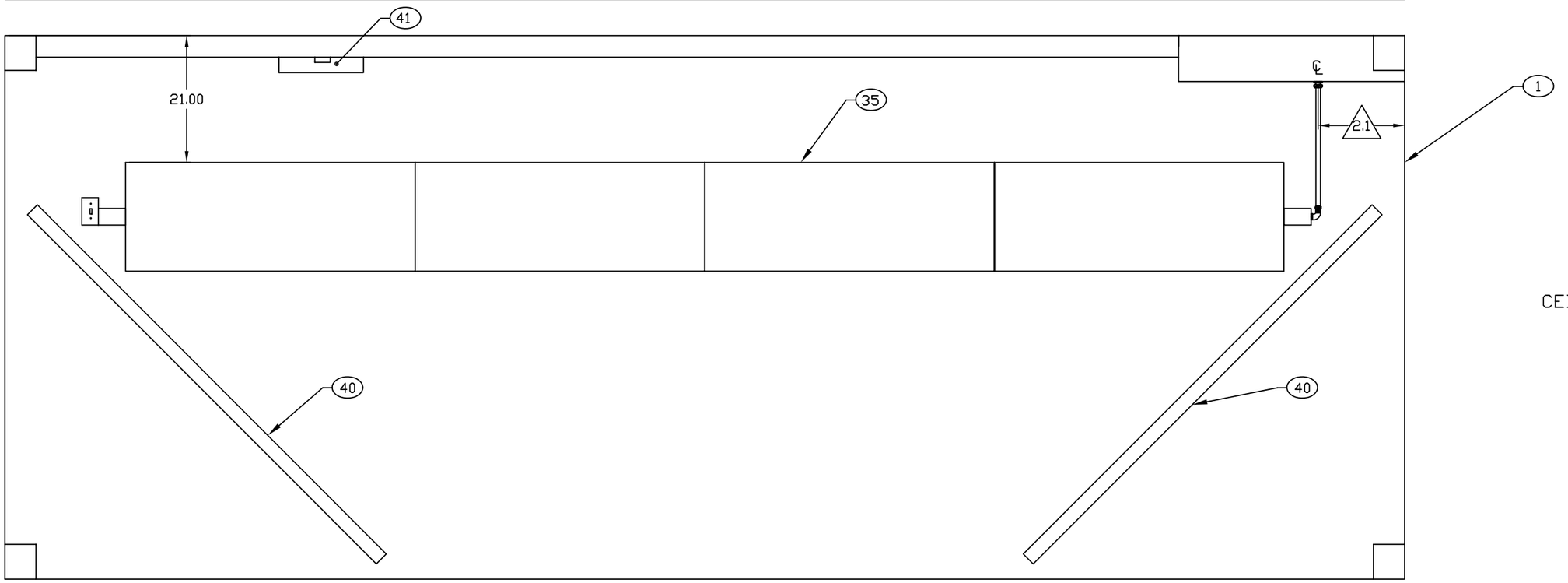

CEILING PLAN

ENGINEER	DATE	DRAWN BY	DATE	SIZE	CAGE CODE	DWG NO	REV
P. VICENCIO	94-07-21	P. VICENCIO	97-06-11	D	91145	MFEB190101	C
NEXT ASSEMBLY FINAL		CHECKER MAB	94-07	SCALE 1/10		SH 2	

REVISIONS			
REV	DESCRIPTION	DATE	APPROVAL
C	FIRE EXTINGUISHER MOVED.		

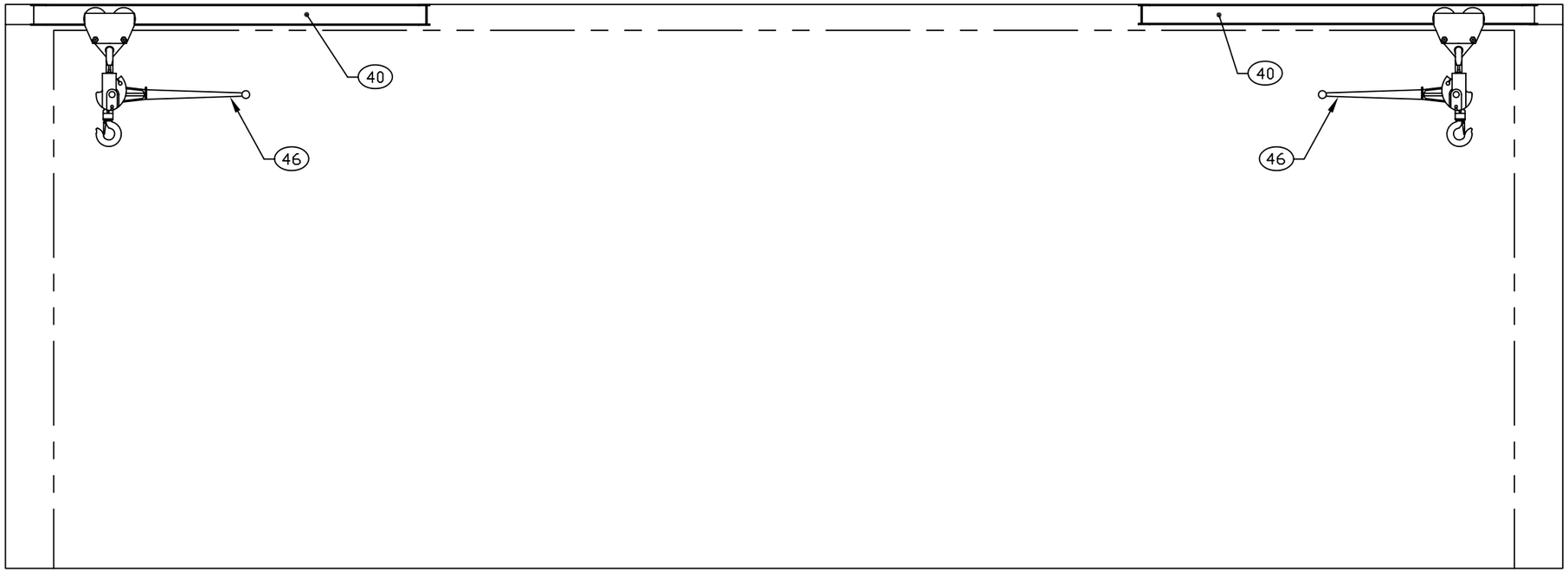

SECTION B-B
ROTATED 180°
SHEET 2

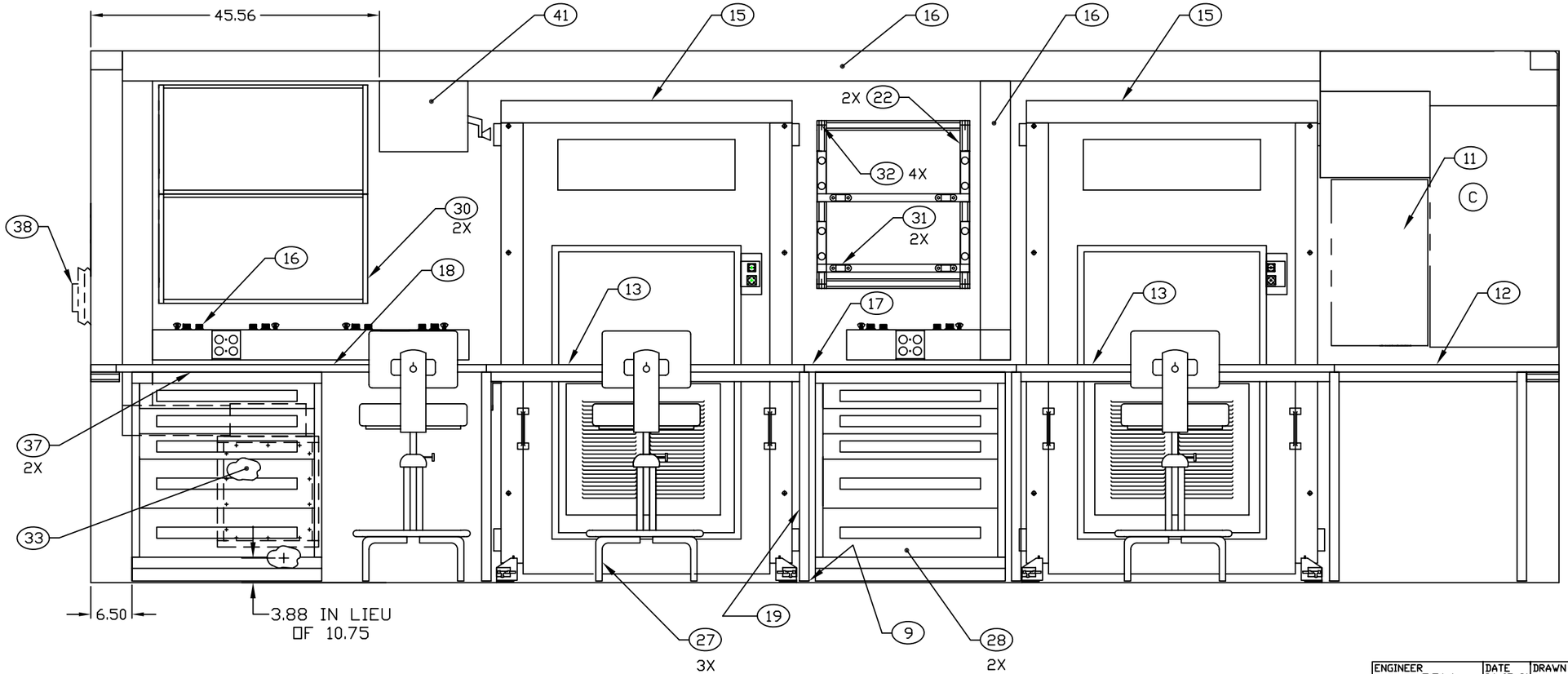

SECTION A-A
SHEET 2

ENGINEER	DATE	DRAWN BY	DATE	SIZE	CAGE CODE	DWG NO	REV
PRV	94-07-21	PRV	97-06-11	D	91145	MFEB190101	C
NEXT ASSEMBLY		CHECKER		SCALE		SH	
FINAL		MAB	94-07	1/10		3	