REVISION HISTORY			
REV	DESCRIPTION	DATE	APPROVAL
A	REDRAWN WITH CHANGES.		

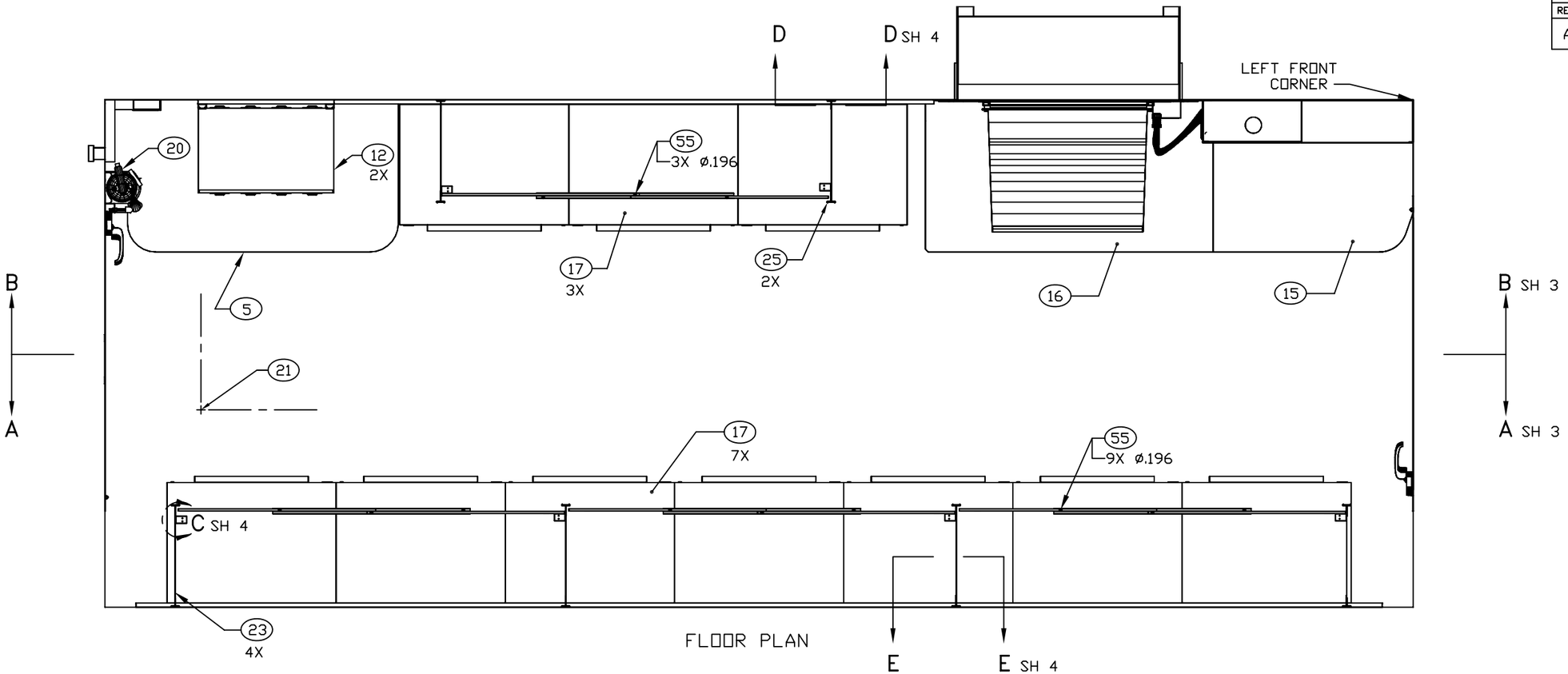

FLOOR PLAN

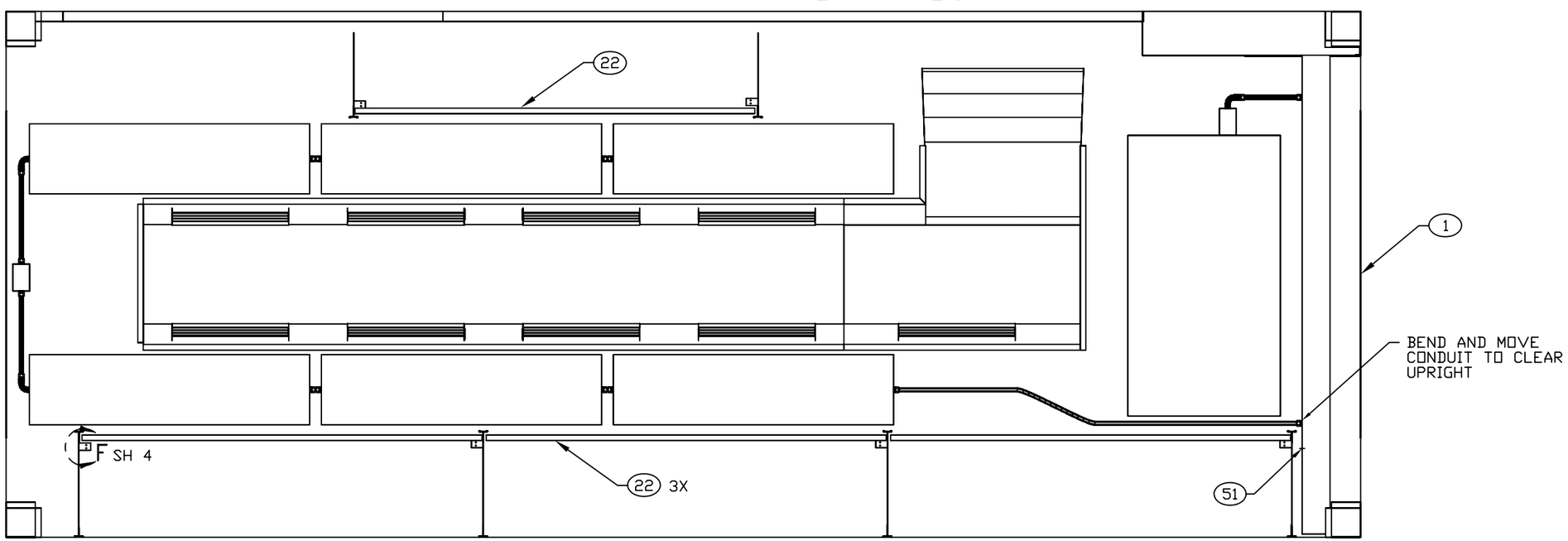

CEILING PLAN

ENGINEER	DATE	DRAWER	DATE	SIZE	CAGE CODE	DRAWING NUMBER	REV
J. ALLEN	89-12-08	MAB	96-04-17	D	91145	MFEB130101	A
NEXT ASSEMBLY FINAL		CHECKER MAB	89-12-13	SCALE 1/11		SHEET 2	

REVISION HISTORY			
REV	DESCRIPTION	DATE	APPROVAL
A	REDRAWN WITH CHANGES.		

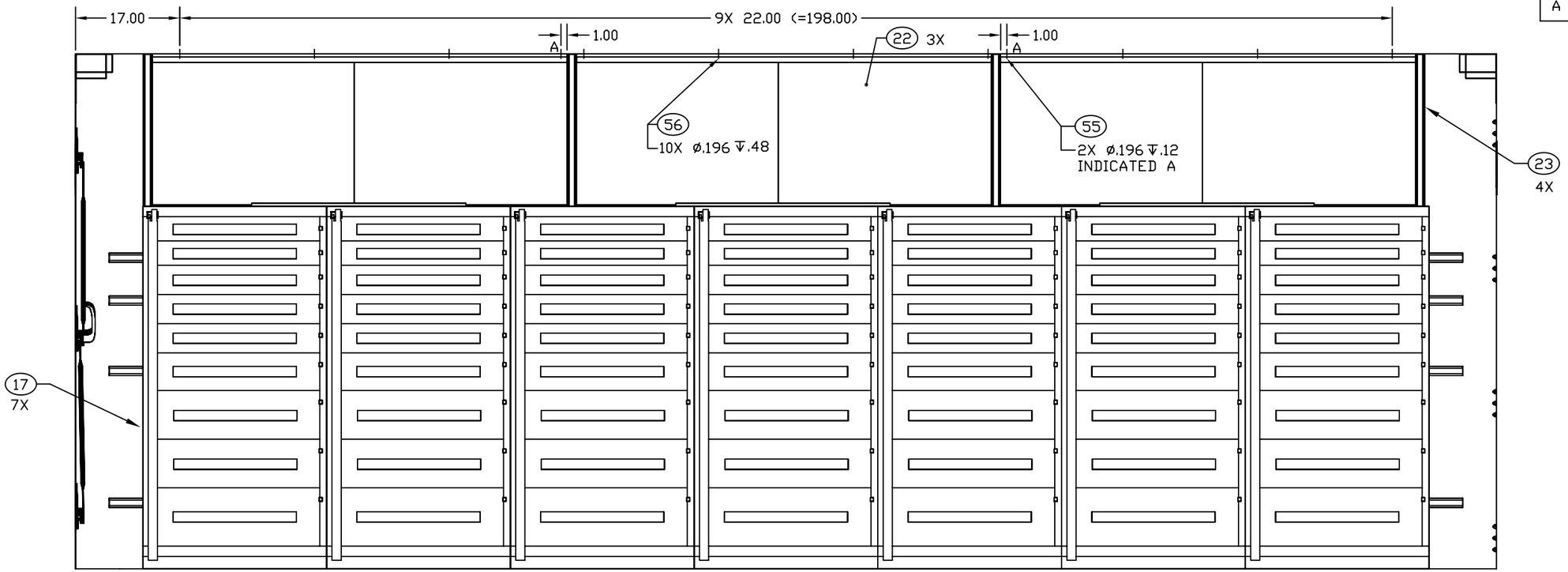

SECTION A–A SH 2
ROTATED 180°

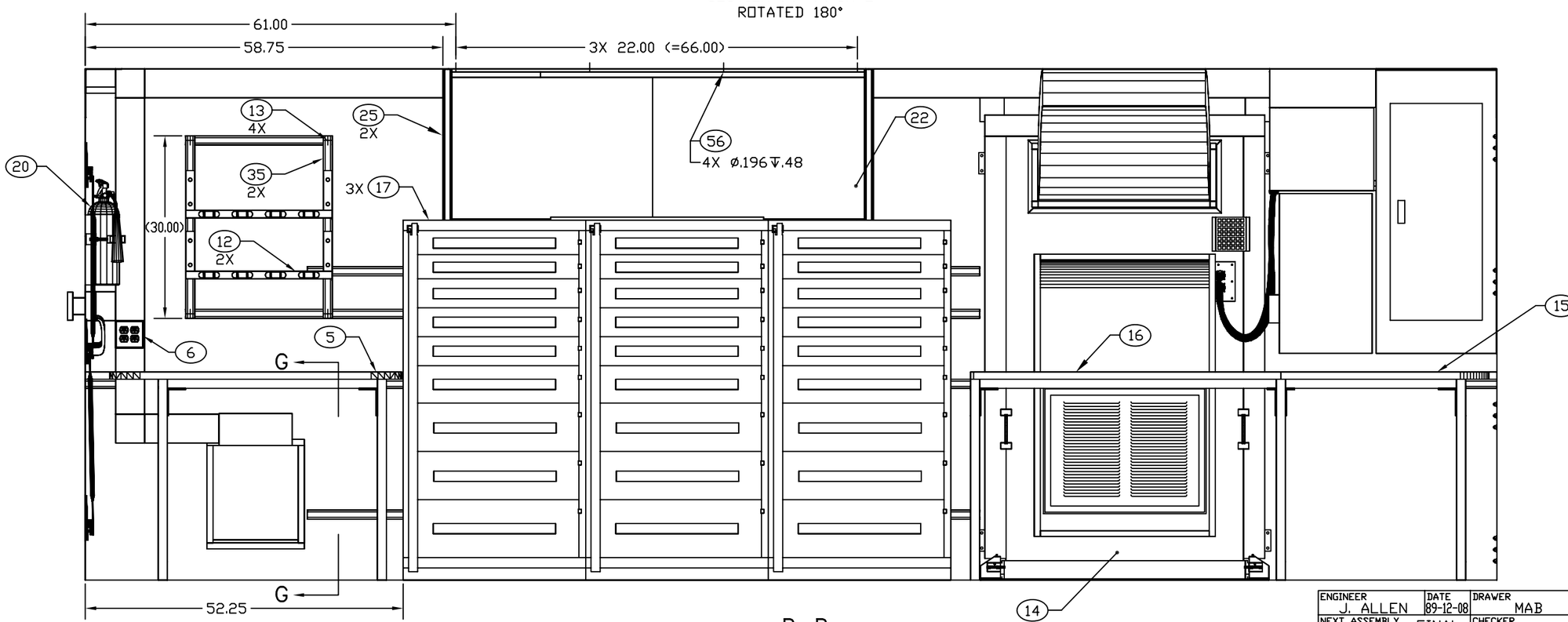

SECTION B–B SH 2

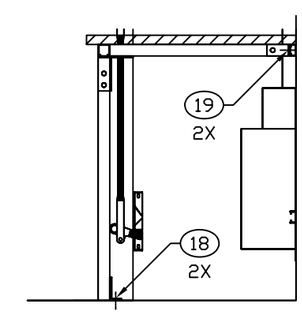

SECTION G–G

ENGINEER	DATE	DRAWER	DATE	SIZE	CAGE CODE	DRAWING NUMBER	REV
J. ALLEN	89-12-08	MAB	96-04-17	D	91145	MFEB130101	A
NEXT ASSEMBLY	FINAL	CHECKER MAB	89-12-13	SCALE 1/10		SHEET 3	