REVISION HISTORY			
REV	DESCRIPTION	DATE	APPROVAL
G	REVISED AND PARTIALLY REDRAWN BY M. BEUSTER. (1) FILING CABINET MOVED.	05-03-25	R A VOTAW

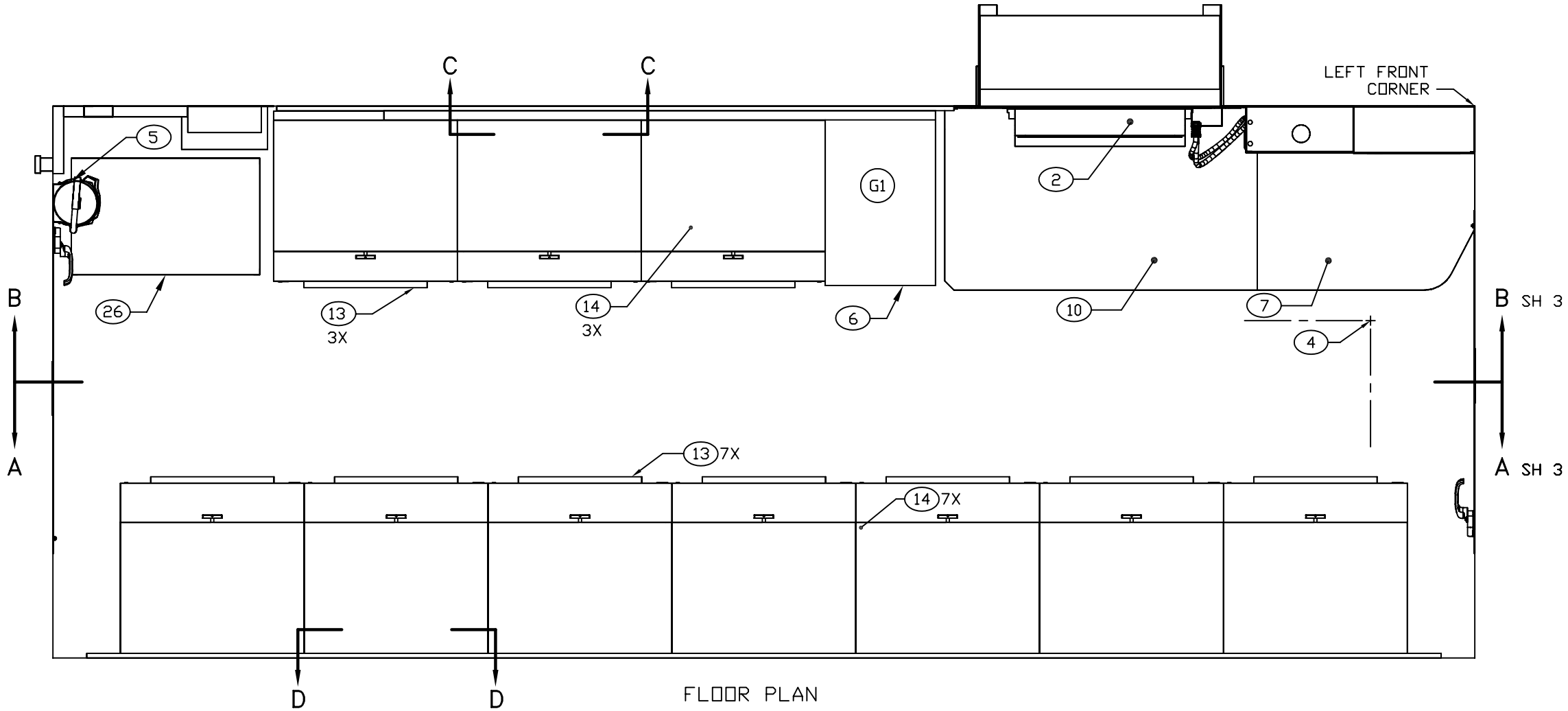

FLOOR PLAN

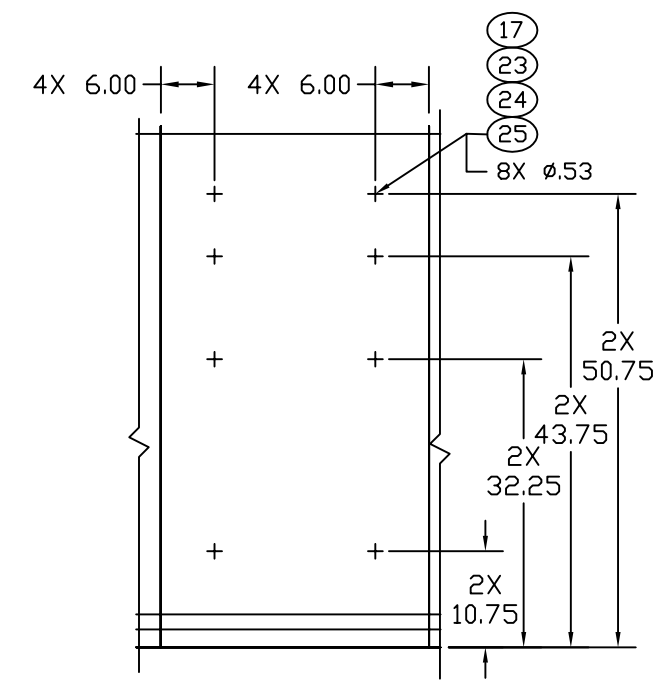

3X SECTION C–C
7X SECTION D–D
ROTATED 180°

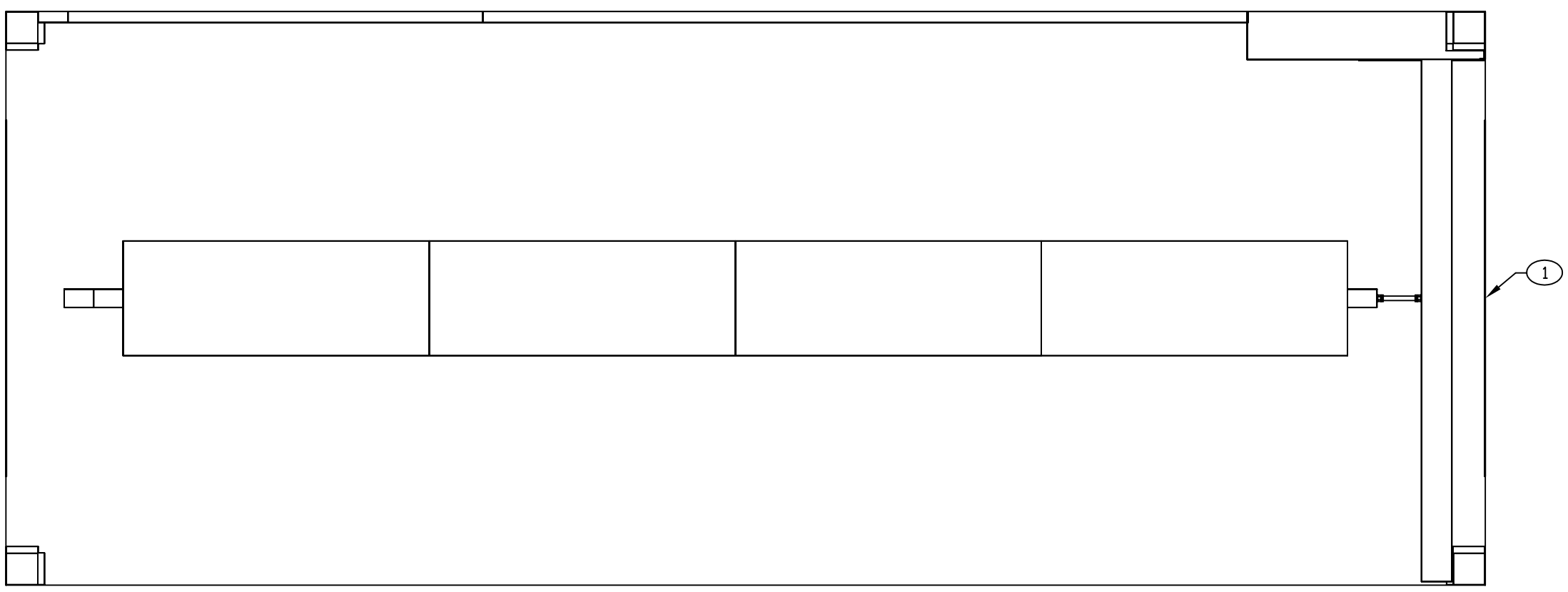

CEILING PLAN

ENGINEER	DATE	DRAWN BY	DATE	SIZE	CAGE CODE	DWG NO	REV
BEUSTER	87-09-18	MAB	97-05-08	D	91145	MFTL010401	G
NEXT ASSEMBLY FINAL		CHECKER JONES	87-09-25	SCALE 1/11		SH 2	

REVISION HISTORY			
REV	DESCRIPTION	DATE	APPROVAL
G	REVISED AND PARTIALLY REDRAWN BY M. BEUSTER. (1) FILING CABINET MOVED.	05-03-25	R A VOTAW

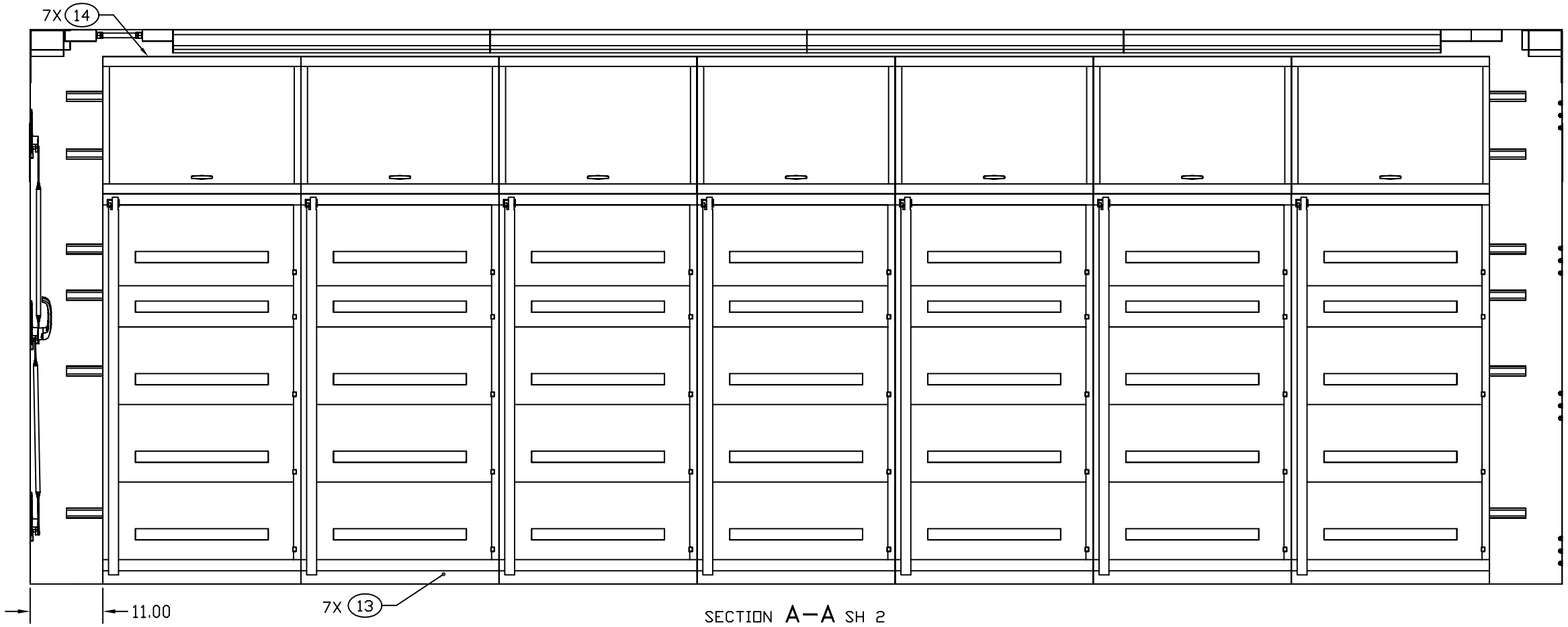

SECTION A–A SH 2
ROTATED 180°

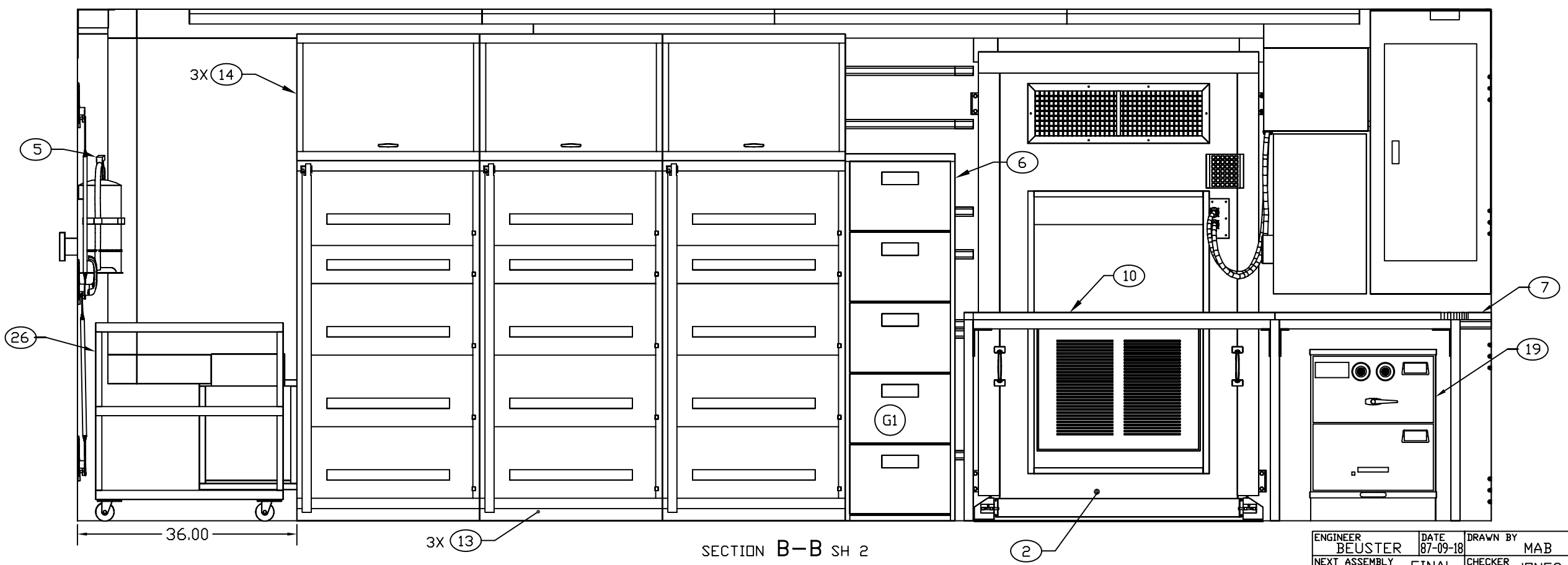

SECTION B–B SH 2

ENGINEER	DATE	DRAWN BY	DATE	SIZE	CAGE CODE	DWG NO	REV
BEUSTER	87-09-18	MAB	97-05-08	D	91145	MFTL010401	G
NEXT ASSEMBLY	FINAL	CHECKER	JONES	87-09-25	SCALE 1/10	SH 3	